Tino Villarreal, Commissioner At-large "A"
Bryan L. Martinez, Commissioner District 1
Gustavo De Leon, Commissioner District 3

Nurith Galonsky, Commissioner At-large "B"
Linda C. Macias, Commissioner District 2
Pedro E. Cardenas, Commissioner District 4

John Cowen, Jr, Mayor

NOTICE OF A PUBLIC MEETING OF THE
CITY COMMISSION OF THE CITY OF BROWNSVILLE

Pursuant to Chapter 551, Title 5 of the Texas Government Code, the Texas Open Meetings Act, notice is hereby given that the City Commission of the City of Brownsville, Texas, in accordance with Article V, Section 12, of the Charter of said City, will convene a **Regular Meeting**, on **July 21, 2026**, at **5:00 PM**, in the Commission Chambers, on the Second Floor of the Brownsville City Hall - Old Federal Building, located at 1001 East Elizabeth Street, Brownsville, Cameron County, Texas, 78520.

Pursuant to Section 551.127, Texas Government Code, one or more Commissioners or employees may attend this meeting remotely using videoconferencing technology. The video and audio feed of the videoconferencing equipment can be viewed and heard by the public at the address posted above as the location of the meeting. Members of the public, employees, and the City Commission may join via the Webex Teleconference Meeting by logging on at:

https://brownsvilletx.webex.com/brownsvilletx/j.php?MTID=mb0f8d1240d8f166059ae34c036f78f88

Meeting number: 2532 697 4533

Password: commission (26664774 when dialing from a video system)

Join by video system

Dial 25326974533@brownsvilletx.webex.com

You can also dial 173.243.2.68 and enter your meeting number.

Join by phone

1-844-621-3956 United States Toll Free

+1-650-479-3208 United States Toll

Access code: 253 269 74533

This Notice and Meeting Agenda are posted online at: https://brownsvilletx.gov/129/Agendas-Minutes Members of the public who submitted a "Public Comment Form" will be permitted to offer public comments as provided by the agenda and as permitted by the presiding officer during the meeting. A recording of the meeting will be made and will be available to the public in accordance with the Open Meetings Act. At any time during the course of the posted meeting, the Brownsville City Commission may retire into Executive Session under Texas Government Code 551.071 to confer with legal counsel on any subject matter on this agenda in which the duty of the attorney to the City Commission under Texas Disciplinary Rules of Professional Conduct of the State Bar of Texas clearly conflicts with Chapter 551 of the Texas Government Code. Further, at any time during this meeting, the City Commission may retire to deliberate on any subject slated for discussion at this meeting, as may be permitted under one or more exceptions to the Texas Open Meetings Act set forth in Title 5, Subtitle A, Chapter 551, Subchapter D of the Texas Government Code.

CALL TO ORDER

a) ROLL CALL

b) INVOCATION

c) PLEDGE OF ALLEGIANCE TO THE FLAGS OF THE UNITED STATES OF AMERICA AND STATE OF TEXAS

EXECUTIVE SESSION

1) Closed session pursuant to Tex. Gov't. Code Section 551.071 (Consultation with Attorney, including Contemplated or Pending Litigation and/or Settlement Offer) related to CCAD Property ID 30393. (Office of the City Attorney/ City Manager's Office)

PROCLAMATION(S)

1) Recognizing "Scout Allen Hobbs" (Mayor J. Cowen; Commissioner T. VIllarreal)

PUBLIC COMMENT PERIOD

- **Non-Agenda Items:** Kindly submit a "Public Comment Form" stating the City business or City policy you wish to speak to an hour before the start of the scheduled meeting time with the City Secretary. Forms are not reserved for anyone nor may time be deferred to anyone. PowerPoint presentations may not be accommodated. This period is limited to five (5) speakers with a time limit of three (3) minutes per speaker.
- **Agenda Items:** Kindly submit a "Public Comment Form" stating which item(s) on the agenda you wish to speak to an hour before the start of the scheduled meeting time with the City Secretary. Speakers will be allowed to address the Commission on the agenda item before it is to be considered. The speaker is limited to three (3) minutes.
- **Time Limits:** The City Commission shall have the discretion to modify its regulations regarding time limits on public comment if necessary. For example, the time limit may be shortened to accommodate a lengthy agenda or it could be lengthened to allow additional time for discussion on a complicated matter or if there is a need for an interpreter.

PRESENTATION

1) Recreation Centers: Building on Today's Success, Planning for Tomorrow (Parks and Recreation Department)

CITY MANAGER'S UPDATE(S)

1) Pet of the Month Adoption Spotlight

2) City of Brownsville 2026 Summer Interns

CONSENT AGENDA ITEM(S)

The following are considered to be routine by the City Commission and will be approved by one motion. There will be no separate discussion of these items unless a City Commissioner so requests, in which event the item will be removed from the Consent Agenda and considered in its normal sequence on the Agenda.

1) Consideration of approval of minutes from the City Commission Regular Meetings held on June 16, 2026 and July 7, 2026. (Office of the City Secretary)

2) Consideration and **ACTION** to approve **Resolution Number 2026-111**, authorizing Brownsville Metro to provide free fare for Customer Appreciation Day that will be held on July 23, 2026, and finding a public purpose. (Brownsville Metro)

3) Consideration and **ACTION** to approve a contract with Nueces Farm Center, Inc. in the Amount of $482,928.23 for Contract No. 273-26-ISD-CP, for the Purchase and Delivery of an SP 33 Slip Form Paver and Related Equipment for Engineering & Public Works Department, as budgeted. (Internal Services Department)

4) Consideration and **ACTION** to approve the purchase of trash cans and benches for Downtown Core (DT-C) as defined in Unified Development Code, and other areas of downtown as needed, based on community input from the Downtown Renaissance Master Plan in the amount of $813,339.30 as budgeted. (Planning & Redevelopment Department)

5) Consideration and **ACTION** to award a Contract to Terracon Consultants, Inc. in the amount of $126,425 for materials testing and inspection services, Contract No.309-26-EPMO-CMA, for Bid Package No. 1 of the Public Safety Complex. (Enterprise Project Management Office)

6) Consideration and **ACTION** to approve the first one-year renewal of the Independent Contractor Agreement for Architect/Engineering Consulting Services (RFQ PES-63-0523) with Jviation, Inc for the Brownsville South Padre Island International Airport. (Airport Department).

7) Consideration and **ACTION** to approve a lease of two (2) Ford F-250 Animal Control Units with Enterprise Fleet Management, with monthly lease payments of $1,596.23 for each vehicle, under Contract No. 308-26-ISD-CMA, for a 60-month term for each unit, as budgeted. (Internal Services Department)

8) Consideration and **ACTION** on **Resolution Number 2026-109** authorizing preparation of an updated Service and Assessment Plan (SAP) for the Madeira Espiritu Santo Public Improvement District (PID) Number One; calling for and authorizing the publication of a Notice of Public Hearing regarding the updated SAP and levy of the PID assessments under Chapter 311, Texas Tax Code, and such other matters related thereto. (Planning & Redevelopment Department)

9) Consideration and **APPROVAL** on **SECOND** and **FINAL READING** on **Ordinance Number 2026-1809** designating a +/- 1,021.48 acre area located in Cameron County, Texas, as a tax increment reinvestment zone; describing the boundaries of the zone; creating a board of directors for the zone; providing for an effective date and a termination date for the zone; naming the zone the "Estrella Reinvestment Zone Number Six, City of Brownsville"; establishing a tax increment fund; and containing other findings and provisions related thereto. (City Manager's Office)

10) Consideration and **APPROVAL** on **SECOND** and **FINAL READING** on **Ordinance Number 2026-1810** designating a +/- 804.13 acre area located in Cameron County, Texas, as a tax increment reinvestment zone; describing the boundaries of the zone; creating a board of directors for the zone; providing for an effective date and a termination date for the zone; naming the zone the "Greater Brownsville Tech District Reinvestment Zone Number Five, City of Brownsville"; establishing a tax increment fund; and containing other findings and provisions related thereto. (City Manager's Office)

PUBLIC HEARING(S)

1) Public Hearing and **ACTION** on **FIRST READING** on **Ordinance Number 235-2026-014-S**, to request a Specific Use Permit (SUP) in a Downtown Edge (DE) zoning district to allow an event center for Lots 13 & 14, Block 120, Brownsville Original Townsite, Cameron County, Texas, located at 1247 East Madison Street, Brownsville, Texas 78520, as shown in Exhibit "A". (District 4) (Planning & Redevelopment Department)

2) Public Hearing and **ACTION** on **FIRST READING** on **Ordinance Number 235-2026-015**, to rezone from Agriculture (AG) to Residential Single-Family (R-1) for an approximate 105.29 acres and Commercial Corridor (CC) for an approximate 14.67 acres to allow a single-family residential development and commercial development on a tract containing 119.96 acres of land out of a 239.92 acre tract (called the West 239.48 acres), out of Tract 40, Paredes Partition Tract, Subdivision "E", in Share 19 of the Espiritu Santo Grant, Cameron County, Texas, located at 1 West Paredes Line

Road , Brownsville, Texas 78566, as shown in Exhibit "A". (District 3) (Planning & Redevelopment Department)

3) Public Hearing and **ACTION** on **FIRST READING** on **Ordinance Number 235-2026-016**, to rezone from Residential Single-Family (R-1) and Traditional Neighborhood Corridor (TNC) to Traditional Neighborhood Corridor (TNC) to allow a multifamily development for 2.00 acres of land, more or less, comprised of Tract 1, being 0.37 acres of land; and Tract 2, being 1.63 acres of land, both Tracts out of Block 4, El Jardin Subdivision, Share 27 of the Espiritu Santo Grant, Cameron County, Texas, located at 970 South Central Avenue, Brownsville, Texas 78521, as shown in Exhibit "A". (District 1) (Planning & Redevelopment Department)

4) Public Hearing and **ACTION** on **FIRST READING** of **Ordinance Number 2026-1811** accepting and approving an update to the Paseo De La Resaca Lighting and Landscaping Maintenance Public Improvement District (PID) Operations and Maintenance Service and Assessment Plan; accepting and approving the updated assessment roll for the PID; making a finding of special benefit to property within the PID; levying special assessments against such property and establishing a lien on such property; providing for the method of assessment and the payment of the assessments levied against the PID assessed property; providing penalties and interest on delinquent Assessments; in accordance with Chapter 372 of the Texas Local Government Code, as amended. (Paseo PID Board)

5) Public Hearing and **ACTION** on **FIRST READING** on **Ordinance Number 2026-1813**, amending Chapter 54, Health and Sanitation, Article VI, Smoking in Public Places, to modify regulations related to smoking in public places to include e-cigarettes and other electronic nicotine delivery system devices, such as vapes, and regulations related to smoking in outside patios. (Office of the City Attorney)

6) Public Hearing and **ACTION** on the following proposed Charter amendments for the Special Election to be held on November 3, 2026. (Charter Review Committee/ Office of the City Secretary/ Office of the City Attorney) (Items fell to the floor):

a. Amending Charter Art. V., Administrative Provisions, to modify Section 4. - Qualifications. (Adding tax delinquency or other liability due to City as a bar to holding office)
b. Amending Charter Art. V., Administrative Provisions, Section 3. - Vacancies (Adding automatic triggers for forfeiting office)
c. Amending Charter Art. V., Administrative Provisions, Section 3. - Vacancies (Adding discretionary triggers for forfeiting office)

7) Public Hearing and **ACTION** on **FIRST READING** on **Ordinance Number 2026-1812**, ordering and calling a Charter Election on proposed amendments, during the General Election on November 3, 2026, on the following amendments (Charter Review Committee/ Office of the City Secretary/ Office of the City Attorney):

a. Amending Charter Art. V., Administrative Provisions, Section 13 – Compensation (Address Mayor and City Commissioner's compensation)
b. Amending Charter Art. V., Administrative Provisions, to add 21-B. - Office of the City Secretary (Creating the Office of the City Secretary)
c. Amending Charter Art. V., Administrative Provisions, to add 21-C. - Office of the City Auditor (Creating the Office of the City Auditor)
d. Amending Charter Art. V., Administrative Provisions, Section 28A. Audit and oversight committee (Increasing the membership on the committee)
e. Amending Charter Art. V., Administrative Provisions, Section 28A. Audit and oversight committee (general clean-up)

f. Amending Charter Art. V., Administrative Provisions, to add Section 35, Municipal Campaign Finance (Requiring Commission to set campaign finance regulations by ordinance)
g. Amending Charter Art. V., Administrative Provisions, to add Section 35, Code of Ethics; Ethics Advisory Commission (Requiring Commission to create an Ethics Board and adopt rules for ethics by ordinance)
h. Amending Charter Art. VII., General Provisions, to add Section 3-A, - The Initiative (Adding initiative petition procedures for citizens)
i. Amending Charter Art. VII., General Provisions, to add Section 3-B, - Referendum (Adding referendum procedures for citizens)
j. Amending the Charter Art. V., Administrative Provisions, to add Section 22-B, Merit Hiring (Adding Merit principle hiring to City Charter)
k. Amending the Charter Art. I through VII, except Art. VI, Utilities Board, to revise or eliminate provisions that have been superseded by state law and to update or eliminate archaic language.

ITEMS FOR INDIVIDUAL CONSIDERATION(S)

1) Consideration and **ACTION** to authorize a Contract with Ziwa Corporation in the amount of $3,909,970 for Contract No.196-26-ISD-RFP, for the HVAC Upgrades at the Brownsville Animal Regulation and Care Facility, as budgeted. (Internal Services Department)

2) Consideration and **ACTION** to approve **Resolution Number 2026-073** authorizing the Local Park Grant Program Resolution Authorizing an Application through the signature of a local government official for Texas Parks & Wildlife Grant use for La Posada Park and accepting the terms and conditions of said grant for the City of Brownsville (Parks and Recreation Department).

3) Consideration and **ACTION** to approve **Resolution Number 2026-110** creating the Brownsville Sports Commission to evaluate the current use, future programming opportunities, and long-term sustainability of professional and amateur sports programs within the City, and to provide recommendations to the City Commission; Adopting the Bylaws for said Commission; and authorizing City staff to take all necessary administrative actions related thereto. (City Manager's Office)

4) Consideration and **APPROVAL** on **SECOND** and **FINAL READING** on **Ordinance Number 2026-1808** amending Chapter 102 of the City of Brownsville Code of Ordinance to adjust the Resaca Fee. (Brownsville Public Utilities Board)

BOARD APPOINTMENT(S)

1) Consideration and **ACTION** on **Resolution Number 2026-083C** to appoint or reappoint members to the Paseo De La Resaca Lighting and Landscaping Maintenance District Service Plan Board (PASEO). (Office of the City Secretary)

2) Consideration and **ACTION** on **Resolution Number 2026-100** to appoint or reappoint members to the Transit Advisory Committee (TAC). (Brownsville Metro Department)

EXECUTIVE SESSION

1) Closed session pursuant to Tex. Gov't. Code Section 551.071 (Consultation with Attorney, including Contemplated or Pending Litigation) related to: Calvin and Wildrose Construction. (Office of the City Attorney/ City Manager's Office)

2) Closed session pursuant to Tex. Gov't. Code Section 551.071 (Consultation with Attorney, including Contemplated or Pending Litigation) related to: Midtown Entertainment District enforcement. (Office of the City Attorney/ City Manager's Office)

3) Closed session pursuant to Tex. Gov't. Code Sections 551.071 (Consultation with Attorney), 551.072 (Deliberation regarding real property), and 551.087 (Deliberation regarding Economic Development

Negotiations) regarding land use regulations involving certain businesses under the UDC. (Office of the City Attorney/ City Manager's Office)

4) Closed session pursuant to Tex. Gov't. Code Sections 551.071 (Consultation with Attorney) regarding the roles and responsibilities of Boards and Commissions, including budget transparency. (Office of the City Attorney/ City Manager's Office)

5) Closed session pursuant to Tex. Gov't. Code Section 551.071 (Consultation with Attorney) regarding roles and duties of City Commissioners and City Officials. (Office of the City Attorney/ City Manager's Office)

POSSIBLE ACTION ON ANY ITEM(S) AS DISCUSSED IN EXECUTIVE SESSION

NOTE: The City Commission of the City of Brownsville reserves the right to discuss any items in Executive Session whenever authorized under the Texas Open Meetings Act, Chapter 551 of the Texas Government Code.

1) Consideration and **ACTION**, if any, related to Midtown Entertainment District enforcement. (Office of the City Attorney/ City Manager's Office)

2) Public Hearing and **ACTION**, if any, on **FIRST READING** on **Ordinance Number 2026-1814,** amending Chapter 2, Administration, Article II, City Commission, Section 2-26, Meetings and agendas, in order to adopt rules and procedures for executive session, including preserving confidentiality of topics discussed in executive session. (Office of the City Attorney/ City Manager's Office)

3) Consideration and **ACTION**, if any, related to CCAD Property ID 30393. (Office of the City Attorney/ City Manager's Office)

ADJOURNMENT

NOTE: The City of Brownsville does not discriminate on the basis of disability in the admission of, access to, treatment of, or employment in its programs, activities, or public meetings. Any individual with a disability in need of an accommodation is encouraged to contact the Organizational Development & Human Resources Department at 956/548-6037 (voice or Relay TX) no later than three business days before the posted meeting to make proper arrangements.

By: John Cowen, Jr.
Mayor of the City of Brownsville

I, **Mayra A. Rios**, hereby certify that a copy of the Notice for the **July 21, 2026** Meeting of the Brownsville City Commission was posted on the designated bulletin board at City Hall – Federal Building, 1001 Elizabeth Street, a location readily accessible to the public, for at least three (3) business days prior to the scheduled meeting date, in compliance with Chapter 551 of the Texas Government Code. I further certify that the Agenda was posted on the City's website and can be downloaded by accessing: https://brownsvilletx.gov/129/Agendas-Minutes

Mayra A. Rios

Mayra A. Rios, TRMC
City Secretary

I certify that the attached notice and agenda of items to be considered by the Brownsville City Commission was removed by me from the Brownsville City Hall – Old Federal Building bulletin areas on the _____ day of _____, 2026.

_____
Employee Name and Signature Date

To:	Mayor and City Commission
Through:	Alan Guard, Interim City Manager
From:	Arturo Rodriguez, Public Health Director
Date:	Tuesday, July 21, 2026
Agenda #:	Pet of the Month Adoption Spotlight

Summary:
The **Pet of the Month** highlights a shelter animal in need of adoption and serves as an opportunity to increase community awareness of adoptable pets at the Brownsville Animal Regulation and Care Center (BARCC). The program is designed to promote adoptions by showcasing the featured animal's personality, history, and unique qualities, helping it gain additional exposure and improve its chances of finding a loving, permanent home.
This also provides an opportunity to encourage community engagement, support BARCC's lifesaving mission, and educate the public about responsible pet ownership and the importance of adopting shelter pets. By recognizing a Pet of the Month, BARCC aims to connect more animals with families while highlighting the positive impact of adoption on both pets and the community.

Project Scope and Analysis:

Funding:

Source:
Amount:
Local Contribution if Applicable:

Recommendation:

Commission Pillar:
Quality of Life & Vibrancy

Attachments:

None

To:	Mayor and City Commission
Through:	Alan Guard, Interim City Manager
From:	
Date:	Tuesday, July 21, 2026
Agenda #:	Consideration of approval of minutes from the City Commission Regular Meetings held on June 16, 2026 and July 7, 2026. (Office of the City Secretary)

Summary:

Project Scope and Analysis:

Funding:

Source:

Amount:

Local Contribution if Applicable:

Recommendation:

Commission Pillar:

Attachments:

1. M-06-16-2026
2. M-07-07-2026

THE STATE OF TEXAS §
CITY OF BROWNSVILLE §
COUNTY OF CAMERON §

MINUTES of a **Regular Meeting** of the City Commission of the City of Brownsville, Texas, held on **Tuesday, June 16, 2026**, at **5:00 p.m.** at the **City Commission Chambers,** located at **1001 East Elizabeth Street** and **via Webex Teleconference Meeting by logging on at:**

https://brownsvilletx.webex.com/brownsvilletx/j.php?MTID=mb0f8d1240d8f166059ae34c036f78f88

The following City Commission members were present:

JOHN COWEN, JR.	**Mayor**
COMMISSIONERS:	
TINO VILLARREAL	**At-Large "A"**
NURITH GALONSKY	**At-Large "B"**
BRYAN L. MARTINEZ	**District 1**
LINDA C. MACIAS	**District 2**
GUSTAVO DE LEÓN	**District 3**
PEDRO E. CARDENAS	**District 4**

The following staff members were present:

ALAN GUARD	**Interim City Manager**
DOROTEO GARCIA	**Interim Deputy City Manager**
WILL TREVINO	**City Attorney**
JENNIFER AVENDANO	**Frist Assistant City Attorney**
MARINA ZOLEZZI	**Interim Assistant City Manager**
EFREN TRUJILLO	**Interim Chief of Staff**
MAYRA A. RIOS	**City Secretary**

The following staff members were absent:

FELIX SAUCEDA	**Interim Deputy City Manager/Chief of Police**

CALL TO ORDER

a) ROLL CALL

DRAFT

A quorum being present, Mayra Rios, City Secretary, read the call to order to consider the matters as posted and filed for the record in the Office of the City Secretary pursuant to the Texas Open Meetings Act.

Mayor John Cowen, Jr., called the meeting to order at 5:00 p.m.

Mayor John Cowen, Jr., Commissioner Tino Villarreal, Commissioner Nurith Galonsky, Commissioner Bryan L. Martinez, Commissioner Linda C. Macias, Commissioner Gustavo De Leon, and Commissioner Pedro Cardenas.

b) INVOCATION

Rosalinda Fernandez delivered the invocation.

PLEDGE OF ALLEGIANCE TO THE FLAGS OF THE UNITED STATES OF AMERICA AND STATE OF TEXAS

The Pledge of Allegiance to the United States Flag and the Texas Flag was led by Mayor John Cowen, Jr., and the City Commission.

PROCLAMATION(S)

1) **Recognizing June 16th as "International Domestic Workers Day" (Mayor J. Cowen, Jr.; Commissioner N. Galonsky)**

Commissioner Nurith Galonsky proclaimed June 16, 2026, as “International Domestic Workers Day,” recognizing the vital contributions of domestic workers locally and globally, acknowledging their ongoing exploitation and lack of protections, honoring the organizations advocating for their rights, and affirming the City’s commitment to promoting equality, justice, and fair labor protections for all domestic workers.

2) **Recognizing "Cole Mata" (Commissioner G. De Leon; Commissioner B. Martinez)**

Commissioner Gustavo De Leon recognized Cole Mata for his volunteer service and contributions to the community. Commissioner De Leon acknowledged Mr. Mata’s ongoing efforts since 2022 to help maintain the City’s hike and bike trails through litter removal and expressed appreciation for his dedication to preserving public spaces for residents and visitors.

PUBLIC COMMENT PERIOD

Antonio Caldwell submitted a Public Comment Form but was not present to address the City Commission.

Yolanda Speece, 305 W. Madison St., Brownsville, Texas, addressed the City Commission regarding concerns related to the City’s meeting procedures.

Marie Motalvo, 147 Sacramento River Dr., Brownsville, Texas, addressed the City Commission regarding concerns about a truck allegedly spraying chemicals into a local canal connected to the Laguna Madre and requested additional public information and review of the matter.

DRAFT

Helen Dhue submitted a Public Comment Form; however, she wished to register her comments to the Commission.

Olivette Pena Fisher submitted a Public Comment Form; however, his comments will be addressed during Public Hearing Item number 1.

Diablo Velez, 1254 E. Tyler St., Brownsville, Texas, addressed the Commission to express concerns regarding local and federal government regulations.

Blanca Martinez submitted a Public Comment Form; however, she wished to register her concerns regarding individuals pouring chemicals into the water at Military Highway and Ruben Torres Road, creating a significant public health concern for families who fish in the area and for the waterway that flows to the Laguna Madre.

CITY MANAGER UPDATE(S)

1) **Recognizing the City of Brownsville for being selected as a winner of the Governor's Community Achievement Awards with Keep Texas Beautiful (KTB) and the Texas Department of Transportation (TxDOT).**

Alan Guard, Interim City Manager, introduced Maribel Guerrero, Director of Engineering and Public Works, who in turn presented Mr. Nick Tamayo, Project Coordinator and Event Specialist for Engineering and Public Works with the Keep Brownsville Beautiful team to provide a summary of this recognition.

Mr. Tamayo delivered a brief presentation on Brownsville's recent receipt of the Governor's Community Achievement Award, an honor granted through Keep Texas Beautiful and TxDOT that provided the city with $310,000 for beautification projects along state maintained rights of way, highlighting past cleanup initiatives, recycling events, community partnerships, and ongoing beautification efforts, while EPW leadership expressed pride in these accomplishments, appreciation for the commission's support, and stated that project recommendations for the use of the awarded funds will be brought back to the commission once identified.

Brief discussion among the City Commission and City staff.

2) **Recognizing the City of Brownsville Communications and Marketing & Brownsville TV for receiving a Blue Pencil and Gold Screen Award for News Video (Brownsville TV Newscast) by the National Association of Government Communicators (NAGC).**

Alan Guard, Interim City Manager, recognized the Department of Communications and Marketing along with the Brownsville TV team for earning national honors through the Blue Pencil and Gold Screen Awards program, which celebrates excellence in government communications; he noted that the National Association of Government Communicators presented 102 awards across 31 categories during its ceremony in Greater Palm Springs, California, where Brownsville's team was acknowledged for its commitment to transparent, accessible, and meaningful public communication, and where Brownsville's TV newscast was specifically honored as a professionally produced municipal news program that informs residents about city services, public safety, quality-of-life initiatives, and community events through clear storytelling, compelling visuals, and interviews that strengthen public trust.

DRAFT

PRESENTATION(S)

1) **Presentation on On-Pointe Insights Citizen Satisfaction Survey Process.**

Alan Guard, Interim City Manager, introduced Ron Gailey of OnPoint Insights, who provided a comprehensive presentation on Brownsville's new citizen satisfaction survey dashboard, an online, interactive platform designed to give residents and city leadership clear, accessible insight into community feedback through demographic filters such as district, gender, age, income, and length of residency.

Mr. Gailey outlined his extensive background in data analysis and executive reporting before explaining the survey process, which yielded 709 balanced responses and showed overall positive trends in residents' beliefs of city improvement, direction, and comparative standing. He highlighted key concerns identified by respondents, including streets, traffic, infrastructure, environmental preservation, and growth management, and demonstrated how the dashboard organizes 50 city attributes into priority categories, enabling leaders to identify high impact long term issues, short term improvement opportunities, and department specific feedback. The presentation emphasized the tool's ability to support data-driven decision making, enhance transparency, and strengthen the city's alignment with resident needs, offering a valuable resource for strategic planning and operational refinement.

Mayor John Cowen Jr. asked how potential bias in survey responses is addressed, noting that individuals who choose to participate in surveys often hold strong opinions.

Ron Gailey explained that the process relies on a randomized sample of the population to balance perspectives, acknowledging that some negative sentiments naturally occur but emphasizing that overall results tend to be more positive. He advised that while reading comments, city leaders should reference the quantitative results to accurately gauge the importance of issues and avoid over-weighting isolated negative viewpoints. Mr. Gailey added that Brownsville's team was exceptionally seamless and intuitive to work with, offering his compliments for their professionalism and collaboration.

2) **Bloomberg Harvard City Leadership Initiative City of Brownsville Updates.**

Marina Zolezzi, Interim Assistant City Manager, provided an update on the City of Brownsville's participation in the Bloomberg Harvard City Leadership Initiative. She noted that approximately one year prior, with Brownsville selected as one of 18 cities participating in the Innovation Track. She recognized the diverse departmental team involved, including Parks, Public Health, the City Manager's Office, CMD IT, and Multimodal Transportation and the City Commission for their continued support.

Nalleli Trejo, Cannery Market Manager and Innovation Lead, followed by describing the intensive research sprint conducted early in the process. The team gathered input from city leadership, residents, and subject matter experts. Key findings highlighted chronic health challenges in the Rio Grande Valley, including high rates of diabetes, and emphasized residents' need for accessible, culturally relevant programming to promote physical and mental wellbeing.

Based on insights from 59 resident interviews and four ideation sessions engaging 68 participants, the team developed a mission statement envisioning Brownsville as a model healthy city by 2035. The design phase focused on understanding the needs of working class and at risk families, ensuring solutions were community centered and aligned with the City's One City philosophy. More than 500 ideas were generated, many of which aligned with existing City initiatives, highlighting communication gaps and opportunities for increased community awareness. Samuel Perez, Parks Maintenance Manager and Project Lead, explained that 10 ideas were selected for the final portfolio. One concept, "City of Parks," emerged as a complex but compelling umbrella vision guiding all

DRAFT

subsequent strategies. During a prototype activation at the Lunada in May, the City achieved over 23,000 digital touchpoints, breaking Bloomberg Harvard's record for prototype engagement. This success was supported by a $3,500 grant used for supplies and videography.

Samuel Perez, Parks and Recreation Maintenance Manager and Project Lead, noted that innovation will be intentionally embedded into City operations, including the One City Leadership Conference, director and assistant director book reviews, and the One City University learning platform. The team's mission emphasizes collaboration, communication, participatory leadership, and continuous learning to improve outcomes for residents. The initiative aligns closely with the newly completed Parks and Health Master Plan, which focuses on healthy people, active lifestyles, walkability, and nature based park improvements such as rebuilding the tree canopy. The team concluded by expressing appreciation for City leadership and announcing that a Bloomberg Harvard Fellow will join the City during the summer to support ongoing implementation efforts.

Commissioner Gustavo De León expressed his appreciation to all City of Brownsville staff involved in organizing the event. He noted that he had not previously attended Lunada events but found the experience meaningful. He observed many children and families participating and shared that it was emotional for him to see the community enjoying a city-hosted cultural gathering.

Staff acknowledged the Commissioner's comments and emphasized that the event's success reflects the City's One City approach.

3) Update on International Council of Shopping Centers (ICSC) held on May 18–20, 2026.

Nathan Burkhart, Director of Brownsville Conventions & Visitors and Office of Space Commerce Department, provided an update on the City of Brownsville's ongoing retail recruitment strategies. He noted that a key concern consistently raised within the community is retail leakages specifically, residents traveling to neighboring cities and counties to dine, shop, and access first to market retail options. In alignment with the City's One City approach, an impromptu retail recruitment working group was formed. Ahead of the International Council of Shopping Centers (ICSC) Real Estate Convention, the group coordinated unified outreach to retailers, developers, and landowners. He reported that several retailers are already evaluating Brownsville as a potential first to market location, and that the city is now positioned to work effectively with high end developers. He identified five promising development areas within Brownsville, explaining that the goal is to take a more strategic and data driven approach to retail expansion.

Commissioner De León expressed optimism regarding future retail expansion and reiterated that attracting more businesses to Brownsville will meet community needs and enhance sales tax revenue. He concluded by thanking Director Burkhart and all partners for their continued commitment to advancing retail opportunities for the city.

4) Charter Review Committee Update.

Commissioner Nurith Galonsky provided an update on the City Charter Review Committee. The purpose of the presentation was to inform the Commission of the committee's progress and to seek guidance regarding the timing of potential charter amendments—specifically, whether propositions should be placed on the November general election ballot or the May municipal ballot. Commissioner Galonsky explained that the committee has met four times and has discussed several provisions for potential inclusion. She stated that both the committee and the City Attorney's Office require direction from the Commission due to strict procedural timelines necessary for ballot preparation.
She summarized the items reviewed by the committee:

- Consideration of increasing salaries—proposed at $60,000 for the Mayor and $40,000 for City Commissioners (up from $40,000 and $25,000 respectively). She noted the amounts are flexible

DRAFT

and suggested that salaries could alternatively be tied to median household income to ensure automatic adjustments over time.

- The City Secretary's Office is not currently referenced in the charter. The committee proposes adding language that formally establishes the office.
- The Office of the City Auditor recommended amendments that would bring charter language in line with common practice in other municipalities. The committee may recommend expanding the membership from five to seven to allow each City Commissioner to appoint a representative, similar to other boards.
- Consideration of adding language to the charter directing the Commission to adopt campaign finance regulations by ordinance, without requiring the charter to include specific restrictions.
- Disciplinary Provisions for City Commissioners proposed updates include strengthened language reflecting practices used in other cities, potentially addressing vacancies caused by excessive absences or misconduct.

Commissioner Galonsky noted that these items would be finalized and formally presented to the Commission in July.

Will Treviño, City Attorney have explained that the committee's presentation fulfills a requirement of its authorizing resolution. If the Commission elects to hold a charter amendment election in November, individual propositions will be presented at the July 7 meeting for selection. Additional meetings would be required in July and August to call the election per charter requirements.

Mayra Rios ,City Secretary Commission that a third party petition effort related to codifying local preference for vendors, is expected to be submitted with over 8,000 signatures. If validated, the petition would trigger a mandatory charter election in November. Because charter amendments may only be made every two years, the petition's presence on the November ballot would prevent the City from placing other charter amendments on a later ballot.

Commissioner Bryan L. Martinez expressed that although a May election would allow for a clearer municipal focus, the City must be prepared to proceed with a November charter amendment election if legally required.

Staff clarified that the petition under consideration must meet a threshold of 5% of registered voters, and once submitted, the City Secretary has five days to verify the signatures. If the petition qualifies, the City is obligated to call the election for November; if it does not qualify, the Commission may shift its charter amendment election to May and continue refining the proposed charter changes.

Commissioners emphasized the importance of maintaining clarity and preventing public confusion by ensuring that information presented aligns with final recommendations.

Commissioner Galonsky concluded by encouraging Commissioners to bring forward any additional charter-related matters for the committee to review before the July 7 meeting, when final draft language will be presented.

CONSENT AGENDA ITEM(S)

1) Consideration of approval of minutes from the City Commission Special Meeting held on May 26, 2026 and the City Commission Regular Meeting held on June 2, 2026. (Office of the City Secretary)

2) Consideration and **ACTION** to approve a Cooperative Purchase Agreement No.199-26-AIR-CP with SpawGlass Contractors Inc. for the furnishing and installation of an illuminated monument sign in the amount of $256,470, as budgeted, using TIPS Contract #24010402. (Airport Department)

3) Consideration and **ACTION** to approve Contract No. 252-26-ISD-CP with R.L. Abatement for Asbestos Abatement and Interior Selective Demolition at City Hall, with an anticipated completion of January 31, 2028, in the amount of $418,077, as budgeted. (Internal Services Department)

DRAFT

4) Consideration and **ACTION** to approve a lease of a Gooseneck Scraper with D&M Commercial Leasing for Monthly Lease Payments of $6,316.69 for Contract No. 258 26 ISD CP, for a 72 month term, as budgeted. (Internal Services Department)
5) Consideration and **ACTION** to authorize Contract No.250-26-BMT-CP with EnGo Planet Energy Solutions LLC for the purchase and delivery of 17 monopoles and 1 bus shelter in the amount of $185,323, as budgeted. (Brownsville Metro)
6) Consideration and **ACTION** to authorize a joint-funding agreement between U.S. Geological Survey Oklahoma-Texas Water Science Center and the City of Brownsville for negotiated deliverables, during the period of October 1, 2026, through September 30, 2027, in the amount of $138,500. (Engineering and Public Works Department)
7) Consideration and **ACTION** to execute First Renewal on agreement No. ACS-02-1123 with One Stop Janitorial Services for Janitorial Services for the Brownsville South Padre Island International Airport, in the amount of $310,257.36, as budgeted. (Airport Department)
8) Consideration and **ACTION** on a severance agreement with the City Attorney. (City Commission)
9) Consideration and **ACTION** to reject all bids received for Solicitation No. 099-26-EPW-IFB, Excavation, Loading, and Hauling Services. (Procurement Department)
10) Consideration and **ACTION** to approve **Resolution Number 2026-089** supporting the application of BHMC VDC Tropical Gardens, LP for housing tax credits in connection with the proposed rehabilitation of Tropical Gardens at Boca Chica; and providing an effective date. (Planning & Redevelopment Department)
11) Consideration and **ACTION** to approve **Resolution No. 2026-91** authorizing the selection of projects and allocation of funding under the Rio Grande Valley Metropolitan Planning Organization (RGVMPO) Call for Projects Program. (Multimodal Transportation)
12) Consideration and **ACTION** to approve **Resolution No 2026-92** authorizing the submission of Brownsville Metro's application for a $50,000 award through the Uber Transit Innovation Fund, which supports transit agencies in piloting innovative on-demand mobility solutions designed to enhance mobility, improve service delivery, and expand transportation access. (Brownsville Metro)
13) Consideration and **ACTION** to approve **Resolution No 2026-93** authorizing the submission of Brownsville Metro's application to the Federal Transit Administration (FTA) in the amount of $650,000 which supports the planning to improve economic development, ridership, foster Multimodal connectivity and accessibility, and improve transit access for pedestrian and bicycle traffic. (Brownsville Metro)
14) Consideration and **ACTION**, on **Resolution Number 2026-095** accepting a petition requesting designation of a tax increment reinvestment zone, authorizing preparation of a preliminary Reinvestment Zone Financing Plan, calling for a public hearing under Chapter 311, Texas Tax Code, and authorizing publication of a Notice of Public Hearing regarding the possible creation of a Reinvestment Zone to be known as TIRZ No. 5, and such other matters related thereto. (City Manager's Office)
15) Consideration and **ACTION** on **Resolution Number 2026-096** accepting a petition requesting designation of a tax increment reinvestment zone, authorizing preparation of a preliminary Reinvestment Zone Financing Plan, calling for a public hearing under Chapter 311, Texas Tax Code, and authorizing publication of a Notice of Public Hearing regarding the possible creation of a Reinvestment Zone to be known as TIRZ No. 6, and such other matters related thereto. (City Manager's Office)
16) Consideration and **APPROVAL** on **SECOND** and **FINAL READING of Ordinance Number 235-2026-008**, to rezone from Residential Single-Family (R-1) to Residential Suburban (R-2) to allow a duplex and alternative dwelling unit for a 0.501-acre tract of land comprised of Tracts I and II, each being a 0.167 acre of land out of a 6.50-acre tract out of a 15.00-acre tract; and Tract III, being a 0.167 acre of land out of a 1.00-acre tract, all out of Block 4, El Jardin Subdivision, Cameron County,

DRAFT

Texas, located at 4464 Waco Road, Brownsville, Texas 78521, as shown in Exhibit "A". (District 1) (Planning & Redevelopment Department)

17) Consideration and **APPROVAL** on **SECOND** and **FINAL READING** on **Ordinance Number 2026-235.127**, to amend the City of Brownsville Unified Development Code, Article 3 – Subdivision Regulations, Section 3.4 – Subdivision Design Standards; Article 4 – Zoning Regulations, Section 4.2 – Zoning Procedures, Section 4.3 – Zoning Districts, Section 4.4 – Land Uses, Section 4.5 – Building Types; Article 6 – Definitions, to establish state regulations adopted at the 89th Legislative Session for the purpose of creating housing diversity; and dealing with related matters, as shown in Exhibit "A". (Planning & Redevelopment Department)

18) Consideration and **APPROVAL** on **SECOND** and **FINAL READING** on **Ordinance Number 2026-235.128**, to amend the City of Brownsville Unified Development Code, Article 4 – Zoning Regulations, Section 4.2 – Zoning Procedures, to establish state regulations adopted at the 89th Legislative Session for the purpose of updating protest petition thresholds; and dealing with related matters, as shown in Exhibit "A". (Planning & Redevelopment Department)

19) Consideration and **APPROVAL** on **SECOND** and **FINAL READING** on **Ordinance Number 2026-1807** amending Chapter 66, Municipal Court, providing for municipal court civil jurisdiction to enforce health and safety and nuisance abatement ordinances; authorizing the issuance of search and seizure warrants; providing for concurrent jurisdiction; creating a court of record, and other matters pertaining thereto. (Office of the City Attorney)

City Commissioners requested to pull consent items 7 and 19.

Motion: Motion was made by Commissioner Bran L. Martinez seconded by Commissioner Tino Villarreal to approve consent agenda items 1 through 6 and 8 through 18. The vote was cast 7 for, 0 against. The motion carried unanimously.

7) Consideration and ACTION to execute First Renewal on agreement No. ACS-02-1123 with One Stop Janitorial Services for Janitorial Services for the Brownsville South Padre Island International Airport, in the amount of $310,257.36, as budgeted. (Airport Department)

Commissioner Bryna L. Martinez inquired about the terms of the janitorial services contract, noting that the original agreement ran from January 2023 through December 2025 and questioning how the renewal from January through December 2026, would be handled given the current date.

Faisal Khalifa, Interim Airport Director, clarified that the extension represents a one-year renewal executed while staff finalize documentation and square footage details for a new solicitation, acknowledging a lapse in formal contract timing but confirming that services continued uninterrupted and that the city would retroactively compensate the vendor for the full year, after which the airport will proceed with a new competitive solicitation process.

Motion: Motion was made by Commissioner Bran L. Martinez seconded by Commissioner Pedro Cardenas to approve First Renewal on agreement No. ACS-02-1123 with One Stop Janitorial Services for Janitorial Services for the Brownsville South Padre Island International Airport, in the amount of $310,257.36, as budgeted. The vote was cast 6 for, 0 against [Commissioner Galonsky absent]. The motion carried unanimously.

19) Consideration and APPROVAL on SECOND and FINAL READING on Ordinance Number 2026-1807 amending Chapter 66, Municipal Court, providing for municipal court civil jurisdiction to enforce health and safety and nuisance abatement ordinances; authorizing the issuance of search and seizure warrants; providing for concurrent jurisdiction; creating a court of record, and other matters pertaining thereto. (Office of the City Attorney)

DRAFT

Commissioner Pedro Cardenas raised concerns regarding recent communication with the municipal judge, questioning whether outstanding issues had been resolved, including confusion expressed by members of the judge's staff.

Will Treviño, City Attorney, explained that he met with the judge the previous week, reviewed the proposed ordinance, and received redlined revisions that were incorporated, clarifying that the ordinance would designate the municipal court as a court of record and restructure certain administrative functions to preserve judicial immunity by separating judicial duties from personnel management, while maintaining statutory oversight for positions such as court clerks, bailiffs, and court reporters. He further detailed that the restructuring responds to past litigation risks related to judicial appointment and employee supervision and distinguishes between judicial functions and municipal court services managed by an existing administrator.

Commissioner Cardenas expressed concern that broader structural changes had been bundled with unrelated matters, such as enforcement of political sign regulations, and felt the communication had not been fully clear.

After discussion, commissioners agreed to table the second reading of the ordinance until the July 7 meeting to ensure the judge can attend and provide his position publicly.

Alan Guard, Interim City Manager, confirmed he will follow-up directly with the judge before the item returns.

Motion: Motion was made by Commissioner Bran L. Martinez seconded by Commissioner Tino Villarreal to table the item 7 to the next meeting to be held on July 7, 2026. The vote was cast 7 for, 0 against. The motion carried unanimously.

PUBLIC HEARING(S)

1) **Public Hearing and ACTION on FIRST READING on Ordinance Number 235-2026-009, to rezone from Commercial Corridor (CC) to Residential Estate (RE) to allow a single-family residence for 2.64 acres out of 5.0 acres out of the Baldauf 10.88-acre tract out of the C.B. Hamlet 47.9-acre tract, Share 12, El Jardin Subdivision, Cameron County, Texas, located at 32 Fish Hatchery Road, Brownsville, Texas 78520, as shown in Exhibit "A". (District 4) (Planning & Redevelopment Department)**

Carlos Guerra, Senior Planner with the Planning and Redevelopment Department, presented a request to rezone a portion of property on Fish Hatchery Road from Commercial Corridor to Residential Estate to allow construction of a single family residence. He explained that required public notices were issued, signage was posted, and eight mail-outs were sent to nearby property owners, with no written opposition received. Mr. Guerra outlined surrounding zoning and land uses, noting that adjacent parcels are predominantly large lot single family homes consistent with the Residential Estate designation, and confirmed the request aligns with the city's future land use plan for the Emerging CityWest District. The Planning and Zoning Commission previously recommended approval, though one nearby owner expressed concern that the change might affect commercial activity on their own property, while another resident spoke in favor of the residential zoning.

Brief discussion among the City Commission and City staff.

Mayor John Cowen Jr. opened the public hearing.

Olivet Daniel Fisher, accompanied by her nephew and property owner Ernie Peña, 32 Fish Hatchery Road, Brownsville, Texas supported the rezoning and clarified that the 2.64acre portion

under consideration lies at the rear of a larger five acre tract long held by their family, is surrounded by similar residential estate uses, and is intended solely for a single family home. She emphasized that the request does not alter neighboring commercial rights, reduces potential land use conflicts, and reflects a commitment to completing the subdivision process properly, particularly following the recent passing of her brother who initiated the rezoning.

Motion: Motion made by Commissioner Pedro Cardenas, seconded by Commissioner Linda C. Macias to close the public hearing. The vote was cast 7 for, 0 against. The motion carried unanimously.

Motion: Motion made by Commissioner Pedro Cardenas, seconded by Commissioner Linda C. Macias to approve the first reading of Ordinance Number 235-2026-009. The vote was cast 6 for, 0 against [Commissioner Galonsky abstain].The motion carried unanimously.

2) **Public Hearing and ACTION on FIRST READING on Ordinance Number 235-2026-010, to rezone from Residential Single-Family (R-1) to Residential Suburban (R-2) to allow a duplex for Lot 4, Block 4, McKenzie Estates Subdivision, Cameron County, Texas, located at 995 North Iowa Road, Brownsville, Texas 78521, as shown in Exhibit "A". (District 2) (Planning & Redevelopment Department)**

Carlos Guerra, Senior Planner with the Planning and Redevelopment Department, presented a request to rezone a property from Residential Single Family (R1) to Residential Suburban (R2) to allow a duplex that had been constructed without permits, prompting a code enforcement action; he noted the applicant promptly approached the department to correct the issue and pursue rezoning. In compliance with state law, staff issued public notices, posted signage, and mailed 25 notices to surrounding property owners, receiving no written opposition. Mr. Guerra explained that the surrounding neighborhood contains a mix of duplexes, triplexes, single family homes with accessory units, and an apartment complex, and that adjacent properties include existing duplexes, making the request consistent with surrounding land uses and the city's future land use plan for the Transition East District. He described that, if approved, the duplex must be relocated to the front of the property to serve as the primary structure and meet setback requirements, with the option to retain an accessory dwelling unit as allowed in R2 zoning.

Commissioner Bryna L. Martinez asked about repercussions for buildings without permits.

Martin Vega Assistant Director from Planning & Redevelopment Department clarified that the penalty is twice the permitting fee and that the structure must undergo full site and code compliance review, including inspection under the International Residential Code, before a certificate of occupancy can be issued. Mr. Vega affirmed that the applicant is actively cooperating to bring the property into compliance.

Brief discussion among the City Commission and City staff.

Mayor John Cowen Jr. opened the public hearing.

There were no speakers.

Motion: Motion made by Commissioner Tino Villarreal, seconded by Commissioner Bryan L. Martinez to close the public hearing. The vote was cast 7 for, 0 against. The motion carried unanimously.

DRAFT

Motion: Motion made by Commissioner Bryan L. Martinez, seconded by Commissioner Linda C. Macias to approve the first reading of Ordinance Number 235-2026-010. The vote was cast 7 for, 0 against. The motion carried unanimously.

3) **Public Hearing and ACTION on FIRST READING on Ordinance Number 235-2026-011-S, to request a Specific Use Permit (SUP) in a Commercial Corridor (CC) zoning district to allow an event center for Lot 2, Block 1, Juan Garza Subdivision Replat, Cameron County, Texas, located at 4810 Boca Chica Boulevard, Brownsville, Texas 78521, as shown in Exhibit "A". (District 1) (Planning & Redevelopment Department)**

Samuel Nunez, Senior Planner with the Planning and Zoning Department, presented a specific use permit request to allow an event center within a Corridor Commercial district on Boca Chica Boulevard, noting that the overall project also includes a beauty salon but that the SUP pertains solely to the event center component. He detailed that public notices were issued, signage was posted, and 17 mail-outs were sent within a 200foot radius, with no written opposition received. Nunez reviewed surrounding zoning and land uses—including nearby single family homes, multifamily units, and commercial buildings—and confirmed the request is consistent with the city's comprehensive and future land use plans. Staff and the Planning and Zoning Commission recommended approval with two conditions: installation of sound mitigation materials to maintain interior noise levels at or below 60 decibels, and adherence to separated operating hours for the event center and beauty salon to ensure parking compliance, with the event center operating Fridays and Saturdays from 6:00 p.m. to 11:00 p.m., and the salon operating Monday through Saturday from 8:00 a.m. to 5:00 p.m. Nunez added that SUP conditions can be enforced, including citations should either use violate approved hours.

Brief discussion among the City Commission and City staff.

Mayor John Cowen Jr. opened the public hearing.

There were no speakers.

Motion: Motion made by Commissioner Pedro Cardenas, seconded by Commissioner Bryan L. Martinez to close the public hearing. The vote was cast 6 for, 0 against [De Leon absent]. The motion carried unanimously.

Motion: Motion made by Commissioner Nurith Galosnky, seconded by Commissioner Pedro Cardenas to approve the first reading of Ordinance Number 235-2026-011-S. The vote was cast 7 for, 0 against. The motion carried unanimously.

4) **Public Hearing and ACTION on FIRST READING on Ordinance Number 2026-1806, to annex into the City of Brownsville boundary limits, a property described as a 47.27-acre tract being Lot 1, Block 202, El Jardin Resubdivision, according to the map or plat thereof recorded in Volume 4, Page 48, Map Records of Cameron County, Texas, save and except all that part or portion thereof conveyed to the County of Cameron in deed dated November 18, 1993, recorded in Volume 2658, Page 181, Official Records of Cameron County, Texas, located on South Dakota Avenue, Brownsville, Texas 78521, as shown in Exhibit "A". (Planning & Redevelopment Department)**

Samuel Nunez, Senior Planner with the Planning and Zoning Department, presented a voluntary petition submitted by Scatea Holdings, LLC to annex approximately 47.27 acres into the official city limits of Brownsville for a future single family residential development that is expected to include

DRAFT

lots ranging from 6,300 to 7,300 square feet, along with proposed townhome lots. He explained that the subdivision process will continue through Planning and Redevelopment once annexation is approved and noted that the property, located along South Dakota Avenue just north of Southmost Road, is surrounded by undeveloped land and existing single family neighborhoods. Nunez outlined the municipal annexation requirements under the Local Government Code, including a voluntary petition, a written service agreement, proper public notice, and notification to affected taxing entities—and confirmed staff's recommendation for approval.

Brief discussion among the City Commission and City staff.

Mayor John Cowen Jr. opened the public hearing.

There were no speakers.

Motion: Motion made by Commissioner Nurith Galonsky, seconded by Commissioner Pedro Cardenas to close the public hearing. The vote was cast 7 for, 0 against. The motion carried unanimously.

Motion: Motion made by Commissioner Nurith Galosnky, seconded by Commissioner Pedro Cradenas to approve the first reading of Ordinance Number 2026-1806. The vote was cast 7 for, 0 against. The motion carried unanimously.

5) Public Hearing and ACTION on FIRST READING on Ordinance Number 2026-1808 amending Chapter 102 of the City of Brownsville Code of Ordinance to adjust the Resaca Fee. (Brownsville Public Utilities Board)

Board representatives from the Brownsville Public Utilities Board (BPUB), including Chair Gerardo Martinez and board member Martin Sarkis, appeared before the City Commission to present the Board's recommendation regarding the Rasaca Fee, outlining the history, purpose, and current status of the dredging program that supports raw water storage for the city's utility system.

Paul Gonzalez, General Counsel & Chief Legal Officer, explained that the fee, originally implemented in 2022 to help fund dredging operations and support a federal U.S. Army Corps of Engineers project, was later held flat due to project delays and has accumulated funds over time. Following the Corps' termination of its project in April 2024, the BPUB Board reassessed long-term policy needs and determined that future dredging should be limited to areas directly connected to water plant operations, including portions of Resaca de la Guerra and locations tied to indirect potable reuse efforts. The Board recommended reducing the Rasaca Fee to two dollars per water account while working toward incorporating dredging costs into a comprehensive water rate study now underway.

Commissioners discussed the uniform fee structure, the limited scope of dredging areas, the relationship between dredging and water storage capacity during ongoing drought conditions, and the distinction between citywide benefits and resaca-adjacent property impacts.

Staff clarified that only specific segments of resacas are included, grants partially fund dredging, and additional work remains in two major areas linked to PUB's water system. The item was presented for first reading, with staff available to answer further questions.

Commissioner Gustavo De Leon asked for the current Rasaca Fee fund balance and whether the proposed reduction to $2 per water account would be fixed or subject to future increases.

BPUB staff reported a balance of approximately $8.5 million and explained that $2 is intended to sustain essential dredging operations, with any future changes contingent on added project scope and the outcome of the forthcoming comprehensive water rate study.

Mayor John Cowen Jr. inquired how long BPUB could continue operations if the fee were eliminated entirely.

BPUB staff estimated three to four years of runway given planned equipment procurements and federal grant match obligations, noting they would ideally align any fee elimination with adoption of a new rate structure.

Commissioner Tino Villarreal raised concerns about ratepayer confusion if the Rasaca Fee is reduced while a separate city drainage utility fee is introduced, urging better coordination through the joint committee.

Interim City Manager Alan Guard acknowledged delays in the drainage fee study, confirmed it is now largely complete, and agreed that reconvening the committee to deliver a unified recommendation to both boards would be the wisest approach.

Commissioner Pedro Cardenas questioned how the proposed $2 Rasaca Fee translates within the water rate structure and argued that, given BPUB's estimated three to four year runway with the existing $8.5 million balance, fully eliminating the fee now would be clearer for ratepayers than reducing it and later discontinuing it; he also noted the need to explain any future city drainage utility fee as a separate, surface area based program.

BPUB staff clarified that the Rasaca Fee is a water supply fee—not a drainage fee—intended to fund dredging tied to raw water storage, and that current funds would be limited to specific segments supporting PUB operations, with broader resaca restoration (including the Jaguar Park segment) no longer covered following the U.S. Army Corps of Engineers' termination of its project earlier in the year.

Brief discussion among the City Commission and City staff.

Mayor John Cowen Jr. opened the public hearing.

There were no speakers.

Motion: Motion made by Commissioner Bryan L. Martinez, seconded by Commissioner Pedro Cradenas to close the public hearing. The vote was cast 7 for, 0 against. The motion carried unanimously.

Motion: Motion made by Commissioner Tino Villarreal, seconded by Commissioner Pedro Cardenas to remove the Resaca Fee. The vote was cast 6 for, 0 against [Cardenas absent]. The motion carried unanimously.

ITEMS FOR INDIVIDUAL CONSIDERATION(S)

1) **Consideration and ACTION to amend the phased contract with Noble Texas Builders for Construction Manager at Risk (CMAR) Services for the Brownsville Public Safety Complex, RFQ #142-25-EPW-RFQ, and authorize staff to negotiate and finalize Guaranteed Maximum Price (GMP) for Phase I of the construction services in an amount of $7,752,389 for earthwork, utilities, generator allowance, and CMAR fee. (Enterprise Project Management Office)**

Kimberly Salinas, Capital Improvement Projects Manager, with the Enterprise Project Management Department, presented an overview of key milestones for Bid Package 1 of the Public Safety Complex, which includes utilities, earthwork, generators, CMAR fees, and general requirements. She noted that in August the City Commission approved Noble Texas Builders as the construction manager at risk, establishing a guaranteed maximum price of $66.8 million and an overall project cap of $80 million. Construction plans were finalized in April, bids were solicited and evaluated in May, and Noble Texas Builders recommended Mid Valley Paving as the best-value subcontractor for all bid components.

DRAFT

Ms. Salinas emphasized that the proposed amendment does not increase the previously approved GMP and finalizes the amount for Bid Package 1 at $7,752,389, leaving approximately $72 million for Bid Package 2, which will include the building and is expected to come before the commission in August. If approved, the amendment would be executed in July with a notice to proceed issued immediately afterward, setting Bid Package 1 construction completion for spring 2027 and an overall project completion target of fall 2028.

Brief discussion among the City Commission and City staff.

Motion: Motion made by Commissioner Pedro Cardenas, seconded by Commissioner Linda C. Macias to amend the phased contract with Noble Texas Builders for Construction Manager at Risk (CMAR) Services for the Brownsville Public Safety Complex, RFQ #142-25-EPW-RFQ, and authorize staff to negotiate and finalize Guaranteed Maximum Price (GMP) for Phase I of the construction services in an amount of $7,752,389 for earthwork, utilities, generator allowance, and CMAR fee. The vote was cast 5 for, 0 against [Martinez and De Leon absent]. The motion carried unanimously.

2) **Consideration and ACTION on SECOND READING on Ordinance Number 2026-235.130, to amend the City of Brownsville Unified Development Code (UDC, Article 4 – Zoning Regulations, Section 4.6 – Zoning Development Standards, Subsection 4.6.3 – Landscaping; Article 5 – Supplemental Regulations, Section 5.1 – Tree Preservation, Subsection 5.1.2 – Applicability and Exemptions, Subsection 5.1.3 – Categories of Preserved Trees, Subsection 5.1.4 – Tree Mitigation, Subsection 5.1.8 – Removal of a Protected Tree Without a Tree Removal Permit) to adopt updated landscaping and tree-preservation regulations; and dealing with related matters, as shown in Exhibit "A". (Planning & Redevelopment Department)**

Martin Vega of the Planning and Redevelopment Department presented revisions to the landscape and tree preservation ordinance following concerns raised at the June 2 City Commission meeting, explaining that the amendment modernizes landscape standards, promotes native and drought resistant plants, strengthens tree preservation requirements, and clarifies enforcement. He noted the removal of an irrigation plan exemption to align with the Texas Administrative Code and outlined updates establishing fixed mitigation fees while maintaining existing ratios for protected and heritage trees.

Maribel Guerrero, Engineering and Public works Director, reviewed benchmarking from several Texas cities, leading to a recommended mitigation fee of $200 per caliper inch and an illegal removal penalty of $400 per caliper inch, ensuring fairness, consistency, and defensible enforcement.

Commissioners asked whether Planning and Engineering had the staffing capacity to enforce treep reservation requirements, including site inspections prior to land clearing; staff confirmed they do, using trained personnel to identify protected and heritage trees within five days of a clearcut permit request.

Commissioners also asked how violations would be enforced, and staff explained that damaged or illegally removed trees are documented on site, fines issued through Code Enforcement, and unresolved penalties handled through Municipal Court.

Alex Aguilar, Greens Supervisor, clarified ongoing protection for protected and heritage trees beyond the current two year post occupancy window. Mr. Aguilar described procedures for site inspections, tree identification, permit processing, and enforcement, confirming that staff can meet operational needs and that violations are addressed through coordination with Code Enforcement and Municipal Court.

DRAFT

Motion: Motion made by Commissioner Nurith Galosnky, seconded by Commissioner Pedro Cardenas to approved second and final reading for Ordinance Number 2026-235.130. The vote was cast 7 for, 0 against. The motion carried unanimously.

BOARD APPOINTMENT(S)

1) **Discussion and ACTION to acknowledge compliance with the required boards and commissions Personal Financial Statement (PFS) filings as mandated by the Code of Ethics, Chapter 38 of the Code of Ordinances. (Office of the City Secretary / Office of the City Attorney)**

Mayra Rios, City Secretary, provided an ethics compliance update for Chapter 38 of the City's Code of Ordinances, outlining annual filing requirements for City Commission members, the City Manager, City Auditor, City Attorney, and members of several boards, including GBEDC, BCIC, BPUB, Planning and Zoning, and the Building and Standards and Zoning Board of Adjustments. She noted that filings are due each year by April 30 at 5 p.m., with an available 15day extension, upon request. Ms. Rios reported full compliance across all bodies except the Building and Standards and Zoning Board of Adjustments, where three members had not submitted their required forms despite certified letter notifications and coordination with board liaisons.

Commissioners asked whether the appointees had been contacted and whether reappointments could occur immediately

Ms. Rios noted that communication had been made with board liaisons and certified letters were mailed to the members who had not submitted their reports.

Will Trevino, City Attorney, advised that any replacements must be placed on a future agenda.

Commissioners agreed to add the matter to the next meeting to consider reappointment or appointment of new members to fill the unexpired terms.

Motion: Motion made by Commissioner Bryan L. Martinez, seconded by Commissioner Pedro Cardenas to acknowledge compliance with the required boards and commissions Personal Financial Statement (PFS). The vote was cast 7 for, 0 against. The motion carried unanimously.

2) **Consideration and ACTION on Resolution Number 2026-084 to appoint or reappoint members to the Brownsville Public Library System Advisory Board. (Library)**

The appointment for Commissioner Linda C. Macias was tabled for the next City Commission meeting.

3) **Consideration and ACTION on Resolution Number 2026-061B to appoint or reappoint members to the Animal Regulation and Care Advisory Committee (ARCAC). (Department of Health, Wellness & Animal Services)**

Motion: Motion made by Commissioner Pedro Cardenas seconded by Commissioner Bryan L. Matinez, to reappoint ***Marcela Montemayor-Morris,*** as a member of the Animal Regulation and Care Advisory Committee. The vote was cast 7 for, 0 against. The motion carried unanimously.

4) **Consideration and ACTION on Resolution Number 2026-68 to appoint or reappoint members to the Bicycle & Pedestrian Advisory Committee (BPAC). (Multimodal Transportation)**

DRAFT

Motion: Motion made by Commissioner Gustavo De Leon seconded by Commissioner Pedro Cardenas, to appoint ***Francisco Galvan,*** as a member of the Bicycle & Pedestrian Advisory Committee. The vote was cast 7 for, 0 against. The motion carried unanimously.

5) **Consideration and ACTION on Resolution Number 2026-075 to appoint members to the Charter Review Committee. (Office of the City Attorney/ City Secretary's Office)**

No Action.

6) **Consideration and ACTION on Resolution Number 2026-076B to appoint or reappoint members to the Brownsville Border Film Commission. (Convention and Visitors Bureau Department)**

Motion: Motion made by Commissioner Pedro Cardenas seconded by Commissioner Tino Villarreal, to reappoint ***Juan Becerra,*** as a member of the Brownsville Border Film Commission. The vote was cast 7 for, 0 against. The motion carried unanimously.

7) **Consideration and ACTION on Resolution Number 2026-077B to appoint or reappoint members to the Brownsville Convention & Visitors Bureau (BCVB). (Convention and Visitors Bureau Department)**

Motion: Motion made by Commissioner Pedro Cardenas seconded by Commissioner Tino Villarreal, to reappoint ***Arturo Guerra,*** as a member of the Brownsville Border Film Commission. The vote was cast 7 for, 0 against. The motion carried unanimously.

8) **Consideration and ACTION on Resolution Number 2026-081B to appoint or reappoint member(s) to the Ethics Advisory Commission. (Office of the City Secretary)**

Motion: Motion made by Commissioner Pedro Cardenas seconded by Commissioner Tino Villarreal, to reappoint ***Cesar De Leon,*** as a member of the Ethics Advisory Commission. The vote was cast 7 for, 0 against. The motion carried unanimously.

Motion: Motion made by Commissioner Nurith Galosnky seconded by Commissioner Bryan L. Martinez, to appoint ***Sara Stapleton Barrera,*** as a member of the Ethics Advisory Commission. The vote was cast 7 for, 0 against. The motion carried unanimously.

9) **Consideration and ACTION on Resolution Number 2026-082B to appoint or reappoint members to the Parks & Recreation Advisory Committee. (Parks & Recreation Department)**

Motion: Motion made by Commissioner Pedro Cardenas seconded by Commissioner Bryan L. Martinez, to appoint ***Joan Rodriguez,*** as a member of the Parks & Recreation Advisory Committee. The vote was cast 7 for, 0 against. The motion carried unanimously.

Commissioner Tino Villarreal requests that the final appointees and their respective terms for the board be recorded in the official minutes.

PRESENT MEMBERS	***APPOINTED DATE:***	***TERM EXPIRES:***	***APPOINTED BY:***
Luciana Morales	*1/20/2026*	*6/30/2027*	*MAYOR*
Tito Mata	*7/11/2023*	*6/30/2027*	*AT-LARGE "A"*
Scanda Galicia	*6/2/2026*	*6/30/2028*	*AT-LARGE "B"*
Rodrigo Quintero	*8/5/2025*	*6/30/2027*	*DISTRICT 1*

DRAFT

Julio Martinez	*1/3/2026*	*6/30/2027*	*DISTRICT 2*
Gilbert Rodriguez	*6/2/2026*	*6/30/2028*	*DISTRICT 3*
Joan A. Rodriguez	*6/16/2026*	*6/30/2028*	*DISTRICT 4*

10) **Consideration and ACTION on Resolution Number 2026-083B appointing member(s) to the Paseo De La Resaca Lighting and Landscaping Maintenance District Service Plan Board (PASEO). (Office of the City Secretary)**

Motion: Motion made by Commissioner Pedro Cardenas seconded by Commissioner Bryan L. Martinez, to reappoint ***Dino Chavez,*** as a member of the Paseo De La Resaca Lighting and Landscaping Maintenance District Service Plan Board (PASEO). The vote was cast 6 for, 0 against. [Galonsky absent] The motion carried unanimously.

The appointment for Commissioner Gustavo De Leon was tabled for the next City Commission meeting.

11) **Consideration and ACTION on Resolution Number 2026-097 to appoint a member to fill an unexpired term on the Special Needs Advisory Board (SNAB). (Parks & Recreation Department)**

Motion: Motion made by Commissioner Tino Villarreal seconded by Commissioner Bryan L. Matinez, to appoint ***Debbie Ann Perez,*** as a member of the Special Needs Advisory Board (SNAB). The vote was cast 6 for, 0 against [Galonsky absent]. The motion carried unanimously.

EXECUTIVE SESSION

Motion: Motion made by Commissioner Tino Villarreal, seconded by Commissioner Bryan L. Martinez to convene into Executive Session at 6:21 p.m. The vote was cast 6 for, 0 against [Galonsky absent]. The motion carried unanimously.

1) **Closed session pursuant to Tex. Gov't. Code Sections 551.071 (Consultation with Attorney) and 551.074 (Personnel Matters) to deliberate the appointment, employment, or duties of a public officer or employee, pertaining to the city manager. (City Commission/ Office of the City Attorney/ OD&HR Department)**
2) **Closed session pursuant to Tex. Gov't. Code Section 551.074 (Personnel Deliberation) related to City Attorney Performance Evaluation. (City Commission/ OD&HR Department)**
3) **Closed session pursuant to Tex. Gov't. Code Sections 551.071 (Consultation with Attorney), 551.072 (Deliberation regarding real property) and 551.087 (Deliberation regarding Economic Development Negotiations) regarding United Soccer League (USL). (Office of the City Attorney/ City Manager's Office)**
4) **Closed session pursuant to Tex. Gov't. Code Sections 551.071 (Consultation with Attorney), 551.072 (Real Property Deliberation), and 551.087 (Economic Development Deliberation) related to Project Hot Rod. (Office of the City Attorney/ City Manager's Office)**
5) **Closed session pursuant to Tex. Gov't. Code Section 551.071 (Consultation with Attorney) related to Project FBO. (Office of the City Attorney/ City Manager's Office)**
6) **Closed session pursuant to Tex. Gov't. Code Section 551.071 (Consultation with Attorney) related to Collective Bargaining Agreement with Brownsville Police Officers' Association, Charter 290577-01. (Office of the City Attorney/ City Manager's Office)**

DRAFT

7) **Closed session pursuant to Tex. Gov't. Code Section 551.071 (Consultation with Attorney, including Contemplated or Pending Litigation and/or Settlement Offer) related to CCAD Property ID 30393. (Office of the City Attorney/ City Manager's Office)**

All items scheduled for discussion in the Executive Session were addressed, and a certified agenda was maintained.

Upon the conclusion of the Executive Session, Mayor John Cowen Jr. reconvened the Regular Meeting at 10:07 pm.

POSSIBLE ACTION ON ANY ITEM(S) AS DISCUSSED IN EXECUTIVE SESSION

1) **Consideration and ACTION, if any, related to the appointment or employment of a city manager, and authorizing the Mayor to negotiate and execute a contract with the appointed individual. (City Commission/ Office of the City Attorney/ OD&HR Department)**

Motion: Motion made by Commissioner Nurith Galonsky, seconded by Commissioner Tino Villarreal to authorize the mayor to negotiate a two-year employment contract with Alan Guard to serve as City Manager. The vote was cast 7 for, 0 against. The motion carried unanimously.

2) **Consideration and ACTION, if any, related to the City Attorney Performance Evaluation. (City Commission/ OD&HR Department)**

Motion: Motion made by Commissioner Bryan L. Martinez, seconded by Commissioner Linda C. Macias, to proceed as discussed in executive session. The vote was cast 7 for, 0 against. The motion carried unanimously.

3) **Consideration and ACTION, if any, related to the Collective Bargaining Agreement with the Brownsville Police Officers' Association, Charter 290577-01. (Office of the City Attorney/ City Manager's Office)**

No Action.

4) **Consideration and ACTION, if any, related to CCAD Property ID 30393. (Office of the City Attorney/ City Manager's Office)**

No Action.
Mayra Rios City Secretary noted for the record that Commissioner Gustavo De Leon recused himself on this item.

5) **Consideration and ACTION, if any, on Resolution Number 2026-080 related to Project FBO. (Office of the City Attorney/ City Manager's Office)**

No Action.

6) **Consideration and ACTION, if any, on Resolution Number 2026-088 related to Project Hot Rod. (Office of the City Attorney/ City Manager's Office)**

No Action.

DRAFT

ADJOURNMENT

There being no further business to come before the Commission, upon duly made motion the meeting adjourned at 10:09 p.m.

Approved 21st day of July, 2026.

John Cowen, Jr.
Mayor

ATTEST:

Mayra A. Rios
City Secretary

Respectfully submitted by:
Blanca E. Gonzalez,
Administrative Assistant, MPA, TRMC
Office of the City Secretary

DRAFT

THE STATE OF TEXAS §
CITY OF BROWNSVILLE §
COUNTY OF CAMERON §

MINUTES of a **Regular Meeting** of the City Commission of the City of Brownsville, Texas, held on **Tuesday, July 7, 2026**, at **5:00 p.m.** at the **City Commission Chambers,** located at **1001 East Elizabeth Street** and **via Webex Teleconference Meeting by logging on at:**

https://brownsvilletx.webex.com/brownsvilletx/j.php?MTID=mb0f8d1240d8f166059ae34c036f78f88

The following City Commission members were present:

JOHN COWEN, JR.	**Mayor**
COMMISSIONERS:	
NURITH GALONSKY	**At-Large "B"**
BRYAN L. MARTINEZ	**District 1**
LINDA C. MACIAS	**District 2**
GUSTAVO DE LEÓN	**District 3**
PEDRO E. CARDENAS	**District 4**

The following City Commission members were absent:

TINO VILLARREAL	**At-Large "A"**

The following staff members were present:

ALAN GUARD	**City Manager**
FELIX SAUCEDA	**Deputy City Manager/Chief of Police**
WILL TREVINO	**City Attorney**
JENNIFER AVENDANO	**First Assistant City Attorney**
MARINA ZOLEZZI	**Interim Assistant City Manager**
EFREN TRUJILLO	**Interim Chief of Staff**
MAYRA A. RIOS	**City Secretary**

The following staff members were absent:

DOROTEO GARCIA	**Deputy City Manager**

CALL TO ORDER

a) ROLL CALL

DRAFT

A quorum being present, Mayra Rios, City Secretary, read the call to order to consider the matters as posted and filed for the record in the Office of the City Secretary pursuant to the Texas Open Meetings Act.

Mayor John Cowen, Jr., called the meeting to order at 5:00 p.m.

Mayor John Cowen, Jr., Commissioner Bryan L. Martinez, Commissioner Gustavo De Leon, and Commissioner Pedro Cardenas.

At 05:01 p.m., Commissioner Linda C. Macias attended the meeting in person.

At 05:06 p.m., Commissioner Nurith Galonsky attended the meeting in person.

b) INVOCATION

Alicia Justilian delivered the invocation.

PLEDGE OF ALLEGIANCE TO THE FLAGS OF THE UNITED STATES OF AMERICA AND STATE OF TEXAS

The Pledge of Allegiance to the United States Flag and the Texas Flag was led by Member of the Troop 11 Larry Jokl, Mayor and City Commission.

PROCLAMATION(S)

1) **Recognizing "Parks and Recreation Month" (Commissioner G. De Leon; Commissioner B. Martinez)**

Commissioner Linda C. Macias recognizes and commends the Parks and Recreation Department for its vital role in enhancing residents' quality of life through the management of parks, trails, recreational facilities, and inclusive programming that promotes health, community connection, and long-term equitable growth.

2) **Recognizing "The Brownsville Fire Department" (Commissioner G. De Leon; Commissioner B. Martinez)**

Commissioner Gustavo De Leon recognizes and commends the Brownsville Fire Department for its exceptional courage, professionalism, and dedication demonstrated during the two major fire emergencies on June 15, 2026, exemplifying the highest standards of public safety and service to the community.

3) **Recognizing the "Brownsville Dynamite Volleyball Club" (Commissioner N. Galonsky; Mayor J. Cowen)**

Commissioner Nurith Galonsky recognizes and commends the Brownsville Dynamite Volleyball Club 13 and Up Team for their outstanding dedication, exemplary sportsmanship, and championship achievement during the 2025–2026 season, proudly representing the community and bringing honor to the City of Brownsville.

DRAFT

PUBLIC COMMENT PERIOD

Antinio Caldwell, 3130 Creekwood Dr. Brownsville, Texas, requests the City Commission of Brownsville to prioritize animal welfare by investing in staffing, resources, and modern facilities to address the city's growing animal service needs and strengthen public health, safety, and community well-being.

Yolanda Speece, 305 W. Madison St., Brownsville, Texas, addressed the Commission regarding concerns related to the City of Brownsville's meeting procedures.

Rose Applegate, 134 Bates St, Brownsville, Texas, expressed neighborhood concerns regarding delayed brush and junk collection, increased towing-vehicle traffic affecting safety on narrow residential streets, and the need for clear communication on when these issues will be addressed.

Diablo Velez, 1254 E. Tyler St., Brownsville, Texas, addressed the Commission to express concerns regarding local and federal government regulations.

PRESENTATION(S)

1) Review and Comparison of Organizational Culture Assessment Results: 2024 vs. 2025

Perla Cepeda, Chief People Officer for Organizational Development and Human Resources, presented a comprehensive update on the City of Brownsville's ongoing culture, engagement, and workforce-development initiatives spanning from 2018 through 2026. She outlined the progression from early organizational needs assessments to the implementation of full culture evaluations, noting substantial increases in employee engagement across all levels between 2024 and 2025. Cepeda emphasized key improvements in compensation, benefits, employee wellness, leadership training, accountability practices, and professional development opportunities, all designed to strengthen the City's position as an employer of choice and support its One City philosophy focused on building an inclusive, high-performing workplace.

Members of the City Commission expressed appreciation for the Human Resources team's dedication and highlighted the positive impact these initiatives have had across the organization's 1,300 employees. Commissioners praised the administration's commitment to investing in people, reinforcing workplace excellence, and maintaining a supportive culture where employees feel valued and engaged. They reaffirmed their continued support for HR's efforts and recognized the collaborative momentum that has contributed to improved engagement, stronger leadership effectiveness, and a work environment rooted in service, accountability, and community pride.

CITY MANAGER UPDATE(S)

1) Brownsville Chamber of Commerce DC Fly-In: Federal Engagement and Advocacy Update

Esmeralda Villarreal, Chief Executive Officer of the Brownsville Chamber of Commerce, provided an update on the 2026 Washington, D.C. Fly-In, emphasizing that the initiative is designed to ensure Brownsville's presence and influence in national decision-making spaces. She highlighted the Chamber's long-standing role in representing more than 500 businesses and noted recent milestones, including the return to the Texas Capitol and the Chamber's first federal advocacy trip. Villarreal explained that the goal moving forward is to establish a sustained culture of advocacy, strengthen relationships with federal stakeholders, and align the business community, local

DRAFT

government, education, healthcare, and regional partners under a shared federal agenda that supports long-term competitiveness.

She thanked the mayor and commissioners for their early support and invited them to continue partnering with the Chamber by helping reach businesses across all districts and encouraging participation in the federal priorities survey. Ms.Villarreal reiterated that economic development begins with long-term collaboration and strategic engagement, not just ribbon-cuttings, and affirmed the Chamber's commitment to representing Brownsville where key decisions are made. Additional remarks from Chamber leadership and commissioners underscored the positive outcomes of the Washington trip, including federal funding awarded to the Brownsville airport, and expressed continued support for the upcoming 2026 Fly-In.

Mark Hutcheson, Chair of the Government and International Trade Committee, offered closing remarks, thanking the mayor and commissioners and expressing confidence that, with continued support, the Chamber will surpass its goals for 2026.

Commissioners also expressed appreciation for the Chamber's work, noting the visible impact of the fly-in, including federal funding awarded to the Brownsville airport. They reiterated their support for the upcoming trip and for ongoing efforts to strengthen Brownsville's advocacy at the state and federal levels.

2) Recognizing the Office of the City Secretary for receiving the 2026 Achievement of Excellence Award from the Texas Municipal Clerks Association (TMCA).

Alan Guard City Manager recognized the Office of the City Secretary for earning the prestigious Texas Municipal Clerks Association (TMCA) Achievement of Excellence Award, a statewide honor granted to municipal clerk offices demonstrating outstanding performance in statutory compliance, transparency, records management, elections administration, innovation, professional development, and effective municipal operations.

Mayra Rios City Secretary thanked the Mayor, City Commission, and leadership staff for recognizing the Office of the City Secretary, noting that the achievement reflects the dedication and professionalism of the entire team across the Legislative Services, Vital Statistics, and Records and Information Management divisions; she emphasized the office's commitment to transparency, accountability, and excellence in serving elected officials, city departments, and residents, and expressed sincere appreciation for her team's daily integrity, hard work, and support that make this recognition possible.

3) Recognizing the Communications & Marketing Department and BrownsvilleTV for receiving the 2026 Texas Association of Municipal Information Officers (TAMIO) Award.

Alan Guard City Manager recognized and congratulated Manny Chacón and the Communications and Marketing Department, including Brownsville TV, for earning three Texas Association of Municipal Information Officers (TAMIO) Awards, highlighting excellence in municipal communications, video production, event coverage, and public information campaigns; he noted that these honors reflect the City's strong commitment to transparency, civic engagement, and high-quality storytelling across multiple platforms.

Manuel Chacon Communications and Marketing Director expressed gratitude to the Mayor, City Commission, and leadership team, commended his staff for their hard work in demanding field conditions, and acknowledged the department's ongoing dedication to serving the community through social media, television, digital media, news writing, and other communication channels, concluding with appreciation for the team members whose efforts help share Brownsville's story.

DRAFT

CONSENT AGENDA ITEM(S)

1) Consideration and **ACTION** to reject proposals for RFP No.101-26-ODHR-RFP For Temporary Staffing Services. (Procurement Department)
2) Consideration and **ACTION** to approve the quote/proposal submitted by SHI Government Solutions, Inc. for Rubrik data protection, backup, disaster recovery, cybersecurity resilience, and Microsoft 365 data protection services, in the amount of $158,288.15, as budgeted, under proposed Contract No. 289-26-IT-CP. (Information Technology Department)
3) Consideration and **ACTION** to approve the Supportive Services Program allocation for Round 2 under the U. S. Housing and Urban Development (HUD) HOME American Rescue Plan (ARP) program. (Grants and Community Development)
4) Consideration and **ACTION** to authorize an Interlocal Agreement between the City of Brownsville and TxDOT for the installation and reimbursement for the operation and maintenance of the traffic signals within a municipality. (Engineering and Public Works Department)
5) Consideration and **ACTION** to approve the proposal submitted by Roadway Asset Services, LLC (RAS), in the amount of $276,366, as budgeted, for Pavement Management Services, under proposed Contract No. 298-26-EPW-CP, for a term of nine months. (Engineering and Public Works Department)
6) Consideration and **ACTION** to authorize contracts with Ceballos Lawn Care and NVS Corporate Services for Contract No. 135-26-HLH-RFP, Mowing Services for Vacant Lot, in an estimated amount of $55,000 annually per vendor, for a term of two (2) years with one (1) optional one-year renewal. (Health, Wellness & Animal Services)
7) Consideration and **ACTION** to authorize a contract with Noble Texas Builders, LLC in the amount of $457,709.00 for Contract No. 257-26-PRK-CP, for a term of 2.5 months (approximately 75 calendar days), for improvements at Morningside Park and Brownsville Sports Park for the Parks and Recreation Department. (Parks and Recreation Department)
8) Consideration and **ACTION** on **Resolution Number 2026-108** to accept the recommendation of the Brownsville Fire Department and authorize the appointment of Assistant Chief Ismael Gamboa to the Cameron County Emergency Communication District (CCECD) Board of Directors. (Fire Department)
9) Consideration and **ACTION** to approve **Resolution Number 2026-094** approving and entering into a multi use agreement between the city of Brownsville and the Texas Department of Transportation (TXDOT) to improve five bus stops with monopoles located along the state right of way. (Brownsville Metro)
10) Consideration and **ACTION** to approve **Resolution Number 2026-098** designating an officer or employee to calculate the No-New-Revenue Tax Rate, Voter-Approval Tax Rate, and De Minimis Rate, if applicable, in accordance with section 26.04 of the Texas Tax Code for the Fiscal Year 2027 budget. (Financial Services)
11) Consideration and **ACTION** to discuss and approve **Resolution Number 2026-099** expressing official intent to reimburse with tax-exempt obligation proceeds costs associated with certain capital improvements. (Financial Services Department
12) Consideration and **ACTION** on **Resolution Number 2026-103** authorizing preparation of an updated Service and Assessment Plan (SAP) for the Paseo De La Resaca Lighting and Landscaping Maintenance Public Improvement District (PID); calling for and authorizing the publication of a Notice of Public Hearing regarding the updated SAP and levy of the PID assessments under Chapter 311, Texas Tax Code, and such other matters related thereto. (Paseo De La Resaca PID Board)
13) Consideration and **APPROVAL** on **SECOND** and **FINAL READING** of **Ordinance Number 2026-1806**, to annex into the City of Brownsville boundary limits, a property described as a 47.27-acre tract being Lot 1, Block 202, El Jardin Resubdivision, according to the map or plat thereof recorded in Volume 4, Page 48, Map Records of Cameron County, Texas, save and except all that

DRAFT

part or portion thereof conveyed to the County of Cameron in deed dated November 18, 1993, recorded in Volume 2658, Page 181, Official Records of Cameron County, Texas, located on South Dakota Avenue, Brownsville, Texas 78521, as shown in Exhibit "A". (Planning & Redevelopment Department)

14) Consideration and **APPROVAL** on **SECOND** and **FINAL READING** of **Ordinance Number 235-2026-009,** to rezone from Commercial Corridor (CC) to Residential Estate (RE) to allow a single-family residence for 2.64 acres out of 5.0 acres out of the Baldauf 10.88-acre tract out of the C.B. Hamlet 47.9-acre tract, Share 12, El Jardin Subdivision, Cameron County, Texas, located at 32 Fish Hatchery Road, Brownsville, Texas 78520, as shown in Exhibit "A". (District 4) (Planning & Redevelopment Department)

15) Consideration and **APPROVAL** on **SECOND** and **FINAL READING** of **Ordinance Number 235-2026-010**, to rezone from Residential Single-Family (R-1) to Residential Suburban (R-2) to allow a duplex for Lot 4, Block 4, McKenzie Estates Subdivision, Cameron County, Texas, located at 995 North Iowa Road, Brownsville, Texas 78521, as shown in Exhibit "A". (District 2) (Planning & Redevelopment Department)

16) Consideration and **APPROVAL** on **SECOND** and **FINAL READING** of **Ordinance Number 235-2026-011-S**, to request a Specific Use Permit (SUP) in a Commercial Corridor (CC) zoning district to allow an event center for Lot 2, Block 1, Juan Garza Subdivision Replat, Cameron County, Texas, located at 4810 Boca Chica Boulevard, Brownsville, Texas 78521, as shown in Exhibit "A". (District 1) (Planning & Redevelopment Department)

Motion: Motion was made by Commissioner Bryan L. Martinez seconded by Commissioner Pedro Cardenas to approve consent agenda items 1 through 16. The vote was cast 4 for, 0 against. [Villarreal, Galonsky and De Leon absent] The motion carried unanimously.

PUBLIC HEARING(S)

1) **Public Hearing and ACTION on FIRST READING on Ordinance Number 2026-1809 designating a +/- 1,021.48 acre area located in Cameron County, Texas, as a tax increment reinvestment zone; describing the boundaries of the zone; creating a board of directors for the zone; providing for an effective date and a termination date for the zone; naming the zone the "Estrella Reinvestment Zone Number Six, City of Brownsville"; establishing a tax increment fund; and containing other findings and provisions related thereto. (City Manager's Office)**

Jeffrey Earl initiated the public hearing for the proposed Tax Reinvestment Zone (TRZ) No. 6 associated with Project Austral, a master-planned community north of the toll road and west of the Battlefield Park, featuring approximately 898 acres of single-family, multifamily, and executive-level housing, as well as commercial space, schools, parks, and more than 30 miles of trails, with an anticipated taxable value exceeding $2 billion at full buildout.

Will Treviño City Attorney clarified that, because this TRZ is petition-initiated, state law requires the board composition to include representatives from the property owner, the county, and legislative offices, noting that the ordinance establishes these appointments and that all subsequent actions will still return to the City Commission for approval before the Commission moved forward with action on the item.

Brief discussion among the City Commission and City staff.

Mayor John Cowen Jr. opened the public hearing.

There were no speakers.

DRAFT

Motion: Motion made by Commissioner Pedro Cardenas, seconded by Commissioner Linda C. Macias to close the public hearing. The vote was cast 4 for, 0 against. [Villarreal, Galonsky and De Leon absent] The motion carried unanimously.

Motion: Motion made by Commissioner Bryan L. Martinez, seconded by Commissioner Pedro Cardenas to approved first reading on Ordinance 2026-1809. The vote was cast 5 for, 0 against. [Villarreal and Galonsky absent] The motion carried unanimously.

2) **Public Hearing and ACTION on FIRST READING on Ordinance Number 2026-1810 designating a +/- 804.13 acre area located in Cameron County, Texas, as a tax increment reinvestment zone; describing the boundaries of the zone; creating a board of directors for the zone; providing for an effective date and a termination date for the zone; naming the zone the "Greater Brownsville Tech District Reinvestment Zone Number Five, City of Brownsville"; establishing a tax increment fund; and containing other findings and provisions related thereto. (City Manager's Office)**

Ben Peña, Chairman of the Greater Brownsville EDC, introduced the first reading of the ordinance establishing Tax Increment Reinvestment Zone (TIRZ) No. 5, emphasizing that the long-planned development is projected to generate approximately $1.6 billion in taxable value, create high-paying jobs, and support advanced manufacturing growth in Brownsville.

Jeffrey Earl added that the EDC, as a City-created agency focused on job creation and investment, is partnering with Cameron County to deliver major infrastructure improvements necessary for developing the 800-acre site, including extensive earthwork and a required substation. He noted that the TIRZ enables the project's viability by offsetting substantial upfront costs, with long-term benefits including taxable value, sales tax, personal property tax, and increased utility revenue.

Brief discussion among the City Commission and City staff.

Mayor John Cowen Jr. opened the public hearing.

There were no speakers.

Motion: Motion made by Commissioner Bryan L. Martinez, seconded by Commissioner Pedro Cardenas to close the public hearing. The vote was cast 5 for, 0 against. [Villarreal and Galonsky absent] The motion carried unanimously.

Motion: Motion made by Commissioner Pedro Cardenas, seconded by Commissioner Bryan L. Martinez to approved first reading on Ordinance 2026-1810. The vote was cast 5 for, 0 against. [Villarreal and Galonsky absent] The motion carried unanimously.

ITEMS FOR INDIVIDUAL CONSIDERATION(S)

1) **Consideration and APPROVAL on SECOND and FINAL READING on Ordinance Number 2026-1807 amending Chapter 66, Municipal Court, providing for municipal court civil jurisdiction to enforce health and safety and nuisance abatement ordinances; authorizing the issuance of search and seizure warrants; providing for concurrent jurisdiction; creating a court of record, and other matters pertaining thereto. (Office of the City Attorney; Municipal Court)**

DRAFT

Will Treviño City Attorney explained that the proposed ordinance would establish the Municipal Court as a court of record, allowing concurrent jurisdiction with the district court and improving the efficiency of case handling.

Judge Rene De Coss expressed appreciation for the support from the City Manager, city leadership, and the City Attorney's Office, noting that creating a court of record has long been needed to expand jurisdiction, provide greater finality in court decisions, reduce merit-based appeals, and expedite case resolution for both residents and the City's enforcement of ordinances. He emphasized that this change will help alleviate backlogs affecting other courts and voiced his full support for the ordinance, thanking the Commission for its continued collaboration and commitment to improving municipal court operations.

Motion: Motion made by Commissioner Bryan L. Martinez, seconded by Commissioner Pedro Cardenas to approved second and final reading for Ordinance Number 2026-1807 The vote was cast 5 for, 0 against. [Villarreal and Galonsky absent] The motion carried unanimously.

2) **Consideration and ACTION on the following proposed Charter amendments for the Special Election to be held on November 3, 2026. (Charter Review Committee/ Office of the City Secretary/ Office of the City Attorney):**
   - a) **Amending Charter Art. V., Administrative Provisions, Section 13 – Compensation (Address Mayor and City Commissioner's compensation)**
   - b) **Amending Charter Art. V., Administrative Provisions, to add 21-B. - Office of the City Secretary (Creating the office)**
   - c) **Amending Charter Art. V., Administrative Provisions, to add 21-C. - Office of the City Auditor (Creating the office)**
   - d) **Amending Charter Art. V., Administrative Provisions, Section 28A. Audit and oversight committee (Increasing the membership and general clean-up)**
   - e) **Amending Charter Art. V., Administrative Provisions, to add Section 35, Municipal Campaign Finance (Requiring Commission to set by ordinance)**
   - f) **Amending Charter Art. V., Administrative Provisions, to modify Section 4. - Qualifications. (Adding tax delinquency or other liability due to City as a bar to holding office)**
   - g) **Amending Charter Art. V., Administrative Provisions, Section 3. - Vacancies (Adding automatic triggers for forfeiting office)**
   - h) **Amending Charter Art. V., Administrative Provisions, Section 3. - Vacancies (Adding discretionary triggers for forfeiting office)**
   - i) **Amending Charter Art. V., Administrative Provisions, to add Section 35, Code of Ethics; Ethics Advisory Commission (Requiring Commission to create and adopt rules by ordinance)**
   - j) **Amending Charter Art. VII., General Provisions, to add Section 3-A, - The Initiative (Adding initiative petition procedures for citizens)**
   - k) **Amending Charter Art. VII., General Provisions, to add Section 3-B, - Referendum (Adding referendum procedures for citizens)**
   - l) **Amending the Charter Art. V., Administrative Provisions, to add Section 22-B, Merit Hiring (Adding Merit principle hiring to City Charter)**
   - m) **Amending the Charter Art. I through VII, except Art. VI, Utilities Board, to revise or eliminate provisions that have been superseded by state law and to update or eliminate archaic language**

Will Treviño City Attorney presented a comprehensive report to the mayor and city commission summarizing the work of the Charter Review Committee. The committee had been tasked with

reviewing campaign finance rules, proposing updates to the city charter, addressing overdue changes related to the Audit & Oversight Committee, and evaluating elected-official compensation. To complete these responsibilities, it held five public hearings between May and June.

The committee recommended adopting compensation caps of $50,000 for city commissioners and $62,500 for the mayor. The intent was to preserve voter control and avoid automatic salary changes tied to median household income, while leaving room for the commission to modify these ceilings before placing them on the ballot.

Mr. Treviño next explained that although the charter references the city secretary, it does not formally establish the office. The committee recommended adding a provision to formally create the Office of the City Secretary and to clarify that the city commission should appoint and remove the city secretary after consultation or recommendation from the city manager. This structure is consistent with other Texas cities and aligns with state law requirements for municipal clerks.

He then outlined proposals to codify the Office of the City Auditor. Under the current system, the auditor is selected by the citizen Audit & Oversight Committee, with salary approved by the commission. The committee recommends shifting appointment and removal authority to the city commission while maintaining operational reporting lines to the Audit & Oversight Committee. Additionally, the Audit & Oversight Committee would expand from five to seven members, with each commissioner appointing one member. The committee sought to retain the ability to engage external auditors, subject to available budget.

Regarding campaign finance regulations, Treviño explained that the committee did not support locking specific contribution limits into the charter. Instead, it recommended requiring the city commission to maintain a campaign finance ordinance with disclosure requirements and contribution and spending limits that comply with state and federal law. This approach gives future commissions flexibility to adjust limits as legal standards evolve, avoiding issues like those seen in other cities, where voter-approved limits were later invalidated in court.

Mr. Treviño reviewed recommended candidate qualifications, including disqualification for delinquent personal taxes or personal debts owed to the city and for felony convictions while in office. These standards reflect qualifications upheld in other Texas cities and mirror requirements applied to municipal board appointments.

The committee also proposed adding automatic and discretionary forfeiture provisions to supplement the existing recall process. Automatic forfeiture would occur if an officeholder lost required qualifications, failed residency requirements, was convicted of a felony, accumulated excessive absences, or violated ethics-related financial interest rules. Discretionary forfeiture would apply when an official is convicted of a non-felony offense possibly involving moral turpitude. In such cases, the city attorney would petition a district court to determine whether the offense meets that standard. If it does, the commission would be required to call a recall election at the next available election date without needing a citizen petition. Any official removed through recall, conviction, or court order would thereafter be permanently barred from holding office in Brownsville.

Commissioner Bryan L. Martinez asked the city attorney for a legal opinion on whether the Ethics Advisory Commission currently adequate structure, legal parameters, and ordinance support has to fulfill the responsibilities implied by the proposed charter amendment. He expressed discomfort with granting additional authority to a commission he believes is still lacking organizational stability.

Following a brief break due to loss of quorum, the question was revisited.

Mayor John Cowen asked for clarification of the phrase "prohibited personal financial interest provisions" and how such violations are currently handled.

Mr. Treviño explained that the phrase refers to Article V, Section 4 of the charter, which prohibits elected officials and employees from having financial interests in city contracts or sales. He noted that while the restriction exists, the city currently has no designated body—aside from the Ethics Advisory Commission—to formally determine violations.

Mr. Treviño explained that the committee, after reviewing how other municipalities handle such matters, recommended empowering the Ethics Advisory Commission to make those determinations.

Addressing Commissioner Martinez's concerns, Mr. Treviño acknowledged that the Ethics Advisory Commission had operational weaknesses in the past, particularly with respect to notice requirements. He noted that revisions to Chapter 38 of the ethics code are underway, supported by a nearly full slate of commission members. He emphasized that the proposed charter amendment would strengthen the commission's permanence and accountability by requiring the existence of an ethics board and conflict-of-interest and disclosure ordinances. These requirements mirror model charter language and would prevent future commissions from dismantling the ethics framework. Citizens could pursue legal remedies, such as mandamus, if the city failed to comply.

Mr. Treviño continued by explaining additional committee recommendations based on an AI-assisted comparative analysis with model charters. These included establishing a citizen initiative process for proposing ordinances, creating a referendum process allowing citizens to challenge recently adopted ordinances (with exceptions for critical areas such as zoning, taxes, public safety, bonding, or salary ordinances), and adding merit-based hiring rules for non-civil-service employees. The merit hiring provision would require city positions to be filled based on examinations, licensure, experience, or comparable evidence of competence, with personnel policies adopted by the commission upon recommendation from the city manager.

Mr. Treviño described a "catch-all" cleanup amendment to update Articles I through VII of the charter—excluding the section concerning PUB—to remove archaic language and eliminate provisions superseded by state law. He noted that the charter still contains outdated material from early 20th-century adoption processes, as well as obsolete districting language and other preempted items.

Mayra Rios City Secretary reported that the city secretary's office is still reviewing the petition submitted on June 24. The petition, containing approximately 8,000 signatures, is being evaluated using a statistical sampling method permitted under state law for petitions exceeding 1,000 signatures. The office is reviewing a random 25% sample—2,049 signatures—generated by a third-party consultant to ensure impartiality. The election office team has been conducting the review for 19 days and expects to complete analysis soon. After reviewing the sample, the data will be forwarded to the consultant for final analysis.

Ms. Rios noted that the timing of the petition review affects the commission's ability to call a November election. If Ground Texas meets the signature threshold, the city must place its proposition on the ballot. If it does not, the commission may table second reading of the charter amendment ordinance and instead plan for a May election. She explained that Ground Texas could legally challenge a determination of insufficiency through mandamus, potentially impacting election timing.

Mr. Treviño concluded by outlining the anticipated timeline: first reading of the election-calling ordinance on July 21, final reading on August 4, and an August 17 deadline to order the November election. He confirmed that every proposed charter amendment had been reviewed and recommended by the Charter Review Committee.

Mr. Treviño requested that the commission proceed through the propositions individually and vote on each one. This meeting was not a public hearing; public input would occur during the formal election-calling process.

Motion: Motion made by Commissioner Bryan L. Martinez, seconded by Commissioner Pedro Cardenas to approved proposition "a". The vote was cast 4 for, 1 against. [De Leon against] [Villarreal and Galonsky absent] The motion carried.

Motion: Motion made by Commissioner Pedro Cardenas, seconded by Commissioner Bryan L. Martinez to approved proposition "b". The vote was cast 5 for, 0 against. [Villarreal and Galonsky absent] The motion carried unanimously.

DRAFT

Motion: Motion made by Commissioner Pedro Cardenas, seconded by Commissioner Bryan L. Martinez to approved proposition "c". The vote was cast 5 for, 0 against. [Villarreal and Galonsky absent] The motion carried unanimously.

Motion: Motion made by Commissioner Bryan L. Martinez, seconded by Commissioner Pedro Cardenas to approved proposition "d". The vote was cast 5 for, 0 against. [Villarreal and Galonsky absent] The motion carried unanimously.

Motion: Motion made by Commissioner Bryan L. Martinez, seconded by Commissioner Pedro Cardenas to approved proposition "e". The vote was cast 5 for, 0 against. [Villarreal and Galonsky absent] The motion carried unanimously.

Motion: Motion made by Commissioner Linda C. Macias, seconded by Mayor Jhon Cowen Jr. to approved proposition "i". The vote was cast 5 for, 0 against. [Villarreal and Galonsky absent] The motion carried unanimously.

Motion: Motion made by Commissioner Bryan L. Martinez, seconded by Commissioner Pedro Cardenas to approved proposition "j". The vote was cast 5 for, 0 against. [Villarreal and Galonsky absent] The motion carried unanimously.

Motion: Motion made by Commissioner Bryan L. Martinez, seconded by Commissioner Pedro Cardenas to approved proposition "k". The vote was cast 5 for, 0 against. [Villarreal and Galonsky absent] The motion carried unanimously.

Motion: Motion made by Bryan L. Martinez, seconded by Commissioner Pedro Cardenas to approved proposition "l". The vote was cast 5 for, 0 against. [Villarreal and Galonsky absent] The motion carried unanimously.

Motion: Motion made by Commissioner Pedro Cardenas, seconded by Commissioner Bryan L. Martinez to approved proposition "m". The vote was cast 5 for, 0 against. [Villarreal and Galonsky absent] The motion carried unanimously.

Charter amendment items f, g, and h were not voted on, and the commission decided not to proceed with them.

BOARD APPOINTMENT(S)

1) **Consideration and ACTION on Resolution Number 2026-076C to appoint or reappoint members to the Brownsville Border Film Commission. (Convention and Visitors Bureau Department)**

Motion: Motion made by Commissioner Pedro Cardenas seconded by Commissioner Bryan L. Martinez, to appoint ***Eddie Perez,*** as a member of the Brownsville Border Film Commission. The vote was cast 5 for, 0 against. [Villarreal and Galonsky absent] The motion carried unanimously.

2) **Consideration and ACTION on Resolution Number 2026-083C to appoint or reappoint members to the Paseo De La Resaca Lighting and Landscaping Maintenance District Service Plan Board (PASEO). (Office of the City Secretary)**

The appointment for Commissioner Gustavo De Leon was tabled for the next City Commission meeting.

3) **Consideration and ACTION on Resolution Number 2026-084 to appoint or reappoint members to the Brownsville Public Library System Advisory Board. (Library)**

DRAFT

Motion: Motion made by Commissioner Linda C. Macias seconded by Commissioner Bryan L. Martinez, to appoint ***Rosalinda Williams,*** as a member of the Brownsville Public Library System Advisory Board. The vote was cast 5 for, 0 against. [Villarreal and Galonsky absent] The motion carried unanimously.

4) **Consideration and ACTION on Resolution Number 2026-100 to appoint or reappoint members to the Transit Advisory Committee (TAC). (Brownsville Metro Department)**

The appointment for Commissioner Gustavo De Leon was tabled for the next City Commission meeting.

5) **Consideration and ACTION on Resolution Number 2026-101 for the removal and appointment of the members to the Building & Standards Commission. (Planning & Redevelopment Department)**
6) **Consideration and ACTION on Resolution Number 2026-102 for the removal and appointment of the members to the Board of Adjustment. (Planning & Redevelopment Department)**

Motion: Motion made by Commissioner Pedro Cardenas, seconded by Commissioner Linda C. Macias, to appoint ***Tony Izaguirre*** as an alternate member to the Building & Standards Commission and the Board of Adjustment. The vote was cast 5 for, 0 against. [Villarreal and Galonsky absent] The motion carried unanimously.

Motion: Motion made by Commissioner Bryan L. Martinez, seconded by Commissioner Linda C. Macias, to appoint ***Luis Melendez*** as an alternate member to the Building & Standards Commission and the Board of Adjustment. The vote was cast 5 for, 0 against. [Villarreal and Galonsky absent] The motion carried unanimously.

Motion: Motion made by Commissioner Gustavo De Leon, seconded by Commissioner Bryan L. Martinez, to appoint ***Eduardo Garrido*** as an alternate member to the Building & Standards Commission and the Board of Adjustment. The vote was cast 5 for, 0 against. [Villarreal and Galonsky absent] The motion carried unanimously.

EXECUTIVE SESSION

Motion: Motion made by Commissioner Pedro Cardenas, seconded by Commissioner Linda C. Macias to convene into Executive Session at 7:27 p.m. The vote was cast 5 for, 0 against. [Villarreal and Galonsky absent] The motion carried unanimously.

1) **Closed session pursuant to Tex. Gov't. Code Sections 551.071 (Consultation with Attorney), 551.072 (Real Property Deliberation), and 551.087 (Economic Development Deliberation) related to Project Egypt. (Office of the City Attorney/ City Manager's Office)**
2) **Closed session pursuant to Tex. Gov't. Code Sections 551.071 (Consultation with Attorney), 551.072 (Real Property Deliberation), and 551.087 (Economic Development Deliberation) related to Project Headquarters. (Office of the City Attorney/ City Manager's Office)**
3) **Closed session pursuant to Tex. Gov't. Code Sections 551.071 (Consultation with Attorney), 551.072 (Real Property Deliberation), and 551.087 (Economic Development Deliberation) related to Project Marketsquare. (Office of the City Attorney/ City Manager's Office)**
4) **Closed session pursuant to Tex. Gov't. Code Sections 551.071 (Consultation with Attorney), 551.072 (Real Property Deliberation), and 551.087 (Economic Development Deliberation) related to Project Romeo. (Office of the City Attorney/ City Manager's Office)**

DRAFT

5) **Closed session pursuant to Tex. Gov't. Code Sections 551.071 (Consultation with Attorney) and 551.087 (Economic Development Deliberation) related to Solid Waste Services. (Office of the City Attorney/ City Manager's Office)**
6) **Closed session pursuant to Tex. Gov't. Code Section 551.071 (Consultation with Attorney, including Contemplated or Pending Litigation) related to: Fire Truck Price-Fixing Litigation. (Office of the City Attorney/ City Manager's Office)**
7) **Closed session pursuant to Tex. Gov't. Code Section 551.071 (Consultation with Attorney, including Contemplated or Pending Litigation) related to: Midtown Entertainment District enforcement. (Office of the City Attorney/ City Manager's Office)**
8) **Closed session pursuant to Tex. Gov't. Code Section 551.071 (Consultation with Attorney, including Contemplated or Pending Litigation and/or Settlement Offer) related to CCAD Property ID 30393. (Office of the City Attorney/ City Manager's Office)**

All items scheduled for discussion in the Executive Session were addressed, and a certified agenda was maintained.

Upon the conclusion of the Executive Session, Mayor John Cowen Jr. reconvened the Regular Meeting at 8:58 pm.

POSSIBLE ACTION ON ANY ITEM(S) AS DISCUSSED IN EXECUTIVE SESSION

1) **Consideration and ACTION, if any, related to Resolution Number 2026-104 on Project Egypt. (Office of the City Attorney/ City Manager's Office)**

Motion: Motion made by Commissioner Bryan L. Martinez seconded by Commissioner Gustavo De Leon to approved Resolution Number 2026-104. The vote was cast 4 for, 0 against. [Villarreal, Galonsky and Macias absent] The motion carried unanimously.

2) **Consideration and ACTION, if any, related to Resolution Number 2026-107 on Project Headquarters. (Office of the City Attorney/ City Manager's Office)**

Motion: Motion made by Commissioner Bryan L. Martinez seconded by Commissioner Pedro Cardenas to approved Resolution Number 2026-107. The vote was cast 5 for, 0 against. [Villarreal, Galonsky absent] The motion carried unanimously.

3) **Consideration and ACTION, if any, related to Resolution Number 2026-106 on Project Marketsquare. (Office of the City Attorney/ City Manager's Office)**

Motion: Motion made by Commissioner Bryan L. Martinez seconded by Commissioner Pedro Cardenas to approved Resolution Number 2026-106. The vote was cast 5 for, 0 against. [Villarreal, Galonsky absent] The motion carried unanimously.

4) **Consideration and ACTION, if any, related to Resolution Number 2026-105 on Project Romeo. (Office of the City Attorney/ City Manager's Office)**

Motion: Motion made by Commissioner Bryan L. Martinez seconded by Commissioner Pedro Cardenas to approved Resolution Number 2026-108. The vote was cast 5 for, 0 against. [Villarreal, Galonsky absent] The motion carried unanimously.

DRAFT

5) **Consideration and ACTION, if any, related to Fire Truck Price-Fixing Litigation. (Office of the City Attorney/ City Manager's Office)**

No Action.

6) **Consideration and ACTION, if any, related to Midtown Entertainment District enforcement. (Office of the City Attorney/ City Manager's Office)**

Motion: Motion made by Commissioner Bryan L. Martinez seconded by Commissioner Pedro Cardenas to proceed as discussed in executive session. The vote was cast 5 for, 0 against. [Villarreal, Galonsky absent] The motion carried unanimously.

7) **Consideration and ACTION, if any, related to CCAD Property ID 30393. (Office of the City Attorney/ City Manager's Office)**

No Action.

Mayra Rios City Secretary noted for the record that Commissioner Gustavo De Leon recused himself on this item.

ADJOURNMENT

There being no further business to come before the Commission, upon duly made motion the meeting adjourned at 9:01 p.m.

Approved 21st day of July, 2026.

_____

John Cowen, Jr.
Mayor

ATTEST:

_____

Mayra A. Rios
City Secretary

Respectfully submitted by:
Blanca E. Gonzalez,
Administrative Assistant, MPA, TRMC
Office of the City Secretary

DRAFT

To:	Mayor and City Commission
Through:	Alan Guard, Interim City Manager
From:	Victoria De La LLata, Grants & Public Outreach Coordinator
Date:	Tuesday, July 21, 2026
Agenda #:	Consideration and **ACTION** to approve **Resolution Number 2026-111**, authorizing Brownsville Metro to provide free fare for Customer Appreciation Day that will be held on July 23, 2026, and finding a public purpose. (Brownsville Metro)

Summary:
Brownsville Metro seeks approval to allow free fare for Brownsville Metro's Customer Appreciation Day. The purpose of this initiative is to recognize and thank riders for their continued use of public transit, encourage community engagement, and promote awareness of Brownsville Metro services.

Project Scope and Analysis:
If approved, all fares will be waived across Brownsville Metro fixed-route bus services and Paratransit services during regular operating hours on the selected date. The fare-free implementation will apply system-wide and will not require riders to pay or validate fare for boarding. Staff will coordinate operational messaging, public notification, and internal communication to ensure a smooth transition and effective outreach prior to and during the event.

Funding:

Source: Fixed -Route Average Fare Collected
Paratransit Average Fare Collected

Amount: $3,976.04
$137.55

Local Contribution if Applicable:

Recommendation:
Brownsville Metro reccommends to approve free fare for Brownsville Metro's Customer Appreciation Day

Commission Pillar:
Quality of Life & Vibrancy

Attachments:
1. Resolution 2026-111

RESOLUTION NUMBER 2026-111

A RESOLUTION OF THE CITY COMMISSION OF THE CITY OF BROWNSVILLE, TEXAS, PROVIDING FREE SERVICE FOR ALL BROWNSVILLE METRO PASSENGERS ON JULY 23, 2026, IN HONOR OF CUSTOMER APPRECIATION DAY, AND FINDING A PUBLIC PURPOSE.

WHEREAS, the City of Brownsville, Texas (the "City") is a home rule city acting under its charter adopted by the electorate pursuant to Article XI, Section 5 of the Texas Constitution, and Chapter 9 of the Texas Local Government Code; and

WHEREAS, the City Commission of the City of Brownsville, Texas (the "City Commission") has adopted fares for Brownsville Metro public transportation; and

WHEREAS, Brownsville Metro has requested to offer free fare for Customer Appreciation Day on July 23, 2026; and

WHEREAS, the free fare would encourage people to use public transport on July 23, 2026, instead of driving to and from work, school, or errands; and

WHEREAS, public transportation is a lifeline for low-income communities, can alleviate the negative impact of air pollution, and improve the overall health and quality of life; and

WHEREAS, the City Commission finds it in the best interest of the citizens of Brownsville, Texas, to provide free service for all passengers on July 23, 2026, in honor of Customer Appreciation Day; and

WHEREAS, the City is willing to absorb these fares; and

WHEREAS, the City Commission finds that a public purpose is met by providing free service as stated herein.

NOW THEREFORE, BE IT RESOLVED BY THE CITY COMMISSION OF THE CITY OF BROWNSVILLE, TEXAS, THAT:

SECTION 1. The findings and recitations set out in the preamble to this Resolution are found to be true and correct and they are hereby adopted by the City Commission as its legislative findings and made a part hereof for all purposes.

SECTION 2. The City Commission of the City of Brownsville, Texas, hereby waives the fares for all Brownsville Metro passengers on July 23, 2026, in honor of Customer Appreciation Day.

SECTION 3. This Resolution shall be and become effective immediately upon adoption.

PASSED and **APPROVED** this 21st day of July, 2026.

ATTEST:

Mayra Rios City Secretary	John Cowen, Jr. Mayor

To:	Mayor and City Commission
Through:	Alan Guard, Interim City Manager
From:	Roberto Montalvo, Assistant Director Internal Services
Date:	Tuesday, July 21, 2026
Agenda #:	Consideration and **ACTION** to approve a contract with Nueces Farm Center, Inc. in the Amount of $482,928.23 for Contract No. 273-26-ISD-CP, for the Purchase and Delivery of an SP 33 Slip Form Paver and Related Equipment for Engineering & Public Works Department, as budgeted. (Internal Services Department)

Summary:

The Internal Services Department requests approval to contract with Nueces Farm Center, Inc. for $482,928.23 to purchase and deliver an SP 33 Slip Form Paver and related equipment. The purchase will support the City's concrete infrastructure work and includes delivery, assembly, and training. The procurement qualifies under the Cooperative Purchase Exemption per Texas Local Government Code §271.102 and is available through BuyBoard Contract #788-25.

Project Scope and Analysis:

Project Scope:

The project involves the procurement, delivery, assembly, and operator training for an SP 33 Slip Form Paver to support City concrete operations. The equipment will be utilized for sidewalk, curb, and gutter construction and maintenance, enabling the City to enhance the efficiency, consistency, and overall capacity of its concrete infrastructure projects. The scope includes:

- Purchase of the SP 33 Slip Form Paver and related equipment
- Delivery and freight services
- Assembly and setup
- On-site operator training for City staff

Project Analysis:

The Internal Services Department, in coordination with the Engineering & Public Works Department, identified an operational need for a dedicated slip form paver to reduce reliance on outside contractors and improve in-house construction productivity. The acquisition provides long-term cost

efficiency, enhanced project control, and quicker response times for infrastructure needs.
Using a cooperative purchase exemption ensures compliance with Texas Local Government Code §271.102 and leverages competitive pricing already established through BuyBoard Contract #788-25. Procurement has verified that the proposed purchase falls within the contract scope and meets all legal and procedural requirements.

The investment supports the City's strategic goals for infrastructure improvement, operational efficiency, and resource optimization.

- **Project:** Purchase and Delivery of SP 33 Slip Form Paver
- **Department:** Engineering & Public Works
- **Contract Number:** 273-26-ISD-CP
- **Vendor:** Nueces Farm Center, Inc.
- **Contract Amount:** $482,928.23
- **Procurement Method:** Cooperative Purchase (BuyBoard Contract #788-25)

Funding:

Source: 812-417-942

Amount: $482,928.23

Local Contribution if Applicable: N/A

Recommendation:

The Internal Services Department recommends that the City Commission approve a contract with Nueces Farm Center, Inc. in the amount of $482,928.23 for Contract No. 273-26-ISD-CP for the purchase and delivery of an SP 33 Slip Form Paver and related equipment, as budgeted. This acquisition will enhance the City's ability to perform sidewalk, curb, and gutter construction and maintenance in-house, improving operational efficiency and reducing reliance on contracted services. The purchase is compliant with procurement requirements and is available through BuyBoard Contract #788-25 under the Cooperative Purchase Exemption authorized by Texas Local Government Code §271.102.

Commission Pillar:

Infrastructure

Attachments:

1. Procurement Analysis 273-26-ISD-CP
2. 273-26-ISD-CP- Contract

PROCUREMENT ANALYSIS

Date: Monday, July 6, 2026
To: Mr. John Cowen Jr., City Mayor
From: Mr. Alan Guard, Interim City Manager
CC: Mr. Damian Espinoza, Procurement Director
Mr. Juan P. Villarreal, Internal Services Director

Agenda Title:
Agenda Item for the City Commission meeting of Tuesday, July 21, 2026.
"Consideration and Action to Authorize a Contract with Nueces Farm Center, Inc. in the amount of $482,928.23 for Contract No. 273-26-ISD-CP, for the Purchase and Delivery of an SP 33 Slip Form Paver and Related Equipment for the Internal Services Department."

Executive Summary:

- Department: Internal Services Department
- Exemption Type: Cooperative Purchase Exemption
- Contract Number: 273-26-ISD-CP
- Vendor: Nueces Farm Center, Inc.
- Contract Amount: $482,928.23
- Term: Purchase and Delivery

Background:
The Internal Services Department, in conjunction with the Engineering & Public Works Department, identified the need to purchase an SP 33 Slip Form Paver to support the City's sidewalk, curb, and gutter construction and maintenance operations. The equipment will improve the City's ability to complete concrete infrastructure projects efficiently while reducing reliance on contracted services. The purchase includes delivery, freight, assembly, and operator training.

Exemption Justification:
Authorized use of contracts competitively solicited and awarded by another governmental entity or cooperative organization in compliance with Texas Local Government Code §271.102.

Procurement has verified that this purchase and delivery fall under the scope of the active BuyBoard Contract #788-25.

Vendor Information:
Nueces Farm Center, Inc.
PO BOX 4789, Corpus Christi, TX 78469
Point of Contact: Ben Hernandez
Phone/Email: (316) 289-0066 | npesale@npetex.com

Exhibits & Supporting Documents:

- Exhibit A – Quote
- Exhibit B – BuyBoard Contract #788-25
- Exhibit C – Acknowledged Form 1295

Recommendation:

The Procurement Department recommends that the City Commission authorize a contract with **Nueces Farm Center, Inc.** for the purchase and delivery of an SP 33 Slip Form Paver with accessories under a BuyBoard #788-25 Cooperative Agreement in compliance with Texas Local Gov't Code §271.102.

Confidential with Personal Information

TASB Buyboard

Quotation Worksheet

Date: 6/16/2026

Distributor Name: Nueces Power Equipment
Sales Person:
Phone Number:

Price list date: 12/1/2025

Customer name: City Of Brownsville
Customer Contact:
Customer Email/Phone:

Model Discount: 18.0%
factor 82.0%

Machine Make/Model	Description	Sales Code	Factory List Price	Customer Price
		788-25		$ -
			$476,669.00	$ 390,868.58
SP 33 SLIP FORM PAVER w/ 2' BASIC TRIMMER & 1'6" EXTENSION				$ -
				$ -
				$ -
Factory Options & Attachments				$ -
Additional Set of Technical Docs US			$81.00	$ 66.42
				$ -
Non-Factory Options & Attachments				$ -
QTY 6 STRAIGHT VIBRATORS				$ 9,243.86
1' trimmer head extension				$ 7,690.00
FULLY HYDRAULIC PREMIUM MOLD EXTENSION				$ 13,210.00
BASIC C&G MOLD UP TO 32"				$ 4,932.39
HOPPER FOR C&G MOLD				$ 2,412.00
STRING-LINE KIT				$ 4,252.26
1'6" TRIMMER HEAD EXTENSION FOR TOTAL 6'				$ 8,323.82
4', 5', & 6' VARIABLE SIDEWALK MOLD W/ Removable Plates				$ 19,277.00
				$ -
				$ -
Machine sale Price				$ 460,276.33
Shop Manuals, freight, assembly & training				
Factory Freight				$12,000.00
Local Delivery				$2,500.00
PDI & Training				$7,200.00
		Sub Total		**$ 481,976.33**
Contract ends 11-30-25		**Additional Discount/Trade in**		0
Validity 60 days		**Heavy Equipment Tax**	0.001975	$ 951.90
Delivery 30-180 DAY ARO				
FOB Customers Yard		**Total Sale Price**		$482,928.23

P.O. Box 400, Austin, Texas 78767
800.695.2919 • info@buyboard.com • buyboard.com

Electronic Delivery

Ben Hernandez
Nueces Farm Center, Inc. dba Nueces Power Equipment
5201 US Hwy 59 N
Victoria, TX 77905

Welcome to BuyBoard!

Re: *Notice of The Local Government Purchasing Cooperative Contract Award;* Proposal Invitation No. 788-25, Construction, Road and Bridge, and Other Related Equipment

Congratulations, The Local Government Purchasing Cooperative (Cooperative) has awarded your company a BuyBoard® contract based on the above-referenced Proposal Invitation. The contract is effective for an initial one-year term of December 1, 2025 through November 30, 2026, and may be subject to two possible one-year renewals. Please refer to the Proposal Invitation for the contract documents, including the General Terms and Conditions of the Contract.

To review the items your company has been awarded, please review Proposal Tabulation No. 788-25 at: www.buyboard.com/vendor. Only items marked as awarded to your company are included in this contract award, and only those awarded items may be sold through the BuyBoard contract. All sales must comply with the contract terms and must be at or below the awarded pricing as set forth in the General Terms and Conditions.

A list of Cooperative members is available on the buyboard.com website. In addition, the BuyBoard Administrator's vendor relations staff is available to assist you in locating available BuyBoard informational resources and answering questions you may have as an awarded BuyBoard vendor.

On behalf of the Cooperative, we appreciate your interest in the Cooperative and we are looking forward to your participation in the program. If you have any questions, feel free to contact me at bids@buyboard.com.

Sincerely,

Stacy Finn

Stacy Finn, Bid Analyst
Texas Association of School Boards, Inc.,
Administrator for The Local Government Purchasing Cooperative

Electronic Delivery

Ben Hernandez
Nueces Farm Center, Inc. dba Nueces Power Equipment
5201 US Hwy 59 N
Victoria, TX 77905

Welcome to BuyBoard!

Re: *Notice of National Purchasing Cooperative Award;* Proposal Invitation No. 788-25, Construction, Road and Bridge, and Other Related Equipment

Congratulations, The National Purchasing Cooperative (National Cooperative) has awarded your company a BuyBoard® contract based on the above-referenced Proposal Invitation. The contract is effective for an initial one-year term of December 1, 2025 through November 30, 2026, and may be subject to two possible one-year renewals. Please refer to the Proposal Invitation for the contract documents, including the National Purchasing Cooperative Vendor Award Agreement and General Terms and Conditions of the Contract.

To review the items your company has been awarded, please review Proposal Tabulation No. 788-25 at www.buyboard.com/vendor. Only items marked as awarded to your company are included in this contract award, and only those awarded items may be sold through the BuyBoard contract. All sales must comply with the contract terms and must be at or below the awarded pricing as set forth in the General Terms and Conditions.

A list of National Cooperative members is available on the buyboard.com website. In addition, the BuyBoard Administrator's vendor relations staff is available to assist you in locating available BuyBoard informational resources and answering questions you may have as an awarded BuyBoard vendor.

On behalf of the National Cooperative, we are looking forward to your participation in the program. If you have any questions, feel free to contact me at bids@buyboard.com.

Sincerely,

Stacy Finn

Stacy Finn, Bid Analyst
Texas Association of School Boards, Inc.,
Administrator for the National Purchasing Cooperative

v.01.03.2025

PROPOSER'S ACCEPTANCE AND AGREEMENT

Proposal Invitation Name Construction, Road and Bridge, and Other Related Equipment	**Proposal Due Date/Opening Date and Time** July 17, 2025, at 4:00 PM
Proposal Invitation Number 788-25	**Location of Proposal Opening** Texas Association of School Boards, Inc. BuyBoard Department 12007 Research Blvd. Austin, TX 78759
Contract Term December 1, 2025, through November 30, 2026, with two possible one-year renewals.	**Anticipated Cooperative Board Meeting Date** October 2025

By signature below, the undersigned acknowledges and agrees that you are authorized to submit this Proposal, including making all acknowledgements, consents, and certifications herein, on behalf of Proposer and, to the best of your knowledge, the information provided is true, accurate, and complete.

Nueces Power Equipment
Name of Proposing Company

07/07/2025
Date

7510 IH 37 Access Road
Street Address

Ben Hernandez
Signature of Authorized Company Official

Corpus Christi, TX 78408
City, State, Zip

Ben Hernandez
Printed Name of Authorized Company Official

361-289-0066
Telephone Number of Authorized Company Official

General Manager
Position or Title of Authorized Company Official

361-576-1141
Fax Number of Authorized Company Official

74-1649707
Federal ID Number

PROPOSAL FORMS PART 1: COMPLIANCE FORMS

INSTRUCTIONS:

Proposer must review and complete all forms in this Proposal Forms Part 1:

- Proposal Acknowledgements
- Felony Conviction Disclosure
- Resident/Nonresident Certification
- Debarment Certification
- Vendor Employment Certification
- No Boycott Verification
- No Excluded Nation or Foreign Terrorist Organization Certification
- Historically Underutilized Business Certification
- Acknowledgement of BuyBoard Technical Requirements
- Construction-Related Goods and Services Affirmation
- Deviation and Compliance
- Vendor Consent for Name Brand Use
- Confidential/Proprietary Information
- EDGAR Vendor Certification
- Compliance Forms Signature Page

An authorized representative of Proposer *must initial in the bottom right corner of each page* where indicated and complete and sign the Compliance Forms Signature Page. Proposer's failure to fully complete, initial, and sign forms as required may result in your Proposal being rejected as non-responsive.

PROPOSAL ACKNOWLEDGEMENTS

The proposing company ("you" or "your") hereby acknowledges and agrees as follows:

1. You have carefully examined and understand all information and documentation associated with this Proposal Invitation, including the Instructions to Proposers, General Information, General Terms and Conditions, attachments/forms, appendices, item specifications, and line items (collectively "Requirements");
2. By your response ("Proposal") to this Proposal Invitation, you propose to supply the products or services submitted at the pricing quoted in your Proposal and in strict compliance with the Requirements, unless specific deviations or exceptions are noted in the Proposal;
3. By your Proposal, you acknowledge and certify all items set forth in the General Terms and Conditions, Section B.12 (Certifications), including all non-collusion certifications and certifications regarding legal, ethical, and other matters set forth therein.
4. Any and all deviations and exceptions to the Requirements have been noted in your Proposal on the required form and no others will be claimed;

Initial: BSH

5. If the Cooperative accepts any part of your Proposal and awards you a Contract, you will furnish all awarded products or services at the pricing quoted and in strict compliance with the Requirements (unless specific deviations or exceptions are noted on the required form and accepted by the Cooperative), including without limitation the Requirements related to:
   a. conducting business with Cooperative members, including offering pricing to members that is the best you offer compared to similarly situated customers in similar circumstances;
   b. payment of a service fee in the amount specified and as provided for in this Proposal Invitation;
   c. the **possible** award of a piggy-back contract by the National Purchasing Cooperative or nonprofit entity, in which event you will offer the awarded products and services in accordance with the Requirements; and
   d. submitting price sheets or catalogs in the proper format as required by the Cooperative as a prerequisite to activation of your Contract;
6. You have clearly identified on the included form any information in your Proposal that you believe to be confidential or proprietary or that you do not consider to be public information subject to public disclosure under the Texas Public Information Act or similar public information law;
7. The individual submitting this Proposal is duly authorized to enter into the contractual relationship represented by this Proposal Invitation on your behalf and bind you to the Requirements, and such individual (and any individual signing a form or Proposal document) is authorized and has the requisite knowledge to provide the information and make the representations and certifications required in the Requirements;
8. You have carefully reviewed your Proposal, and certify that all information provided is true, complete, and accurate to the best of your knowledge, and you authorize the Cooperative to take such action as it deems appropriate to verify such information; and
9. Any misstatement, falsification, or omission in your Proposal, whenever or however discovered, will be grounds for disqualifying you from consideration for a contract award under this Proposal Invitation, termination of a contract award, or any other remedy or action provided for in the General Terms and Conditions or by law.

FELONY CONVICTION DISCLOSURE

Subsection (a) of Section 44.034 of the Texas Education Code (Notification of Criminal History of Contractor) states: "A person or business entity that enters into a contract with a school district must give advance notice to the district if the person or an owner or operator has been convicted of a felony. The notice must include a general description of the conduct resulting in the conviction of a felony."

Section 44.034 further states in Subsection (b): "A school district may terminate a contract with a person or business entity if the district determines that the person or business entity failed to give notice as required by Subsection (a) or misrepresented the conduct resulting in the conviction. The district must compensate the person or business entity for services performed before the termination of the contract."

Please check (√) one of the following:

☐ My company is a publicly-held corporation. (Advance notice requirement does not apply to publicly-held corporation.)
☒ My company is not owned or operated by anyone who has been convicted of a felony.
☐ My company is owned/operated by the following individual(s) who has/have been convicted of a felony:

Name of Felon(s): _____

Details of Conviction(s): _____

_____

Initial: BSH

RESIDENT/NONRESIDENT CERTIFICATION

Chapter 2252, Subchapter A, of the Texas Government Code establishes certain requirements applicable to proposers who are not Texas residents. Under the statute, a "resident" proposer is a person whose principal place of business is in Texas, including a contractor whose ultimate parent company or majority owner has its principal place of business in Texas. A "nonresident" proposer is a person who is not a Texas resident. Please indicate the status of your company as a "resident" proposer or a "nonresident" proposer under these definitions.

Please check (√) one of the following:

☒ I certify that my company is a **Resident Proposer.**
☐ I certify that my company is a **Nonresident Proposer.**

If your company is a Nonresident Proposer, you must provide the following information for your resident state (the state in which your company's principal place of business is located):

Company Name _____ Address _____

City _____ State _____ Zip Code _____

A. Does your resident state require a proposer whose principal place of business is in Texas to under-price proposers whose resident state is the same as yours by a prescribed amount or percentage to receive a comparable contract?

☐ Yes ☐ No

B. What is the prescribed amount or percentage? $_____ or _____%

DEBARMENT CERTIFICATION

By signature on the Compliance Forms Signature Page, I certify that neither my company nor an owner or principal of my company has been debarred, suspended or otherwise made ineligible for participation in Federal Assistance programs under Executive Order 12549, "Debarment and Suspension," as described in the Federal Register and Rules and Regulations. Neither my company nor an owner or principal of my company is currently listed on the government-wide exclusions in SAM, debarred, suspended, or otherwise excluded by agencies or declared ineligible under any statutory or regulatory authority. My company agrees to immediately notify the Cooperative and all Cooperative members with pending purchases or seeking to purchase from my company if my company or an owner or principal is later listed on the government-wide exclusions in SAM, or is debarred, suspended, or otherwise excluded by agencies or declared ineligible under any statutory or regulatory authority.

VENDOR EMPLOYMENT CERTIFICATION

Section 44.031(b) of the Texas Education Code establishes certain criteria that a school district must consider when determining to whom to award a contract. Among the criteria for certain contracts is whether the vendor or the vendor's ultimate parent or majority owner (i) has its principal place of business in Texas; or (ii) employs at least 500 people in Texas. If neither your company nor the ultimate parent company or majority owner has its principal place of business in Texas, does your company, ultimate parent company, or majority owner employ at least 500 people in Texas?

Please check (√) one of the following:

☒ Yes ☐ No

Initial: BSH

NO BOYCOTT VERIFICATION

A Texas governmental entity may not enter into a contract with a value of $100,000 or more that is to be paid wholly or partly from public funds with a company (excluding a sole proprietorship) that has 10 or more full-time employees for goods or services unless the contract contains a written verification from the company that it: (1) does not boycott Israel and will not boycott Israel during the term of the contract (TEX. GOV'T CODE Ch. 2271), (2) does not boycott energy companies and will not boycott energy companies during the term of the contract (TEX. GOV'T CODE Ch. 2276), and (3) does not have a practice, policy, guidance, or directive that discriminates against a firearm entity or firearm trade association and will not discriminate during the term of the contract against a firearm entity or firearm trade association (TEX. GOV'T CODE Ch. 2274). Accordingly, this certification form is included to the extent required by law.

"Boycott Israel" means refusing to deal with, terminating business activities with, or otherwise taking any action that is intended to penalize, inflict economic harm on, or limit commercial relations specifically with Israel, or with a person or entity doing business in Israel or in an Israeli-controlled territory, but does not include an action made for ordinary business purposes. TEX. GOV'T CODE §808.001(1).

"Boycott energy company" means, without an ordinary business purpose, refusing to deal with, terminating business activities with, or otherwise taking any action that is intended to penalize, inflict economic harm on, or limit commercial relations with a company because the company: (A) engages in the exploration, production, utilization, transportation, sale, or manufacturing of fossil fuel-based energy and does not commit or pledge to meet environmental standards beyond applicable federal and state law; or (B) does business with a company described by Paragraph (A). TEX. GOV'T CODE §809.001(1).

"Discriminate against a firearm entity or firearm trade association" means, (A) with respect to the entity or association, to: (i) refuse to engage in the trade of any goods or services with the entity or association based solely on its status as a firearm entity or firearm trade association; (ii) refrain from continuing an existing business relationship with the entity or association based solely on its status as a firearm entity or firearm trade association; or (iii) terminate an existing business relationship with the entity or association based solely on its status as a firearm entity or firearm trade association; and (B) does not include: (i) the established policies of a merchant, retail seller, or platform that restrict or prohibit the listing or selling of ammunition, firearms, or firearm accessories; and (ii) a company's refusal to engage in the trade of any goods or services, decision to refrain from continuing an existing business relationship, or decision to terminate an existing business relationship: (aa) to comply with federal, state, or local law, policy, or regulations or a directive by a regulatory agency; or (bb) for any traditional business reason that is specific to the customer or potential customer and not based solely on an entity's or association's status as a firearm entity or firearm trade association. TEX. GOV'T CODE §2274.001(3).

By signature on the Compliance Forms Signature Page, to the extent applicable, I certify and verify that Vendor does not boycott Israel, boycott energy companies, or discriminate against a firearm entity or firearm trade association and will not do so during the term of any contract awarded under this Proposal Invitation, that this certification is true, complete and accurate, and that I am authorized by my company to make this certification.

Initial: BSH

NO EXCLUDED NATION OR FOREIGN TERRORIST ORGANIZATION CERTIFICATION

Chapter 2252 of the Texas Government Code provides that a Texas governmental entity may not enter into a contract with a company engaged in active business operations with Sudan, Iran, or a foreign terrorist organization – specifically, any company identified on a list prepared and maintained by the Texas Comptroller under Texas Government Code §§806.051, 807.051, or 2252.153. (A company that the U.S. Government affirmatively declares to be excluded from its federal sanctions regime relating to Sudan, Iran, or any federal sanctions regime relating to a foreign terrorist organization is not subject to the contract prohibition.)

By signature on the Compliance Forms Signature Page, I certify and verify that Vendor is not on the Texas Comptroller's list identified above; that this certification is true, complete and accurate; and that I am authorized by my company to make this certification.

HISTORICALLY UNDERUTILIZED BUSINESS CERTIFICATION

A Proposer that has been certified as a Historically Underutilized Business (also known as a Minority/Women Business Enterprise or "MWBE" and all referred to in this form as a "HUB") is encouraged to indicate its HUB certification status when responding to this Proposal Invitation. The BuyBoard website will indicate HUB certifications for awarded Vendors that properly indicate and document their HUB certification on this form. *(Please check (√) all that apply)*

☐ I certify that my company has been certified as a HUB in the following categories:

☐ **Minority Owned Business** ☐ **Women Owned Business**
☐ **Service-Disabled Veteran Owned Business (veteran defined by 38 U.S.C. §101(2), who has a service-connected disability as defined by 38 U.S.C. § 101(16), and who has a disability rating of 20% or more as determined by the U. S. Department of Veterans Affairs or Department of Defense)**

Certification Number: _____

Name of Certifying Agency: _____

☒ My company has **NOT** been certified as a HUB.

ACKNOWLEDGEMENT OF BUYBOARD TECHNICAL REQUIREMENTS

Vendor shall review the BuyBoard Technical Requirements included in this Proposal Invitation. By signature on the Compliance Forms Signature Page, the undersigned affirms that Proposer has obtained a copy of the BuyBoard Technical Requirements, has read and understands the requirements, and certifies that Vendor is able to meet and will comply with those requirements except as follows: *[List and explain BuyBoard Technical Requirements, if any, to which your company **cannot** or will **not** comply.]*

Note: In accordance with the General Terms and Conditions of the Contract, to the extent Vendor is awarded a Contract under this Proposal Invitation but is unable or unwilling to meet the applicable BuyBoard Technical Requirements, the information available on the BuyBoard for Vendor's awarded products or services may be limited, potentially placing Vendor at a disadvantage and impacting the ability of Cooperative members to search, find, review, and purchase Vendor's awarded products and services on the BuyBoard website. Further, to the extent Vendor has acknowledged ability to meet and comply with the BuyBoard Technical Requirements, any subsequent failure or refusal by Vendor to promptly provide information upon request to the Cooperative administrator in accordance with those technical requirements may be deemed an event of default under the Contract. **Initial:** BSH

CONSTRUCTION-RELATED GOODS AND SERVICES AFFIRMATION

The Cooperative issued the BuyBoard Procurement and Construction-Related Goods and Services Advisory for Texas Members ("Advisory"), which provides information specifically relevant to the procurement of construction-related goods and services by Texas Cooperative members. The Advisory, available at buyboard.com/Vendor/Resources.aspx, provides an overview of certain legal requirements that are potentially relevant to a Cooperative member's procurement of construction or construction-related goods and services, including those for projects that may involve or require architecture, engineering or independent testing services. A copy of the Advisory can also be provided upon request. Because many BuyBoard contracts include goods or installation services that might be considered construction-related, Proposer must make this Construction Related-Goods and Services Affirmation regardless of type of goods or services associated with this Proposal Invitation.

A contract awarded under this Proposal Invitation covers only the specific goods and/or services awarded by the Cooperative. As explained in the Advisory ("Advisory"), **Texas law prohibits the procurement of architecture or engineering services through a purchasing cooperative. This Proposal Invitation and any Contract awarded thereunder does not include such services. Architecture or engineering services must be procured by a Cooperative member separately, in accordance with the Professional Services Procurement Act (Chapter 2254 of the Texas Government Code) and other applicable law and local policy.**

By signature on the Compliance Forms Signature Page, Proposer affirms that Proposer has obtained a copy of the Advisory, has read and understands the Advisory, and is authorized by Proposer to make this affirmation. If Proposer sells construction-related goods or services to a Cooperative member under a Contract awarded under this Proposal Invitation, Proposer will comply with the Advisory and applicable legal requirements, make a good faith effort to make its Cooperative member customers or potential Cooperative member customers aware of such requirements, and provide a Cooperative member with a copy of the Advisory before accepting the member's Purchase Order or other agreement for construction-related goods or services.

Initial: BSH

DEVIATION AND COMPLIANCE

If your company intends to deviate from the General Terms and Conditions, Proposal Specifications or other requirements associated with this Proposal Invitation, you MUST list all such deviations on this form, and provide complete and detailed information regarding the deviations on this form or an attachment to this form. **Prior to completing this form, Vendor shall review the General Terms and Conditions section B.4 (Deviations from Item Specifications and General Terms and Conditions). Please note that, as provided in section B.4, certain provisions of the General Terms and Conditions are NOT subject to deviation, and certain deviations will be deemed rejected without further action by the Cooperative. Any attempted deviation, whether directly or indirectly, to provisions identified in this Proposal Invitation as not subject to deviation shall be deemed rejected by the Cooperative and, unless otherwise withdrawn by Vendor, may result in Vendor's Proposal being rejected in its entirety.**

The Cooperative will consider any deviations in its contract award decision and reserves the right to accept or reject a proposal based upon any submitted deviation.

In the absence of any deviation identified and described in accordance with the above, your company must fully comply with the General Terms and Conditions, Proposal Specifications and all other requirements associated with this Proposal Invitation if awarded a Contract under this Proposal Invitation. A deviation will not be effective unless accepted by the Cooperative. The Cooperative, by and through the Cooperative administrator, may, in its sole discretion, seek clarification from and/or communicate with Proposer(s) regarding any submitted deviation, consistent with general procurement principles of fair competition. The Cooperative reserves the right to accept or reject a Proposal based upon any submitted deviation.

Please check (√) one of the following:

☒ **No**; Deviations
☐ **Yes**; Deviations

List and fully explain any deviations you are submitting:

_____

_____

_____

_____

_____

_____

_____

_____

_____

_____

Initial: BSH

VENDOR CONSENT FOR NAME BRAND USE

BuyBoard members seeking to make purchases using a Contract awarded under this Proposal Invitation may view information regarding awarded Vendors, including but not limited to product catalogs, price lists, pricing, and Proposals, through the BuyBoard website. To improve and enhance the experience of BuyBoard members seeking to procure goods and services under the Contract utilizing the BuyBoard website, any Vendor logo, product images, and similar brand and trademark information provided by Vendor for purposes of the Contract ("Vendor Information") may be posted on the BuyBoard website.

You acknowledge that, by submitting your Proposal, unless you specifically opt out below, you consent to use of your company's Vendor Information on the BuyBoard website if awarded a Contract. You further acknowledge that whether, where, and when to include the Vendor Information on the BuyBoard website shall be at the sole discretion of the BuyBoard Administrator. Vendor retains, however, the right of general quality control over the BuyBoard Administrator's authorized display of proprietary Vendor Information. Neither the BuyBoard nor its administrator will be responsible for the use or distribution of Vendor Information by BuyBoard members or any other third party using the BuyBoard website. This Vendor Consent shall be effective for the full term of the Contract, including renewals, unless Vendor provides a signed, written notice revoking consent to contractadmin@buyboard.com. BuyBoard shall have up to thirty days from the date of receipt of a termination or revocation of a Vendor Consent to remove Vendor information from the BuyBoard website.

This Vendor Consent is subject to the Terms and Conditions of the Contract, including, but not limited to, those terms pertaining to Disclaimer of Warranty and Limitation of Liability, Indemnification, and Intellectual Property Infringement.

Vendor logo files must be submitted in one of the formats set forth in the BuyBoard Technical Requirements. Proposers are requested to submit this information with Vendor's Proposal. (This consent shall not authorize use of your company's Vendor Information by BuyBoard if your company is not awarded a Contract.)

OPT OUT:

If your company wishes to opt out of the Vendor Consent for Name Brand Use, you must check the opt out box below. *DO NOT select this box unless your company is opting out of this Vendor Consent for Name Brand Use.*

☐ By checking this box, Vendor hereby declines to provide consent for use of Vendor Information (as defined herein) on the BuyBoard website. **By opting out, Vendor acknowledges and agrees that, if Vendor is awarded a Contract under this Proposal Invitation, information available on the BuyBoard for Vendor's awarded products or services may be limited, potentially placing Vendor at a disadvantage and impacting the ability of Cooperative members to search, find, review, and purchase Vendor's awarded products and services on the BuyBoard website.**

Initial: BSH

CONFIDENTIAL/PROPRIETARY INFORMATION

A. Public Disclosure Laws

All Proposals, forms, documentation, catalogs, price lists, or other materials submitted by Vendor to the Cooperative in response to this Proposal Invitation, may be subject to the disclosure requirements of the Texas Public Information Act (Texas Government Code chapter 552.001, *et. seq.*) or similar disclosure law. Proposer must clearly identify on this form any information in its Proposal (including forms, documentation, or other materials submitted with the Proposal) that Proposer considers proprietary or confidential. If Proposer fails to properly identify the information, the Cooperative shall have no obligation to notify Vendor or seek protection of such information from public disclosure should a member of the public or other third party request access to the information under the Texas Public Information Act or similar disclosure law. When required by the Texas Public Information Act or other disclosure law, Proposer may be notified of any third-party request for information in a Proposal that Proposer has identified in this form as proprietary or confidential.

Does your Proposal (including forms, documentation, catalogs, price lists, or other materials submitted with the Proposal) contain information which Vendor considers proprietary or confidential?

Please check (√) one of the following:

☐ **NO**, I certify that none of the information included with this Proposal is considered confidential or proprietary.

☒ **YES**, I certify that this Proposal contains information considered confidential or proprietary and all such information is specifically identified on this form.

If you responded "YES", you must clearly identify below the specific information you consider confidential or proprietary. List each page number, form number, or other information sufficient to make the information readily identifiable. The Cooperative and Cooperative administrator shall not be responsible for a Proposer's failure to clearly identify information considered confidential or proprietary. Further, by submitting a Proposal, Proposer acknowledges that the Cooperative and Cooperative administrator will disclose information when required by law, even if such information has been identified herein as information Vendor considers confidential or proprietary.

Confidential / Proprietary Information:

Catalog Pricelists submitted in this proposal are confidential and proprietary

(Attach additional sheets if needed.)

Initial: BSH

B. Copyright Information

Does your Proposal (including forms, documentation, price lists, catalogs, or other materials submitted with the Proposal) contain copyright information?

Please check (√) one of the following:

☒ **NO,** Proposal (including forms, documentation, price lists, catalogs, or other materials submitted with the Proposal) does not contain copyright information.

☐ **YES,** Proposal (including forms, documentation, price lists, catalogs, or other materials submitted with the Proposal) does contain copyright information.

If you responded "YES", clearly identify below the specific documents or pages containing copyright information.

Copyright Information: _____

_____

_____

_____

(Attach additional sheets if needed.)

C. Consent to Release Confidential/Proprietary/Copyright Information to BuyBoard Members

BuyBoard members (Cooperative and nonprofit members) seeking to make purchases through the BuyBoard may wish to view information included in the Proposals of awarded Vendors. If you identified information on this form as confidential, proprietary, or subject to copyright, and you are awarded a BuyBoard contract, your acceptance of the BuyBoard contract award constitutes your consent to the disclosure of such information to BuyBoard members, including posting of such information on the secure BuyBoard website for members. Note: Neither the Cooperative nor Cooperative administrator will be responsible for the use or distribution of information by BuyBoard members or any other party.

D. Consent to Release Proposal Tabulation

Notwithstanding anything in this Confidential/Proprietary Information form to the contrary, by submitting a Proposal, Vendor consents and agrees that, upon Contract award, the Cooperative may publicly release, including posting on the public BuyBoard website, a copy of the proposal tabulation and award information for the Contract including Vendor name; proposed catalog/price list name(s); proposed percentage discount(s), hourly labor rate(s), or other specified pricing; and Vendor award or non-award information.

Initial: BSH

EDGAR VENDOR CERTIFICATION
(2 CFR Part 200 and Appendix II)

When a Cooperative member seeks to procure goods and services using funds under a federal grant or contract, specific federal laws, regulations, and requirements may apply in addition to those under state law. This includes, but is not limited to, the procurement standards of the Uniform Administrative Requirements, Cost Principles and Audit Requirements for Federal Awards, 2 CFR 200 (sometimes referred to as the "Uniform Guidance" or new "EDGAR"). All Vendors submitting a Proposal must complete this EDGAR Certification Form regarding Vendor's willingness and ability to comply with certain requirements which ***may*** be applicable to specific Cooperative member purchases using federal grant funds. Completed forms will be made available to Cooperative members for their use while considering their purchasing options when using federal grant funds. Cooperative members may also require Vendors to enter into ancillary agreements, in addition to the terms and conditions of the BuyBoard contract, to address the member's specific contractual needs, including contract requirements for a procurement using federal grants or contracts.

For <u>each</u> of the items below, Vendor should certify Vendor's agreement and ability to comply, where applicable, by having Vendor's authorized representative check the applicable boxes, initial each page, and sign the Compliance Forms Signature Page. If you fail to complete any item in this form, the Cooperative will consider and may list the Vendor's response on the BuyBoard as "NO," the Vendor is unable or unwilling to comply. A "NO" response to any of the items may, if applicable, impact the ability of a Cooperative member to purchase from the Vendor using federal funds.

1. Vendor Violation or Breach of Contract Terms:

Contracts for more than the simplified acquisition threshold, which is the inflation adjusted amount determined by the Civilian Agency Acquisition Council and the Defense Acquisition Regulations Council (Councils) as authorized by 41 USC 1908, must address administrative, contractual, or legal remedies in instances where contractors violate or breach contract terms, and provide for such sanctions and penalties as appropriate.

Provisions regarding Vendor default are included in the BuyBoard General Terms and Conditions, including Section E.18, Remedies for Default and Termination of Contract. Any Contract award will be subject to such BuyBoard General Terms and Conditions, as well as any additional terms and conditions in any Purchase Order or Cooperative member ancillary contract agreed upon by Vendor and the Cooperative member which must be consistent with and protect the Cooperative member at least to the same extent as the BuyBoard Terms and Conditions. The remedies under the Contract are in addition to any other remedies that may be available under law or in equity. By submitting a Proposal, you agree to these Vendor violation and breach of contract terms.

■ **YES**, I agree. ☐ **NO**, I do not agree.

2. Termination for Cause or Convenience:

For any Cooperative member purchase or contract in excess of $10,000 made using federal funds, you agree that the following term and condition shall apply:

The Cooperative member may terminate or cancel any Purchase Order under this Contract at any time, with or without cause, by providing seven (7) business days advance written notice to the Vendor. If this Agreement is terminated in accordance with this Paragraph, the Cooperative member shall only be required to pay Vendor for goods or services delivered to the Cooperative member prior to the termination and not otherwise returned in accordance with Vendor's return policy. If the Cooperative member has paid Vendor for goods or services not yet provided as of the date of termination, Vendor shall immediately refund such payment(s).

If an alternate provision for termination of a Cooperative member purchase for cause and convenience, including the manner by which it will be effected and the basis for settlement, is included in the Cooperative member's Purchase Order or ancillary agreement agreed to by the Vendor, the Cooperative member's provision shall control.

■ **YES**, I agree. ☐ **NO**, I do not agree. **Initial:** BSH

3. Equal Employment Opportunity:

Except as otherwise provided under 41 CFR Part 60, all Cooperative member purchases or contracts that meet the definition of "federally assisted construction contract" in 41 CFR Part 60-1.3 shall be deemed to include the equal opportunity clause provided under 41 CFR 60-1.4(b), in accordance with Executive Order 11246, "Equal Employment Opportunity" (30 FR 12319, 12935, 3 CFR Part, 1964-1965 Comp., p. 339), as amended by Executive Order 11375, "Amending Executive Order 11246 Relating to Equal Employment Opportunity," and implementing regulations at 41 CFR Part 60, "Office of Federal Contract Compliance Programs, Equal Employment Opportunity, Department of Labor."

The equal opportunity clause provided under 41 CFR 60-1.4(b) is hereby incorporated by reference. Vendor agrees that such provision applies to any Cooperative member purchase or contract that meets the definition of "federally assisted construction contract" in 41 CFR Part 60-1.3 and Vendor agrees that it shall comply with such provision.

■ **YES**, I agree. ☐ **NO**, I do not agree.

4. Davis-Bacon Act:

When required by Federal program legislation, Vendor agrees that, for all Cooperative member prime construction contracts/purchases in excess of $2,000, Vendor shall comply with the Davis-Bacon Act (40 USC 3141-3144, and 3146-3148) as supplemented by Department of Labor regulations (29 CFR Part 5, "Labor Standards Provisions Applicable to Contracts Covering Federally Financed and Assisted Construction"). In accordance with the statute, Vendor is required to pay wages to laborers and mechanics at a rate not less than the prevailing wages specified in a wage determinate made by the Secretary of Labor. In addition, Vendor shall pay wages not less than once a week.

Current prevailing wage determinations issued by the Department of Labor are available at www.sam.gov. Vendor agrees that, for any purchase to which this requirement applies, the award of the purchase to the Vendor is conditioned upon Vendor's acceptance of the wage determination.

Vendor further agrees that it shall also comply with the Copeland "Anti-Kickback" Act (40 USC 3145), as supplemented by Department of Labor regulations (29 CFR Part 3, "Contractors and Subcontractors on Public Building or Public Work Financed in Whole or in Part by Loans or Grants from the United States"). The Act provides that each contractor or subrecipient must be prohibited from inducing, by any means, any person employed in the construction, completion, or repair of public work, to give up any part of the compensation to which he or she is otherwise entitled.

■ **YES**, I agree. ☐ **NO**, I do not agree.

5. Contract Work Hours and Safety Standards Act:

Where applicable, for all Cooperative member contracts or purchases in excess of $100,000 that involve the employment of mechanics or laborers, Vendor agrees to comply with 40 USC 3702 and 3704, as supplemented by Department of Labor regulations (29 CFR Part 5). Under 40 USC 3702 of the Act, Vendor is required to compute the wages of every mechanic and laborer on the basis of a standard work week of 40 hours. Work in excess of the standard work week is permissible provided that the worker is compensated at a rate of not less than one and a half times the basic rate of pay for all hours worked in excess of 40 hours in the work week.

The requirements of 40 USC 3704 are applicable to construction work and provide that no laborer or mechanic must be required to work in surroundings or under working conditions which are unsanitary, hazardous or dangerous. These requirements do not apply to the purchases of supplies or materials or articles ordinarily available on the open market, or contracts for transportation or transmission of intelligence.

■ **YES**, I agree. ☐ **NO**, I do not agree.

Initial: BSH

6. Right to Inventions Made Under a Contract or Agreement:

If the Cooperative member's Federal award meets the definition of "funding agreement" under 37 CFR 401.2(a) and the recipient or subrecipient wishes to enter into a contract with a small business firm or nonprofit organization regarding the substitution of parties, assignment or performance or experimental, developmental, or research work under that "funding agreement," the recipient or subrecipient must comply with the requirements of 37 CFR Part 401, "Rights to Inventions Made by Nonprofit Organizations and Small Business Firms Under Government Grants, Contracts and Cooperative Agreements," and any implementing regulations issued by the awarding agency.

Vendor agrees to comply with the above requirements when applicable.

■ **YES**, I agree. ☐ **NO**, I do not agree.

7. Clean Air Act and Federal Water Pollution Control Act:

Clean Air Act (42 USC 7401-7671q.) and the Federal Water Pollution Control Act (33 USC 1251-1387), as amended – Contracts and subgrants of amounts in excess of $150,000 must contain a provision that requires the non-Federal award to agree to comply with all applicable standards, orders, or regulations issued pursuant to the Clean Air Act (42 USC 7401-7671q.) and the Federal Water Pollution Control Act, as amended (33 USC 1251-1387). Violations must be reported to the Federal awarding agency and the Regional Office of the Environmental Protection Agency (EPA).

When required, Vendor agrees to comply with all applicable standards, orders, or regulations issued pursuant to the Clean Air Act and the Federal Water Pollution Control Act.

■ **YES**, I agree. ☐ **NO**, I do not agree.

8. Debarment and Suspension:

Debarment and Suspension (Executive Orders 12549 and 12689) – A contract award (see 2 CFR 180.220) must not be made to parties listed on the government-wide exclusions in the System for Award Management (SAM), in accordance with the OMB guidelines at 2 CFR 180 that implement Executive Orders 12549 (3 CFR Part 1966 Comp. p. 189) and 12689 (3 CFR Part 1989 Comp. p. 235), "Debarment and Suspension." SAM Exclusions contains the names of parties debarred, suspended, or otherwise excluded by agencies, as well as parties declared ineligible under statutory or regulatory authority other than Executive Order 12549.

Vendor certifies that Vendor is not currently listed on the government-wide exclusions in SAM, is not debarred, suspended, or otherwise excluded by agencies or declared ineligible under statutory or regulatory authority other than Executive Order 12549. Vendor further agrees to immediately notify the Cooperative and all Cooperative members with pending purchases or seeking to purchase from Vendor if Vendor is later listed on the government-wide exclusions in SAM, or is debarred, suspended, or otherwise excluded by agencies or declared ineligible under statutory or regulatory authority other than Executive Order 12549.

■ **YES**, I agree. ☐ **NO**, I do not agree.

9. Byrd Anti-Lobbying Amendment:

Byrd Anti-Lobbying Amendment (31 USC 1352) - Vendors that apply or bid for an award exceeding $100,000 must file the required certification. Each tier certifies to the tier above that it will not and has not used Federal appropriated funds to pay any person or organization for influencing or attempting to influence an officer or employee of any agency, a member of Congress, officer or employee of Congress, or an employee of a member of Congress in connection with obtaining any Federal contract, grant or any other award covered by 31 USC 1352. Each tier must also disclose any lobbying with non-Federal funds that takes place in connection with obtaining any Federal award. Such disclosures are forwarded from tier to tier up to the non-Federal award. As applicable, Vendor agrees to file all certifications and disclosures required by, and otherwise comply with, the Byrd Anti-Lobbying Amendment (31 USC 1352).

■ **YES**, I agree. ☐ **NO**, I do not agree.

Initial: BSH

10. Procurement of Recovered Materials:

For Cooperative member purchases utilizing Federal funds, Vendor agrees to comply with Section 6002 of the Solid Waste Disposal Act, as amended by the Resource Conservation and Recovery Act where applicable and provide such information and certifications as a Cooperative member may require to confirm estimates and otherwise comply. The requirements of Section 6002 include procuring only items designated in guidelines of the Environmental Protection Agency (EPA) at 40 CFR Part 247 that contain the highest percentage of recovered materials practicable, consistent with maintaining a satisfactory level of competition, where the purchase price of the item exceeds $10,000 or the value of the quantity acquired during the preceding fiscal year exceeded $10,000; procuring solid waste management services in a manner that maximizes energy and resource recovery, and establishing an affirmative procurement program for procurement of recovered materials identified in the EPA guidelines.

■ **YES**, I agree. ☐ **NO**, I do not agree.

11. Domestic Preferences for Procurements:

Where appropriate and consistent with law, 2 CFR §200.322 contains certain considerations for domestic preferences for procurements which may be applicable to Cooperative members using federal funds. When required by a Cooperative member, Vendor agrees to provide such information or certification as may reasonably be requested by the Cooperative member regarding Vendor's products, including whether goods, products, or materials are produced in the United States.

■ **YES**, I agree. ☐ **NO**, I do not agree.

12. Prohibition on Certain Telecommunications and Video Surveillance Services or Equipment

2 CFR §200.216 prohibits expending federal loan or grant funds to procure or obtain covered telecommunications equipment or services. To the extent applicable and when required by a Cooperative member, Vendor agrees to provide such information or certification as may reasonably be requested by the Cooperative member to confirm whether any telecommunications equipment or services provided by Vendor is covered telecommunications equipment or services under 2 CFR §200.216.

■ **YES**, I agree. ☐ **NO**, I do not agree.

13. General Compliance and Cooperation with Cooperative Members:

In addition to the foregoing specific requirements, Vendor agrees, in accepting any Purchase Order from a Cooperative member, it shall make a good faith effort to work with Cooperative members to provide such information and to satisfy such requirements as may apply to a particular Cooperative member purchase or purchases including, but not limited to, applicable recordkeeping and record retention requirements.

■ **YES**, I agree. ☐ **NO**, I do not agree.

Initial: BSH

COMPLIANCE FORMS SIGNATURE PAGE

By initialing pages and by signature below, I certify that I have reviewed the following forms; that the information provided therein is true, complete, and accurate; and that I am authorized by my company to make all certifications, consents, acknowledgements, and agreements contained herein:

- Proposal Acknowledgements
- Felony Conviction Disclosure
- Debarment Certification
- Resident/Nonresident Certification
- Vendor Employment Certification
- No Boycott Verification
- No Excluded Nation or Foreign Terrorist Organization Certification
- Historically Underutilized Business Certification
- Construction-Related Goods and Services Affirmation
- Acknowledgement of BuyBoard Technical Requirements
- Deviation and Compliance
- Vendor Consent for Name Brand Use
- Confidential/Proprietary Information
- EDGAR Vendor Certification

Nueces Power Equipment

Company Name

Ben Hernandez

Signature of Authorized Company Official

Ben Hernandez General Manager

Printed Name and Title

07/07/2025

Date

PROPOSAL FORMS PART 2: VENDOR INFORMATION FORMS

INSTRUCTIONS:

Proposer must completely and accurately provide all information requested in the following Vendor Information Forms or your Proposal may be rejected as non-responsive:

- Vendor Business Name
- Vendor Contact Information
- Federal and State/Purchasing Cooperative Experience
- Governmental References
- Company Profile
- Texas Regional Service Designation
- State Service Designation
- National Purchasing Cooperative Vendor Award Agreement *(Vendors serving outside Texas only)*
- Local/Authorized Seller Listings
- Manufacturer Dealer Designation
- Proposal Invitation Questionnaire

To the extent any information requested is not applicable to your company, you must so indicate on the form.

VENDOR BUSINESS NAME

By submitting a Proposal, Vendor is seeking to enter into a legal contract with the Cooperative. As such, Vendor must be an individual or legal business entity capable of entering into a binding contract.

Name of Proposing Company:

Nueces Farm Center, Inc.

*(List the **legal** name of the company seeking to contract with the Cooperative. Do **NOT** list an assumed name, dba, aka, etc. here. Such information may be provided below. If you are submitting a joint proposal with another entity to provide the same proposed goods or services, each submitting entity should complete a separate vendor information form. Separately operating legal business entities, even if affiliated entities, which propose to provide goods or services separately must submit their own Proposals.)*

Please check (√) one of the following:

Type of Business: ☐ Individual/Sole Proprietor ■ Corporation ☐ Limited Liability Company ☐ Partnership

☐ Other (Specify: _____)

State of Incorporation (if applicable): Delaware

Federal Employer Identification Number: 74-1649707
*(Vendor must include a completed **IRS W-9** form with their Proposal)*

Name by which Vendor, if awarded, wishes to be identified on the BuyBoard: *(Note: If different than the Name of Proposing Company listed above, only valid trade names (dba, aka, etc.) of the Proposing Company may be used and a copy of your Assumed Name Certificate(s), if applicable, must be attached.)*

Nueces Power Equipment

Form **W-9**
(Rev. March 2024)
Department of the Treasury
Internal Revenue Service

Request for Taxpayer Identification Number and Certification

Go to *www.irs.gov/FormW9* for instructions and the latest information.

Give form to the requester. Do not send to the IRS.

Before you begin. For guidance related to the purpose of Form W-9, see *Purpose of Form*, below.

Print or type. See *Specific Instructions* on page 3.

1 Name of entity/individual. An entry is required. (For a sole proprietor or disregarded entity, enter the owner's name on line 1, and enter the business/disregarded entity's name on line 2.)

NUECES FARM CENTER, INC.

2 Business name/disregarded entity name, if different from above.

NUECES POWER EQUIPMENT

3a Check the appropriate box for federal tax classification of the entity/individual whose name is entered on line 1. Check only **one** of the following seven boxes.

☐ Individual/sole proprietor ☑ C corporation ☐ S corporation ☐ Partnership ☐ Trust/estate

☐ LLC. Enter the tax classification (C = C corporation, S = S corporation, P = Partnership) . . . . .

Note: Check the "LLC" box above and, in the entry space, enter the appropriate code (C, S, or P) for the tax classification of the LLC, unless it is a disregarded entity. A disregarded entity should instead check the appropriate box for the tax classification of its owner.

☐ Other (see instructions)

4 Exemptions (codes apply only to certain entities, not individuals; see instructions on page 3):

Exempt payee code (if any)

Exemption from Foreign Account Tax Compliance Act (FATCA) reporting code (if any)

(Applies to accounts maintained outside the United States.)

3b If on line 3a you checked "Partnership" or "Trust/estate," or checked "LLC" and entered "P" as its tax classification, and you are providing this form to a partnership, trust, or estate in which you have an ownership interest, check this box if you have any foreign partners, owners, or beneficiaries. See instructions . . . . . ☐

5 Address (number, street, and apt. or suite no.). See instructions.

PO BOX 4789

Requester's name and address (optional)

6 City, state, and ZIP code

CORPUS CHRISTI, TX 78469

7 List account number(s) here (optional)

Part I Taxpayer Identification Number (TIN)

Enter your TIN in the appropriate box. The TIN provided must match the name given on line 1 to avoid backup withholding. For individuals, this is generally your social security number (SSN). However, for a resident alien, sole proprietor, or disregarded entity, see the instructions for Part I, later. For other entities, it is your employer identification number (EIN). If you do not have a number, see *How to get a TIN*, later.

Note: If the account is in more than one name, see the instructions for line 1. See also *What Name and Number To Give the Requester* for guidelines on whose number to enter.

Social security number

			–			–				

or

Employer identification number

7	4	–	1	6	4	9	7	0	7

Part II Certification

Under penalties of perjury, I certify that:

1. The number shown on this form is my correct taxpayer identification number (or I am waiting for a number to be issued to me); and
2. I am not subject to backup withholding because (a) I am exempt from backup withholding, or (b) I have not been notified by the Internal Revenue Service (IRS) that I am subject to backup withholding as a result of a failure to report all interest or dividends, or (c) the IRS has notified me that I am no longer subject to backup withholding; and
3. I am a U.S. citizen or other U.S. person (defined below); and
4. The FATCA code(s) entered on this form (if any) indicating that I am exempt from FATCA reporting is correct.

Certification instructions. You must cross out item 2 above if you have been notified by the IRS that you are currently subject to backup withholding because you have failed to report all interest and dividends on your tax return. For real estate transactions, item 2 does not apply. For mortgage interest paid, acquisition or abandonment of secured property, cancellation of debt, contributions to an individual retirement arrangement (IRA), and, generally, payments other than interest and dividends, you are not required to sign the certification, but you must provide your correct TIN. See the instructions for Part II, later.

Sign Here | **Signature of U.S. person** Annette Alaniz **Date** 1/1/2025

General Instructions

Section references are to the Internal Revenue Code unless otherwise noted.

Future developments. For the latest information about developments related to Form W-9 and its instructions, such as legislation enacted after they were published, go to *www.irs.gov/FormW9*.

What's New

Line 3a has been modified to clarify how a disregarded entity completes this line. An LLC that is a disregarded entity should check the appropriate box for the tax classification of its owner. Otherwise, it should check the "LLC" box and enter its appropriate tax classification.

New line 3b has been added to this form. A flow-through entity is required to complete this line to indicate that it has direct or indirect foreign partners, owners, or beneficiaries when it provides the Form W-9 to another flow-through entity in which it has an ownership interest. This change is intended to provide a flow-through entity with information regarding the status of its indirect foreign partners, owners, or beneficiaries, so that it can satisfy any applicable reporting requirements. For example, a partnership that has any indirect foreign partners may be required to complete Schedules K-2 and K-3. See the Partnership Instructions for Schedules K-2 and K-3 (Form 1065).

Purpose of Form

An individual or entity (Form W-9 requester) who is required to file an information return with the IRS is giving you this form because they

VENDOR CONTACT INFORMATION

Vendor shall provide the requested Vendor Contact Information in the electronic proposal submission system including contract, purchase order, RFQ, and invoice contacts (or, if submitting a hard copy Proposal, timely request and complete the Vendor Contact Information form in accordance with the Instructions to Proposers).

FEDERAL AND STATE/PURCHASING COOPERATIVE EXPERIENCE

The Cooperative strives to provide Cooperative members with the best services and products at the best prices available from Vendors with the technical resources and ability to serve Cooperative members. Please respond to the following questions.

1. Provide the dollar value of sales to or through purchasing cooperatives at or based on an established catalog or market price during the previous 12-month period or the last fiscal year: $_____. (The period of the 12-month period is 01/2024 / 01/2025). In the event that a dollar value is not an appropriate measure of the sales, provide and describe your own measure of the sales of the item(s).
2. By submitting a proposal, you agree that, based on your written discounting policies, the discounts you offer the Cooperative are equal to or better than the best price you offer other purchasing cooperatives for the same items under equivalent circumstances.
3. Provide the information requested below for other purchasing cooperatives for which Proposer currently serves, or in the past has served, as an awarded vendor. Rows should be added to accommodate as many purchasing cooperatives as required.

PURCHASING GROUP	CURRENT VENDOR? (Y/N)	FORMER VENDOR (Y/N)? – IF YES, LIST YEARS AS VENDOR	AWARDED COMMODITY CATEGORY(IES)
1. Federal General Services Administration			
2. T-PASS (State of Texas)			
3. OMNIA Partners			
4. Sourcewell (NJPA)	Y		Construction Machinery
5. E&I Cooperative			
6. Houston-Galveston Area Council (HGAC)	Y		Construction Machinery
7. Choice Partners			
8. The Interlocal Purchasing System (TIPS)			
9. Other			

☐ **MY COMPANY DOES NOT CURRENTLY HAVE ANY OF THE ABOVE OR SIMILAR TYPE CONTRACTS.**

CURRENT BUYBOARD VENDORS

If you are a current BuyBoard vendor in the same contract category as proposed in this Proposal Invitation, indicate the discount for your current BuyBoard contract and the proposed discount in this Proposal. Explain any difference between your current and proposed discounts.

Current Discount (%): 10 **Proposed Discount (%):** 10

Explanation: _____

GOVERNMENTAL REFERENCES

For your Proposal to be considered, you must supply a minimum of five (5) individual governmental entity references. The Cooperative may contact any and all references provided as part of the Proposal evaluation. Provide the information requested below, including the existing pricing/discounts you offer each customer. The Cooperative may determine whether pricing/discounts are fair and reasonable by comparing pricing/discounts stated in your Proposal with the pricing/discounts you offer other governmental customers. Attach additional pages if necessary.

	Entity Name	Contact	Phone#	Email Address	Discount	Quantity/ Volume
1.	Matagorda County	Troy Shimek	361-972-2719	pct3@co.matagorda.tx.us	2/$226,000.00	
2.	Fort Bend County	Russell Hurta	832-473-7997	russell.hurta@fortbendcountytx.gov	2/$726,000.00	
3.	Brazoria County	Jason McCaffety	979-345-1130	jasonm@brazoria-county.com	1/$186,000.00	
4.	Cameron County	Carlos Sanchez	956-204-4656	carlos.sanchez@co.cameron.tx.us	3/$304,000.00	
5.	City of Austin	Tyler Steinbarger	512-974-8720	tyler.steinbarger@austintexas.gov	1/$601,000.00	

Do you ever modify your written policies or standard governmental sales practices as identified in the above chart to give better discounts (lower pricing) than indicated? **YES** ☐ **NO** ■ If YES, please explain:

_____

_____

_____

COMPANY PROFILE

Information on awarded Cooperative Contracts is available to Cooperative Members on the BuyBoard website. If your company is awarded a Contract under this Proposal Invitation, please provide a brief company description that you would like to have included with your company profile on the BuyBoard website. **Submit your company profile in a separate file, in Word format, with your Proposal**. (Note: Vendor is solely responsible for any content provided for inclusion on the BuyBoard website. The Cooperative reserves the right to exclude or remove any content in its sole discretion, with or without prior notice, including but not limited to any content deemed by the Cooperative to be inappropriate, irrelevant to the Contract, inaccurate, or misleading.)

Nueces Power Equipment is a family owned and operated business that has served South Texas for more than 30 years. NPE's roots are in the Case Agriculture equipment business, but transitioned to a focus on earthmoving equipment in the early 1990s.

Our broad footprint consisting of 7 locations spans from Houston to El Paso, and down to Texas' southern border, and also includes Southern New Mexico. We utilize our extensive coverage to service our customers, as they work throughout South Texas and New Mexico. We represent equipment from several well-respected manufacturers by providing Sales, Rentals, Parts and Service to our customers.

Our goal has always been to provide world-class customer service to our customers, enabling them to build Texas.

Nueces Power Equipment supplies customers with a wide range of new, used and rental equipment, in addition to parts and service from our Corpus Christi, Texas, location headquarters. In 1990 and 1991, Nueces Power Equipment added facilities in Victoria and Laredo, Texas. Then we added our San Benito location in 1997 for the Rio Grande Valley of Texas. In 2004, with the great demand in south Texas, Nueces Power Equipment expanded into west Texas and southern New Mexico, building a new facility in Vinton, Texas. Since then, Nueces Power Equipment has opened up facilities in the San Antonio and Houston areas. Our rich 30 year history of growth will be continuing into the future with plans for expansion on the horizon.

We provide a powerful combination of equipment solutions. The right choice for all of your requirements, Nueces Power Equipment offers:

- Professionals on staff.
- Seven locations throughout south, central and west Texas for all of your parts, service, sales and rental needs.
- Equipment from the world's most respected manufacturers.
- Nueces Power Equipment provides quality service at an affordable price. We represent many major manufacturers of construction equipment and specialize in customer satisfaction.

TEXAS REGIONAL SERVICE DESIGNATION

This form must be completed in the electronic proposal submission system (or, if submitting a hard copy Proposal, timely request and complete the form in accordance with the Instructions to Proposers).

The Cooperative (referred to as "Texas Cooperative" in this form and in the State Service Designation form) offers vendors the opportunity to service its members throughout the entire State of Texas. In the electronic proposal submission system, you must indicate if you will service Texas Cooperative members statewide or, if you do not plan to service all Texas Cooperative members statewide, you ***must*** indicate the specific regions you will service. If you propose to serve different regions for different products or services included in your Proposal, you must complete and submit a separate Texas Regional Service Designation form for each group of products and clearly indicate the products or services to which the designation applies. **(Additional forms can be obtained by contacting** bids@buyboard.com *at least five (5) business days prior to the Proposal Due Date*.) ***By designating a region or regions, you are certifying that you are authorized and willing to provide the proposed products and services in those regions. Designating regions in which you are either unable or unwilling to provide the specified products and services shall be grounds for either rejection of your Proposal or, if awarded, termination of your Contract.*** Additionally, if you do not plan to service Texas Cooperative members (i.e., if you will service only states other than Texas), *you must so indicate on the form in the electronic proposal submission system.*

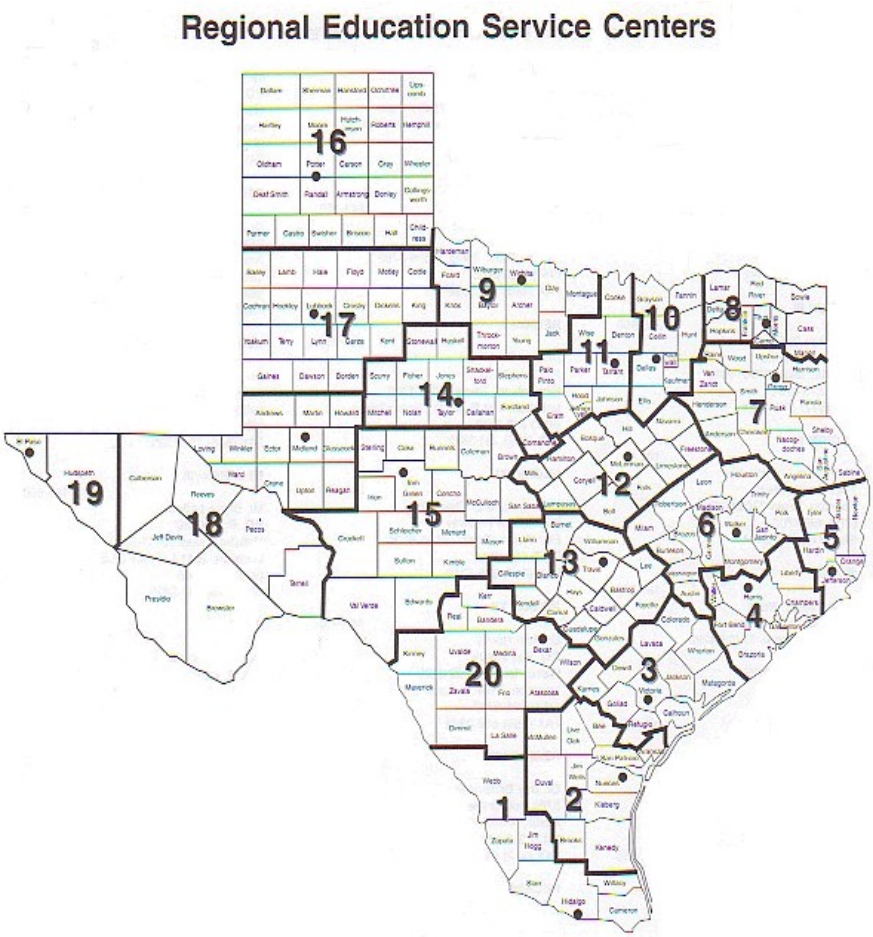

Region and Headquarters

1	Edinburg
2	Corpus Christi
3	Victoria
4	Houston
5	Beaumont
6	Huntsville
7	Kilgore
8	Mount Pleasant
9	Wichita Falls
10	Richardson
11	Fort Worth
12	Waco
13	Austin
14	Abilene
15	San Angelo
16	Amarillo
17	Lubbock
18	Midland
19	El Paso
20	San Antonio

STATE SERVICE DESIGNATION

This form must be completed in the electronic proposal submission system (or, if submitting a hard copy Proposal, timely request and complete the in accordance with the Instructions to Proposers).

As set forth in the Proposal Invitation, it is the Cooperative's intent that other governmental entities in the United States have the opportunity to purchase goods or services awarded under the Contract, subject to applicable state law, through a piggy-back award or similar agreement through the National Purchasing Cooperative BuyBoard. If you plan to service the entire United States or only specific states, *you must complete the State Service Designation information in the electronic proposal submission system. (Note: If you plan to service Texas Cooperative members, be sure that you complete the Texas Regional Service Designation form.)* ***In addition to this form, to be considered for a piggy-back award by the National Purchasing Cooperative, you must have an authorized representative sign the National Purchasing Cooperative Vendor Award Agreement that follows this page.***

If you serve different states for different products or services included in your Proposal, you must complete and submit a separate State Service Designation form for each group of products and clearly indicate the products or services to which the designation applies. **(Additional forms can be obtained by contacting bids@buyboard.com** ***at least five (5) business days prior to the Proposal Due Date.) By designating a state or states, you are certifying that you are authorized and willing to provide the proposed products and services in those states. Designating states in which you are either unable or unwilling to provide the specified products and services shall be grounds for either rejection of your Proposal or, if awarded, termination of your Contract.***

- I will service all states in the United States.
- I will not service all states in the United States.

Alabama
Alaska
Arizona
Arkansas
California (Public Contract Code 20118 & 20652)
Colorado
Connecticut
Delaware
District of Columbia
Florida
Georgia
Hawaii
Idaho
Illinois
Indiana
Iowa
Kansas
Kentucky
Louisiana
Maine
Maryland
Massachusetts
Michigan
Minnesota
Mississippi
Missouri
Montana
Nebraska
Nevada
New Hampshire
New Jersey
New Mexico
New York
North Carolina
North Dakota
Ohio
Oklahoma
Oregon
Pennsylvania
Rhode Island
South Carolina
South Dakota
Tennessee
Texas
Utah
Vermont
Virginia
Washington
West Virginia
Wisconsin
Wyoming

NATIONAL PURCHASING COOPERATIVE VENDOR AWARD AGREEMENT

In accordance with the Terms and Conditions associated with this Proposal Invitation, a contract awarded under this Proposal Invitation may be "piggy-backed" by another governmental entity. The National Purchasing Cooperative is an intergovernmental purchasing cooperative formed by certain school districts outside of Texas to serve its members throughout the United States. If you agree to be considered for a piggy-back award by the National Purchasing Cooperative, you agree to the following terms and agree to serve National Purchasing Cooperative members in the states you have indicated on the State Service Designation form, in your Proposal.

By signing this form, Proposer (referred to in this Agreement as "Vendor") agrees as follows:

1. Vendor acknowledges that if The Local Government Purchasing Cooperative ("Texas Cooperative") awards Vendor a contract under this Proposal Invitation ("Underlying Award"), the National Purchasing Cooperative ("National Cooperative") may - but is not required to - "piggy-back" on or re-award all or a portion of that Underlying Award ("Piggy-Back Award"). By signing this National Cooperative Vendor Award Agreement ("Agreement"), Vendor accepts and agrees to be bound by any such Piggy-Back Award as provided for herein.

2. In the event National Cooperative awards Vendor a Piggy-Back Award, the National Cooperative Administrator ("BuyBoard Administrator") will notify Vendor in writing of such Piggy-Back Award, which award shall commence on the effective date stated in the Notice and end on the expiration date of the Underlying Award, subject to annual renewals as authorized in writing by the BuyBoard Administrator. Vendor agrees that no further signature or other action is required of Vendor in order for the Piggy-Back Award and this Agreement to be binding upon Vendor. Vendor further agrees that no interlineations or changes to this Agreement by Vendor will be binding on National Cooperative, unless such changes are agreed to by its BuyBoard Administrator in writing.

3. Vendor agrees that it shall offer its goods and services to National Cooperative members at the same pricing and same general terms and conditions, subject to applicable state laws in the state of purchase, as required by the Underlying Award. However, nothing in this Agreement prevents Vendor from offering National Cooperative members better (i.e., lower) competitive pricing and more favorable terms and conditions than those in the Underlying Award.

4. Vendor hereby agrees and confirms that it will serve those states it has designated on the State Service Designation Form of this Proposal Invitation. Any changes to the states designated on the State Service Designation Form must be approved in writing by the BuyBoard Administrator.

5. Vendor agrees to pay National Cooperative the service fee provided for in the Underlying Award based on the amount of purchases generated from National Cooperative members through the Piggy-Back Award. Vendor shall remit payment to National Cooperative on such schedule as it specifies (which shall not be more often than monthly). Further, upon request, Vendor shall provide National Cooperative with copies of all purchase orders generated from National Cooperative members, vendor invoices, and/or such other documentation regarding those purchase orders as the Cooperative's administrators may require in their reasonable discretion for purposes of reviewing and verifying purchase activity. Vendor further agrees that National Cooperative shall have the right, upon reasonable written notice, to review Vendor's records pertaining to purchases made by National Cooperative members in order to verify the accuracy of service fees.

6. Vendor agrees that the Underlying Award, including its General Terms and Conditions, are adopted by reference to the fullest extent such provisions can reasonably apply to the post-proposal/contract award phase. The rights and responsibilities that would ordinarily inure to the Texas Cooperative pursuant to the Underlying Award shall inure to National Cooperative; and, conversely, the rights and responsibilities that would ordinarily inure to Vendor in the Underlying Award shall inure to Vendor in this Agreement. Vendor recognizes and agrees that Vendor and National Cooperative are the only parties to this Agreement, and that nothing in this Agreement has application to other third parties, including the Texas Cooperative. In the event of conflict between this Agreement and the terms of the Underlying Award, the terms of this Agreement shall control, and then only to the extent necessary to reconcile the conflict.

7. This Agreement shall be governed and construed in accordance with the laws of the State of Texas and venue for any dispute shall lie in the federal district court of Travis County, Texas.

8. Vendor acknowledges and agrees that the award of a Piggy-Back Award is within the sole discretion of National Cooperative, and that this Agreement does not take effect unless and until National Cooperative awards Vendor a Piggy-Back Award and the BuyBoard Administrator notifies Vendor in writing of such Piggy-Back Award as provided for herein.

WHEREFORE, by signing below Vendor agrees to the foregoing and warrants that it has the authority to enter into this Agreement.

Nueces Power Equipment	788-25
Name of Vendor	Proposal Invitation Number
Ben Hernandez	Ben Hernandez
Signature of Authorized Company Official	Printed Name of Authorized Company Official

07/07/2025
Date

LOCATION/AUTHORIZED SELLER LISTINGS

If you have more than one location/authorized seller that will service a Contract awarded under this Proposal Invitation, please list each location/authorized seller below. If additional sheets are required, please duplicate this form as necessary. NOTE: Awarded Vendors shall remain responsible for all aspects of the Contract, including processing of Purchase Orders, and shall be responsible for the performance of all locations and authorized sellers under and in accordance with the Contract. ***If you are a product manufacturer and wish to designate Designated Dealers as defined in the General Terms and Conditions to receive Cooperative member Purchase Orders on your behalf, you must complete the Manufacturer Designated Dealer form.***

Location/Authorized Seller Name	**Contact Person**	**Contact Information** (Mailing Address, Phone, Fax, Email)
Nueces Power Equipment	Ben Hernandez	7667 N. Sam Houston PKWY E Humble, TX 77396 713-247-0066 npesales@npetex.com
Nueces Power Equipment	Ben Hernandez	7510 IH-37 Access Rd Corpus Christi, TX 78409 361-289-0066 npesales@npetex.com
Nueces Power Equipment	Ben Hernandez	8241 S. Desert Blvd Vinton, TX 79821 915-541-0066 npesales@npetex.com
Nueces Power Equipment	Ben Hernandez	101 Oil Patch Rd Laredo, TX 78043 956-725-0066 npesales@npetex.com
Nueces Power Equipment	Ben Hernandez	4697 FM 1516 N Converse, TX 78109 210-310-0066 npesales@npetex.com
Nueces Power Equipment	Ben Hernandez	1 Industrial Way San Benito, TX 78586 956-361-0066 npesales@npetex.com
Nueces Power Equipment	Ben Hernandez	5201 Highway 59 N Victoria, TX 77901 361-576-0066 npesales@npetex.com
Nueces Power Equipment	Ben Hernandez	5909 TX-349 Midland, TX 79706 432-360-0066 npesales@npetex.com

P.O. Box 400, Austin, Texas 78767
800.695.2919 • bids@buyboard.com • buyboard.com

MANUFACTURER DEALER DESIGNATION

If Vendor is a manufacturer that sells products through a dealer network and wishes to designate a dealer or multiple dealers ("Designated Dealers") to receive Cooperative member Purchase Orders on Vendor's behalf, you must complete this form for each dealer you wish to designate.

Regardless of any Designated Dealers submitted by Vendor, Vendor specifically agrees and acknowledges that any such designations are for Vendor's convenience only and shall not, if Vendor is awarded a Contract, relieve Vendor of any obligations under the Contract, including payment of Cooperative service fees on all Purchase Orders submitted to Vendor or any Designated Dealer. In accordance with the General Terms and Conditions, an awarded Vendor shall remain responsible and liable for all of its obligations under the Contract and the performance of both Vendor and any of Vendor's Designated Dealers under and in accordance with the Contract and remain subject to all remedies for default thereunder, including, but not limited to suspension and termination of Vendor's Contract for nonpayment of service fees.

If awarded, Vendor authorizes the Cooperative, in its sole discretion, to list any Vendor Designated Dealers in the BuyBoard system and to receive Purchase Orders directly from Cooperative members on behalf of Vendor. To the extent a Vendor with Designated Dealers receives a Purchase Order directly, it shall be the responsibility of Vendor to appropriately process such Purchase Order in accordance with the Contract, including but not limited to timely forwarding such Purchase Order to a Designated Dealer for processing.

The Cooperative reserves the right, in its sole discretion, to refuse addition of, or request removal of, any Designated Dealer, and Vendor agrees to immediately require such Designated Dealer to cease accepting Purchase Orders or otherwise acting on Vendor's behalf under the Contract. Further, the Cooperative administrator shall be authorized to remove or suspend any or all Designated Dealers from the BuyBoard at any time in its sole discretion.

If you wish to designate a dealer to service a contract awarded under this Proposal Invitation, please list the Designated Dealer below. If you wish to designate multiple dealers, please duplicate this form as necessary.

Designated Dealer Name

Designated Dealer Contact Person

Designated Dealer Address

City

State

Zip Code

Phone Number

Fax Number

Email address

Designated Dealer Tax ID Number* **(*attach W-9)**

P.O. Box 400, Austin, Texas 78767
800.695.2919 • bids@buyboard.com • buyboard.com

PROPOSAL INVITATION QUESTIONNAIRE

The Cooperative will use your responses to the questions below in evaluating your Proposal and technical and financial resources to provide the goods and perform the services ("Work") under the BuyBoard contract contemplated by this Proposal Invitation ("Contract"). Proposers must fully answer each question, numbering your responses to correspond to the questions/numbers below. Proposers must complete below or attach your responses to this questionnaire and submit in one document with your Proposal. **You must submit the questionnaire and responses with your Proposal or the Proposal will not be considered.**

1. List the number of years Proposer has been in business and former business names (if applicable). Note whether your company is currently for sale or involved in any transaction that would significantly alter its business or result in acquisition by another entity.

Nueces Power Equipment has been in business since 1988, 37 years. The company is not currently for sale.

2. Describe the resources Proposer has to manage staff and successfully perform the Work contemplated under this Contract. State the number and summarize the experience of company personnel who may be utilized for the Work, including those who will be available to Cooperative members for assistance with project development, technical issues, and product selection for Work associated with this Contract.

Nueces Power Equipment employs nearly 200 employees. The majority of our workforce is technicians whose job it is to repair customer's equipment.

3. **Marketing Strategy:** For your Proposal to be considered, you must submit the Marketing Strategy you will use if the Cooperative accepts all or part of your Proposal. *(Example: Explain how your company will initially inform Cooperative members of your BuyBoard Contract, and how you will continue to support the BuyBoard for the duration of the Contract term.)* Attach additional pages if necessary.

The main source of our marketing efforts is our 18 sales representatives. their job is to go visit any and all governmental agencies. All of our reps are trained to suggest using Buyboard to transact equipment to these agencies.

4. Describe Proposer's financial capability to perform the Contract. State or describe the firm's financial strength and rating, bonding capacity, and insurance coverage limits. State whether the firm, or any of the firm's past or present owners, principal shareholders or stockholders, or officers, have been a debtor party to a bankruptcy, receivership, or insolvency proceeding in the last 7 years, and identify any such debtor party by name and relationship to or position with your firm.

Nueces Power Equipment has the financial measn necessary to provide for the service needs of our customers.

Our insurance coverage meets ad exceeds all requirements: E.G. $1Million in Worker's Compensation Limit

$1Million limit for Auto and General Liability, $5 Million in Umbrella Limits

5. Does your company have any outstanding financial judgments and/or is it currently in default on any loan or financing agreement? If so, provide detailed information on the nature of such items and prospects for resolution.

No

6. List all contracts, if any, in the last 10 years on which Proposer has defaulted, failed to complete or deliver the work, or that have been terminated for any reason. For each such contract, provide the project name, scope, value and date and the name of the procuring entity. Fully explain the circumstances of the default, failure to complete or deliver the work, or termination.

None

7. List all litigation or other legal proceedings (including arbitration proceedings), if any, in the last 10 years brought against your firm, or any of the firm's past or present owners, principal shareholders or stockholders, officers, agents or employees, that relate to or arise from a contract similar to this Contract or the Work contemplated under this Contract. Provide the style of the lawsuit or proceeding (name of parties and court or tribunal in which filed), nature of the claim, and resolution or current status.

None

Broce Broom

July 10, 2025

Ben Hernandez
Nueces Power & Equip

Dear Ben:

This letter will serve as authorization for Nueces Power & Equipment to sell "Pre-Owned/Reconditioned/Retired Rental" equipment as per Item 51 of BuyBoard Equipment Proposal Invitation No. 788-25 in the following Regions:

1, 2, 3, and 20

If you have any questions, please feel free to give me a call.

Sincerely,

Terry Wimer
Sr. VP Sales Operations
Broce Manufacturing Company, Inc.

Broce Broom

July 10, 2025

Ben Hernandez
Nueces Power & Equipment

Dear Ben:

I wanted to confirm that Nueces Power & Equipment is approved and authorized to sell, install, and service products sold to the TASB BuyBoard that are manufactured by Broce Manufacturing Company, Inc. This authorization applies to Contract number 788-25. This authorization is extended to the following TASB BuyBoard regions:

1, 2, 3, and 20

If you have any questions, please feel free to give me a call.

Sincerely,

Terry Wimer
Sr. VP Sales Operations
Broce Manufacturing Company, Inc.

April 11, 2025

BuyBoard
12007 Research Blvd.
PO Box 400
Austin, TX 78767-0400

RE: Case Construction Equipment Dealer for South Texas

MANUFACTURER'S AUTHORIZATION FORM

CNH Industrial America LLC ("CNH") is an established and reputable original equipment manufacturer of CASE branded construction equipment, and pursuant to a Case Construction Equipment Sales and Service Agreement has authorized Nueces Farm Center, Inc. ("Nueces Power Equipment") to sell, submit bids, and subsequently negotiate and sign contracts with you for new and used CASE branded construction equipment and parts manufactured by CNH for the following counties in south Texas:

Aransas	Goliad	Live Oak
Bee	Hidalgo	Nueces
Brewster	Hudspeth	Presidio
Brooks	Jackson	Refugio
Calhoun	Jeff Davis	San Patricio
Cameron	Jim Hogg	Star
Culberson	Jim Wells	Victoria
DeWitt	Kenedy	Webb
Duval	Kleberg	Willacy
El Paso	Lavaca	Zapata

CNH hereby extends its standard warranty and limitation of liability terms provided with all new CASE branded construction equipment and parts offered for supply by the above firm.

Signature: _____

[signature for and on behalf of Manufacturer]

CNH Industrial America LLC
621 State Street
Racine, WI 53402

HD HYUNDAI CONSTRUCTION EQUIPMENT NORTH AMERICA

6100 ATLANTIC BLVD. NORCROSS, GA. 30071
PHONE: (678) 823-7777
WWW.HCEAMERICAS.COM

July 14, 2025

Re: Dealer in Good Standing

To Whom This May Concern,

This letter is to confirm that **Nueces Power Equipment (NPE)** is a contracted dealer in good standing for **Sales (New and Used), Service, Parts, and Rental** for **HD Hyundai Construction Equipment North America (HCENA)**.

NPE's active trade area includes the following counties in the state of **Texas**:

Aransas	Atascosa	Bandera	Bee	Bexar	Blanco	Brewster
Brooks	Caldwell	Calhoun	Cameron	Comal	Crockett	Culberson
DeWitt	Dimmit	Duval	Edwards	El Paso	Frio	Gillespie
Goliad	Gonzales	Guadalupe	Hays	Hidalgo	Hudspeth	Jackson
Jeff Davis	Jim Hogg	Jim Wells	Karnes	Kendall	Kenedy	Kerr
Kimble	Kinney	Kleberg	La Salle	Lavaca	Live Oak	Llano
Mason	Maverick	McCulloch	McMullen	Medina	Menard	Nueces
Pecos	Presidio	Real	Reeves	Refugio	San Patricio	San Saba
Schleicher	Starr	Sutton	Terrell	Uvalde	Val Verde	Victoria
Webb	Willacy	Wilson	Zapata	Zavala		

Should you require an additional information or verification, please do not hesitate to reach out directly.

Best Regards,

Matt Gansser
Director of Distribution and Marketing
HD Hyundai Construction Equipment North America, Inc.
6100 Atlantic Blvd.
Norcross, Georgia 30071

Dale McLemore, Director of Sales

2004 Buck Lane

Lexington, KY 40511

July 11, 2025

The Local Government Purchasing
Cooperative 12007 Research Blvd.
Austin, Texas 78759

RE: Proposal #788-25

To Whom It May Concern,

We are pleased to confirm that Nueces Power Equipment with a HQ business address at 7510 I-37 Corpus Christi, TX 78409 is a non-exclusive distributor for LBX Co. LLC, authorized to sell Link-Belt Excavator products and provide service within the assigned territory of Texas.

Please contact the undersigned should you have any questions.

Regards,

Adam Craft

Adam Craft
Region Manager
South Central Region
LBX Co. LLC www.lbxco.com
Phone: 859-229-4741
Email: acraft@lbxco.com

Date: 7/17/2025

The Local Government Purchasing Cooperative.

Subject: Manufacturer Authorization Letter

We, **Skyjack, Inc.** located at **2525 Enterprise Circle West Chicago, IL 60185**, are the original manufacturer of Skyjack MEWP and Telehandlers.

This letter serves as official confirmation that we hereby authorize **Nueces Power Equipment and all branches** located at **7510 I-37, Corpus Christi**to act as our authorized distributor for the above-mentioned product(s) in the United States.

This authorization includes the rights to market, sell, and provide after-sales services for the products mentioned. We confirm that **Sunstate Equipment** is fully capable and equipped to provide the necessary support and service for our products. They are authorized to sell the full line of Skyjack products, including Vertical Mast, Scissor Lift, Boom Lift, and Telehandler. They are further authorized to sell and service across the state of Texas.

Should you require any further information or clarification, please do not hesitate to contact us.
Sincerely,

Matt Tavianini
V.P. Sales North America
Skyjack Inc.

_____
Signature

TAKEUCHI
From World First to World Leader

July, 10 2025

RE: Nueces Power Equipment, Inc.

The Local Government Purchasing Cooperative:

Nueces Power Equipment, Inc. is the assigned dealer for Takeuchi (U.S.), Ltd. For the location and surrounding areas listed, they are authorized to sell new and used Takeuchi machines, parts and provide warranty service. This is effective until further notice.

San Antonio, TX

For additional questions or needs, please feel free to contact me either by phone or email at Austin.Wells@takeuchi-us.com, 228-990-8098.

Thanks,

Austin Wells

Regional Business Manager

Takeuchi Mfg. (U.S.), Ltd.

July 11th, 2025

To the Local Government Purchasing Cooperative contract # 788-25

We hereby confirm that Nueces Farm Center, Inc. DBA Nueces Power Equipment located at 7510 I-37, Corpus Christi, TX 78409, is the authorized Wirtgen Group dealer for sales, service, and support for the following counties in the state of Texas:

Anderson, Angelina, Aransas, Atascosa, Austin, Bandera, Bastrop, Bee, Bell, Bexar, Blanco, Brazoria, Brazos, Brewster, Brooks, Burleson, Burnet, Caldwell, Calhoun, Cameron, Chambers, Cherokee, Colorado, Comal, Culberson, DeWitt, Dimmit, Duval, El Paso, Falls, Fayette, Fort Bend, Freestone, Frio, Galveston, Gillespie, Goliad, Gonzales, Grimes, Guadalupe, Hardin, Harris, Hays, Hidalgo, Houston, Hudspeth, Jackson, Jasper, Jeff Davis, Jefferson, Jim Hogg, Jim Wells, Karnes, Kendall, Kenedy, Kerr, Kinney, Kleberg, La Salle, Lavaca, Lee, Leon, Liberty, Limestone, Live Oak, Llano, Loving, Madison, Matagorda, Maverick, McMullen, Medina, Milam, Montgomery, Nacogdoches, Newton, Nueces, Orange, Pecos, Polk, Presidio, Real, Reeves, Refugio, Robertson, Sabine, San Augustine, San Jacinto, San Patricio, Starr, Travis, Trinity, Tyler, Uvalde, Victoria, Walker, Waller, Washington, Webb, Wharton, Willacy, Williamson, Wilson, Zapata, and Zavala.

Should you require further information, please do not hestitate to contact me at (615) 501- 0600, ext. -412 , or e-mail sandy.draper@wirtgen-group.com.

Best regards,

Sandy Draper
Director, Inside Sales Operations

WIRTGEN AMERICA
6030 Dana Way, Antioch, TN 37013
Phone: (615) 501-0600 | Fax: (615) 501-0691
www.wirtgen-group.com/america

PROPOSAL SPECIFICATION SUMMARY

The categories and items specified for this Proposal Invitation are summarized below. For full Proposal Specifications, you must review and complete the Proposal Specification information in the electronic proposal submission system in accordance with the Instructions to Proposers (or, if submitting a hard copy Proposal, timely request and complete the Proposal Specification Form in accordance with the Instructions to Proposers).

PROPOSAL NOTE 1: Vendors shall submit catalog(s)/price list(s) with their Proposal response or the Proposal will not be considered. Vendors shall submit catalog(s)/price list(s) with the Proposal in a readily available and readable electronic format, with Excel or searchable PDF preferred. ***No paper catalogs or manufacturer/vendor websites will be accepted.***

PROPOSAL NOTE 2: A Vendor proposing shall be approved and authorized by the manufacturer to sell, install, and service the brand(s) of product(s) proposed. Proposers responding to this Proposal Invitation shall submit an approval letter from each manufacturer for each product line proposed. The requirement to provide an approval letter from the manufacturer applies to both seller and installers. Manufacturers responding directly to this Proposal Invitation, in lieu of an authorization letter, shall submit a written explanation that the company is the manufacturer of the product line(s) proposed. Dealer authorization agreements will not be accepted as a substitute for the manufacturer authorization letter.

The manufacturer authorization letters must include the following:
1. Composed on manufacturer letterhead (an email message is not a substitute for the letter),
2. Addressed to "The Local Government Purchasing Cooperative",
3. Dated within the current calendar year,
4. List the regions in Texas and states that Vendor is authorized to sell, install, and service product(s) proposed, and
5. Name, Title, and Signature of Authorized Official from Manufacturer.

PROPOSAL NOTE 3: **"Pre-Owned/Reconditioned/Retired Rental"** shall be defined as equipment having been checked and inspected by a manufacturer-authorized dealer prior to sale and shall be no older than sixty (60) months as of the date of delivery. Proposers responding to this Proposal Invitation for **"Pre-Owned/Reconditioned/Retired Rental"** equipment must also be approved by the manufacturer to sell pre-owned/reconditioned/retired rental equipment for the brand submitted and must submit an approval letter from each manufacturer with the Proposal. Manufacturer authorization letters must include the regions in which equipment can be sold. Equipment listed as **"Pre-Owned/Reconditioned/Retired Rental"** shall be in good and working condition and shall include a minimum warranty of one-hundred eighty (180) days against any defect from workmanship and parts and shall cover equipment repairs and/or component replacement. Total equipment usage hours as displayed on the service meter will have a maximum of one thousand (1,000) hours per year of age and a minimum of seventy-five percent (75%) of wear remaining for tires, track, and/or ground engagement tools.

Section I: New Construction, Road, Bridge and Repair Equipment-PURCHASE ONLY
1. Discount (%) off catalog/pricelist for **Air Compressors (Truck or Trailer Mounted), Accessories and Attachments.**
2. Discount (%) off catalog/pricelist for **Articulated Trucks, Accessories and Attachments.**
3. Discount (%) off catalog/pricelist for **Asphalt Compactors, Accessories and Attachments.**
4. Discount (%) off catalog/pricelist for **Asphalt Cutters, Accessories and Attachments.**
5. Discount (%) off catalog/pricelist for **Asphalt Distributors, Accessories and Attachments.**
6. Discount (%) off catalog/pricelist for **Asphalt Emulsion Tanks, Accessories and Attachments.**
7. Discount (%) off catalog/pricelist for **Asphalt Pavers, Accessories and Attachments.**
8. Discount (%) off catalog/pricelist for **Backhoe/Loaders, Accessories and Attachments.**
9. Discount (%) off catalog/pricelist for **Chip Spreaders, Accessories and Attachments.**
10. Discount (%) off catalog/pricelist for **Cold Planers, Accessories and Attachments.**
11. Discount (%) off catalog/pricelist for **Conveyors, Accessories and Attachments.**
12. Discount (%) off catalog/pricelist for **Curb and Gutter Machines, Accessories and Attachments.**
13. Discount (%) off catalog/pricelist for **Forklifts, Accessories and Attachments.**

14. Discount (%) off catalog/pricelist for **Generator Equipment and Electrical Systems, Accessories and Attachments.**
15. Discount (%) off catalog/pricelist for **Hydraulic Hammers, Accessories and Attachments.**
16. Discount (%) off catalog/pricelist for **Integrated Tool Carriers, Accessories and Attachments.**
17. Discount (%) off catalog/pricelist for **Jack Hammers, Accessories and Attachments.**
18. Discount (%) off catalog/pricelist for **Knuckle Boom Loaders, Accessories and Attachments.**
19. Discount (%) off catalog/pricelist for **Material Handling Equipment, Accessories and Attachments.**
20. Discount (%) off catalog/pricelist for **Melter Crack Sealers** (Truck or Trailer Mounted)**, Accessories and Attachments.**
21. Discount (%) off catalog/pricelist for **Mini Excavators, Accessories and Attachments.**
22. Discount (%) off catalog/pricelist for **Motor Graders, Accessories and Attachments.**
23. Discount (%) off catalog/pricelist for **Multi Terrain Loaders, Accessories and Attachments.**
24. Discount (%) off catalog/pricelist for **Paving Breakers and Milling Machines, Accessories and Attachments.**
25. Discount (%) off catalog/pricelist for **Pipelaying Equipment, Accessories and Attachments.**
26. Discount (%) off catalog/pricelist for **Pneumatic Compactors and Rollers, Accessories and Attachments.**
27. Discount (%) off catalog/pricelist for **Pothole Patchers** (Trailer or Truck Mounted)**, Accessories and Attachments.**
28. Discount (%) off catalog/pricelist for **Road Broom Equipment, Accessories and Attachments.**
29. Discount (%) off catalog/pricelist for **Road Reclaiming Equipment, Accessories and Attachments.**
30. Discount (%) off catalog/pricelist for **Scrapers, Accessories and Attachments.**
31. Discount (%) off catalog/pricelist for **Skid Steer Loaders, Accessories and Attachments.**
32. Discount (%) off catalog/pricelist for **Soil Stabilizing Equipment, Accessories and Attachments.**
33. Discount (%) off catalog/pricelist for **Telescopic Handlers, Accessories and Attachments.**
34. Discount (%) off catalog/pricelist for **Track Loaders, Accessories and Attachments.**
35. Discount (%) off catalog/pricelist for **Track and Wheel Material Handlers, Accessories and Attachments.**
36. Discount (%) off catalog/pricelist for **Track-Type Tractors and Dozers, Accessories and Attachments.**
37. Discount (%) off catalog/pricelist for **Tracked Excavators, Accessories and Attachments.**
38. Discount (%) off catalog/pricelist for **Trommel Screen Equipment and Compost Turners, Accessories and Attachments.**
39. Discount (%) off catalog/pricelist for **Truck Mounted Excavators, Accessories and Attachments.**
40. Discount (%) off catalog/pricelist for **All Types of Truck Mounted Aerial Lifts, Accessories and Attachments** (telescopic, cable handler, digger/hydraulic derrick, and related aerial lifts).
41. Discount (%) off catalog/pricelist for **Utility Vehicles, Accessories and Attachments.**
42. Discount (%) off catalog/pricelist for **Vibratory Soil Compactors and Rollers, Accessories and Attachments.**
43. Discount (%) off catalog/pricelist for **Waste Handling Wheel Loaders and Landfill Compactors, Accessories and Attachments.**
44. Discount (%) off catalog/pricelist for **Wheel Dozers, Accessories and Attachments.**
45. Discount (%) off catalog/pricelist for **Wheel Excavators, Accessories and Attachments.**
46. Discount (%) off catalog/pricelist for **Wheel Loaders, Accessories and Attachments.**
47. Discount (%) off catalog/pricelist for **Heavy Duty Paint Striping Equipment, Accessories and Attachments.**
48. Discount (%) off catalog/pricelist for **All Other Construction, Road, Bridge, Other Equipment, Accessories and Attachments.**
49. Discount (%) off catalog/pricelist for **Repair Parts on All Types of Construction, Road, Bridge, and Other Equipment.**

Section II: Construction, Road, Bridge, and Repair Equipment-RENTAL ONLY (Rental Rate Sheet must be submitted with Proposal or Proposal will not be considered.)

50. Discount (%) off catalog/pricelist for **RENTAL of All Construction, Road, Bridge, Other Equipment, Accessories and Attachments.**

Section III: Construction, Road, Bridge, and Repair Equipment (Pre-Owned/Reconditioned/Retired Rental)**- PURCHASE ONLY**

51. Discount (%) off catalog/pricelist for **All Types of Pre-Owned/Reconditioned/Retired Rental Construction, Road, Bridge, Other Equipment, Accessories and Attachments.**

Section IV: Street Sweepers, Sand/Salt Spreading, Snowplows and Deicing Road and Bridge Equipment- PURCHASE ONLY

52. Discount (%) off catalog/pricelist for **Broom Street Sweepers, Accessories and Attachments.**
53. Discount (%) off catalog/pricelist for **Air Street Sweepers, Accessories and Attachments.**
54. Discount (%) off catalog/pricelist for **Regenerative Air Street Sweepers, Accessories and Attachments.**
55. Discount (%) off catalog/pricelist for **Waterless Street Sweepers, Accessories and Attachments.**
56. Discount (%) off catalog/pricelist for **Alternative Fuel Street Sweepers, Accessories and Attachments.**
57. Discount (%) off catalog/pricelist for **All Types of Mounted Sand and Salt Spreading Equipment, Accessories and Attachments** (Pick-Up, Utility, Heavy-Duty, or Tailgate).
58. Discount (%) off catalog/pricelist for **Pre-Wetting Equipment, Accessories and Attachments.**
59. Discount (%) off catalog/pricelist for **Snowplow Equipment, Accessories and Attachments.**
60. Discount (%) off catalog/pricelist for **Deicing Equipment, Accessories and Attachments.**
61. Discount (%) off catalog/pricelist for **All Other Types of Street Sweeper, Sand/Salt Spreading, Snowplows and Deicing Equipment, Accessories and Attachments.**
62. Discount (%) off catalog/pricelist for **Repair Parts on All Types of Street Sweepers, Sand/Salt Spreading, Snowplows, Deicing, and Other Related Equipment, Accessories and Attachments.**

Section V: Street Sweepers, Sand/Salt Spreading, Snowplows and Deicing Road and Bridge Equipment- RENTAL ONLY (Rental Rate Sheet must be submitted with Proposal or Proposal will not be considered.)

63. Discount (%) off catalog/pricelist for **RENTAL of All Street Sweepers, Sand/Salt Spreading, Snowplows and Deicing Road and Bridge Equipment, Accessories and Attachments.**

Section VI: Street Sweepers, Sand/Salt Spreading, Snowplows and Deicing Road and Bridge Equipment (Pre-Owned/Reconditioned/Retired Rental)**-PURCHASE ONLY**

64. Discount (%) off catalog/pricelist for **All Types of Pre-Owned/Reconditioned/Retired Rental Street Sweepers, Sand/Salt Spreading, Snowplows and Deicing Road and Bridge Equipment, Accessories and Attachments.**

Section VII: Soil and Road Chemical Polymers

65. Discount (%) off catalog/pricelist for **Chemical Base Polymers and Stabilizer for Soil and Road** (used for soil/road to provide a chemical bond joining particles into formation).

Section VIII: Installation and Repair Service

66. Discount (%) off catalog/pricelist for **Maintenance Services** (monthly, quarterly, and/or yearly) of **Construction, Road and Bridge, Street Sweepers, Sand/Salt Spreading, Snowplows, Deicing and Other Equipment.**
67. **Hourly Labor Rate for Installation/Repair Service on All Types of Construction, Road, Bridge and Other Equipment** - Not to Exceed hourly labor rate for Installation/Repair Service of Equipment and Products.
68. **Hourly Labor Rate for Installation/Repair Service on All Types of Street Sweepers, Sand/Salt Spreading, Snowplows, Deicing and Other Equipment** - Not to Exceed hourly labor rate for Installation/Repair Service of Equipment and Products.

REQUIRED FORMS CHECKLIST

(Please check (√) the following)

☒ Reviewed/Completed: **Proposer's Acceptance and Agreement**

PROPOSAL FORMS PART 1: COMPLIANCE FORMS

☒ Reviewed/Completed: **Proposal Acknowledgements**
☒ Reviewed/Completed: **Felony Conviction Disclosure**
☒ Reviewed/Completed: **Resident/Nonresident Certification**
☒ Reviewed/Completed: **Debarment Certification**
☒ Reviewed/Completed: **Vendor Employment Certification**
☒ Reviewed/Completed: **No Boycott Verification**
☒ Reviewed/Completed: **No Excluded Nation or Foreign Terrorist Organization Certification**
☒ Reviewed/Completed: **Historically Underutilized Business Certification**
☒ Reviewed/Completed: **Acknowledgement of BuyBoard Technical Requirements**
☒ Reviewed/Completed: **Construction-Related Goods and Services Affirmation**
☒ Reviewed/Completed: **Deviation and Compliance**
☒ Reviewed/Completed: **Vendor Consent for Name Brand Use**
☒ Reviewed/Completed: **Confidential/Proprietary Information**
☒ Reviewed/Completed: **EDGAR Vendor Certification**
☒ Reviewed/Completed: **Compliance Forms Signature Page**

PROPOSAL FORMS PART 2: VENDOR INFORMATION FORMS

☒ Reviewed/Completed: **Vendor Business Name**
☒ Reviewed/Completed: **Vendor Contact Information** (*complete in electronic proposal submission system)*
☒ Reviewed/Completed: **Federal and State/Purchasing Cooperative Experience**
☒ Reviewed/Completed: **Governmental References**
☒ Reviewed/Completed: **Company Profile**
☒ Reviewed/Completed: **Texas Regional Service Designation** (*complete in electronic proposal submission system)*
☒ Reviewed/Completed: **State Service Designation** (*complete in electronic proposal submission system)*
☒ Reviewed/Completed: **National Purchasing Cooperative Vendor Award Agreement** *(Vendors serving outside Texas only)*
☒ Reviewed/Completed: **Local/Authorized Seller Listings**
☒ Reviewed/Completed: **Manufacturer Dealer Designation**
☒ Reviewed/Completed: **Proposal Invitation Questionnaire**
☒ Reviewed/Completed: **Proposal Specifications** *with Discount (%) off Catalog/Pricelist and/or other required pricing information including Catalogs/Pricelists (or no bid response) and* ***Manufacturer Authorization Letters*** *shall be submitted with the Proposal or the Proposal will not be considered.*

NPE Information

Contact:	Carla Strasheim
Address:	P.O. Box 4789 Corpus Christi, TX 78469
Phone:	(361) 289-0066
Fax:	(361) 289-7424
Toll Free:	(361) 289-0066
Email:	carla@npetex.com
Web Address:	nuecespower.com

By submitting your response, you certify that you are authorized to represent and bind your company.

Ben Hernandez
Signature

ben@npetex.com
Email

Submitted at 7/17/2025 01:22:46 PM (CT)

Requested Attachments

Company Profile

Nueces Power Equipment Company Profile.docx

REQUIRED-Information on awarded Cooperative Contracts is available to Cooperative Members on the BuyBoard website. If your company is awarded a Contract under this Proposal Invitation, please provide a brief company description that you would like to have included with your company profile on the BuyBoard website. Submit your company profile in a separate file, in **Word format**, with your Proposal. *(Note: Vendor is solely responsible for any content provided for inclusion on the BuyBoard website. The Cooperative reserves the right to exclude or remove any content in its sole discretion, with or without prior notice, including but not limited to any content deemed by the Cooperative to be inappropriate, irrelevant to the Contract, inaccurate, or misleading.)* (**DO NOT** password protect uploaded files.)

Manufacturer Authorization Letter(s)

Nueces Buy Board Authorization - Case.pdf

A Vendor proposing shall be approved and authorized by the manufacturer to sell, install, and service the brand(s) of product(s) proposed. Proposers responding to this Proposal Invitation shall submit an approval letter from each manufacturer for each product line proposed. The requirement to provide an approval letter from the manufacturer applies to both seller and installers. Manufacturers responding directly to this Proposal Invitation, in lieu of an authorization letter, shall submit a written explanation that the company is the manufacturer of the product line(s) proposed. Dealer authorization agreements will not be accepted as a substitute for the manufacturer authorization letter.

The manufacturer authorization letters must include the following:
1. Composed on manufacturer letterhead (an email message is not a substitute for the letter),
2. Addressed to “The Local Government Purchasing Cooperative”,
3. Dated within the current calendar year,
4. List the regions in Texas and states that Vendor is authorized to sell, install, and service product(s) proposed, and
5. Name, Title, and Signature of Authorized Official from Manufacturer.

BuyBoard Proposal Invitation No. 788-25 - Construction, Road and Bridge, and Other Related Equipment

Proposal No. 788-25 (1)-2.pdf

REQUIRED-In PDF format, upload all COMPLETED and FILLED in proposal invitation documents available for download at www.buyboard.com.vendor including any additional pages, as necessary. NOTICE: DO NOT complete proposal forms in internet browser. No data will be stored. Download file to computer and complete proposal forms prior to submitting. (**DO NOT** password protect uploaded files.)

Exceptions and/or Detailed Information Related to Discount % and/or Hourly Labor Rate Proposed *No response*

In PDF format and if necessary, vendor shall attach detailed information regarding exceptions to pricing and/or discount percentage and define the services that are proposed to be provided. NOTE: IF DETAILED INFORMATION IS NOT SUBMITTED, PROPOSAL MAY NOT BE CONSIDERED. (**DO NOT** password protect uploaded files.)

Manufacturer Catalog(s) and/or Product Price list(s) Broce Price List.pdf

REQUIRED-In **PDF format ONLY,** upload manufacturer catalog(s) and/or product price list(s) in accordance with proposal invitation instructions. Vendors shall submit catalog(s)/price list(s) with their Proposal response or Proposal will not be considered. No paper catalogs or manufacturer/vendor websites will be accepted. File size must not exceed 250MB. (**DO NOT** password protect uploaded files.)

IRS Form W-9 Request for Taxpayer Identification Number and Certification 2025 W-9 NPE.pdf

REQUIRED-In PDF format, upload W-9 form. (**DO NOT** password protect uploaded files.)

Response Attachments

Linkbelt Price List.pdf

Linkbelt Price List

Takeuchi Price book.pdf

Takeuchi Price Book

Case Backhoe Price Book.pdf

Case Backhoe Price Book

Case Compact Wheel Loader Price Book.pdf

Case Compact Wheel Loader Price Book

Case Compaction Price Book.pdf

Case Compaction Price Book

Case CTL Price Book.pdf

Case CTL Price Book

Case Dozer Price Book.pdf

Case Dozer Price Book

Case Dozer UT Price Book.pdf

Case Dozer UT Price Book

Case Excavator Price Book.pdf

Case Excavator Price Book

Case Forklift Price Book.pdf

Case Forklift Price Book

Case Grader Price Book.pdf

Case Grader Price Book

Case Midi Excavator Price Book.pdf

Case Midi Excavator Price Book

Case Mini Excavator Price Book.pdf

Case Mini Excavator Price Book

Case MTL Price Book.pdf

Case MTL Price Book

Case SAL Price Book.pdf

Case SAL Price Book

Case SSL Price Book.pdf

Case SSL Price Book

Case Wheel Loader Price Book.pdf

Case Wheel Loader Price Book

Case Wheeled Excavator Price Book.pdf

Case Wheeled Excavator

NPE Texas Buy Board Approval letter LBX.pdf

NPE Texas Buy Board Approval Letter Linkbelt

Takeuchi - NPE- Buy Board Letter.pdf

Takeuchi Buyboard Approval letter

Nueces Power-TASBY Authorizations-7-10-25 Broce.pdf

Broce Buyboard Authorization letters

2025 NPE Rental Rate Sheet.xls

2025 NPE Rental Rate Sheet

Authorization Letter - Wirtgen.pdf

Authorization Letter - Wirtgen

HCENA Letter of Good Standing_NPE - Hyundai.pdf

Hyundai Authorization Letter

Hyundai Price List.pdf

Hyundai Price List

Used Price Evaluation - 2025 Buyboard.xlsx

Used Equipment Price List- Case, Liebherr, Hyundai, Wirtgen, Hamm, Takeuchi, Broce

Skyjack Price Book.pdf

Skyjack Price Book

NPE-Dealer Letter Skyjack.pdf

Skyjack Authorization Letter

Bid Attributes

1	**Name of Proposing Company (Legal Name)** By submitting a Proposal, Vendor is seeking to enter into a legal contract with the Cooperative. As such, Vendor must be an individual or legal business entity capable of entering into a binding contract. List the **LEGAL NAME** of the company seeking to contract with the Cooperative. Do **NOT** list an assumed name, dba, aka, etc. here. Such information may be provided below. Nueces Farm Center, Inc.

2	**Vendor Business Name** Name by which Vendor, if awarded, wishes to be identified on the BuyBoard. If different than the Name of Proposing Company listed above, only valid trade names (dba, aka, etc.) of the Proposing Company may be used. Nueces Power Equipment

3	**Vendor Mailing/Street Address** Vendor Mailing/Street Address 7510 IH 37 Access Road
4	**Vendor Mailing/Street Address - City** Vendor Mailing/Street Address - City Corpus Christi
5	**Vendor Mailing/Street Address - State** Vendor Mailing/Street Address - State (Abbreviate State Name) TX
6	**Vendor Mailing/Street Address - Zip Code** Vendor Mailing/Street Address - Zip Code 78409
7	**Federal Identification Number** Federal Identification Number 74-1649707
8	**No Boycott Verification/No Excluded Nation or Foreign Terrorist Organization Certification/Historically Underutilized Business Certification** No Boycott Verification/No Excluded Nation or Foreign Terrorist Organization Certification/Historically Underutilized Business Certification

9 **No Boycott Certification**

A Texas governmental entity may not enter into a contract with a value of $100,000 or more that is to be paid wholly or partly from public funds with a company (excluding a sole proprietorship) that has 10 or more full-time employees for goods or services unless the contract contains a written verification from the company that it: (1) does not boycott Israel and will not boycott Israel during the term of the contract (TEX. GOV'T CODE Ch. 2271), (2) does not boycott energy companies and will not boycott energy companies during the term of the contract (TEX. GOV'T CODE Ch. 2276), and (3) does not have a practice, policy, guidance, or directive that discriminates against a firearm entity or firearm trade association and will not discriminate during the term of the contract against a firearm entity or firearm trade association (TEX. GOV'T CODE Ch. 2274). Accordingly, this certification form is included to the extent required by law.
"Boycott Israel" means refusing to deal with, terminating business activities with, or otherwise taking any action that is intended to penalize, inflict economic harm on, or limit commercial relations specifically with Israel, or with a person or entity doing business in Israel or in an Israeli-controlled territory, but does not include an action made for ordinary business purposes. TEX. GOV'T CODE §808.001(1).

"Boycott energy company" means, without an ordinary business purpose, refusing to deal with, terminating business activities with, or otherwise taking any action that is intended to penalize, inflict economic harm on, or limit commercial relations with a company because the company: (A) engages in the exploration, production, utilization, transportation, sale, or manufacturing of fossil fuel-based energy and does not commit or pledge to meet environmental standards beyond applicable federal and state law; or (B) does business with a company described by Paragraph (A). TEX. GOV'T CODE §809.001(1).

"Discriminate against a firearm entity or firearm trade association" means, (A) with respect to the entity or association, to: (i) refuse to engage in the trade of any goods or services with the entity or association based solely on its status as a firearm entity or firearm trade association; (ii) refrain from continuing an existing business relationship with the entity or association based solely on its status as a firearm entity or firearm trade association; or (iii) terminate an existing business relationship with the entity or association based solely on its status as a firearm entity or firearm trade association; and (B) does not include: (i) the established policies of a merchant, retail seller, or platform that restrict or prohibit the listing or selling of ammunition, firearms, or firearm accessories; and (ii) a company's refusal to engage in the trade of any goods or services, decision to refrain from continuing an existing business relationship, or decision to terminate an existing business relationship: (aa) to comply with federal, state, or local law, policy, or regulations or a directive by a regulatory agency; or (bb) for any traditional business reason that is specific to the customer or potential customer and not based solely on an entity's or association's status as a firearm entity or firearm trade association. TEX. GOV'T CODE §2274.001(3).

By signature on the Compliance Forms Signature Page, to the extent applicable, I certify and verify that Vendor does not boycott Israel, boycott energy companies, or discriminate against a firearm entity or firearm trade association and will not do so during the term of any contract awarded under this Proposal Invitation, that this certification is true, complete and accurate, and that I am authorized by my company to make this certification.

Yes

10 **No Excluded Nation or Foreign Terrorist Organization Certification**

Chapter 2252 of the Texas Government Code provides that a Texas governmental entity may not enter into a contract with a company engaged in active business operations with Sudan, Iran, or a foreign terrorist organization – specifically, any company identified on a list prepared and maintained by the Texas Comptroller under Texas Government Code §§806.051, 807.051, or 2252.153. (A company that the U.S. Government affirmatively declares to be excluded from its federal sanctions regime relating to Sudan, Iran, or any federal sanctions regime relating to a foreign terrorist organization is not subject to the contract prohibition.)

By signature on the Compliance Forms Signature Page, I certify and verify that Vendor is not on the Texas Comptroller's list identified above; that this certification is true, complete and accurate; and that I am authorized by my company to make this certification.

Yes

11 **Historically Underutilized Business Certification**

A Proposer that has been certified as a Historically Underutilized Business (also known as a Minority/Women Business Enterprise or “MWBE” and all referred to in this form as a “HUB”) is encouraged to indicate its HUB certification status when responding to this Proposal Invitation. The BuyBoard website will indicate HUB certifications for awarded Vendors that properly indicate and document their HUB certification on this form.

I certify that my company has been certified as a MWBE/HUB in the following categories: *(Please check all that apply)*

12 **Minority Owned Business**

Minority Owned Business

☐ *Minority Owned Business*

13 **Women Owned Business**

Women Owned Business

☐ *Women Owned Business*

14 **Service-Disabled Veteran Owned Business**

Service-Disabled Veteran Owned Business (veteran defined by 38 U.S.C. §101(2), who has a service-connected disability as defined by 38 U.S.C. § 101(16), and who has a disability rating of 20% or more as determined by the U. S. Department of Veterans Affairs or Department of Defense)

☐ *Service-Disabled Veteran Owned Business*

15 **Certification Number**

Certification Number

No response

16 **Name of Certifying Agency**

Certifying Agency

No response

17 **Non-MWBE/HUB**

My company has NOT been certified as a MWBE/HUB

☑ Non-HUB

18 **Vendor General Contact Information**

Proposal/Contract General Contact Information

19 **Vendor Proposal/Contract Contact - First Name**

Vendor Proposal/Contract Contact - First Name

Ben

20 **Vendor Proposal/Contract Contact - Last Name**

Vendor Proposal/Contract Contact - Last Name

Hernandez

21 **Vendor Proposal/Contract Contact E-mail Address**

Vendor Proposal/Contract Contact E-mail Address

ben@npetex.com

22 **Vendor Proposal/Contract Mailing Address**

Vendor Proposal/Contract Mailing Address

5201 US Hwy 59 N

23 **Vendor Proposal/Contact Mailing Address - City**

Vendor Proposal/Contact Mailing Address - City

Victoria

24 **Vendor Proposal/Contact Mailing Address - State**

Vendor Proposal/Contact Mailing Address - State (Abbreviate State Name)

TX

25 **Vendor Proposal/Contact Mailing Address - Zip Code**

Vendor Proposal/Contact Mailing Address - Zip Code

77905

26 **Vendor Proposal/Contact Phone Number**

Vendor Proposal/Contact Phone Number (xxx-xxx-xxxx)

361-576-0066

27 **Vendor Proposal/Contact Extension Number**

Vendor Proposal/Contact Extension Number

No response

28 **Company Website**

Company Website (www.XXXXX.com)

www.nuecespower.com

29 **Purchase Orders Contact Information**

All Purchase Orders from Cooperative members will be available through the Internet. Vendors need Internet access and at least one e-mail address so that notification of new orders can be sent to the Internet contact when a new purchase order arrives. An information guide will be provided to Vendors to assist them with retrieving their orders.

Please select options below for receipt of Purchase Orders and provide the requested information:

- I will use the internet to receive Purchase Orders at the following address

Yes

30 **Purchase Order E-mail Address**

Purchase Order E-mail Address

stacy@npetex.com

31 **Purchase Order Contact - First Name**

Purchase Order Contact - First Name

Stacy

32 **Purchase Order Contact - Last Name**

Purchase Order Contact - Last Name

Terrell

33 **Purchase Order Contact Phone Number**

Purchase Order Contact Phone Number (xxx-xxx-xxxx)

361-289-0099

34 **Purchase Order Contact Extension Number**

Purchase Order Contact Extension Number

No response

35 **Alternate Purchase Order E-mail Address**

Alternate Purchase Order E-mail Address

carla@npetex.com

36 **Alternate Purchase Order Contact - First Name**

Alternate Purchase Order Contact - First Name

Carla

37 **Alternate Purchase Order Contact - Last Name**

Alternate Purchase Order Contact - Last Name

Strasheim

38 **Alternate Purchase Order Contact Phone Number**

Alternate Purchase Order Contact Phone Number (xxx-xxx-xxxx)

361-289-0066

39 **Alternate Purchase Order Contact Extension Number**

Alternate Purchase Order Contact Extension Number

No response

40 **Purchase Orders Contact Information**

All Purchase Orders from Cooperative members will be available through the Internet. Vendors need Internet access and at least one e-mail address so that notification of new orders can be sent to the Internet contact when a new purchase order arrives. An information guide will be provided to Vendors to assist them with retrieving their orders.

Please select options below for receipt of Purchase Orders and provide the requested information:

- Purchase Orders may be received by the Designated Dealer(s) identified on my company's Dealer Designation form as provided to the Cooperative administrator. I understand that my company shall remain responsible for the Contract and the performance of all Designated Dealers under and in accordance with the Contract.

Yes

41 **Request for Quotes (RFQ)**

Cooperative members will send RFQs to you by e-mail. Please provide e-mail addresses for the receipt of RFQs:

42 **Request for Quote (RFQ) E-mail Address**

Request for Quote (RFQ) E-mail Address

stacy@npetex.com

43 **Request for Quote (RFQ) Contact - First Name**

Request for Quote (RFQ) Contact - First Name

Stacy

44 **Request for Quote (RFQ) Contact - Last Name**

Request for Quote (RFQ) Contact - Last Name

Terrell

45 **Request for Quote (RFQ) Contact Phone Number**

Request for Quote (RFQ) Contact Phone Number (xxx-xxx-xxxx)

361-289-0066

46 **Request for Quote (RFQ) Contact Extension Number**

Request for Quote (RFQ) Contact Extension Number

No response

47 **Alternate Request for Quote (RFQ) E-mail Address**

Alternate Request for Quote (RFQ) E-mail Address

carla@npetex.com

48 **Alternate Request for Quote (RFQ) Contact - First Name**

Alternate Request for Quote (RFQ) Contact - First Name

Carla

49 **Alternate Request for Quote (RFQ) Contact - Last Name**

Alternate Request for Quote (RFQ) Contact - Last Name

Strasheim

50 **Alternate Request for Quote (RFQ) Contact Phone Number**

Alternate Request for Quote (RFQ) Contact Phone Number (xxx-xxx-xxxx)

361-289-0066

51 **Alternate Request for Quote (RFQ) Contact Extension Number**

Alternate Request for Quote (RFQ) Contact Extension Number

No response

52 **Invoices**

Your company will be billed monthly for the service fee due under a Contract awarded under this Proposal Invitation. **All invoices are available on the BuyBoard website and e-mail notifications will be sent when they are ready to be retrieved**.

53 **Invoices**

Please choose only one (1) of the following options for receipt of invoices and provide the requested information:

(a) Service fee invoices and related communications should be provided directly to my company at:

or

(b) In lieu of my company, I request and authorize all service fee invoices to be provided directly to the following billing agent:

If Vendor authorizes a billing agent to receive and process service fee invoices, in accordance with the General Terms and Conditions of the Contract, Vendor specifically acknowledges and agrees that nothing in that designation shall relieve Vendor of its responsibilities and obligations under the Contract including, but not limited to, payment of all service fees under any Contract awarded Vendor.

Service fee invoices and notices direct to company

54 **Invoice Company Name**

Invoice Company Name

Nueces Power Equipment

55 **Invoice Company Department Name**

Invoice Company Department Name

Accounting

56 **Invoice Contact - First Name**

Invoice Contact - First Name

Carla

57 **Invoice Contact - Last Name**

Invoice Contact - Last Name

Strasheim

58 **Invoice Mailing Address**

Invoice Mailing Address (P.O. Box or Street Address)

P.O. Box 4789

59 **Invoice Mailing Address - City**

Invoice Mailing Address - City

Corpus Christi

60 **Invoice Mailing Address - State**

Invoice Mailing Address - State (Abbreviate State Name)

TX

61 **Invoice Mailing Address - Zip Code**

Invoice Mailing Address (Zip Code)

78469

62 **Invoice Contact Phone Number**

Invoice Contact Phone Number (xxx-xxx-xxxx)

361-289-0066

63 **Invoice Contact Extension Number**

Invoice Contact Extension Number

No response

64 **Invoice Contact Fax Number**

Invoice Contact Fax Number (xxx-xxx-xxxx)

No response

65 **Invoice Contact E-mail Address**

Invoice Contact E-mail

carla@npetex.com

66 **Invoice Contact Alternate E-mail Address**

Invoice Contact Alternate E-mail Address

No response

67 **Billing Agent Company Name**

Billing Agent Company Name

No response

68 **Billing Agent Department Name**

Billing Agent Department Name

No response

69 **Billing Agent Contact - First Name**

Billing Agent Contact - First Name

No response

70 **Billing Agent Contact - Last Name**

Billing Agent Contact - Last Name

No response

71 **Billing Agent Mailing Address**

Billing Agent Mailing Address (P.O. Box or Street Address)

No response

72 **Billing Agent Mailing Address - City**

Billing Agent Mailing Address - City

No response

73 **Billing Agent Mailing Address - State**

Billing Agent Mailing Address - State (Abbreviate State Name)

No response

74 **Billing Agent Mailing Address - Zip Code**

Billing Agent Mailing Address - Zip Code

No response

75 **Billing Agent Contact Phone Number**

Billing Agent Contact Phone Number (xxx-xxx-xxxx)

No response

76 **Billing Agent Contact Extension Number**

Billing Agent Contact Extension Number

No response

77 **Billing Agent Fax Number**

Billing Agent Fax Number

No response

78 **Billing Agent Contact E-mail Address**

Billing Agent Contact E-mail Address

No response

79 **Billing Agent Alternative E-mail Address**

Billing Agent Alternative E-mail Address

No response

80 **Shipping Via**

Common Carrier, Company Truck, Prepaid and Add to Invoice, or Other

Company Truck

81 **Payment Terms**

Note: Vendor payment terms must comply with the BuyBoard General Terms and Conditions and the Texas Prompt Payment Act (Texas Government Code Ch. 2251).

Net 30 Days

82 **Vendor's Internal/Assigned Reference/Quote Number**

Vendor's Internal/Assigned Reference/Quote Number

No response

83 **State or Attach Return Policy**

Note: Only return requirements and processes will be deemed part of Vendor's return policy. Any unrelated contract terms, terms of sale, or other information not specifically related to return requirements and processes included in Vendor's return policy shall not apply to any awarded Contract unless specifically included as a deviation in the Deviation and Compliance Form and accepted by the Cooperative.

Must off rent via email to Stacy Terrell at stacy@npetex.com

84 **Electronic Payments**

Are electronic payments acceptable to your company?

Yes

85 **Credit Card Payments**

Are credit card payments acceptable to your company?

Yes

86 **Texas Regional Service Designation**

Texas Regional Service Designation - Refer to Form in Proposal Invitation

The Cooperative (referred to as “Texas Cooperative” in this form and in the State Service Designation form) offers vendors the opportunity to service its members throughout the entire State of Texas. If you do not plan to service all Texas Cooperative members statewide, you **must** indicate the specific regions you will service on this form. If you propose to serve different regions for different products or services included in your Proposal, you must complete and submit a separate Texas Regional Service Designation form for each group of products and clearly indicate the products or services to which the designation applies. ***By designating a region or regions, you are certifying that you are authorized and willing to provide the proposed products and services in those regions. Designating regions in which you are either unable or unwilling to provide the specified products and services shall be grounds for either rejection of your Proposal or, if awarded, termination of your Contract.*** Additionally, if you do not plan to service Texas Cooperative members (i.e., if you will service only states other than Texas), you must so indicate on this form.

87 **Company Name**

Company Name

Nueces Power Equipment

88 **Texas Regional Service Designation**

Select only one of the following options**.** If you select **"I will NOT serve all Regions of Texas",** you must then check the individual Regions you wish to serve.

I will not serve all Regions of Texas

89 **Region 1**

Region 1 - Edinburg

☑ Region 1

90 **Region 2**

Region 2 - Corpus Christi

☑ Region 2

91 **Region 3**

Region 3 - Victoria

☑ Region 3

92 **Region 4**

Region 4 - Houston

☑ Region 4

93 **Region 5**

Region 5 - Beaumont

☑ Region 5

94 **Region 6**

Region 6 - Huntsville

☑ Region 6

95	**Region 7** Region 7 - Kilgore ☐ *Region 7*
96	**Region 8** Region 8 - Mount Pleasant ☐ *Region 8*
97	**Region 9** Region 9 - Wichita Falls ☐ *Region 9*
98	**Region 10** Region 10 - Richardson ☐ *Region 10*
99	**Region 11** Region 11 - Fort Worth ☐ *Region 11*
100	**Region 12** Region 12 - Waco ☑ Region 12
101	**Region 13** Region 13 - Austin ☑ Region 13
102	**Region 14** Region 14 - Abilene ☑ Region 14
103	**Region 15** Region 15 - San Angelo ☑ Region 15
104	**Region 16** Region 16 - Amarillo ☐ *Region 16*
105	**Region 17** Region 17 - Lubbock ☑ Region 17
106	**Region 18** Region 18 - Midland ☑ Region 18

107

Region 19

Region 19 - El Paso

☑ Region 19

108

Region 20

Region 20 - San Antonio

☑ Region 20

109

State Service Designation

State Service Designation - Refer to Form in Proposal Invitation.

As set forth in the Proposal Invitation, it is the Cooperative's intent that other governmental entities in the United States have the opportunity to purchase goods or services awarded under the Contract, subject to applicable state law, through a piggy-back award or similar agreement through the National Purchasing Cooperative BuyBoard. If you plan to service the entire United States or only specific states, you must complete this form accordingly. *(Note: If you plan to service Texas Cooperative members, be sure that you complete the Texas Regional Service Designation form.)* ***In addition to this form, to be considered for a piggy-back award by the National Purchasing Cooperative, you must have an authorized representative sign the National Purchasing Cooperative Vendor Award Agreement that follows this form.***

If you serve different states for different products or services included in your Proposal, you must complete and submit a separate State Service Designation form for each group of products and clearly indicate the products or services to which the designation applies. *By designating a state or states, you are certifying that you are authorized and willing to provide the proposed products and services in those states. Designating states in which you are either unable or unwilling to provide the specified products and services shall be grounds for either rejection of your Proposal or, if awarded, termination of your Contract.*

110

Company Name

Company Name

Nueces Power Equipment

111

State Service Designation

Select only one of the following options. If you select "I will NOT serve all States", you must then check the individual States you wish to serve.

I will not serve all states in the United States

112

Alabama

Alabama

☐ *Alabama*

113

Alaska

Alaska

☐ *Alaska*

114

Arizona

Arizona

☐ *Arizona*

115

Arkansas

Arkansas

☐ *Arkansas*

116	**California** California (Public Contract Code 20118 & 20652) ☐ *California*
117	**Colorado** Colorado ☐ *Colorado*
118	**Connecticut** Connecticut ☐ *Connecticut*
119	**Delaware** Delaware ☐ *Delaware*
120	**District of Columbia** District of Columbia ☐ *District of Columbia*
121	**Florida** Florida ☐ *Florida*
122	**Georgia** Georgia ☐ *Georgia*
123	**Hawaii** Hawaii ☐ *Hawaii*
124	**Idaho** Idaho ☐ *Idaho*
125	**Illinois** Illinois ☐ *Illinois*
126	**Indiana** Indiana ☐ *Indiana*
127	**Iowa** Iowa ☐ *Iowa*

128	**Kansas** Kansas ☐ *Kansas*
129	**Kentucky** Kentucky ☐ *Kentucky*
130	**Louisiana** Louisiana ☐ *Louisiana*
131	**Maine** Maine ☐ *Maine*
132	**Maryland** Maryland ☐ *Maryland*
133	**Massachusetts** Massachusetts ☐ *Massachusetts*
134	**Michigan** Michigan ☐ *Michigan*
135	**Minnesota** Minnesota ☐ *Minnesota*
136	**Mississippi** Mississippi ☐ *Mississippi*
137	**Missouri** Missouri ☐ *Missouri*
138	**Montana** Montana ☐ *Montana*
139	**Nebraska** Nebraska ☐ *Nebraska*

140	**Nevada** Nevada ☐ *Nevada*
141	**New Hampshire** New Hampshire ☐ *New Hampshire*
142	**New Jersey** New Jersey ☐ *New Jersey*
143	**New Mexico** New Mexico ☑ New Mexico
144	**New York** New York ☐ *New York*
145	**North Carolina** North Carolina ☐ *North Carolina*
146	**North Dakota** North Dakota ☐ *North Dakota*
147	**Ohio** Ohio ☐ *Ohio*
148	**Oklahoma** Oklahoma ☐ *Oklahoma*
149	**Oregon** Oregon ☐ *Oregon*
150	**Pennsylvania** Pennsylvania ☐ *Pennsylvania*
151	**Rhode Island** Rhode Island ☐ *Rhode Island*

152	**South Carolina** South Carolina ☐ *South Carolina*
153	**South Dakota** South Dakota ☐ *South Dakota*
154	**Tennessee** Tennessee ☐ *Tennessee*
155	**Texas** Texas ☑ Texas
156	**Utah** Utah ☐ *Utah*
157	**Vermont** Vermont ☐ *Vermont*
158	**Virginia** Virginia ☐ *Virginia*
159	**Washington** Washington ☐ *Washington*
160	**West Virginia** West Virginia ☐ *West Virginia*
161	**Wisconsin** Wisconsin ☐ *Wisconsin*
162	**Wyoming** Wyoming ☐ *Wyoming*

Bid Lines

1 **Section I: New Construction, Road, Bridge and Repair Equipment-PURCHASE ONLY**

Discount (%) off catalog/price list for **Air Compressors (Truck or Trailer Mounted), Accessories and Attachments.** Catalog/Price list MUST be included or proposal will not be considered.

No Bid

Item Notes: **PROPOSAL NOTE 1:** Vendors shall submit catalog(s)/price list(s) with their Proposal response or the Proposal will not be considered. Vendors shall submit catalog(s)/price list(s) with the Proposal in a readily available and readable electronic format, with Excel or searchable PDF preferred. **No paper catalogs or manufacturer/vendor websites will be accepted.**

PROPOSAL NOTE 2: A Vendor proposing shall be approved and authorized by the manufacturer to sell, install, and service the brand(s) of product(s) proposed. Proposers responding to this Proposal Invitation shall submit an approval letter from each manufacturer for each product line proposed. The requirement to provide an approval letter from the manufacturer applies to both seller and installers. Manufacturers responding directly to this Proposal Invitation, in lieu of an authorization letter, shall submit a written explanation that the company is the manufacturer of the product line(s) proposed. Dealer authorization agreements will not be accepted as a substitute for the manufacturer authorization letter.

The manufacturer authorization letters must include the following:
1. Composed on manufacturer letterhead (an email message is not a substitute for the letter),
2. Addressed to “The Local Government Purchasing Cooperative”,
3. Dated within the current calendar year,
4. List the regions in Texas and states that Vendor is authorized to sell, install, and service product(s) proposed, and
5. Name, Title, and Signature of Authorized Official from Manufacturer.

PROPOSAL NOTE 3: **"Pre-Owned/Reconditioned/Retired Rental"** shall be defined as equipment having been checked and inspected by a manufacturer-authorized dealer prior to sale and shall be no older than sixty (60) months as of the date of delivery. Proposers responding to this Proposal Invitation for **"Pre-Owned/Reconditioned/Retired Rental"** equipment must also be approved by the manufacturer to sell pre-owned/reconditioned/retired rental equipment for the brand submitted and must submit an approval letter from each manufacturer with the Proposal. Manufacturer authorization letters must include the regions in which equipment can be sold. Equipment listed as **"Pre-Owned/Reconditioned/Retired Rental"** shall be in good and working condition and shall include a minimum warranty of one-hundred eighty (180) days against any defect from workmanship and parts and shall cover equipment repairs and/or component replacement. Total equipment usage hours as displayed on the service meter will have a maximum of one thousand (1,000) hours per year of age and a minimum of seventy-five percent (75%) of wear remaining for tires, track, and/or ground engagement tools.

Vendors proposing multiple manufacturer product lines and/or catalog/price list per line item must submit the information as follows or proposal may not be considered:

- Select **"Add Alternate"** for each additional manufacturer product line and/or catalog/price list proposed
- Vendor’s must list one specific percentage discount for each manufacturer and/or catalog/price list listed

Item Attributes

1. State Name of Manufacturer Catalog or Product Price list Proposed with Discount Percentage

NOTE: Do not reference SKU, Reference Numbers, Websites, and/or "See Attached/Enclosed".

No response

2 **Section I: New Construction, Road, Bridge and Repair Equipment-PURCHASE ONLY**

Discount (%) off catalog/price list for **Articulated Trucks, Accessories and Attachments.** Catalog/Price list MUST be included or proposal will not be considered.

Total: 35%

Item Notes: **PROPOSAL NOTE 1:** Vendors shall submit catalog(s)/price list(s) with their Proposal response or the Proposal will not be considered. Vendors shall submit catalog(s)/price list(s) with the Proposal in a readily available and readable electronic format, with Excel or searchable PDF preferred. **No paper catalogs or manufacturer/vendor websites will be accepted.**

PROPOSAL NOTE 2: A Vendor proposing shall be approved and authorized by the manufacturer to sell, install, and service the brand(s) of product(s) proposed. Proposers responding to this Proposal Invitation shall submit an approval letter from each manufacturer for each product line proposed. The requirement to provide an approval letter from the manufacturer applies to both seller and installers. Manufacturers responding directly to this Proposal Invitation, in lieu of an authorization letter, shall submit a written explanation that the company is the manufacturer of the product line(s) proposed. Dealer authorization agreements will not be accepted as a substitute for the manufacturer authorization letter.

The manufacturer authorization letters must include the following:
1. Composed on manufacturer letterhead (an email message is not a substitute for the letter),
2. Addressed to “The Local Government Purchasing Cooperative”,
3. Dated within the current calendar year,
4. List the regions in Texas and states that Vendor is authorized to sell, install, and service product(s) proposed, and
5. Name, Title, and Signature of Authorized Official from Manufacturer.

PROPOSAL NOTE 3: **"Pre-Owned/Reconditioned/Retired Rental"** shall be defined as equipment having been checked and inspected by a manufacturer-authorized dealer prior to sale and shall be no older than sixty (60) months as of the date of delivery. Proposers responding to this Proposal Invitation for **"Pre-Owned/Reconditioned/Retired Rental"** equipment must also be approved by the manufacturer to sell pre-owned/reconditioned/retired rental equipment for the brand submitted and must submit an approval letter from each manufacturer with the Proposal. Manufacturer authorization letters must include the regions in which equipment can be sold. Equipment listed as **"Pre-Owned/Reconditioned/Retired Rental"** shall be in good and working condition and shall include a minimum warranty of one-hundred eighty (180) days against any defect from workmanship and parts and shall cover equipment repairs and/or component replacement. Total equipment usage hours as displayed on the service meter will have a maximum of one thousand (1,000) hours per year of age and a minimum of seventy-five percent (75%) of wear remaining for tires, track, and/or ground engagement tools.

Vendors proposing multiple manufacturer product lines and/or catalog/price list per line item must submit the information as follows or proposal may not be considered:

- Select **"Add Alternate"** for each additional manufacturer product line and/or catalog/price list proposed
- Vendor’s must list one specific percentage discount for each manufacturer and/or catalog/price list listed

Item Attributes

1. State Name of Manufacturer Catalog or Product Price list Proposed with Discount Percentage

NOTE: Do not reference SKU, Reference Numbers, Websites, and/or "See Attached/Enclosed".

Hyundai Pricelist

3 **Section I: New Construction, Road, Bridge and Repair Equipment-PURCHASE ONLY**

Discount (%) off catalog/price list for **Asphalt Compactors, Accessories and Attachments.** Catalog/Price list MUST be included or proposal will not be considered.

Total: 25%

Item Notes: **PROPOSAL NOTE 1:** Vendors shall submit catalog(s)/price list(s) with their Proposal response or the Proposal will not be considered. Vendors shall submit catalog(s)/price list(s) with the Proposal in a readily available and readable electronic format, with Excel or searchable PDF preferred. **No paper catalogs or manufacturer/vendor websites will be accepted.**

PROPOSAL NOTE 2: A Vendor proposing shall be approved and authorized by the manufacturer to sell, install, and service the brand(s) of product(s) proposed. Proposers responding to this Proposal Invitation shall submit an approval letter from each manufacturer for each product line proposed. The requirement to provide an approval letter from the manufacturer applies to both seller and installers. Manufacturers responding directly to this Proposal Invitation, in lieu of an authorization letter, shall submit a written explanation that the company is the manufacturer of the product line(s) proposed. Dealer authorization agreements will not be accepted as a substitute for the manufacturer authorization letter.

The manufacturer authorization letters must include the following:
1. Composed on manufacturer letterhead (an email message is not a substitute for the letter),
2. Addressed to “The Local Government Purchasing Cooperative”,
3. Dated within the current calendar year,
4. List the regions in Texas and states that Vendor is authorized to sell, install, and service product(s) proposed, and
5. Name, Title, and Signature of Authorized Official from Manufacturer.

PROPOSAL NOTE 3: **"Pre-Owned/Reconditioned/Retired Rental"** shall be defined as equipment having been checked and inspected by a manufacturer-authorized dealer prior to sale and shall be no older than sixty (60) months as of the date of delivery. Proposers responding to this Proposal Invitation for **"Pre-Owned/Reconditioned/Retired Rental"** equipment must also be approved by the manufacturer to sell pre-owned/reconditioned/retired rental equipment for the brand submitted and must submit an approval letter from each manufacturer with the Proposal. Manufacturer authorization letters must include the regions in which equipment can be sold. Equipment listed as **"Pre-Owned/Reconditioned/Retired Rental"** shall be in good and working condition and shall include a minimum warranty of one-hundred eighty (180) days against any defect from workmanship and parts and shall cover equipment repairs and/or component replacement. Total equipment usage hours as displayed on the service meter will have a maximum of one thousand (1,000) hours per year of age and a minimum of seventy-five percent (75%) of wear remaining for tires, track, and/or ground engagement tools.

Vendors proposing multiple manufacturer product lines and/or catalog/price list per line item must submit the information as follows or proposal may not be considered:

- Select **"Add Alternate"** for each additional manufacturer product line and/or catalog/price list proposed
- Vendor’s must list one specific percentage discount for each manufacturer and/or catalog/price list listed

Item Attributes

1. State Name of Manufacturer Catalog or Product Price list Proposed with Discount Percentage

NOTE: Do not reference SKU, Reference Numbers, Websites, and/or "See Attached/Enclosed".

Case Compaction Price Book

4 **Section I: New Construction, Road, Bridge and Repair Equipment-PURCHASE ONLY**

Discount (%) off catalog/price list for **Asphalt Cutters, Accessories and Attachments.** Catalog/Price list MUST be included or proposal will not be considered.

No Bid

Item Notes: **PROPOSAL NOTE 1:** Vendors shall submit catalog(s)/price list(s) with their Proposal response or the Proposal will not be considered. Vendors shall submit catalog(s)/price list(s) with the Proposal in a readily available and readable electronic format, with Excel or searchable PDF preferred. **No paper catalogs or manufacturer/vendor websites will be accepted.**

PROPOSAL NOTE 2: A Vendor proposing shall be approved and authorized by the manufacturer to sell, install, and service the brand(s) of product(s) proposed. Proposers responding to this Proposal Invitation shall submit an approval letter from each manufacturer for each product line proposed. The requirement to provide an approval letter from the manufacturer applies to both seller and installers. Manufacturers responding directly to this Proposal Invitation, in lieu of an authorization letter, shall submit a written explanation that the company is the manufacturer of the product line(s) proposed. Dealer authorization agreements will not be accepted as a substitute for the manufacturer authorization letter.

The manufacturer authorization letters must include the following:
1. Composed on manufacturer letterhead (an email message is not a substitute for the letter),
2. Addressed to “The Local Government Purchasing Cooperative”,
3. Dated within the current calendar year,
4. List the regions in Texas and states that Vendor is authorized to sell, install, and service product(s) proposed, and
5. Name, Title, and Signature of Authorized Official from Manufacturer.

PROPOSAL NOTE 3: **"Pre-Owned/Reconditioned/Retired Rental"** shall be defined as equipment having been checked and inspected by a manufacturer-authorized dealer prior to sale and shall be no older than sixty (60) months as of the date of delivery. Proposers responding to this Proposal Invitation for **"Pre-Owned/Reconditioned/Retired Rental"** equipment must also be approved by the manufacturer to sell pre-owned/reconditioned/retired rental equipment for the brand submitted and must submit an approval letter from each manufacturer with the Proposal. Manufacturer authorization letters must include the regions in which equipment can be sold. Equipment listed as **"Pre-Owned/Reconditioned/Retired Rental"** shall be in good and working condition and shall include a minimum warranty of one-hundred eighty (180) days against any defect from workmanship and parts and shall cover equipment repairs and/or component replacement. Total equipment usage hours as displayed on the service meter will have a maximum of one thousand (1,000) hours per year of age and a minimum of seventy-five percent (75%) of wear remaining for tires, track, and/or ground engagement tools.

Vendors proposing multiple manufacturer product lines and/or catalog/price list per line item must submit the information as follows or proposal may not be considered:

- Select **"Add Alternate"** for each additional manufacturer product line and/or catalog/price list proposed
- Vendor’s must list one specific percentage discount for each manufacturer and/or catalog/price list listed

Item Attributes

1. State Name of Manufacturer Catalog or Product Price list Proposed with Discount Percentage

NOTE: Do not reference SKU, Reference Numbers, Websites, and/or "See Attached/Enclosed".

No response

5 **Section I: New Construction, Road, Bridge and Repair Equipment-PURCHASE ONLY**

Discount (%) off catalog/price list for **Asphalt Distributors, Accessories and Attachments.** Catalog/Price list MUST be included or proposal will not be considered. Asphalt Distributors, Accessories and Attachments.

No Bid

Item Notes: **PROPOSAL NOTE 1:** Vendors shall submit catalog(s)/price list(s) with their Proposal response or the Proposal will not be considered. Vendors shall submit catalog(s)/price list(s) with the Proposal in a readily available and readable electronic format, with Excel or searchable PDF preferred. **No paper catalogs or manufacturer/vendor websites will be accepted.**

PROPOSAL NOTE 2: A Vendor proposing shall be approved and authorized by the manufacturer to sell, install, and service the brand(s) of product(s) proposed. Proposers responding to this Proposal Invitation shall submit an approval letter from each manufacturer for each product line proposed. The requirement to provide an approval letter from the manufacturer applies to both seller and installers. Manufacturers responding directly to this Proposal Invitation, in lieu of an authorization letter, shall submit a written explanation that the company is the manufacturer of the product line(s) proposed. Dealer authorization agreements will not be accepted as a substitute for the manufacturer authorization letter.

The manufacturer authorization letters must include the following:
1. Composed on manufacturer letterhead (an email message is not a substitute for the letter),
2. Addressed to “The Local Government Purchasing Cooperative”,
3. Dated within the current calendar year,
4. List the regions in Texas and states that Vendor is authorized to sell, install, and service product(s) proposed, and
5. Name, Title, and Signature of Authorized Official from Manufacturer.

PROPOSAL NOTE 3: **"Pre-Owned/Reconditioned/Retired Rental"** shall be defined as equipment having been checked and inspected by a manufacturer-authorized dealer prior to sale and shall be no older than sixty (60) months as of the date of delivery. Proposers responding to this Proposal Invitation for **"Pre-Owned/Reconditioned/Retired Rental"** equipment must also be approved by the manufacturer to sell pre-owned/reconditioned/retired rental equipment for the brand submitted and must submit an approval letter from each manufacturer with the Proposal. Manufacturer authorization letters must include the regions in which equipment can be sold. Equipment listed as **"Pre-Owned/Reconditioned/Retired Rental"** shall be in good and working condition and shall include a minimum warranty of one-hundred eighty (180) days against any defect from workmanship and parts and shall cover equipment repairs and/or component replacement. Total equipment usage hours as displayed on the service meter will have a maximum of one thousand (1,000) hours per year of age and a minimum of seventy-five percent (75%) of wear remaining for tires, track, and/or ground engagement tools.

Vendors proposing multiple manufacturer product lines and/or catalog/price list per line item must submit the information as follows or proposal may not be considered:

- Select **"Add Alternate"** for each additional manufacturer product line and/or catalog/price list proposed
- Vendor’s must list one specific percentage discount for each manufacturer and/or catalog/price list listed

Item Attributes

1. State Name of Manufacturer Catalog or Product Price list Proposed with Discount Percentage

NOTE: Do not reference SKU, Reference Numbers, Websites, and/or "See Attached/Enclosed".

No response

6 **Section I: New Construction, Road, Bridge and Repair Equipment-PURCHASE ONLY**

Discount (%) off catalog/price list for **Asphalt Emulsion Tanks, Accessories and Attachments.** Catalog/Price list MUST be included or proposal will not be considered. Asphalt Distributors, Accessories and Attachments.

No Bid

Item Notes: **PROPOSAL NOTE 1:** Vendors shall submit catalog(s)/price list(s) with their Proposal response or the Proposal will not be considered. Vendors shall submit catalog(s)/price list(s) with the Proposal in a readily available and readable electronic format, with Excel or searchable PDF preferred. **No paper catalogs or manufacturer/vendor websites will be accepted.**

PROPOSAL NOTE 2: A Vendor proposing shall be approved and authorized by the manufacturer to sell, install, and service the brand(s) of product(s) proposed. Proposers responding to this Proposal Invitation shall submit an approval letter from each manufacturer for each product line proposed. The requirement to provide an approval letter from the manufacturer applies to both seller and installers. Manufacturers responding directly to this Proposal Invitation, in lieu of an authorization letter, shall submit a written explanation that the company is the manufacturer of the product line(s) proposed. Dealer authorization agreements will not be accepted as a substitute for the manufacturer authorization letter.

The manufacturer authorization letters must include the following:
1. Composed on manufacturer letterhead (an email message is not a substitute for the letter),
2. Addressed to “The Local Government Purchasing Cooperative”,
3. Dated within the current calendar year,
4. List the regions in Texas and states that Vendor is authorized to sell, install, and service product(s) proposed, and
5. Name, Title, and Signature of Authorized Official from Manufacturer.

PROPOSAL NOTE 3: **"Pre-Owned/Reconditioned/Retired Rental"** shall be defined as equipment having been checked and inspected by a manufacturer-authorized dealer prior to sale and shall be no older than sixty (60) months as of the date of delivery. Proposers responding to this Proposal Invitation for **"Pre-Owned/Reconditioned/Retired Rental"** equipment must also be approved by the manufacturer to sell pre-owned/reconditioned/retired rental equipment for the brand submitted and must submit an approval letter from each manufacturer with the Proposal. Manufacturer authorization letters must include the regions in which equipment can be sold. Equipment listed as **"Pre-Owned/Reconditioned/Retired Rental"** shall be in good and working condition and shall include a minimum warranty of one-hundred eighty (180) days against any defect from workmanship and parts and shall cover equipment repairs and/or component replacement. Total equipment usage hours as displayed on the service meter will have a maximum of one thousand (1,000) hours per year of age and a minimum of seventy-five percent (75%) of wear remaining for tires, track, and/or ground engagement tools.

Vendors proposing multiple manufacturer product lines and/or catalog/price list per line item must submit the information as follows or proposal may not be considered:

- Select **"Add Alternate"** for each additional manufacturer product line and/or catalog/price list proposed
- Vendor’s must list one specific percentage discount for each manufacturer and/or catalog/price list listed

Item Attributes

1. State Name of Manufacturer Catalog or Product Price list Proposed with Discount Percentage

NOTE: Do not reference SKU, Reference Numbers, Websites, and/or "See Attached/Enclosed".

No response

7 **Section I: New Construction, Road, Bridge and Repair Equipment-PURCHASE ONLY**

Discount (%) off catalog/price list for **Asphalt Pavers, Accessories and Attachments.** Catalog/Price list MUST be included or proposal will not be considered. Asphalt Distributors, Accessories and Attachments.

No Bid

Item Notes: **PROPOSAL NOTE 1:** Vendors shall submit catalog(s)/price list(s) with their Proposal response or the Proposal will not be considered. Vendors shall submit catalog(s)/price list(s) with the Proposal in a readily available and readable electronic format, with Excel or searchable PDF preferred. **No paper catalogs or manufacturer/vendor websites will be accepted.**

PROPOSAL NOTE 2: A Vendor proposing shall be approved and authorized by the manufacturer to sell, install, and service the brand(s) of product(s) proposed. Proposers responding to this Proposal Invitation shall submit an approval letter from each manufacturer for each product line proposed. The requirement to provide an approval letter from the manufacturer applies to both seller and installers. Manufacturers responding directly to this Proposal Invitation, in lieu of an authorization letter, shall submit a written explanation that the company is the manufacturer of the product line(s) proposed. Dealer authorization agreements will not be accepted as a substitute for the manufacturer authorization letter.

The manufacturer authorization letters must include the following:
1. Composed on manufacturer letterhead (an email message is not a substitute for the letter),
2. Addressed to “The Local Government Purchasing Cooperative”,
3. Dated within the current calendar year,
4. List the regions in Texas and states that Vendor is authorized to sell, install, and service product(s) proposed, and
5. Name, Title, and Signature of Authorized Official from Manufacturer.

PROPOSAL NOTE 3: **"Pre-Owned/Reconditioned/Retired Rental"** shall be defined as equipment having been checked and inspected by a manufacturer-authorized dealer prior to sale and shall be no older than sixty (60) months as of the date of delivery. Proposers responding to this Proposal Invitation for **"Pre-Owned/Reconditioned/Retired Rental"** equipment must also be approved by the manufacturer to sell pre-owned/reconditioned/retired rental equipment for the brand submitted and must submit an approval letter from each manufacturer with the Proposal. Manufacturer authorization letters must include the regions in which equipment can be sold. Equipment listed as **"Pre-Owned/Reconditioned/Retired Rental"** shall be in good and working condition and shall include a minimum warranty of one-hundred eighty (180) days against any defect from workmanship and parts and shall cover equipment repairs and/or component replacement. Total equipment usage hours as displayed on the service meter will have a maximum of one thousand (1,000) hours per year of age and a minimum of seventy-five percent (75%) of wear remaining for tires, track, and/or ground engagement tools.

Vendors proposing multiple manufacturer product lines and/or catalog/price list per line item must submit the information as follows or proposal may not be considered:

- Select **"Add Alternate"** for each additional manufacturer product line and/or catalog/price list proposed
- Vendor’s must list one specific percentage discount for each manufacturer and/or catalog/price list listed

Item Attributes

1. State Name of Manufacturer Catalog or Product Price list Proposed with Discount Percentage

NOTE: Do not reference SKU, Reference Numbers, Websites, and/or "See Attached/Enclosed".

No response

8 **Section I: New Construction, Road, Bridge and Repair Equipment-PURCHASE ONLY**

Discount (%) off catalog/price list for **Backhoe/Loaders, Accessories and Attachments.** Catalog/Price list MUST be included or proposal will not be considered. Asphalt Distributors, Accessories and Attachments.

Total: 25%

Item Notes: **PROPOSAL NOTE 1:** Vendors shall submit catalog(s)/price list(s) with their Proposal response or the Proposal will not be considered. Vendors shall submit catalog(s)/price list(s) with the Proposal in a readily available and readable electronic format, with Excel or searchable PDF preferred. **No paper catalogs or manufacturer/vendor websites will be accepted.**

PROPOSAL NOTE 2: A Vendor proposing shall be approved and authorized by the manufacturer to sell, install, and service the brand(s) of product(s) proposed. Proposers responding to this Proposal Invitation shall submit an approval letter from each manufacturer for each product line proposed. The requirement to provide an approval letter from the manufacturer applies to both seller and installers. Manufacturers responding directly to this Proposal Invitation, in lieu of an authorization letter, shall submit a written explanation that the company is the manufacturer of the product line(s) proposed. Dealer authorization agreements will not be accepted as a substitute for the manufacturer authorization letter.

The manufacturer authorization letters must include the following:
1. Composed on manufacturer letterhead (an email message is not a substitute for the letter),
2. Addressed to “The Local Government Purchasing Cooperative”,
3. Dated within the current calendar year,
4. List the regions in Texas and states that Vendor is authorized to sell, install, and service product(s) proposed, and
5. Name, Title, and Signature of Authorized Official from Manufacturer.

PROPOSAL NOTE 3: **"Pre-Owned/Reconditioned/Retired Rental"** shall be defined as equipment having been checked and inspected by a manufacturer-authorized dealer prior to sale and shall be no older than sixty (60) months as of the date of delivery. Proposers responding to this Proposal Invitation for **"Pre-Owned/Reconditioned/Retired Rental"** equipment must also be approved by the manufacturer to sell pre-owned/reconditioned/retired rental equipment for the brand submitted and must submit an approval letter from each manufacturer with the Proposal. Manufacturer authorization letters must include the regions in which equipment can be sold. Equipment listed as **"Pre-Owned/Reconditioned/Retired Rental"** shall be in good and working condition and shall include a minimum warranty of one-hundred eighty (180) days against any defect from workmanship and parts and shall cover equipment repairs and/or component replacement. Total equipment usage hours as displayed on the service meter will have a maximum of one thousand (1,000) hours per year of age and a minimum of seventy-five percent (75%) of wear remaining for tires, track, and/or ground engagement tools.

Vendors proposing multiple manufacturer product lines and/or catalog/price list per line item must submit the information as follows or proposal may not be considered:

- Select **"Add Alternate"** for each additional manufacturer product line and/or catalog/price list proposed
- Vendor’s must list one specific percentage discount for each manufacturer and/or catalog/price list listed

Item Attributes

1. State Name of Manufacturer Catalog or Product Price list Proposed with Discount Percentage

NOTE: Do not reference SKU, Reference Numbers, Websites, and/or "See Attached/Enclosed".

Case Backhoe Price Book

9 **Section I: New Construction, Road, Bridge and Repair Equipment-PURCHASE ONLY**

Discount (%) off catalog/price list for **Chip Spreaders, Accessories and Attachments.** Catalog/Price list MUST be included or proposal will not be considered. Asphalt Distributors, Accessories and Attachments.

No Bid

Item Notes: **PROPOSAL NOTE 1:** Vendors shall submit catalog(s)/price list(s) with their Proposal response or the Proposal will not be considered. Vendors shall submit catalog(s)/price list(s) with the Proposal in a readily available and readable electronic format, with Excel or searchable PDF preferred. **No paper catalogs or manufacturer/vendor websites will be accepted.**

PROPOSAL NOTE 2: A Vendor proposing shall be approved and authorized by the manufacturer to sell, install, and service the brand(s) of product(s) proposed. Proposers responding to this Proposal Invitation shall submit an approval letter from each manufacturer for each product line proposed. The requirement to provide an approval letter from the manufacturer applies to both seller and installers. Manufacturers responding directly to this Proposal Invitation, in lieu of an authorization letter, shall submit a written explanation that the company is the manufacturer of the product line(s) proposed. Dealer authorization agreements will not be accepted as a substitute for the manufacturer authorization letter.

The manufacturer authorization letters must include the following:
1. Composed on manufacturer letterhead (an email message is not a substitute for the letter),
2. Addressed to “The Local Government Purchasing Cooperative”,
3. Dated within the current calendar year,
4. List the regions in Texas and states that Vendor is authorized to sell, install, and service product(s) proposed, and
5. Name, Title, and Signature of Authorized Official from Manufacturer.

PROPOSAL NOTE 3: **"Pre-Owned/Reconditioned/Retired Rental"** shall be defined as equipment having been checked and inspected by a manufacturer-authorized dealer prior to sale and shall be no older than sixty (60) months as of the date of delivery. Proposers responding to this Proposal Invitation for **"Pre-Owned/Reconditioned/Retired Rental"** equipment must also be approved by the manufacturer to sell pre-owned/reconditioned/retired rental equipment for the brand submitted and must submit an approval letter from each manufacturer with the Proposal. Manufacturer authorization letters must include the regions in which equipment can be sold. Equipment listed as **"Pre-Owned/Reconditioned/Retired Rental"** shall be in good and working condition and shall include a minimum warranty of one-hundred eighty (180) days against any defect from workmanship and parts and shall cover equipment repairs and/or component replacement. Total equipment usage hours as displayed on the service meter will have a maximum of one thousand (1,000) hours per year of age and a minimum of seventy-five percent (75%) of wear remaining for tires, track, and/or ground engagement tools.

Vendors proposing multiple manufacturer product lines and/or catalog/price list per line item must submit the information as follows or proposal may not be considered:

- Select **"Add Alternate"** for each additional manufacturer product line and/or catalog/price list proposed
- Vendor’s must list one specific percentage discount for each manufacturer and/or catalog/price list listed

Item Attributes

1. State Name of Manufacturer Catalog or Product Price list Proposed with Discount Percentage

NOTE: Do not reference SKU, Reference Numbers, Websites, and/or "See Attached/Enclosed".

No response

10

Section I: New Construction, Road, Bridge and Repair Equipment-PURCHASE ONLY

Discount (%) off catalog/price list for **Cold Planers, Accessories and Attachments.** Catalog/Price list MUST be included or proposal will not be considered. Asphalt Distributors, Accessories and Attachments.

No Bid

Item Notes: **PROPOSAL NOTE 1:** Vendors shall submit catalog(s)/price list(s) with their Proposal response or the Proposal will not be considered. Vendors shall submit catalog(s)/price list(s) with the Proposal in a readily available and readable electronic format, with Excel or searchable PDF preferred. **No paper catalogs or manufacturer/vendor websites will be accepted.**

PROPOSAL NOTE 2: A Vendor proposing shall be approved and authorized by the manufacturer to sell, install, and service the brand(s) of product(s) proposed. Proposers responding to this Proposal Invitation shall submit an approval letter from each manufacturer for each product line proposed. The requirement to provide an approval letter from the manufacturer applies to both seller and installers. Manufacturers responding directly to this Proposal Invitation, in lieu of an authorization letter, shall submit a written explanation that the company is the manufacturer of the product line(s) proposed. Dealer authorization agreements will not be accepted as a substitute for the manufacturer authorization letter.

The manufacturer authorization letters must include the following:
1. Composed on manufacturer letterhead (an email message is not a substitute for the letter),
2. Addressed to “The Local Government Purchasing Cooperative”,
3. Dated within the current calendar year,
4. List the regions in Texas and states that Vendor is authorized to sell, install, and service product(s) proposed, and
5. Name, Title, and Signature of Authorized Official from Manufacturer.

PROPOSAL NOTE 3: **"Pre-Owned/Reconditioned/Retired Rental"** shall be defined as equipment having been checked and inspected by a manufacturer-authorized dealer prior to sale and shall be no older than sixty (60) months as of the date of delivery. Proposers responding to this Proposal Invitation for **"Pre-Owned/Reconditioned/Retired Rental"** equipment must also be approved by the manufacturer to sell pre-owned/reconditioned/retired rental equipment for the brand submitted and must submit an approval letter from each manufacturer with the Proposal. Manufacturer authorization letters must include the regions in which equipment can be sold. Equipment listed as **"Pre-Owned/Reconditioned/Retired Rental"** shall be in good and working condition and shall include a minimum warranty of one-hundred eighty (180) days against any defect from workmanship and parts and shall cover equipment repairs and/or component replacement. Total equipment usage hours as displayed on the service meter will have a maximum of one thousand (1,000) hours per year of age and a minimum of seventy-five percent (75%) of wear remaining for tires, track, and/or ground engagement tools.

Vendors proposing multiple manufacturer product lines and/or catalog/price list per line item must submit the information as follows or proposal may not be considered:

- Select **"Add Alternate"** for each additional manufacturer product line and/or catalog/price list proposed
- Vendor’s must list one specific percentage discount for each manufacturer and/or catalog/price list listed

Item Attributes

1. State Name of Manufacturer Catalog or Product Price list Proposed with Discount Percentage

NOTE: Do not reference SKU, Reference Numbers, Websites, and/or "See Attached/Enclosed".

No response

11

Section I: New Construction, Road, Bridge and Repair Equipment-PURCHASE ONLY

Discount (%) off catalog/price list for **Conveyors, Accessories and Attachments.** Catalog/Price list MUST be included or proposal will not be considered. Asphalt Distributors, Accessories and Attachments.

No Bid

Item Notes: **PROPOSAL NOTE 1:** Vendors shall submit catalog(s)/price list(s) with their Proposal response or the Proposal will not be considered. Vendors shall submit catalog(s)/price list(s) with the Proposal in a readily available and readable electronic format, with Excel or searchable PDF preferred. **No paper catalogs or manufacturer/vendor websites will be accepted.**

PROPOSAL NOTE 2: A Vendor proposing shall be approved and authorized by the manufacturer to sell, install, and service the brand(s) of product(s) proposed. Proposers responding to this Proposal Invitation shall submit an approval letter from each manufacturer for each product line proposed. The requirement to provide an approval letter from the manufacturer applies to both seller and installers. Manufacturers responding directly to this Proposal Invitation, in lieu of an authorization letter, shall submit a written explanation that the company is the manufacturer of the product line(s) proposed. Dealer authorization agreements will not be accepted as a substitute for the manufacturer authorization letter.

The manufacturer authorization letters must include the following:
1. Composed on manufacturer letterhead (an email message is not a substitute for the letter),
2. Addressed to “The Local Government Purchasing Cooperative”,
3. Dated within the current calendar year,
4. List the regions in Texas and states that Vendor is authorized to sell, install, and service product(s) proposed, and
5. Name, Title, and Signature of Authorized Official from Manufacturer.

PROPOSAL NOTE 3: **"Pre-Owned/Reconditioned/Retired Rental"** shall be defined as equipment having been checked and inspected by a manufacturer-authorized dealer prior to sale and shall be no older than sixty (60) months as of the date of delivery. Proposers responding to this Proposal Invitation for **"Pre-Owned/Reconditioned/Retired Rental"** equipment must also be approved by the manufacturer to sell pre-owned/reconditioned/retired rental equipment for the brand submitted and must submit an approval letter from each manufacturer with the Proposal. Manufacturer authorization letters must include the regions in which equipment can be sold. Equipment listed as **"Pre-Owned/Reconditioned/Retired Rental"** shall be in good and working condition and shall include a minimum warranty of one-hundred eighty (180) days against any defect from workmanship and parts and shall cover equipment repairs and/or component replacement. Total equipment usage hours as displayed on the service meter will have a maximum of one thousand (1,000) hours per year of age and a minimum of seventy-five percent (75%) of wear remaining for tires, track, and/or ground engagement tools.

Vendors proposing multiple manufacturer product lines and/or catalog/price list per line item must submit the information as follows or proposal may not be considered:

- Select **"Add Alternate"** for each additional manufacturer product line and/or catalog/price list proposed
- Vendor’s must list one specific percentage discount for each manufacturer and/or catalog/price list listed

Item Attributes

1. State Name of Manufacturer Catalog or Product Price list Proposed with Discount Percentage

NOTE: Do not reference SKU, Reference Numbers, Websites, and/or "See Attached/Enclosed".

No response

12

Section I: New Construction, Road, Bridge and Repair Equipment-PURCHASE ONLY

Discount (%) off catalog/price list for **Curb and Gutter Machines, Accessories and Attachments.** Catalog/Price list MUST be included or proposal will not be considered. Asphalt Distributors, Accessories and Attachments.

No Bid

Item Notes: **PROPOSAL NOTE 1:** Vendors shall submit catalog(s)/price list(s) with their Proposal response or the Proposal will not be considered. Vendors shall submit catalog(s)/price list(s) with the Proposal in a readily available and readable electronic format, with Excel or searchable PDF preferred. **No paper catalogs or manufacturer/vendor websites will be accepted.**

PROPOSAL NOTE 2: A Vendor proposing shall be approved and authorized by the manufacturer to sell, install, and service the brand(s) of product(s) proposed. Proposers responding to this Proposal Invitation shall submit an approval letter from each manufacturer for each product line proposed. The requirement to provide an approval letter from the manufacturer applies to both seller and installers. Manufacturers responding directly to this Proposal Invitation, in lieu of an authorization letter, shall submit a written explanation that the company is the manufacturer of the product line(s) proposed. Dealer authorization agreements will not be accepted as a substitute for the manufacturer authorization letter.

The manufacturer authorization letters must include the following:
1. Composed on manufacturer letterhead (an email message is not a substitute for the letter),
2. Addressed to “The Local Government Purchasing Cooperative”,
3. Dated within the current calendar year,
4. List the regions in Texas and states that Vendor is authorized to sell, install, and service product(s) proposed, and
5. Name, Title, and Signature of Authorized Official from Manufacturer.

PROPOSAL NOTE 3: **"Pre-Owned/Reconditioned/Retired Rental"** shall be defined as equipment having been checked and inspected by a manufacturer-authorized dealer prior to sale and shall be no older than sixty (60) months as of the date of delivery. Proposers responding to this Proposal Invitation for **"Pre-Owned/Reconditioned/Retired Rental"** equipment must also be approved by the manufacturer to sell pre-owned/reconditioned/retired rental equipment for the brand submitted and must submit an approval letter from each manufacturer with the Proposal. Manufacturer authorization letters must include the regions in which equipment can be sold. Equipment listed as **"Pre-Owned/Reconditioned/Retired Rental"** shall be in good and working condition and shall include a minimum warranty of one-hundred eighty (180) days against any defect from workmanship and parts and shall cover equipment repairs and/or component replacement. Total equipment usage hours as displayed on the service meter will have a maximum of one thousand (1,000) hours per year of age and a minimum of seventy-five percent (75%) of wear remaining for tires, track, and/or ground engagement tools.

Vendors proposing multiple manufacturer product lines and/or catalog/price list per line item must submit the information as follows or proposal may not be considered:

- Select **"Add Alternate"** for each additional manufacturer product line and/or catalog/price list proposed
- Vendor’s must list one specific percentage discount for each manufacturer and/or catalog/price list listed

Item Attributes

1. State Name of Manufacturer Catalog or Product Price list Proposed with Discount Percentage

NOTE: Do not reference SKU, Reference Numbers, Websites, and/or "See Attached/Enclosed".

No response

13

Section I: New Construction, Road, Bridge and Repair Equipment-PURCHASE ONLY

Discount (%) off catalog/price list for **Forklifts, Accessories and Attachments.** Catalog/Price list MUST be included or proposal will not be considered. Asphalt Distributors, Accessories and Attachments.

Total: 25%

Item Notes: **PROPOSAL NOTE 1:** Vendors shall submit catalog(s)/price list(s) with their Proposal response or the Proposal will not be considered. Vendors shall submit catalog(s)/price list(s) with the Proposal in a readily available and readable electronic format, with Excel or searchable PDF preferred. **No paper catalogs or manufacturer/vendor websites will be accepted.**

PROPOSAL NOTE 2: A Vendor proposing shall be approved and authorized by the manufacturer to sell, install, and service the brand(s) of product(s) proposed. Proposers responding to this Proposal Invitation shall submit an approval letter from each manufacturer for each product line proposed. The requirement to provide an approval letter from the manufacturer applies to both seller and installers. Manufacturers responding directly to this Proposal Invitation, in lieu of an authorization letter, shall submit a written explanation that the company is the manufacturer of the product line(s) proposed. Dealer authorization agreements will not be accepted as a substitute for the manufacturer authorization letter.

The manufacturer authorization letters must include the following:
1. Composed on manufacturer letterhead (an email message is not a substitute for the letter),
2. Addressed to “The Local Government Purchasing Cooperative”,
3. Dated within the current calendar year,
4. List the regions in Texas and states that Vendor is authorized to sell, install, and service product(s) proposed, and
5. Name, Title, and Signature of Authorized Official from Manufacturer.

PROPOSAL NOTE 3: **"Pre-Owned/Reconditioned/Retired Rental"** shall be defined as equipment having been checked and inspected by a manufacturer-authorized dealer prior to sale and shall be no older than sixty (60) months as of the date of delivery. Proposers responding to this Proposal Invitation for **"Pre-Owned/Reconditioned/Retired Rental"** equipment must also be approved by the manufacturer to sell pre-owned/reconditioned/retired rental equipment for the brand submitted and must submit an approval letter from each manufacturer with the Proposal. Manufacturer authorization letters must include the regions in which equipment can be sold. Equipment listed as **"Pre-Owned/Reconditioned/Retired Rental"** shall be in good and working condition and shall include a minimum warranty of one-hundred eighty (180) days against any defect from workmanship and parts and shall cover equipment repairs and/or component replacement. Total equipment usage hours as displayed on the service meter will have a maximum of one thousand (1,000) hours per year of age and a minimum of seventy-five percent (75%) of wear remaining for tires, track, and/or ground engagement tools.

Vendors proposing multiple manufacturer product lines and/or catalog/price list per line item must submit the information as follows or proposal may not be considered:

- Select **"Add Alternate"** for each additional manufacturer product line and/or catalog/price list proposed
- Vendor’s must list one specific percentage discount for each manufacturer and/or catalog/price list listed

Item Attributes

1. State Name of Manufacturer Catalog or Product Price list Proposed with Discount Percentage

NOTE: Do not reference SKU, Reference Numbers, Websites, and/or "See Attached/Enclosed".

Case Forklift Price Book

Alternate 1

Section I: New Construction, Road, Bridge and Repair Equipment-PURCHASE ONLY

Discount (%) off catalog/price list for **Forklifts, Accessories and Attachments.** Catalog/Price list MUST be included or proposal will not be considered. Asphalt Distributors, Accessories and Attachments.

Total: 15%

Item Attributes

1. State Name of Manufacturer Catalog or Product Price list Proposed with Discount Percentage

NOTE: Do not reference SKU, Reference Numbers, Websites, and/or "See Attached/Enclosed".

Skyjack Price Book

14

Section I: New Construction, Road, Bridge and Repair Equipment-PURCHASE ONLY

Discount (%) off catalog/price list for **Generator Equipment and Electrical Systems, Accessories and Attachments.** Catalog/Price list MUST be included or proposal will not be considered. Asphalt Distributors, Accessories and Attachments.

No Bid

Item Notes: **PROPOSAL NOTE 1:** Vendors shall submit catalog(s)/price list(s) with their Proposal response or the Proposal will not be considered. Vendors shall submit catalog(s)/price list(s) with the Proposal in a readily available and readable electronic format, with Excel or searchable PDF preferred. **No paper catalogs or manufacturer/vendor websites will be accepted.**

PROPOSAL NOTE 2: A Vendor proposing shall be approved and authorized by the manufacturer to sell, install, and service the brand(s) of product(s) proposed. Proposers responding to this Proposal Invitation shall submit an approval letter from each manufacturer for each product line proposed. The requirement to provide an approval letter from the manufacturer applies to both seller and installers. Manufacturers responding directly to this Proposal Invitation, in lieu of an authorization letter, shall submit a written explanation that the company is the manufacturer of the product line(s) proposed. Dealer authorization agreements will not be accepted as a substitute for the manufacturer authorization letter.

The manufacturer authorization letters must include the following:
1. Composed on manufacturer letterhead (an email message is not a substitute for the letter),
2. Addressed to “The Local Government Purchasing Cooperative”,
3. Dated within the current calendar year,
4. List the regions in Texas and states that Vendor is authorized to sell, install, and service product(s) proposed, and
5. Name, Title, and Signature of Authorized Official from Manufacturer.

PROPOSAL NOTE 3: **"Pre-Owned/Reconditioned/Retired Rental"** shall be defined as equipment having been checked and inspected by a manufacturer-authorized dealer prior to sale and shall be no older than sixty (60) months as of the date of delivery. Proposers responding to this Proposal Invitation for **"Pre-Owned/Reconditioned/Retired Rental"** equipment must also be approved by the manufacturer to sell pre-owned/reconditioned/retired rental equipment for the brand submitted and must submit an approval letter from each manufacturer with the Proposal. Manufacturer authorization letters must include the regions in which equipment can be sold. Equipment listed as **"Pre-Owned/Reconditioned/Retired Rental"** shall be in good and working condition and shall include a minimum warranty of one-hundred eighty (180) days against any defect from workmanship and parts and shall cover equipment repairs and/or component replacement. Total equipment usage hours as displayed on the service meter will have a maximum of one thousand (1,000) hours per year of age and a minimum of seventy-five percent (75%) of wear remaining for tires, track, and/or ground engagement tools.

Vendors proposing multiple manufacturer product lines and/or catalog/price list per line item must submit the information as follows or proposal may not be considered:

- Select **"Add Alternate"** for each additional manufacturer product line and/or catalog/price list proposed
- Vendor’s must list one specific percentage discount for each manufacturer and/or catalog/price list listed

Item Attributes

1. State Name of Manufacturer Catalog or Product Price list Proposed with Discount Percentage

NOTE: Do not reference SKU, Reference Numbers, Websites, and/or "See Attached/Enclosed".

No response

15

Section I: New Construction, Road, Bridge and Repair Equipment-PURCHASE ONLY

Discount (%) off catalog/price list for **Hydraulic Hammers, Accessories and Attachments.** Catalog/Price list MUST be included or proposal will not be considered. Asphalt Distributors, Accessories and Attachments.

No Bid

Item Notes: **PROPOSAL NOTE 1:** Vendors shall submit catalog(s)/price list(s) with their Proposal response or the Proposal will not be considered. Vendors shall submit catalog(s)/price list(s) with the Proposal in a readily available and readable electronic format, with Excel or searchable PDF preferred. **No paper catalogs or manufacturer/vendor websites will be accepted.**

PROPOSAL NOTE 2: A Vendor proposing shall be approved and authorized by the manufacturer to sell, install, and service the brand(s) of product(s) proposed. Proposers responding to this Proposal Invitation shall submit an approval letter from each manufacturer for each product line proposed. The requirement to provide an approval letter from the manufacturer applies to both seller and installers. Manufacturers responding directly to this Proposal Invitation, in lieu of an authorization letter, shall submit a written explanation that the company is the manufacturer of the product line(s) proposed. Dealer authorization agreements will not be accepted as a substitute for the manufacturer authorization letter.

The manufacturer authorization letters must include the following:
1. Composed on manufacturer letterhead (an email message is not a substitute for the letter),
2. Addressed to “The Local Government Purchasing Cooperative”,
3. Dated within the current calendar year,
4. List the regions in Texas and states that Vendor is authorized to sell, install, and service product(s) proposed, and
5. Name, Title, and Signature of Authorized Official from Manufacturer.

PROPOSAL NOTE 3: **"Pre-Owned/Reconditioned/Retired Rental"** shall be defined as equipment having been checked and inspected by a manufacturer-authorized dealer prior to sale and shall be no older than sixty (60) months as of the date of delivery. Proposers responding to this Proposal Invitation for **"Pre-Owned/Reconditioned/Retired Rental"** equipment must also be approved by the manufacturer to sell pre-owned/reconditioned/retired rental equipment for the brand submitted and must submit an approval letter from each manufacturer with the Proposal. Manufacturer authorization letters must include the regions in which equipment can be sold. Equipment listed as **"Pre-Owned/Reconditioned/Retired Rental"** shall be in good and working condition and shall include a minimum warranty of one-hundred eighty (180) days against any defect from workmanship and parts and shall cover equipment repairs and/or component replacement. Total equipment usage hours as displayed on the service meter will have a maximum of one thousand (1,000) hours per year of age and a minimum of seventy-five percent (75%) of wear remaining for tires, track, and/or ground engagement tools.

Vendors proposing multiple manufacturer product lines and/or catalog/price list per line item must submit the information as follows or proposal may not be considered:

- Select **"Add Alternate"** for each additional manufacturer product line and/or catalog/price list proposed
- Vendor’s must list one specific percentage discount for each manufacturer and/or catalog/price list listed

Item Attributes

1. State Name of Manufacturer Catalog or Product Price list Proposed with Discount Percentage

NOTE: Do not reference SKU, Reference Numbers, Websites, and/or "See Attached/Enclosed".

No response

16

Section I: New Construction, Road, Bridge and Repair Equipment-PURCHASE ONLY

Discount (%) off catalog/price list for **Integrated Tool Carriers, Accessories and Attachments.** Catalog/Price list MUST be included or proposal will not be considered. Asphalt Distributors, Accessories and Attachments.

Total: 25%

Item Notes: **PROPOSAL NOTE 1:** Vendors shall submit catalog(s)/price list(s) with their Proposal response or the Proposal will not be considered. Vendors shall submit catalog(s)/price list(s) with the Proposal in a readily available and readable electronic format, with Excel or searchable PDF preferred. **No paper catalogs or manufacturer/vendor websites will be accepted.**

PROPOSAL NOTE 2: A Vendor proposing shall be approved and authorized by the manufacturer to sell, install, and service the brand(s) of product(s) proposed. Proposers responding to this Proposal Invitation shall submit an approval letter from each manufacturer for each product line proposed. The requirement to provide an approval letter from the manufacturer applies to both seller and installers. Manufacturers responding directly to this Proposal Invitation, in lieu of an authorization letter, shall submit a written explanation that the company is the manufacturer of the product line(s) proposed. Dealer authorization agreements will not be accepted as a substitute for the manufacturer authorization letter.

The manufacturer authorization letters must include the following:
1. Composed on manufacturer letterhead (an email message is not a substitute for the letter),
2. Addressed to “The Local Government Purchasing Cooperative”,
3. Dated within the current calendar year,
4. List the regions in Texas and states that Vendor is authorized to sell, install, and service product(s) proposed, and
5. Name, Title, and Signature of Authorized Official from Manufacturer.

PROPOSAL NOTE 3: **"Pre-Owned/Reconditioned/Retired Rental"** shall be defined as equipment having been checked and inspected by a manufacturer-authorized dealer prior to sale and shall be no older than sixty (60) months as of the date of delivery. Proposers responding to this Proposal Invitation for **"Pre-Owned/Reconditioned/Retired Rental"** equipment must also be approved by the manufacturer to sell pre-owned/reconditioned/retired rental equipment for the brand submitted and must submit an approval letter from each manufacturer with the Proposal. Manufacturer authorization letters must include the regions in which equipment can be sold. Equipment listed as **"Pre-Owned/Reconditioned/Retired Rental"** shall be in good and working condition and shall include a minimum warranty of one-hundred eighty (180) days against any defect from workmanship and parts and shall cover equipment repairs and/or component replacement. Total equipment usage hours as displayed on the service meter will have a maximum of one thousand (1,000) hours per year of age and a minimum of seventy-five percent (75%) of wear remaining for tires, track, and/or ground engagement tools.

Vendors proposing multiple manufacturer product lines and/or catalog/price list per line item must submit the information as follows or proposal may not be considered:

- Select **"Add Alternate"** for each additional manufacturer product line and/or catalog/price list proposed
- Vendor’s must list one specific percentage discount for each manufacturer and/or catalog/price list listed

Item Attributes

1. State Name of Manufacturer Catalog or Product Price list Proposed with Discount Percentage

NOTE: Do not reference SKU, Reference Numbers, Websites, and/or "See Attached/Enclosed".

Case Wheel Loader Price Book

Alternate 1

Section I: New Construction, Road, Bridge and Repair Equipment-PURCHASE ONLY

Discount (%) off catalog/price list for **Integrated Tool Carriers, Accessories and Attachments.** Catalog/Price list MUST be included or proposal will not be considered. Asphalt Distributors, Accessories and Attachments.

Total: 35%

Item Attributes

1. State Name of Manufacturer Catalog or Product Price list Proposed with Discount Percentage

NOTE: Do not reference SKU, Reference Numbers, Websites, and/or "See Attached/Enclosed".

Hyundai Pricelist

17

Section I: New Construction, Road, Bridge and Repair Equipment-PURCHASE ONLY

Discount (%) off catalog/price list for **Jack Hammers, Accessories and Attachments.** Catalog/Price list MUST be included or proposal will not be considered. Asphalt Distributors, Accessories and Attachments.

No Bid

Item Notes: **PROPOSAL NOTE 1:** Vendors shall submit catalog(s)/price list(s) with their Proposal response or the Proposal will not be considered. Vendors shall submit catalog(s)/price list(s) with the Proposal in a readily available and readable electronic format, with Excel or searchable PDF preferred. **No paper catalogs or manufacturer/vendor websites will be accepted.**

PROPOSAL NOTE 2: A Vendor proposing shall be approved and authorized by the manufacturer to sell, install, and service the brand(s) of product(s) proposed. Proposers responding to this Proposal Invitation shall submit an approval letter from each manufacturer for each product line proposed. The requirement to provide an approval letter from the manufacturer applies to both seller and installers. Manufacturers responding directly to this Proposal Invitation, in lieu of an authorization letter, shall submit a written explanation that the company is the manufacturer of the product line(s) proposed. Dealer authorization agreements will not be accepted as a substitute for the manufacturer authorization letter.

The manufacturer authorization letters must include the following:
1. Composed on manufacturer letterhead (an email message is not a substitute for the letter),
2. Addressed to “The Local Government Purchasing Cooperative”,
3. Dated within the current calendar year,
4. List the regions in Texas and states that Vendor is authorized to sell, install, and service product(s) proposed, and
5. Name, Title, and Signature of Authorized Official from Manufacturer.

PROPOSAL NOTE 3: **"Pre-Owned/Reconditioned/Retired Rental"** shall be defined as equipment having been checked and inspected by a manufacturer-authorized dealer prior to sale and shall be no older than sixty (60) months as of the date of delivery. Proposers responding to this Proposal Invitation for **"Pre-Owned/Reconditioned/Retired Rental"** equipment must also be approved by the manufacturer to sell pre-owned/reconditioned/retired rental equipment for the brand submitted and must submit an approval letter from each manufacturer with the Proposal. Manufacturer authorization letters must include the regions in which equipment can be sold. Equipment listed as **"Pre-Owned/Reconditioned/Retired Rental"** shall be in good and working condition and shall include a minimum warranty of one-hundred eighty (180) days against any defect from workmanship and parts and shall cover equipment repairs and/or component replacement. Total equipment usage hours as displayed on the service meter will have a maximum of one thousand (1,000) hours per year of age and a minimum of seventy-five percent (75%) of wear remaining for tires, track, and/or ground engagement tools.

Vendors proposing multiple manufacturer product lines and/or catalog/price list per line item must submit the information as follows or proposal may not be considered:

- Select **"Add Alternate"** for each additional manufacturer product line and/or catalog/price list proposed
- Vendor’s must list one specific percentage discount for each manufacturer and/or catalog/price list listed

Item Attributes

1. State Name of Manufacturer Catalog or Product Price list Proposed with Discount Percentage

NOTE: Do not reference SKU, Reference Numbers, Websites, and/or "See Attached/Enclosed".

No response

18

Section I: New Construction, Road, Bridge and Repair Equipment-PURCHASE ONLY

Discount (%) off catalog/price list for **Knuckle Boom Loaders, Accessories and Attachments.** Catalog/Price list MUST be included or proposal will not be considered. Asphalt Distributors, Accessories and Attachments.

No Bid

Item Notes: **PROPOSAL NOTE 1:** Vendors shall submit catalog(s)/price list(s) with their Proposal response or the Proposal will not be considered. Vendors shall submit catalog(s)/price list(s) with the Proposal in a readily available and readable electronic format, with Excel or searchable PDF preferred. **No paper catalogs or manufacturer/vendor websites will be accepted.**

PROPOSAL NOTE 2: A Vendor proposing shall be approved and authorized by the manufacturer to sell, install, and service the brand(s) of product(s) proposed. Proposers responding to this Proposal Invitation shall submit an approval letter from each manufacturer for each product line proposed. The requirement to provide an approval letter from the manufacturer applies to both seller and installers. Manufacturers responding directly to this Proposal Invitation, in lieu of an authorization letter, shall submit a written explanation that the company is the manufacturer of the product line(s) proposed. Dealer authorization agreements will not be accepted as a substitute for the manufacturer authorization letter.

The manufacturer authorization letters must include the following:
1. Composed on manufacturer letterhead (an email message is not a substitute for the letter),
2. Addressed to “The Local Government Purchasing Cooperative”,
3. Dated within the current calendar year,
4. List the regions in Texas and states that Vendor is authorized to sell, install, and service product(s) proposed, and
5. Name, Title, and Signature of Authorized Official from Manufacturer.

PROPOSAL NOTE 3: **"Pre-Owned/Reconditioned/Retired Rental"** shall be defined as equipment having been checked and inspected by a manufacturer-authorized dealer prior to sale and shall be no older than sixty (60) months as of the date of delivery. Proposers responding to this Proposal Invitation for **"Pre-Owned/Reconditioned/Retired Rental"** equipment must also be approved by the manufacturer to sell pre-owned/reconditioned/retired rental equipment for the brand submitted and must submit an approval letter from each manufacturer with the Proposal. Manufacturer authorization letters must include the regions in which equipment can be sold. Equipment listed as **"Pre-Owned/Reconditioned/Retired Rental"** shall be in good and working condition and shall include a minimum warranty of one-hundred eighty (180) days against any defect from workmanship and parts and shall cover equipment repairs and/or component replacement. Total equipment usage hours as displayed on the service meter will have a maximum of one thousand (1,000) hours per year of age and a minimum of seventy-five percent (75%) of wear remaining for tires, track, and/or ground engagement tools.

Vendors proposing multiple manufacturer product lines and/or catalog/price list per line item must submit the information as follows or proposal may not be considered:

- Select **"Add Alternate"** for each additional manufacturer product line and/or catalog/price list proposed
- Vendor’s must list one specific percentage discount for each manufacturer and/or catalog/price list listed

Item Attributes

1. State Name of Manufacturer Catalog or Product Price list Proposed with Discount Percentage

NOTE: Do not reference SKU, Reference Numbers, Websites, and/or "See Attached/Enclosed".

No response

19

Section I: New Construction, Road, Bridge and Repair Equipment-PURCHASE ONLY

Discount (%) off catalog/price list for **Material Handling Equipment, Accessories and Attachments.** Catalog/Price list MUST be included or proposal will not be considered. Asphalt Distributors, Accessories and Attachments.

Total: 15%

Item Notes: **PROPOSAL NOTE 1:** Vendors shall submit catalog(s)/price list(s) with their Proposal response or the Proposal will not be considered. Vendors shall submit catalog(s)/price list(s) with the Proposal in a readily available and readable electronic format, with Excel or searchable PDF preferred. **No paper catalogs or manufacturer/vendor websites will be accepted.**

PROPOSAL NOTE 2: A Vendor proposing shall be approved and authorized by the manufacturer to sell, install, and service the brand(s) of product(s) proposed. Proposers responding to this Proposal Invitation shall submit an approval letter from each manufacturer for each product line proposed. The requirement to provide an approval letter from the manufacturer applies to both seller and installers. Manufacturers responding directly to this Proposal Invitation, in lieu of an authorization letter, shall submit a written explanation that the company is the manufacturer of the product line(s) proposed. Dealer authorization agreements will not be accepted as a substitute for the manufacturer authorization letter.

The manufacturer authorization letters must include the following:

1. Composed on manufacturer letterhead (an email message is not a substitute for the letter),
2. Addressed to “The Local Government Purchasing Cooperative”,
3. Dated within the current calendar year,
4. List the regions in Texas and states that Vendor is authorized to sell, install, and service product(s) proposed, and
5. Name, Title, and Signature of Authorized Official from Manufacturer.

PROPOSAL NOTE 3: **"Pre-Owned/Reconditioned/Retired Rental"** shall be defined as equipment having been checked and inspected by a manufacturer-authorized dealer prior to sale and shall be no older than sixty (60) months as of the date of delivery. Proposers responding to this Proposal Invitation for **"Pre-Owned/Reconditioned/Retired Rental"** equipment must also be approved by the manufacturer to sell pre-owned/reconditioned/retired rental equipment for the brand submitted and must submit an approval letter from each manufacturer with the Proposal. Manufacturer authorization letters must include the regions in which equipment can be sold. Equipment listed as **"Pre-Owned/Reconditioned/Retired Rental"** shall be in good and working condition and shall include a minimum warranty of one-hundred eighty (180) days against any defect from workmanship and parts and shall cover equipment repairs and/or component replacement. Total equipment usage hours as displayed on the service meter will have a maximum of one thousand (1,000) hours per year of age and a minimum of seventy-five percent (75%) of wear remaining for tires, track, and/or ground engagement tools.

Vendors proposing multiple manufacturer product lines and/or catalog/price list per line item must submit the information as follows or proposal may not be considered:

- Select **"Add Alternate"** for each additional manufacturer product line and/or catalog/price list proposed
- Vendor’s must list one specific percentage discount for each manufacturer and/or catalog/price list listed

Item Attributes

1. State Name of Manufacturer Catalog or Product Price list Proposed with Discount Percentage

NOTE: Do not reference SKU, Reference Numbers, Websites, and/or "See Attached/Enclosed".

Skyjack Price Book

20

Section I: New Construction, Road, Bridge and Repair Equipment-PURCHASE ONLY

Discount (%) off catalog/price list for **Melter Crack Sealers** (Truck or Trailer Mounted)**, Accessories and Attachments.** Catalog/Price list MUST be included or proposal will not be considered. Asphalt Distributors, Accessories and Attachments.

No Bid

Item Notes: **PROPOSAL NOTE 1:** Vendors shall submit catalog(s)/price list(s) with their Proposal response or the Proposal will not be considered. Vendors shall submit catalog(s)/price list(s) with the Proposal in a readily available and readable electronic format, with Excel or searchable PDF preferred. **No paper catalogs or manufacturer/vendor websites will be accepted.**

PROPOSAL NOTE 2: A Vendor proposing shall be approved and authorized by the manufacturer to sell, install, and service the brand(s) of product(s) proposed. Proposers responding to this Proposal Invitation shall submit an approval letter from each manufacturer for each product line proposed. The requirement to provide an approval letter from the manufacturer applies to both seller and installers. Manufacturers responding directly to this Proposal Invitation, in lieu of an authorization letter, shall submit a written explanation that the company is the manufacturer of the product line(s) proposed. Dealer authorization agreements will not be accepted as a substitute for the manufacturer authorization letter.

The manufacturer authorization letters must include the following:
1. Composed on manufacturer letterhead (an email message is not a substitute for the letter),
2. Addressed to “The Local Government Purchasing Cooperative”,
3. Dated within the current calendar year,
4. List the regions in Texas and states that Vendor is authorized to sell, install, and service product(s) proposed, and
5. Name, Title, and Signature of Authorized Official from Manufacturer.

PROPOSAL NOTE 3: **"Pre-Owned/Reconditioned/Retired Rental"** shall be defined as equipment having been checked and inspected by a manufacturer-authorized dealer prior to sale and shall be no older than sixty (60) months as of the date of delivery. Proposers responding to this Proposal Invitation for **"Pre-Owned/Reconditioned/Retired Rental"** equipment must also be approved by the manufacturer to sell pre-owned/reconditioned/retired rental equipment for the brand submitted and must submit an approval letter from each manufacturer with the Proposal. Manufacturer authorization letters must include the regions in which equipment can be sold. Equipment listed as **"Pre-Owned/Reconditioned/Retired Rental"** shall be in good and working condition and shall include a minimum warranty of one-hundred eighty (180) days against any defect from workmanship and parts and shall cover equipment repairs and/or component replacement. Total equipment usage hours as displayed on the service meter will have a maximum of one thousand (1,000) hours per year of age and a minimum of seventy-five percent (75%) of wear remaining for tires, track, and/or ground engagement tools.

Vendors proposing multiple manufacturer product lines and/or catalog/price list per line item must submit the information as follows or proposal may not be considered:

- Select **"Add Alternate"** for each additional manufacturer product line and/or catalog/price list proposed
- Vendor’s must list one specific percentage discount for each manufacturer and/or catalog/price list listed

Item Attributes

1. State Name of Manufacturer Catalog or Product Price list Proposed with Discount Percentage

NOTE: Do not reference SKU, Reference Numbers, Websites, and/or "See Attached/Enclosed".

No response

21

Section I: New Construction, Road, Bridge and Repair Equipment-PURCHASE ONLY

Discount (%) off catalog/price list for **Mini Excavators, Accessories and Attachments.** Catalog/Price list MUST be included or proposal will not be considered. Asphalt Distributors, Accessories and Attachments.

Total: 25%

Item Notes: **PROPOSAL NOTE 1:** Vendors shall submit catalog(s)/price list(s) with their Proposal response or the Proposal will not be considered. Vendors shall submit catalog(s)/price list(s) with the Proposal in a readily available and readable electronic format, with Excel or searchable PDF preferred. **No paper catalogs or manufacturer/vendor websites will be accepted.**

PROPOSAL NOTE 2: A Vendor proposing shall be approved and authorized by the manufacturer to sell, install, and service the brand(s) of product(s) proposed. Proposers responding to this Proposal Invitation shall submit an approval letter from each manufacturer for each product line proposed. The requirement to provide an approval letter from the manufacturer applies to both seller and installers. Manufacturers responding directly to this Proposal Invitation, in lieu of an authorization letter, shall submit a written explanation that the company is the manufacturer of the product line(s) proposed. Dealer authorization agreements will not be accepted as a substitute for the manufacturer authorization letter.

The manufacturer authorization letters must include the following:
1. Composed on manufacturer letterhead (an email message is not a substitute for the letter),
2. Addressed to “The Local Government Purchasing Cooperative”,
3. Dated within the current calendar year,
4. List the regions in Texas and states that Vendor is authorized to sell, install, and service product(s) proposed, and
5. Name, Title, and Signature of Authorized Official from Manufacturer.

PROPOSAL NOTE 3: **"Pre-Owned/Reconditioned/Retired Rental"** shall be defined as equipment having been checked and inspected by a manufacturer-authorized dealer prior to sale and shall be no older than sixty (60) months as of the date of delivery. Proposers responding to this Proposal Invitation for **"Pre-Owned/Reconditioned/Retired Rental"** equipment must also be approved by the manufacturer to sell pre-owned/reconditioned/retired rental equipment for the brand submitted and must submit an approval letter from each manufacturer with the Proposal. Manufacturer authorization letters must include the regions in which equipment can be sold. Equipment listed as **"Pre-Owned/Reconditioned/Retired Rental"** shall be in good and working condition and shall include a minimum warranty of one-hundred eighty (180) days against any defect from workmanship and parts and shall cover equipment repairs and/or component replacement. Total equipment usage hours as displayed on the service meter will have a maximum of one thousand (1,000) hours per year of age and a minimum of seventy-five percent (75%) of wear remaining for tires, track, and/or ground engagement tools.

Vendors proposing multiple manufacturer product lines and/or catalog/price list per line item must submit the information as follows or proposal may not be considered:

- Select **"Add Alternate"** for each additional manufacturer product line and/or catalog/price list proposed
- Vendor’s must list one specific percentage discount for each manufacturer and/or catalog/price list listed

Item Attributes

1. State Name of Manufacturer Catalog or Product Price list Proposed with Discount Percentage

NOTE: Do not reference SKU, Reference Numbers, Websites, and/or "See Attached/Enclosed".

Case Mini Excavator Price Book

Alternate 1

Section I: New Construction, Road, Bridge and Repair Equipment-PURCHASE ONLY

Discount (%) off catalog/price list for **Mini Excavators, Accessories and Attachments.** Catalog/Price list MUST be included or proposal will not be considered. Asphalt Distributors, Accessories and Attachments.

Total: 10%

Item Attributes

1. State Name of Manufacturer Catalog or Product Price list Proposed with Discount Percentage

NOTE: Do not reference SKU, Reference Numbers, Websites, and/or "See Attached/Enclosed".

Takeuchi Price Book

22

Section I: New Construction, Road, Bridge and Repair Equipment-PURCHASE ONLY

Discount (%) off catalog/price list for **Motor Graders, Accessories and Attachments.** Catalog/Price list MUST be included or proposal will not be considered. Asphalt Distributors, Accessories and Attachments.

Total: 25%

Item Notes: **PROPOSAL NOTE 1:** Vendors shall submit catalog(s)/price list(s) with their Proposal response or the Proposal will not be considered. Vendors shall submit catalog(s)/price list(s) with the Proposal in a readily available and readable electronic format, with Excel or searchable PDF preferred. **No paper catalogs or manufacturer/vendor websites will be accepted.**

PROPOSAL NOTE 2: A Vendor proposing shall be approved and authorized by the manufacturer to sell, install, and service the brand(s) of product(s) proposed. Proposers responding to this Proposal Invitation shall submit an approval letter from each manufacturer for each product line proposed. The requirement to provide an approval letter from the manufacturer applies to both seller and installers. Manufacturers responding directly to this Proposal Invitation, in lieu of an authorization letter, shall submit a written explanation that the company is the manufacturer of the product line(s) proposed. Dealer authorization agreements will not be accepted as a substitute for the manufacturer authorization letter.

The manufacturer authorization letters must include the following:
1. Composed on manufacturer letterhead (an email message is not a substitute for the letter),
2. Addressed to “The Local Government Purchasing Cooperative”,
3. Dated within the current calendar year,
4. List the regions in Texas and states that Vendor is authorized to sell, install, and service product(s) proposed, and
5. Name, Title, and Signature of Authorized Official from Manufacturer.

PROPOSAL NOTE 3: **"Pre-Owned/Reconditioned/Retired Rental"** shall be defined as equipment having been checked and inspected by a manufacturer-authorized dealer prior to sale and shall be no older than sixty (60) months as of the date of delivery. Proposers responding to this Proposal Invitation for **"Pre-Owned/Reconditioned/Retired Rental"** equipment must also be approved by the manufacturer to sell pre-owned/reconditioned/retired rental equipment for the brand submitted and must submit an approval letter from each manufacturer with the Proposal. Manufacturer authorization letters must include the regions in which equipment can be sold. Equipment listed as **"Pre-Owned/Reconditioned/Retired Rental"** shall be in good and working condition and shall include a minimum warranty of one-hundred eighty (180) days against any defect from workmanship and parts and shall cover equipment repairs and/or component replacement. Total equipment usage hours as displayed on the service meter will have a maximum of one thousand (1,000) hours per year of age and a minimum of seventy-five percent (75%) of wear remaining for tires, track, and/or ground engagement tools.

Vendors proposing multiple manufacturer product lines and/or catalog/price list per line item must submit the information as follows or proposal may not be considered:

- Select **"Add Alternate"** for each additional manufacturer product line and/or catalog/price list proposed
- Vendor’s must list one specific percentage discount for each manufacturer and/or catalog/price list listed

Item Attributes

1. State Name of Manufacturer Catalog or Product Price list Proposed with Discount Percentage

NOTE: Do not reference SKU, Reference Numbers, Websites, and/or "See Attached/Enclosed".

Case Grader Price Book

23

Section I: New Construction, Road, Bridge and Repair Equipment-PURCHASE ONLY

Discount (%) off catalog/price list for **Multi Terrain Loaders, Accessories and Attachments.** Catalog/Price list MUST be included or proposal will not be considered. Asphalt Distributors, Accessories and Attachments.

No Bid

Item Notes: **PROPOSAL NOTE 1:** Vendors shall submit catalog(s)/price list(s) with their Proposal response or the Proposal will not be considered. Vendors shall submit catalog(s)/price list(s) with the Proposal in a readily available and readable electronic format, with Excel or searchable PDF preferred. **No paper catalogs or manufacturer/vendor websites will be accepted.**

PROPOSAL NOTE 2: A Vendor proposing shall be approved and authorized by the manufacturer to sell, install, and service the brand(s) of product(s) proposed. Proposers responding to this Proposal Invitation shall submit an approval letter from each manufacturer for each product line proposed. The requirement to provide an approval letter from the manufacturer applies to both seller and installers. Manufacturers responding directly to this Proposal Invitation, in lieu of an authorization letter, shall submit a written explanation that the company is the manufacturer of the product line(s) proposed. Dealer authorization agreements will not be accepted as a substitute for the manufacturer authorization letter.

The manufacturer authorization letters must include the following:
1. Composed on manufacturer letterhead (an email message is not a substitute for the letter),
2. Addressed to “The Local Government Purchasing Cooperative”,
3. Dated within the current calendar year,
4. List the regions in Texas and states that Vendor is authorized to sell, install, and service product(s) proposed, and
5. Name, Title, and Signature of Authorized Official from Manufacturer.

PROPOSAL NOTE 3: **"Pre-Owned/Reconditioned/Retired Rental"** shall be defined as equipment having been checked and inspected by a manufacturer-authorized dealer prior to sale and shall be no older than sixty (60) months as of the date of delivery. Proposers responding to this Proposal Invitation for **"Pre-Owned/Reconditioned/Retired Rental"** equipment must also be approved by the manufacturer to sell pre-owned/reconditioned/retired rental equipment for the brand submitted and must submit an approval letter from each manufacturer with the Proposal. Manufacturer authorization letters must include the regions in which equipment can be sold. Equipment listed as **"Pre-Owned/Reconditioned/Retired Rental"** shall be in good and working condition and shall include a minimum warranty of one-hundred eighty (180) days against any defect from workmanship and parts and shall cover equipment repairs and/or component replacement. Total equipment usage hours as displayed on the service meter will have a maximum of one thousand (1,000) hours per year of age and a minimum of seventy-five percent (75%) of wear remaining for tires, track, and/or ground engagement tools.

Vendors proposing multiple manufacturer product lines and/or catalog/price list per line item must submit the information as follows or proposal may not be considered:

- Select **"Add Alternate"** for each additional manufacturer product line and/or catalog/price list proposed
- Vendor’s must list one specific percentage discount for each manufacturer and/or catalog/price list listed

Item Attributes

1. State Name of Manufacturer Catalog or Product Price list Proposed with Discount Percentage

NOTE: Do not reference SKU, Reference Numbers, Websites, and/or "See Attached/Enclosed".

No response

24

Section I: New Construction, Road, Bridge and Repair Equipment-PURCHASE ONLY

Discount (%) off catalog/price list for **Paving Breakers and Milling Machines, Accessories and Attachments.** Catalog/Price list MUST be included or proposal will not be considered. Asphalt Distributors, Accessories and Attachments.

No Bid

Item Notes: **PROPOSAL NOTE 1:** Vendors shall submit catalog(s)/price list(s) with their Proposal response or the Proposal will not be considered. Vendors shall submit catalog(s)/price list(s) with the Proposal in a readily available and readable electronic format, with Excel or searchable PDF preferred. **No paper catalogs or manufacturer/vendor websites will be accepted.**

PROPOSAL NOTE 2: A Vendor proposing shall be approved and authorized by the manufacturer to sell, install, and service the brand(s) of product(s) proposed. Proposers responding to this Proposal Invitation shall submit an approval letter from each manufacturer for each product line proposed. The requirement to provide an approval letter from the manufacturer applies to both seller and installers. Manufacturers responding directly to this Proposal Invitation, in lieu of an authorization letter, shall submit a written explanation that the company is the manufacturer of the product line(s) proposed. Dealer authorization agreements will not be accepted as a substitute for the manufacturer authorization letter.

The manufacturer authorization letters must include the following:
1. Composed on manufacturer letterhead (an email message is not a substitute for the letter),
2. Addressed to “The Local Government Purchasing Cooperative”,
3. Dated within the current calendar year,
4. List the regions in Texas and states that Vendor is authorized to sell, install, and service product(s) proposed, and
5. Name, Title, and Signature of Authorized Official from Manufacturer.

PROPOSAL NOTE 3: **"Pre-Owned/Reconditioned/Retired Rental"** shall be defined as equipment having been checked and inspected by a manufacturer-authorized dealer prior to sale and shall be no older than sixty (60) months as of the date of delivery. Proposers responding to this Proposal Invitation for **"Pre-Owned/Reconditioned/Retired Rental"** equipment must also be approved by the manufacturer to sell pre-owned/reconditioned/retired rental equipment for the brand submitted and must submit an approval letter from each manufacturer with the Proposal. Manufacturer authorization letters must include the regions in which equipment can be sold. Equipment listed as **"Pre-Owned/Reconditioned/Retired Rental"** shall be in good and working condition and shall include a minimum warranty of one-hundred eighty (180) days against any defect from workmanship and parts and shall cover equipment repairs and/or component replacement. Total equipment usage hours as displayed on the service meter will have a maximum of one thousand (1,000) hours per year of age and a minimum of seventy-five percent (75%) of wear remaining for tires, track, and/or ground engagement tools.

Vendors proposing multiple manufacturer product lines and/or catalog/price list per line item must submit the information as follows or proposal may not be considered:

- Select **"Add Alternate"** for each additional manufacturer product line and/or catalog/price list proposed
- Vendor’s must list one specific percentage discount for each manufacturer and/or catalog/price list listed

Item Attributes

1. State Name of Manufacturer Catalog or Product Price list Proposed with Discount Percentage

NOTE: Do not reference SKU, Reference Numbers, Websites, and/or "See Attached/Enclosed".

No response

25

Section I: New Construction, Road, Bridge and Repair Equipment-PURCHASE ONLY

Discount (%) off catalog/price list for **Pipelaying Equipment, Accessories and Attachments.** Catalog/Price list MUST be included or proposal will not be considered. Asphalt Distributors, Accessories and Attachments.

No Bid

Item Notes: **PROPOSAL NOTE 1:** Vendors shall submit catalog(s)/price list(s) with their Proposal response or the Proposal will not be considered. Vendors shall submit catalog(s)/price list(s) with the Proposal in a readily available and readable electronic format, with Excel or searchable PDF preferred. **No paper catalogs or manufacturer/vendor websites will be accepted.**

PROPOSAL NOTE 2: A Vendor proposing shall be approved and authorized by the manufacturer to sell, install, and service the brand(s) of product(s) proposed. Proposers responding to this Proposal Invitation shall submit an approval letter from each manufacturer for each product line proposed. The requirement to provide an approval letter from the manufacturer applies to both seller and installers. Manufacturers responding directly to this Proposal Invitation, in lieu of an authorization letter, shall submit a written explanation that the company is the manufacturer of the product line(s) proposed. Dealer authorization agreements will not be accepted as a substitute for the manufacturer authorization letter.

The manufacturer authorization letters must include the following:
1. Composed on manufacturer letterhead (an email message is not a substitute for the letter),
2. Addressed to “The Local Government Purchasing Cooperative”,
3. Dated within the current calendar year,
4. List the regions in Texas and states that Vendor is authorized to sell, install, and service product(s) proposed, and
5. Name, Title, and Signature of Authorized Official from Manufacturer.

PROPOSAL NOTE 3: **"Pre-Owned/Reconditioned/Retired Rental"** shall be defined as equipment having been checked and inspected by a manufacturer-authorized dealer prior to sale and shall be no older than sixty (60) months as of the date of delivery. Proposers responding to this Proposal Invitation for **"Pre-Owned/Reconditioned/Retired Rental"** equipment must also be approved by the manufacturer to sell pre-owned/reconditioned/retired rental equipment for the brand submitted and must submit an approval letter from each manufacturer with the Proposal. Manufacturer authorization letters must include the regions in which equipment can be sold. Equipment listed as **"Pre-Owned/Reconditioned/Retired Rental"** shall be in good and working condition and shall include a minimum warranty of one-hundred eighty (180) days against any defect from workmanship and parts and shall cover equipment repairs and/or component replacement. Total equipment usage hours as displayed on the service meter will have a maximum of one thousand (1,000) hours per year of age and a minimum of seventy-five percent (75%) of wear remaining for tires, track, and/or ground engagement tools.

Vendors proposing multiple manufacturer product lines and/or catalog/price list per line item must submit the information as follows or proposal may not be considered:

- Select **"Add Alternate"** for each additional manufacturer product line and/or catalog/price list proposed
- Vendor’s must list one specific percentage discount for each manufacturer and/or catalog/price list listed

Item Attributes

1. State Name of Manufacturer Catalog or Product Price list Proposed with Discount Percentage

NOTE: Do not reference SKU, Reference Numbers, Websites, and/or "See Attached/Enclosed".

No response

26

Section I: New Construction, Road, Bridge and Repair Equipment-PURCHASE ONLY

Discount (%) off catalog/price list for **Pneumatic Compactors and Rollers, Accessories and Attachments.** Catalog/Price list MUST be included or proposal will not be considered. Asphalt Distributors, Accessories and Attachments.

Total: 25%

Item Notes: **PROPOSAL NOTE 1:** Vendors shall submit catalog(s)/price list(s) with their Proposal response or the Proposal will not be considered. Vendors shall submit catalog(s)/price list(s) with the Proposal in a readily available and readable electronic format, with Excel or searchable PDF preferred. **No paper catalogs or manufacturer/vendor websites will be accepted.**

PROPOSAL NOTE 2: A Vendor proposing shall be approved and authorized by the manufacturer to sell, install, and service the brand(s) of product(s) proposed. Proposers responding to this Proposal Invitation shall submit an approval letter from each manufacturer for each product line proposed. The requirement to provide an approval letter from the manufacturer applies to both seller and installers. Manufacturers responding directly to this Proposal Invitation, in lieu of an authorization letter, shall submit a written explanation that the company is the manufacturer of the product line(s) proposed. Dealer authorization agreements will not be accepted as a substitute for the manufacturer authorization letter.

The manufacturer authorization letters must include the following:
1. Composed on manufacturer letterhead (an email message is not a substitute for the letter),
2. Addressed to “The Local Government Purchasing Cooperative”,
3. Dated within the current calendar year,
4. List the regions in Texas and states that Vendor is authorized to sell, install, and service product(s) proposed, and
5. Name, Title, and Signature of Authorized Official from Manufacturer.

PROPOSAL NOTE 3: **"Pre-Owned/Reconditioned/Retired Rental"** shall be defined as equipment having been checked and inspected by a manufacturer-authorized dealer prior to sale and shall be no older than sixty (60) months as of the date of delivery. Proposers responding to this Proposal Invitation for **"Pre-Owned/Reconditioned/Retired Rental"** equipment must also be approved by the manufacturer to sell pre-owned/reconditioned/retired rental equipment for the brand submitted and must submit an approval letter from each manufacturer with the Proposal. Manufacturer authorization letters must include the regions in which equipment can be sold. Equipment listed as **"Pre-Owned/Reconditioned/Retired Rental"** shall be in good and working condition and shall include a minimum warranty of one-hundred eighty (180) days against any defect from workmanship and parts and shall cover equipment repairs and/or component replacement. Total equipment usage hours as displayed on the service meter will have a maximum of one thousand (1,000) hours per year of age and a minimum of seventy-five percent (75%) of wear remaining for tires, track, and/or ground engagement tools.

Vendors proposing multiple manufacturer product lines and/or catalog/price list per line item must submit the information as follows or proposal may not be considered:

- Select **"Add Alternate"** for each additional manufacturer product line and/or catalog/price list proposed
- Vendor’s must list one specific percentage discount for each manufacturer and/or catalog/price list listed

Item Attributes

1. State Name of Manufacturer Catalog or Product Price list Proposed with Discount Percentage

NOTE: Do not reference SKU, Reference Numbers, Websites, and/or "See Attached/Enclosed".

Case Compaction Price Book

27

Section I: New Construction, Road, Bridge and Repair Equipment-PURCHASE ONLY

Discount (%) off catalog/price list for **Pothole Patchers** (Trailer or Truck Mounted)**, Accessories and Attachments.** Catalog/Price list MUST be included or proposal will not be considered. Asphalt Distributors, Accessories and Attachments.

No Bid

Item Notes: **PROPOSAL NOTE 1:** Vendors shall submit catalog(s)/price list(s) with their Proposal response or the Proposal will not be considered. Vendors shall submit catalog(s)/price list(s) with the Proposal in a readily available and readable electronic format, with Excel or searchable PDF preferred. **No paper catalogs or manufacturer/vendor websites will be accepted.**

PROPOSAL NOTE 2: A Vendor proposing shall be approved and authorized by the manufacturer to sell, install, and service the brand(s) of product(s) proposed. Proposers responding to this Proposal Invitation shall submit an approval letter from each manufacturer for each product line proposed. The requirement to provide an approval letter from the manufacturer applies to both seller and installers. Manufacturers responding directly to this Proposal Invitation, in lieu of an authorization letter, shall submit a written explanation that the company is the manufacturer of the product line(s) proposed. Dealer authorization agreements will not be accepted as a substitute for the manufacturer authorization letter.

The manufacturer authorization letters must include the following:
1. Composed on manufacturer letterhead (an email message is not a substitute for the letter),
2. Addressed to “The Local Government Purchasing Cooperative”,
3. Dated within the current calendar year,
4. List the regions in Texas and states that Vendor is authorized to sell, install, and service product(s) proposed, and
5. Name, Title, and Signature of Authorized Official from Manufacturer.

PROPOSAL NOTE 3: **"Pre-Owned/Reconditioned/Retired Rental"** shall be defined as equipment having been checked and inspected by a manufacturer-authorized dealer prior to sale and shall be no older than sixty (60) months as of the date of delivery. Proposers responding to this Proposal Invitation for **"Pre-Owned/Reconditioned/Retired Rental"** equipment must also be approved by the manufacturer to sell pre-owned/reconditioned/retired rental equipment for the brand submitted and must submit an approval letter from each manufacturer with the Proposal. Manufacturer authorization letters must include the regions in which equipment can be sold. Equipment listed as **"Pre-Owned/Reconditioned/Retired Rental"** shall be in good and working condition and shall include a minimum warranty of one-hundred eighty (180) days against any defect from workmanship and parts and shall cover equipment repairs and/or component replacement. Total equipment usage hours as displayed on the service meter will have a maximum of one thousand (1,000) hours per year of age and a minimum of seventy-five percent (75%) of wear remaining for tires, track, and/or ground engagement tools.

Vendors proposing multiple manufacturer product lines and/or catalog/price list per line item must submit the information as follows or proposal may not be considered:

- Select **"Add Alternate"** for each additional manufacturer product line and/or catalog/price list proposed
- Vendor’s must list one specific percentage discount for each manufacturer and/or catalog/price list listed

Item Attributes

1. State Name of Manufacturer Catalog or Product Price list Proposed with Discount Percentage

NOTE: Do not reference SKU, Reference Numbers, Websites, and/or "See Attached/Enclosed".

No response

28

Section I: New Construction, Road, Bridge and Repair Equipment-PURCHASE ONLY

Discount (%) off catalog/price list for **Road Broom Equipment, Accessories and Attachments.** Catalog/Price list MUST be included or proposal will not be considered. Asphalt Distributors, Accessories and Attachments.

Total: 10%

Item Notes: **PROPOSAL NOTE 1:** Vendors shall submit catalog(s)/price list(s) with their Proposal response or the Proposal will not be considered. Vendors shall submit catalog(s)/price list(s) with the Proposal in a readily available and readable electronic format, with Excel or searchable PDF preferred. **No paper catalogs or manufacturer/vendor websites will be accepted.**

PROPOSAL NOTE 2: A Vendor proposing shall be approved and authorized by the manufacturer to sell, install, and service the brand(s) of product(s) proposed. Proposers responding to this Proposal Invitation shall submit an approval letter from each manufacturer for each product line proposed. The requirement to provide an approval letter from the manufacturer applies to both seller and installers. Manufacturers responding directly to this Proposal Invitation, in lieu of an authorization letter, shall submit a written explanation that the company is the manufacturer of the product line(s) proposed. Dealer authorization agreements will not be accepted as a substitute for the manufacturer authorization letter.

The manufacturer authorization letters must include the following:
1. Composed on manufacturer letterhead (an email message is not a substitute for the letter),
2. Addressed to “The Local Government Purchasing Cooperative”,
3. Dated within the current calendar year,
4. List the regions in Texas and states that Vendor is authorized to sell, install, and service product(s) proposed, and
5. Name, Title, and Signature of Authorized Official from Manufacturer.

PROPOSAL NOTE 3: **"Pre-Owned/Reconditioned/Retired Rental"** shall be defined as equipment having been checked and inspected by a manufacturer-authorized dealer prior to sale and shall be no older than sixty (60) months as of the date of delivery. Proposers responding to this Proposal Invitation for **"Pre-Owned/Reconditioned/Retired Rental"** equipment must also be approved by the manufacturer to sell pre-owned/reconditioned/retired rental equipment for the brand submitted and must submit an approval letter from each manufacturer with the Proposal. Manufacturer authorization letters must include the regions in which equipment can be sold. Equipment listed as **"Pre-Owned/Reconditioned/Retired Rental"** shall be in good and working condition and shall include a minimum warranty of one-hundred eighty (180) days against any defect from workmanship and parts and shall cover equipment repairs and/or component replacement. Total equipment usage hours as displayed on the service meter will have a maximum of one thousand (1,000) hours per year of age and a minimum of seventy-five percent (75%) of wear remaining for tires, track, and/or ground engagement tools.

Vendors proposing multiple manufacturer product lines and/or catalog/price list per line item must submit the information as follows or proposal may not be considered:

- Select **"Add Alternate"** for each additional manufacturer product line and/or catalog/price list proposed
- Vendor’s must list one specific percentage discount for each manufacturer and/or catalog/price list listed

Item Attributes

1. State Name of Manufacturer Catalog or Product Price list Proposed with Discount Percentage

NOTE: Do not reference SKU, Reference Numbers, Websites, and/or "See Attached/Enclosed".

Broce Price List

29

Section I: New Construction, Road, Bridge and Repair Equipment-PURCHASE ONLY

Discount (%) off catalog/price list for **Road Reclaiming Equipment, Accessories and Attachments.** Catalog/Price list MUST be included or proposal will not be considered. Asphalt Distributors, Accessories and Attachments.

No Bid

Item Notes: **PROPOSAL NOTE 1:** Vendors shall submit catalog(s)/price list(s) with their Proposal response or the Proposal will not be considered. Vendors shall submit catalog(s)/price list(s) with the Proposal in a readily available and readable electronic format, with Excel or searchable PDF preferred. **No paper catalogs or manufacturer/vendor websites will be accepted.**

PROPOSAL NOTE 2: A Vendor proposing shall be approved and authorized by the manufacturer to sell, install, and service the brand(s) of product(s) proposed. Proposers responding to this Proposal Invitation shall submit an approval letter from each manufacturer for each product line proposed. The requirement to provide an approval letter from the manufacturer applies to both seller and installers. Manufacturers responding directly to this Proposal Invitation, in lieu of an authorization letter, shall submit a written explanation that the company is the manufacturer of the product line(s) proposed. Dealer authorization agreements will not be accepted as a substitute for the manufacturer authorization letter.

The manufacturer authorization letters must include the following:
1. Composed on manufacturer letterhead (an email message is not a substitute for the letter),
2. Addressed to “The Local Government Purchasing Cooperative”,
3. Dated within the current calendar year,
4. List the regions in Texas and states that Vendor is authorized to sell, install, and service product(s) proposed, and
5. Name, Title, and Signature of Authorized Official from Manufacturer.

PROPOSAL NOTE 3: **"Pre-Owned/Reconditioned/Retired Rental"** shall be defined as equipment having been checked and inspected by a manufacturer-authorized dealer prior to sale and shall be no older than sixty (60) months as of the date of delivery. Proposers responding to this Proposal Invitation for **"Pre-Owned/Reconditioned/Retired Rental"** equipment must also be approved by the manufacturer to sell pre-owned/reconditioned/retired rental equipment for the brand submitted and must submit an approval letter from each manufacturer with the Proposal. Manufacturer authorization letters must include the regions in which equipment can be sold. Equipment listed as **"Pre-Owned/Reconditioned/Retired Rental"** shall be in good and working condition and shall include a minimum warranty of one-hundred eighty (180) days against any defect from workmanship and parts and shall cover equipment repairs and/or component replacement. Total equipment usage hours as displayed on the service meter will have a maximum of one thousand (1,000) hours per year of age and a minimum of seventy-five percent (75%) of wear remaining for tires, track, and/or ground engagement tools.

Vendors proposing multiple manufacturer product lines and/or catalog/price list per line item must submit the information as follows or proposal may not be considered:

- Select **"Add Alternate"** for each additional manufacturer product line and/or catalog/price list proposed
- Vendor’s must list one specific percentage discount for each manufacturer and/or catalog/price list listed

Item Attributes

1. State Name of Manufacturer Catalog or Product Price list Proposed with Discount Percentage

NOTE: Do not reference SKU, Reference Numbers, Websites, and/or "See Attached/Enclosed".

No response

30

Section I: New Construction, Road, Bridge and Repair Equipment-PURCHASE ONLY

Discount (%) off catalog/price list for **Scrapers, Accessories and Attachments.** Catalog/Price list MUST be included or proposal will not be considered. Asphalt Distributors, Accessories and Attachments.

No Bid

Item Notes: **PROPOSAL NOTE 1:** Vendors shall submit catalog(s)/price list(s) with their Proposal response or the Proposal will not be considered. Vendors shall submit catalog(s)/price list(s) with the Proposal in a readily available and readable electronic format, with Excel or searchable PDF preferred. **No paper catalogs or manufacturer/vendor websites will be accepted.**

PROPOSAL NOTE 2: A Vendor proposing shall be approved and authorized by the manufacturer to sell, install, and service the brand(s) of product(s) proposed. Proposers responding to this Proposal Invitation shall submit an approval letter from each manufacturer for each product line proposed. The requirement to provide an approval letter from the manufacturer applies to both seller and installers. Manufacturers responding directly to this Proposal Invitation, in lieu of an authorization letter, shall submit a written explanation that the company is the manufacturer of the product line(s) proposed. Dealer authorization agreements will not be accepted as a substitute for the manufacturer authorization letter.

The manufacturer authorization letters must include the following:
1. Composed on manufacturer letterhead (an email message is not a substitute for the letter),
2. Addressed to “The Local Government Purchasing Cooperative”,
3. Dated within the current calendar year,
4. List the regions in Texas and states that Vendor is authorized to sell, install, and service product(s) proposed, and
5. Name, Title, and Signature of Authorized Official from Manufacturer.

PROPOSAL NOTE 3: **"Pre-Owned/Reconditioned/Retired Rental"** shall be defined as equipment having been checked and inspected by a manufacturer-authorized dealer prior to sale and shall be no older than sixty (60) months as of the date of delivery. Proposers responding to this Proposal Invitation for **"Pre-Owned/Reconditioned/Retired Rental"** equipment must also be approved by the manufacturer to sell pre-owned/reconditioned/retired rental equipment for the brand submitted and must submit an approval letter from each manufacturer with the Proposal. Manufacturer authorization letters must include the regions in which equipment can be sold. Equipment listed as **"Pre-Owned/Reconditioned/Retired Rental"** shall be in good and working condition and shall include a minimum warranty of one-hundred eighty (180) days against any defect from workmanship and parts and shall cover equipment repairs and/or component replacement. Total equipment usage hours as displayed on the service meter will have a maximum of one thousand (1,000) hours per year of age and a minimum of seventy-five percent (75%) of wear remaining for tires, track, and/or ground engagement tools.

Vendors proposing multiple manufacturer product lines and/or catalog/price list per line item must submit the information as follows or proposal may not be considered:

- Select **"Add Alternate"** for each additional manufacturer product line and/or catalog/price list proposed
- Vendor’s must list one specific percentage discount for each manufacturer and/or catalog/price list listed

Item Attributes

1. State Name of Manufacturer Catalog or Product Price list Proposed with Discount Percentage

NOTE: Do not reference SKU, Reference Numbers, Websites, and/or "See Attached/Enclosed".

No response

31

Section I: New Construction, Road, Bridge and Repair Equipment-PURCHASE ONLY

Discount (%) off catalog/price list for **Skid Steer Loaders, Accessories and Attachments.** Catalog/Price list MUST be included or proposal will not be considered. Asphalt Distributors, Accessories and Attachments.

Total: 25%

Item Notes: **PROPOSAL NOTE 1:** Vendors shall submit catalog(s)/price list(s) with their Proposal response or the Proposal will not be considered. Vendors shall submit catalog(s)/price list(s) with the Proposal in a readily available and readable electronic format, with Excel or searchable PDF preferred. **No paper catalogs or manufacturer/vendor websites will be accepted.**

PROPOSAL NOTE 2: A Vendor proposing shall be approved and authorized by the manufacturer to sell, install, and service the brand(s) of product(s) proposed. Proposers responding to this Proposal Invitation shall submit an approval letter from each manufacturer for each product line proposed. The requirement to provide an approval letter from the manufacturer applies to both seller and installers. Manufacturers responding directly to this Proposal Invitation, in lieu of an authorization letter, shall submit a written explanation that the company is the manufacturer of the product line(s) proposed. Dealer authorization agreements will not be accepted as a substitute for the manufacturer authorization letter.

The manufacturer authorization letters must include the following:
1. Composed on manufacturer letterhead (an email message is not a substitute for the letter),
2. Addressed to “The Local Government Purchasing Cooperative”,
3. Dated within the current calendar year,
4. List the regions in Texas and states that Vendor is authorized to sell, install, and service product(s) proposed, and
5. Name, Title, and Signature of Authorized Official from Manufacturer.

PROPOSAL NOTE 3: **"Pre-Owned/Reconditioned/Retired Rental"** shall be defined as equipment having been checked and inspected by a manufacturer-authorized dealer prior to sale and shall be no older than sixty (60) months as of the date of delivery. Proposers responding to this Proposal Invitation for **"Pre-Owned/Reconditioned/Retired Rental"** equipment must also be approved by the manufacturer to sell pre-owned/reconditioned/retired rental equipment for the brand submitted and must submit an approval letter from each manufacturer with the Proposal. Manufacturer authorization letters must include the regions in which equipment can be sold. Equipment listed as **"Pre-Owned/Reconditioned/Retired Rental"** shall be in good and working condition and shall include a minimum warranty of one-hundred eighty (180) days against any defect from workmanship and parts and shall cover equipment repairs and/or component replacement. Total equipment usage hours as displayed on the service meter will have a maximum of one thousand (1,000) hours per year of age and a minimum of seventy-five percent (75%) of wear remaining for tires, track, and/or ground engagement tools.

Vendors proposing multiple manufacturer product lines and/or catalog/price list per line item must submit the information as follows or proposal may not be considered:

- Select **"Add Alternate"** for each additional manufacturer product line and/or catalog/price list proposed
- Vendor’s must list one specific percentage discount for each manufacturer and/or catalog/price list listed

Item Attributes

1. State Name of Manufacturer Catalog or Product Price list Proposed with Discount Percentage

NOTE: Do not reference SKU, Reference Numbers, Websites, and/or "See Attached/Enclosed".

Case SSL Price Book

Alternate 1

Section I: New Construction, Road, Bridge and Repair Equipment-PURCHASE ONLY

Discount (%) off catalog/price list for **Skid Steer Loaders, Accessories and Attachments.** Catalog/Price list MUST be included or proposal will not be considered. Asphalt Distributors, Accessories and Attachments.

Total: 10%

Item Attributes

1. State Name of Manufacturer Catalog or Product Price list Proposed with Discount Percentage

NOTE: Do not reference SKU, Reference Numbers, Websites, and/or "See Attached/Enclosed".

Takeuchi Price Book

32

Section I: New Construction, Road, Bridge and Repair Equipment-PURCHASE ONLY

Discount (%) off catalog/price list for **Soil Stabilizing Equipment, Accessories and Attachments.** Catalog/Price list MUST be included or proposal will not be considered. Asphalt Distributors, Accessories and Attachments.

No Bid

Item Notes: **PROPOSAL NOTE 1:** Vendors shall submit catalog(s)/price list(s) with their Proposal response or the Proposal will not be considered. Vendors shall submit catalog(s)/price list(s) with the Proposal in a readily available and readable electronic format, with Excel or searchable PDF preferred. **No paper catalogs or manufacturer/vendor websites will be accepted.**

PROPOSAL NOTE 2: A Vendor proposing shall be approved and authorized by the manufacturer to sell, install, and service the brand(s) of product(s) proposed. Proposers responding to this Proposal Invitation shall submit an approval letter from each manufacturer for each product line proposed. The requirement to provide an approval letter from the manufacturer applies to both seller and installers. Manufacturers responding directly to this Proposal Invitation, in lieu of an authorization letter, shall submit a written explanation that the company is the manufacturer of the product line(s) proposed. Dealer authorization agreements will not be accepted as a substitute for the manufacturer authorization letter.

The manufacturer authorization letters must include the following:
1. Composed on manufacturer letterhead (an email message is not a substitute for the letter),
2. Addressed to “The Local Government Purchasing Cooperative”,
3. Dated within the current calendar year,
4. List the regions in Texas and states that Vendor is authorized to sell, install, and service product(s) proposed, and
5. Name, Title, and Signature of Authorized Official from Manufacturer.

PROPOSAL NOTE 3: **"Pre-Owned/Reconditioned/Retired Rental"** shall be defined as equipment having been checked and inspected by a manufacturer-authorized dealer prior to sale and shall be no older than sixty (60) months as of the date of delivery. Proposers responding to this Proposal Invitation for **"Pre-Owned/Reconditioned/Retired Rental"** equipment must also be approved by the manufacturer to sell pre-owned/reconditioned/retired rental equipment for the brand submitted and must submit an approval letter from each manufacturer with the Proposal. Manufacturer authorization letters must include the regions in which equipment can be sold. Equipment listed as **"Pre-Owned/Reconditioned/Retired Rental"** shall be in good and working condition and shall include a minimum warranty of one-hundred eighty (180) days against any defect from workmanship and parts and shall cover equipment repairs and/or component replacement. Total equipment usage hours as displayed on the service meter will have a maximum of one thousand (1,000) hours per year of age and a minimum of seventy-five percent (75%) of wear remaining for tires, track, and/or ground engagement tools.

Vendors proposing multiple manufacturer product lines and/or catalog/price list per line item must submit the information as follows or proposal may not be considered:

- Select **"Add Alternate"** for each additional manufacturer product line and/or catalog/price list proposed
- Vendor’s must list one specific percentage discount for each manufacturer and/or catalog/price list listed

Item Attributes

1. State Name of Manufacturer Catalog or Product Price list Proposed with Discount Percentage

NOTE: Do not reference SKU, Reference Numbers, Websites, and/or "See Attached/Enclosed".

No response

33

Section I: New Construction, Road, Bridge and Repair Equipment-PURCHASE ONLY

Discount (%) off catalog/price list for **Telescopic Handlers, Accessories and Attachments.** Catalog/Price list MUST be included or proposal will not be considered. Asphalt Distributors, Accessories and Attachments.

Total: 15%

Item Notes: **PROPOSAL NOTE 1:** Vendors shall submit catalog(s)/price list(s) with their Proposal response or the Proposal will not be considered. Vendors shall submit catalog(s)/price list(s) with the Proposal in a readily available and readable electronic format, with Excel or searchable PDF preferred. **No paper catalogs or manufacturer/vendor websites will be accepted.**

PROPOSAL NOTE 2: A Vendor proposing shall be approved and authorized by the manufacturer to sell, install, and service the brand(s) of product(s) proposed. Proposers responding to this Proposal Invitation shall submit an approval letter from each manufacturer for each product line proposed. The requirement to provide an approval letter from the manufacturer applies to both seller and installers. Manufacturers responding directly to this Proposal Invitation, in lieu of an authorization letter, shall submit a written explanation that the company is the manufacturer of the product line(s) proposed. Dealer authorization agreements will not be accepted as a substitute for the manufacturer authorization letter.

The manufacturer authorization letters must include the following:
1. Composed on manufacturer letterhead (an email message is not a substitute for the letter),
2. Addressed to “The Local Government Purchasing Cooperative”,
3. Dated within the current calendar year,
4. List the regions in Texas and states that Vendor is authorized to sell, install, and service product(s) proposed, and
5. Name, Title, and Signature of Authorized Official from Manufacturer.

PROPOSAL NOTE 3: **"Pre-Owned/Reconditioned/Retired Rental"** shall be defined as equipment having been checked and inspected by a manufacturer-authorized dealer prior to sale and shall be no older than sixty (60) months as of the date of delivery. Proposers responding to this Proposal Invitation for **"Pre-Owned/Reconditioned/Retired Rental"** equipment must also be approved by the manufacturer to sell pre-owned/reconditioned/retired rental equipment for the brand submitted and must submit an approval letter from each manufacturer with the Proposal. Manufacturer authorization letters must include the regions in which equipment can be sold. Equipment listed as **"Pre-Owned/Reconditioned/Retired Rental"** shall be in good and working condition and shall include a minimum warranty of one-hundred eighty (180) days against any defect from workmanship and parts and shall cover equipment repairs and/or component replacement. Total equipment usage hours as displayed on the service meter will have a maximum of one thousand (1,000) hours per year of age and a minimum of seventy-five percent (75%) of wear remaining for tires, track, and/or ground engagement tools.

Vendors proposing multiple manufacturer product lines and/or catalog/price list per line item must submit the information as follows or proposal may not be considered:

- Select **"Add Alternate"** for each additional manufacturer product line and/or catalog/price list proposed
- Vendor’s must list one specific percentage discount for each manufacturer and/or catalog/price list listed

Item Attributes

1. State Name of Manufacturer Catalog or Product Price list Proposed with Discount Percentage

NOTE: Do not reference SKU, Reference Numbers, Websites, and/or "See Attached/Enclosed".

Skyjack Price Book

34

Section I: New Construction, Road, Bridge and Repair Equipment-PURCHASE ONLY

Discount (%) off catalog/price list for **Track Loaders, Accessories and Attachments.** Catalog/Price list MUST be included or proposal will not be considered. Asphalt Distributors, Accessories and Attachments.

Total: 25%

Item Notes: **PROPOSAL NOTE 1:** Vendors shall submit catalog(s)/price list(s) with their Proposal response or the Proposal will not be considered. Vendors shall submit catalog(s)/price list(s) with the Proposal in a readily available and readable electronic format, with Excel or searchable PDF preferred. **No paper catalogs or manufacturer/vendor websites will be accepted.**

PROPOSAL NOTE 2: A Vendor proposing shall be approved and authorized by the manufacturer to sell, install, and service the brand(s) of product(s) proposed. Proposers responding to this Proposal Invitation shall submit an approval letter from each manufacturer for each product line proposed. The requirement to provide an approval letter from the manufacturer applies to both seller and installers. Manufacturers responding directly to this Proposal Invitation, in lieu of an authorization letter, shall submit a written explanation that the company is the manufacturer of the product line(s) proposed. Dealer authorization agreements will not be accepted as a substitute for the manufacturer authorization letter.

The manufacturer authorization letters must include the following:
1. Composed on manufacturer letterhead (an email message is not a substitute for the letter),
2. Addressed to “The Local Government Purchasing Cooperative”,
3. Dated within the current calendar year,
4. List the regions in Texas and states that Vendor is authorized to sell, install, and service product(s) proposed, and
5. Name, Title, and Signature of Authorized Official from Manufacturer.

PROPOSAL NOTE 3: **"Pre-Owned/Reconditioned/Retired Rental"** shall be defined as equipment having been checked and inspected by a manufacturer-authorized dealer prior to sale and shall be no older than sixty (60) months as of the date of delivery. Proposers responding to this Proposal Invitation for **"Pre-Owned/Reconditioned/Retired Rental"** equipment must also be approved by the manufacturer to sell pre-owned/reconditioned/retired rental equipment for the brand submitted and must submit an approval letter from each manufacturer with the Proposal. Manufacturer authorization letters must include the regions in which equipment can be sold. Equipment listed as **"Pre-Owned/Reconditioned/Retired Rental"** shall be in good and working condition and shall include a minimum warranty of one-hundred eighty (180) days against any defect from workmanship and parts and shall cover equipment repairs and/or component replacement. Total equipment usage hours as displayed on the service meter will have a maximum of one thousand (1,000) hours per year of age and a minimum of seventy-five percent (75%) of wear remaining for tires, track, and/or ground engagement tools.

Vendors proposing multiple manufacturer product lines and/or catalog/price list per line item must submit the information as follows or proposal may not be considered:

- Select **"Add Alternate"** for each additional manufacturer product line and/or catalog/price list proposed
- Vendor’s must list one specific percentage discount for each manufacturer and/or catalog/price list listed

Item Attributes

1. State Name of Manufacturer Catalog or Product Price list Proposed with Discount Percentage

NOTE: Do not reference SKU, Reference Numbers, Websites, and/or "See Attached/Enclosed".

Case CTL Price Book

Alternate 1

Section I: New Construction, Road, Bridge and Repair Equipment-PURCHASE ONLY

Discount (%) off catalog/price list for **Track Loaders, Accessories and Attachments.** Catalog/Price list MUST be included or proposal will not be considered. Asphalt Distributors, Accessories and Attachments.

Total: 10%

Item Attributes

1. State Name of Manufacturer Catalog or Product Price list Proposed with Discount Percentage

NOTE: Do not reference SKU, Reference Numbers, Websites, and/or "See Attached/Enclosed".

Takeuchi Price Book

35

Section I: New Construction, Road, Bridge and Repair Equipment-PURCHASE ONLY

Discount (%) off catalog/price list for **Track and Wheel Material Handlers, Accessories and Attachments.** Catalog/Price list MUST be included or proposal will not be considered. Asphalt Distributors, Accessories and Attachments.

Total: 35%

Item Notes: **PROPOSAL NOTE 1:** Vendors shall submit catalog(s)/price list(s) with their Proposal response or the Proposal will not be considered. Vendors shall submit catalog(s)/price list(s) with the Proposal in a readily available and readable electronic format, with Excel or searchable PDF preferred. **No paper catalogs or manufacturer/vendor websites will be accepted.**

PROPOSAL NOTE 2: A Vendor proposing shall be approved and authorized by the manufacturer to sell, install, and service the brand(s) of product(s) proposed. Proposers responding to this Proposal Invitation shall submit an approval letter from each manufacturer for each product line proposed. The requirement to provide an approval letter from the manufacturer applies to both seller and installers. Manufacturers responding directly to this Proposal Invitation, in lieu of an authorization letter, shall submit a written explanation that the company is the manufacturer of the product line(s) proposed. Dealer authorization agreements will not be accepted as a substitute for the manufacturer authorization letter.

The manufacturer authorization letters must include the following:

1. Composed on manufacturer letterhead (an email message is not a substitute for the letter),
2. Addressed to “The Local Government Purchasing Cooperative”,
3. Dated within the current calendar year,
4. List the regions in Texas and states that Vendor is authorized to sell, install, and service product(s) proposed, and
5. Name, Title, and Signature of Authorized Official from Manufacturer.

PROPOSAL NOTE 3: **"Pre-Owned/Reconditioned/Retired Rental"** shall be defined as equipment having been checked and inspected by a manufacturer-authorized dealer prior to sale and shall be no older than sixty (60) months as of the date of delivery. Proposers responding to this Proposal Invitation for **"Pre-Owned/Reconditioned/Retired Rental"** equipment must also be approved by the manufacturer to sell pre-owned/reconditioned/retired rental equipment for the brand submitted and must submit an approval letter from each manufacturer with the Proposal. Manufacturer authorization letters must include the regions in which equipment can be sold. Equipment listed as **"Pre-Owned/Reconditioned/Retired Rental"** shall be in good and working condition and shall include a minimum warranty of one-hundred eighty (180) days against any defect from workmanship and parts and shall cover equipment repairs and/or component replacement. Total equipment usage hours as displayed on the service meter will have a maximum of one thousand (1,000) hours per year of age and a minimum of seventy-five percent (75%) of wear remaining for tires, track, and/or ground engagement tools.

Vendors proposing multiple manufacturer product lines and/or catalog/price list per line item must submit the information as follows or proposal may not be considered:

- Select **"Add Alternate"** for each additional manufacturer product line and/or catalog/price list proposed
- Vendor’s must list one specific percentage discount for each manufacturer and/or catalog/price list listed

Item Attributes

1. State Name of Manufacturer Catalog or Product Price list Proposed with Discount Percentage

NOTE: Do not reference SKU, Reference Numbers, Websites, and/or "See Attached/Enclosed".

Hyundai Price List

Alternate 1

Section I: New Construction, Road, Bridge and Repair Equipment-PURCHASE ONLY
Discount (%) off catalog/price list for **Track and Wheel Material Handlers, Accessories and Attachments.** Catalog/Price list MUST be included or proposal will not be considered. Asphalt Distributors, Accessories and Attachments.

Total: 20%

Item Attributes

1. State Name of Manufacturer Catalog or Product Price list Proposed with Discount Percentage

NOTE: Do not reference SKU, Reference Numbers, Websites, and/or "See Attached/Enclosed".

Linkbelt Price List

36

Section I: New Construction, Road, Bridge and Repair Equipment-PURCHASE ONLY

Discount (%) off catalog/price list for **Track-Type Tractors and Dozers, Accessories and Attachments.** Catalog/Price list MUST be included or proposal will not be considered. Asphalt Distributors, Accessories and Attachments.

Total: 25%

Item Notes: **PROPOSAL NOTE 1:** Vendors shall submit catalog(s)/price list(s) with their Proposal response or the Proposal will not be considered. Vendors shall submit catalog(s)/price list(s) with the Proposal in a readily available and readable electronic format, with Excel or searchable PDF preferred. **No paper catalogs or manufacturer/vendor websites will be accepted.**

PROPOSAL NOTE 2: A Vendor proposing shall be approved and authorized by the manufacturer to sell, install, and service the brand(s) of product(s) proposed. Proposers responding to this Proposal Invitation shall submit an approval letter from each manufacturer for each product line proposed. The requirement to provide an approval letter from the manufacturer applies to both seller and installers. Manufacturers responding directly to this Proposal Invitation, in lieu of an authorization letter, shall submit a written explanation that the company is the manufacturer of the product line(s) proposed. Dealer authorization agreements will not be accepted as a substitute for the manufacturer authorization letter.

The manufacturer authorization letters must include the following:

1. Composed on manufacturer letterhead (an email message is not a substitute for the letter),
2. Addressed to “The Local Government Purchasing Cooperative”,
3. Dated within the current calendar year,
4. List the regions in Texas and states that Vendor is authorized to sell, install, and service product(s) proposed, and
5. Name, Title, and Signature of Authorized Official from Manufacturer.

PROPOSAL NOTE 3: **"Pre-Owned/Reconditioned/Retired Rental"** shall be defined as equipment having been checked and inspected by a manufacturer-authorized dealer prior to sale and shall be no older than sixty (60) months as of the date of delivery. Proposers responding to this Proposal Invitation for **"Pre-Owned/Reconditioned/Retired Rental"** equipment must also be approved by the manufacturer to sell pre-owned/reconditioned/retired rental equipment for the brand submitted and must submit an approval letter from each manufacturer with the Proposal. Manufacturer authorization letters must include the regions in which equipment can be sold. Equipment listed as **"Pre-Owned/Reconditioned/Retired Rental"** shall be in good and working condition and shall include a minimum warranty of one-hundred eighty (180) days against any defect from workmanship and parts and shall cover equipment repairs and/or component replacement. Total equipment usage hours as displayed on the service meter will have a maximum of one thousand (1,000) hours per year of age and a minimum of seventy-five percent (75%) of wear remaining for tires, track, and/or ground engagement tools.

Vendors proposing multiple manufacturer product lines and/or catalog/price list per line item must submit the information as follows or proposal may not be considered:

- Select **"Add Alternate"** for each additional manufacturer product line and/or catalog/price list proposed
- Vendor’s must list one specific percentage discount for each manufacturer and/or catalog/price list listed

Item Attributes

1. State Name of Manufacturer Catalog or Product Price list Proposed with Discount Percentage

NOTE: Do not reference SKU, Reference Numbers, Websites, and/or "See Attached/Enclosed".

Case Dozer Price Book

Alternate 1

Section I: New Construction, Road, Bridge and Repair Equipment-PURCHASE ONLY

Discount (%) off catalog/price list for **Track-Type Tractors and Dozers, Accessories and Attachments.** Catalog/Price list MUST be included or proposal will not be considered. Asphalt Distributors, Accessories and Attachments.

Total: 25%

Item Attributes

1. State Name of Manufacturer Catalog or Product Price list Proposed with Discount Percentage

NOTE: Do not reference SKU, Reference Numbers, Websites, and/or "See Attached/Enclosed".

Case UT Dozer Price Book

37

Section I: New Construction, Road, Bridge and Repair Equipment-PURCHASE ONLY

Discount (%) off catalog/price list for **Tracked Excavators, Accessories and Attachments.** Catalog/Price list MUST be included or proposal will not be considered. Asphalt Distributors, Accessories and Attachments.

Total: 25%

Item Notes: **PROPOSAL NOTE 1:** Vendors shall submit catalog(s)/price list(s) with their Proposal response or the Proposal will not be considered. Vendors shall submit catalog(s)/price list(s) with the Proposal in a readily available and readable electronic format, with Excel or searchable PDF preferred. **No paper catalogs or manufacturer/vendor websites will be accepted.**

PROPOSAL NOTE 2: A Vendor proposing shall be approved and authorized by the manufacturer to sell, install, and service the brand(s) of product(s) proposed. Proposers responding to this Proposal Invitation shall submit an approval letter from each manufacturer for each product line proposed. The requirement to provide an approval letter from the manufacturer applies to both seller and installers. Manufacturers responding directly to this Proposal Invitation, in lieu of an authorization letter, shall submit a written explanation that the company is the manufacturer of the product line(s) proposed. Dealer authorization agreements will not be accepted as a substitute for the manufacturer authorization letter.

The manufacturer authorization letters must include the following:
1. Composed on manufacturer letterhead (an email message is not a substitute for the letter),
2. Addressed to “The Local Government Purchasing Cooperative”,
3. Dated within the current calendar year,
4. List the regions in Texas and states that Vendor is authorized to sell, install, and service product(s) proposed, and
5. Name, Title, and Signature of Authorized Official from Manufacturer.

PROPOSAL NOTE 3: **"Pre-Owned/Reconditioned/Retired Rental"** shall be defined as equipment having been checked and inspected by a manufacturer-authorized dealer prior to sale and shall be no older than sixty (60) months as of the date of delivery. Proposers responding to this Proposal Invitation for **"Pre-Owned/Reconditioned/Retired Rental"** equipment must also be approved by the manufacturer to sell pre-owned/reconditioned/retired rental equipment for the brand submitted and must submit an approval letter from each manufacturer with the Proposal. Manufacturer authorization letters must include the regions in which equipment can be sold. Equipment listed as **"Pre-Owned/Reconditioned/Retired Rental"** shall be in good and working condition and shall include a minimum warranty of one-hundred eighty (180) days against any defect from workmanship and parts and shall cover equipment repairs and/or component replacement. Total equipment usage hours as displayed on the service meter will have a maximum of one thousand (1,000) hours per year of age and a minimum of seventy-five percent (75%) of wear remaining for tires, track, and/or ground engagement tools.

Vendors proposing multiple manufacturer product lines and/or catalog/price list per line item must submit the information as follows or proposal may not be considered:

- Select **"Add Alternate"** for each additional manufacturer product line and/or catalog/price list proposed
- Vendor’s must list one specific percentage discount for each manufacturer and/or catalog/price list listed

Item Attributes

1. State Name of Manufacturer Catalog or Product Price list Proposed with Discount Percentage

NOTE: Do not reference SKU, Reference Numbers, Websites, and/or "See Attached/Enclosed".

Case Excavator Price Book

Alternate 1

Section I: New Construction, Road, Bridge and Repair Equipment-PURCHASE ONLY
Discount (%) off catalog/price list for **Tracked Excavators, Accessories and Attachments.** Catalog/Price list MUST be included or proposal will not be considered. Asphalt Distributors, Accessories and Attachments.

Total: 25%

Item Attributes

1. State Name of Manufacturer Catalog or Product Price list Proposed with Discount Percentage

NOTE: Do not reference SKU, Reference Numbers, Websites, and/or "See Attached/Enclosed".

Case Midi Excavator Price Book

Alternate 2

Section I: New Construction, Road, Bridge and Repair Equipment-PURCHASE ONLY
Discount (%) off catalog/price list for **Tracked Excavators, Accessories and Attachments.** Catalog/Price list MUST be included or proposal will not be considered. Asphalt Distributors, Accessories and Attachments.

Total: 25%

Item Attributes

1. State Name of Manufacturer Catalog or Product Price list Proposed with Discount Percentage

NOTE: Do not reference SKU, Reference Numbers, Websites, and/or "See Attached/Enclosed".

Case Mini Excavator Price Book

Alternate 3

Section I: New Construction, Road, Bridge and Repair Equipment-PURCHASE ONLY
Discount (%) off catalog/price list for **Tracked Excavators, Accessories and Attachments.** Catalog/Price list MUST be included or proposal will not be considered. Asphalt Distributors, Accessories and Attachments.

Total: 35%

Item Attributes

1. State Name of Manufacturer Catalog or Product Price list Proposed with Discount Percentage

NOTE: Do not reference SKU, Reference Numbers, Websites, and/or "See Attached/Enclosed".

Hyundai Price List

Alternate 4

Section I: New Construction, Road, Bridge and Repair Equipment-PURCHASE ONLY
Discount (%) off catalog/price list for **Tracked Excavators, Accessories and Attachments.** Catalog/Price list MUST be included or proposal will not be considered. Asphalt Distributors, Accessories and Attachments.

Total: 20%

Item Attributes

1. State Name of Manufacturer Catalog or Product Price list Proposed with Discount Percentage

NOTE: Do not reference SKU, Reference Numbers, Websites, and/or "See Attached/Enclosed".

Linkbelt Price List

Alternate 5

Section I: New Construction, Road, Bridge and Repair Equipment-PURCHASE ONLY

Discount (%) off catalog/price list for **Tracked Excavators, Accessories and Attachments.** Catalog/Price list MUST be included or proposal will not be considered. Asphalt Distributors, Accessories and Attachments.

Total: 10%

Item Attributes

1. State Name of Manufacturer Catalog or Product Price list Proposed with Discount Percentage

NOTE: Do not reference SKU, Reference Numbers, Websites, and/or "See Attached/Enclosed".

Takeuchi Price Book

38

Section I: New Construction, Road, Bridge and Repair Equipment-PURCHASE ONLY

Discount (%) off catalog/price list for **Trommel Screen Equipment and Compost Turners, Accessories and Attachments.** Catalog/Price list MUST be included or proposal will not be considered. Asphalt Distributors, Accessories and Attachments.

No Bid

Item Notes: **PROPOSAL NOTE 1:** Vendors shall submit catalog(s)/price list(s) with their Proposal response or the Proposal will not be considered. Vendors shall submit catalog(s)/price list(s) with the Proposal in a readily available and readable electronic format, with Excel or searchable PDF preferred. **No paper catalogs or manufacturer/vendor websites will be accepted.**

PROPOSAL NOTE 2: A Vendor proposing shall be approved and authorized by the manufacturer to sell, install, and service the brand(s) of product(s) proposed. Proposers responding to this Proposal Invitation shall submit an approval letter from each manufacturer for each product line proposed. The requirement to provide an approval letter from the manufacturer applies to both seller and installers. Manufacturers responding directly to this Proposal Invitation, in lieu of an authorization letter, shall submit a written explanation that the company is the manufacturer of the product line(s) proposed. Dealer authorization agreements will not be accepted as a substitute for the manufacturer authorization letter.

The manufacturer authorization letters must include the following:
1. Composed on manufacturer letterhead (an email message is not a substitute for the letter),
2. Addressed to “The Local Government Purchasing Cooperative”,
3. Dated within the current calendar year,
4. List the regions in Texas and states that Vendor is authorized to sell, install, and service product(s) proposed, and
5. Name, Title, and Signature of Authorized Official from Manufacturer.

PROPOSAL NOTE 3: **"Pre-Owned/Reconditioned/Retired Rental"** shall be defined as equipment having been checked and inspected by a manufacturer-authorized dealer prior to sale and shall be no older than sixty (60) months as of the date of delivery. Proposers responding to this Proposal Invitation for **"Pre-Owned/Reconditioned/Retired Rental"** equipment must also be approved by the manufacturer to sell pre-owned/reconditioned/retired rental equipment for the brand submitted and must submit an approval letter from each manufacturer with the Proposal. Manufacturer authorization letters must include the regions in which equipment can be sold. Equipment listed as **"Pre-Owned/Reconditioned/Retired Rental"** shall be in good and working condition and shall include a minimum warranty of one-hundred eighty (180) days against any defect from workmanship and parts and shall cover equipment repairs and/or component replacement. Total equipment usage hours as displayed on the service meter will have a maximum of one thousand (1,000) hours per year of age and a minimum of seventy-five percent (75%) of wear remaining for tires, track, and/or ground engagement tools.

Vendors proposing multiple manufacturer product lines and/or catalog/price list per line item must submit the information as follows or proposal may not be considered:

- Select **"Add Alternate"** for each additional manufacturer product line and/or catalog/price list proposed
- Vendor’s must list one specific percentage discount for each manufacturer and/or catalog/price list listed

Item Attributes

1. State Name of Manufacturer Catalog or Product Price list Proposed with Discount Percentage

NOTE: Do not reference SKU, Reference Numbers, Websites, and/or "See Attached/Enclosed".

No response

39

Section I: New Construction, Road, Bridge and Repair Equipment-PURCHASE ONLY

Discount (%) off catalog/price list for **Truck Mounted Excavators, Accessories and Attachments**. Catalog/Price list MUST be included or proposal will not be considered. Asphalt Distributors, Accessories and Attachments.

No Bid

Item Notes: **PROPOSAL NOTE 1:** Vendors shall submit catalog(s)/price list(s) with their Proposal response or the Proposal will not be considered. Vendors shall submit catalog(s)/price list(s) with the Proposal in a readily available and readable electronic format, with Excel or searchable PDF preferred. **No paper catalogs or manufacturer/vendor websites will be accepted.**

PROPOSAL NOTE 2: A Vendor proposing shall be approved and authorized by the manufacturer to sell, install, and service the brand(s) of product(s) proposed. Proposers responding to this Proposal Invitation shall submit an approval letter from each manufacturer for each product line proposed. The requirement to provide an approval letter from the manufacturer applies to both seller and installers. Manufacturers responding directly to this Proposal Invitation, in lieu of an authorization letter, shall submit a written explanation that the company is the manufacturer of the product line(s) proposed. Dealer authorization agreements will not be accepted as a substitute for the manufacturer authorization letter.

The manufacturer authorization letters must include the following:
1. Composed on manufacturer letterhead (an email message is not a substitute for the letter),
2. Addressed to “The Local Government Purchasing Cooperative”,
3. Dated within the current calendar year,
4. List the regions in Texas and states that Vendor is authorized to sell, install, and service product(s) proposed, and
5. Name, Title, and Signature of Authorized Official from Manufacturer.

PROPOSAL NOTE 3: **"Pre-Owned/Reconditioned/Retired Rental"** shall be defined as equipment having been checked and inspected by a manufacturer-authorized dealer prior to sale and shall be no older than sixty (60) months as of the date of delivery. Proposers responding to this Proposal Invitation for **"Pre-Owned/Reconditioned/Retired Rental"** equipment must also be approved by the manufacturer to sell pre-owned/reconditioned/retired rental equipment for the brand submitted and must submit an approval letter from each manufacturer with the Proposal. Manufacturer authorization letters must include the regions in which equipment can be sold. Equipment listed as **"Pre-Owned/Reconditioned/Retired Rental"** shall be in good and working condition and shall include a minimum warranty of one-hundred eighty (180) days against any defect from workmanship and parts and shall cover equipment repairs and/or component replacement. Total equipment usage hours as displayed on the service meter will have a maximum of one thousand (1,000) hours per year of age and a minimum of seventy-five percent (75%) of wear remaining for tires, track, and/or ground engagement tools.

Vendors proposing multiple manufacturer product lines and/or catalog/price list per line item must submit the information as follows or proposal may not be considered:

- Select **"Add Alternate"** for each additional manufacturer product line and/or catalog/price list proposed
- Vendor’s must list one specific percentage discount for each manufacturer and/or catalog/price list listed

Item Attributes

1. State Name of Manufacturer Catalog or Product Price list Proposed with Discount Percentage

NOTE: Do not reference SKU, Reference Numbers, Websites, and/or "See Attached/Enclosed".

No response

40

Section I: New Construction, Road, Bridge and Repair Equipment-PURCHASE ONLY

Discount (%) off catalog/price list for **All Types of Truck Mounted Aerial Lifts, Accessories and Attachments** (telescopic, cable handler, digger/hydraulic derrick, and related aerial lifts). Catalog/Price list MUST be included or proposal will not be considered. Asphalt Distributors, Accessories and Attachments.

No Bid

Item Notes: **PROPOSAL NOTE 1:** Vendors shall submit catalog(s)/price list(s) with their Proposal response or the Proposal will not be considered. Vendors shall submit catalog(s)/price list(s) with the Proposal in a readily available and readable electronic format, with Excel or searchable PDF preferred. **No paper catalogs or manufacturer/vendor websites will be accepted.**

PROPOSAL NOTE 2: A Vendor proposing shall be approved and authorized by the manufacturer to sell, install, and service the brand(s) of product(s) proposed. Proposers responding to this Proposal Invitation shall submit an approval letter from each manufacturer for each product line proposed. The requirement to provide an approval letter from the manufacturer applies to both seller and installers. Manufacturers responding directly to this Proposal Invitation, in lieu of an authorization letter, shall submit a written explanation that the company is the manufacturer of the product line(s) proposed. Dealer authorization agreements will not be accepted as a substitute for the manufacturer authorization letter.

The manufacturer authorization letters must include the following:
1. Composed on manufacturer letterhead (an email message is not a substitute for the letter),
2. Addressed to “The Local Government Purchasing Cooperative”,
3. Dated within the current calendar year,
4. List the regions in Texas and states that Vendor is authorized to sell, install, and service product(s) proposed, and
5. Name, Title, and Signature of Authorized Official from Manufacturer.

PROPOSAL NOTE 3: **"Pre-Owned/Reconditioned/Retired Rental"** shall be defined as equipment having been checked and inspected by a manufacturer-authorized dealer prior to sale and shall be no older than sixty (60) months as of the date of delivery. Proposers responding to this Proposal Invitation for **"Pre-Owned/Reconditioned/Retired Rental"** equipment must also be approved by the manufacturer to sell pre-owned/reconditioned/retired rental equipment for the brand submitted and must submit an approval letter from each manufacturer with the Proposal. Manufacturer authorization letters must include the regions in which equipment can be sold. Equipment listed as **"Pre-Owned/Reconditioned/Retired Rental"** shall be in good and working condition and shall include a minimum warranty of one-hundred eighty (180) days against any defect from workmanship and parts and shall cover equipment repairs and/or component replacement. Total equipment usage hours as displayed on the service meter will have a maximum of one thousand (1,000) hours per year of age and a minimum of seventy-five percent (75%) of wear remaining for tires, track, and/or ground engagement tools.

Vendors proposing multiple manufacturer product lines and/or catalog/price list per line item must submit the information as follows or proposal may not be considered:

- Select **"Add Alternate"** for each additional manufacturer product line and/or catalog/price list proposed
- Vendor’s must list one specific percentage discount for each manufacturer and/or catalog/price list listed

Item Attributes

1. State Name of Manufacturer Catalog or Product Price list Proposed with Discount Percentage

NOTE: Do not reference SKU, Reference Numbers, Websites, and/or "See Attached/Enclosed".

No response

41

Section I: New Construction, Road, Bridge and Repair Equipment-PURCHASE ONLY

Discount (%) off catalog/price list for **Utility Vehicles, Accessories and Attachments**. Catalog/Price list MUST be included or proposal will not be considered. Asphalt Distributors, Accessories and Attachments.

No Bid

Item Notes: **PROPOSAL NOTE 1:** Vendors shall submit catalog(s)/price list(s) with their Proposal response or the Proposal will not be considered. Vendors shall submit catalog(s)/price list(s) with the Proposal in a readily available and readable electronic format, with Excel or searchable PDF preferred. **No paper catalogs or manufacturer/vendor websites will be accepted.**

PROPOSAL NOTE 2: A Vendor proposing shall be approved and authorized by the manufacturer to sell, install, and service the brand(s) of product(s) proposed. Proposers responding to this Proposal Invitation shall submit an approval letter from each manufacturer for each product line proposed. The requirement to provide an approval letter from the manufacturer applies to both seller and installers. Manufacturers responding directly to this Proposal Invitation, in lieu of an authorization letter, shall submit a written explanation that the company is the manufacturer of the product line(s) proposed. Dealer authorization agreements will not be accepted as a substitute for the manufacturer authorization letter.

The manufacturer authorization letters must include the following:
1. Composed on manufacturer letterhead (an email message is not a substitute for the letter),
2. Addressed to “The Local Government Purchasing Cooperative”,
3. Dated within the current calendar year,
4. List the regions in Texas and states that Vendor is authorized to sell, install, and service product(s) proposed, and
5. Name, Title, and Signature of Authorized Official from Manufacturer.

PROPOSAL NOTE 3: **"Pre-Owned/Reconditioned/Retired Rental"** shall be defined as equipment having been checked and inspected by a manufacturer-authorized dealer prior to sale and shall be no older than sixty (60) months as of the date of delivery. Proposers responding to this Proposal Invitation for **"Pre-Owned/Reconditioned/Retired Rental"** equipment must also be approved by the manufacturer to sell pre-owned/reconditioned/retired rental equipment for the brand submitted and must submit an approval letter from each manufacturer with the Proposal. Manufacturer authorization letters must include the regions in which equipment can be sold. Equipment listed as **"Pre-Owned/Reconditioned/Retired Rental"** shall be in good and working condition and shall include a minimum warranty of one-hundred eighty (180) days against any defect from workmanship and parts and shall cover equipment repairs and/or component replacement. Total equipment usage hours as displayed on the service meter will have a maximum of one thousand (1,000) hours per year of age and a minimum of seventy-five percent (75%) of wear remaining for tires, track, and/or ground engagement tools.

Vendors proposing multiple manufacturer product lines and/or catalog/price list per line item must submit the information as follows or proposal may not be considered:

- Select **"Add Alternate"** for each additional manufacturer product line and/or catalog/price list proposed
- Vendor’s must list one specific percentage discount for each manufacturer and/or catalog/price list listed

Item Attributes

1. State Name of Manufacturer Catalog or Product Price list Proposed with Discount Percentage

NOTE: Do not reference SKU, Reference Numbers, Websites, and/or "See Attached/Enclosed".

No response

42

Section I: New Construction, Road, Bridge and Repair Equipment-PURCHASE ONLY

Discount (%) off catalog/price list for **Vibratory Soil Compactors and Rollers, Accessories and Attachments.** Catalog/Price list MUST be included or proposal will not be considered. Asphalt Distributors, Accessories and Attachments.

Total: 25%

Item Notes: **PROPOSAL NOTE 1:** Vendors shall submit catalog(s)/price list(s) with their Proposal response or the Proposal will not be considered. Vendors shall submit catalog(s)/price list(s) with the Proposal in a readily available and readable electronic format, with Excel or searchable PDF preferred. **No paper catalogs or manufacturer/vendor websites will be accepted.**

PROPOSAL NOTE 2: A Vendor proposing shall be approved and authorized by the manufacturer to sell, install, and service the brand(s) of product(s) proposed. Proposers responding to this Proposal Invitation shall submit an approval letter from each manufacturer for each product line proposed. The requirement to provide an approval letter from the manufacturer applies to both seller and installers. Manufacturers responding directly to this Proposal Invitation, in lieu of an authorization letter, shall submit a written explanation that the company is the manufacturer of the product line(s) proposed. Dealer authorization agreements will not be accepted as a substitute for the manufacturer authorization letter.

The manufacturer authorization letters must include the following:
1. Composed on manufacturer letterhead (an email message is not a substitute for the letter),
2. Addressed to “The Local Government Purchasing Cooperative”,
3. Dated within the current calendar year,
4. List the regions in Texas and states that Vendor is authorized to sell, install, and service product(s) proposed, and
5. Name, Title, and Signature of Authorized Official from Manufacturer.

PROPOSAL NOTE 3: **"Pre-Owned/Reconditioned/Retired Rental"** shall be defined as equipment having been checked and inspected by a manufacturer-authorized dealer prior to sale and shall be no older than sixty (60) months as of the date of delivery. Proposers responding to this Proposal Invitation for **"Pre-Owned/Reconditioned/Retired Rental"** equipment must also be approved by the manufacturer to sell pre-owned/reconditioned/retired rental equipment for the brand submitted and must submit an approval letter from each manufacturer with the Proposal. Manufacturer authorization letters must include the regions in which equipment can be sold. Equipment listed as **"Pre-Owned/Reconditioned/Retired Rental"** shall be in good and working condition and shall include a minimum warranty of one-hundred eighty (180) days against any defect from workmanship and parts and shall cover equipment repairs and/or component replacement. Total equipment usage hours as displayed on the service meter will have a maximum of one thousand (1,000) hours per year of age and a minimum of seventy-five percent (75%) of wear remaining for tires, track, and/or ground engagement tools.

Vendors proposing multiple manufacturer product lines and/or catalog/price list per line item must submit the information as follows or proposal may not be considered:

- Select **"Add Alternate"** for each additional manufacturer product line and/or catalog/price list proposed
- Vendor’s must list one specific percentage discount for each manufacturer and/or catalog/price list listed

Item Attributes

1. State Name of Manufacturer Catalog or Product Price list Proposed with Discount Percentage

NOTE: Do not reference SKU, Reference Numbers, Websites, and/or "See Attached/Enclosed".

Case Construction Price Book

43

Section I: New Construction, Road, Bridge and Repair Equipment-PURCHASE ONLY

Discount (%) off catalog/price list for **Waste Handling Wheel Loaders and Landfill Compactors, Accessories and Attachments.** Catalog/Price list MUST be included or proposal will not be considered. Asphalt Distributors, Accessories and Attachments.

No Bid

Item Notes: **PROPOSAL NOTE 1:** Vendors shall submit catalog(s)/price list(s) with their Proposal response or the Proposal will not be considered. Vendors shall submit catalog(s)/price list(s) with the Proposal in a readily available and readable electronic format, with Excel or searchable PDF preferred. **No paper catalogs or manufacturer/vendor websites will be accepted.**

PROPOSAL NOTE 2: A Vendor proposing shall be approved and authorized by the manufacturer to sell, install, and service the brand(s) of product(s) proposed. Proposers responding to this Proposal Invitation shall submit an approval letter from each manufacturer for each product line proposed. The requirement to provide an approval letter from the manufacturer applies to both seller and installers. Manufacturers responding directly to this Proposal Invitation, in lieu of an authorization letter, shall submit a written explanation that the company is the manufacturer of the product line(s) proposed. Dealer authorization agreements will not be accepted as a substitute for the manufacturer authorization letter.

The manufacturer authorization letters must include the following:
1. Composed on manufacturer letterhead (an email message is not a substitute for the letter),
2. Addressed to “The Local Government Purchasing Cooperative”,
3. Dated within the current calendar year,
4. List the regions in Texas and states that Vendor is authorized to sell, install, and service product(s) proposed, and
5. Name, Title, and Signature of Authorized Official from Manufacturer.

PROPOSAL NOTE 3: **"Pre-Owned/Reconditioned/Retired Rental"** shall be defined as equipment having been checked and inspected by a manufacturer-authorized dealer prior to sale and shall be no older than sixty (60) months as of the date of delivery. Proposers responding to this Proposal Invitation for **"Pre-Owned/Reconditioned/Retired Rental"** equipment must also be approved by the manufacturer to sell pre-owned/reconditioned/retired rental equipment for the brand submitted and must submit an approval letter from each manufacturer with the Proposal. Manufacturer authorization letters must include the regions in which equipment can be sold. Equipment listed as **"Pre-Owned/Reconditioned/Retired Rental"** shall be in good and working condition and shall include a minimum warranty of one-hundred eighty (180) days against any defect from workmanship and parts and shall cover equipment repairs and/or component replacement. Total equipment usage hours as displayed on the service meter will have a maximum of one thousand (1,000) hours per year of age and a minimum of seventy-five percent (75%) of wear remaining for tires, track, and/or ground engagement tools.

Vendors proposing multiple manufacturer product lines and/or catalog/price list per line item must submit the information as follows or proposal may not be considered:

- Select **"Add Alternate"** for each additional manufacturer product line and/or catalog/price list proposed
- Vendor’s must list one specific percentage discount for each manufacturer and/or catalog/price list listed

Item Attributes

1. State Name of Manufacturer Catalog or Product Price list Proposed with Discount Percentage

NOTE: Do not reference SKU, Reference Numbers, Websites, and/or "See Attached/Enclosed".

No response

44

Section I: New Construction, Road, Bridge and Repair Equipment-PURCHASE ONLY

Discount (%) off catalog/price list for **Wheel Dozers, Accessories and Attachments.** Catalog/Price list MUST be included or proposal will not be considered. Asphalt Distributors, Accessories and Attachments.

No Bid

Item Notes: **PROPOSAL NOTE 1:** Vendors shall submit catalog(s)/price list(s) with their Proposal response or the Proposal will not be considered. Vendors shall submit catalog(s)/price list(s) with the Proposal in a readily available and readable electronic format, with Excel or searchable PDF preferred. **No paper catalogs or manufacturer/vendor websites will be accepted.**

PROPOSAL NOTE 2: A Vendor proposing shall be approved and authorized by the manufacturer to sell, install, and service the brand(s) of product(s) proposed. Proposers responding to this Proposal Invitation shall submit an approval letter from each manufacturer for each product line proposed. The requirement to provide an approval letter from the manufacturer applies to both seller and installers. Manufacturers responding directly to this Proposal Invitation, in lieu of an authorization letter, shall submit a written explanation that the company is the manufacturer of the product line(s) proposed. Dealer authorization agreements will not be accepted as a substitute for the manufacturer authorization letter.

The manufacturer authorization letters must include the following:
1. Composed on manufacturer letterhead (an email message is not a substitute for the letter),
2. Addressed to “The Local Government Purchasing Cooperative”,
3. Dated within the current calendar year,
4. List the regions in Texas and states that Vendor is authorized to sell, install, and service product(s) proposed, and
5. Name, Title, and Signature of Authorized Official from Manufacturer.

PROPOSAL NOTE 3: **"Pre-Owned/Reconditioned/Retired Rental"** shall be defined as equipment having been checked and inspected by a manufacturer-authorized dealer prior to sale and shall be no older than sixty (60) months as of the date of delivery. Proposers responding to this Proposal Invitation for **"Pre-Owned/Reconditioned/Retired Rental"** equipment must also be approved by the manufacturer to sell pre-owned/reconditioned/retired rental equipment for the brand submitted and must submit an approval letter from each manufacturer with the Proposal. Manufacturer authorization letters must include the regions in which equipment can be sold. Equipment listed as **"Pre-Owned/Reconditioned/Retired Rental"** shall be in good and working condition and shall include a minimum warranty of one-hundred eighty (180) days against any defect from workmanship and parts and shall cover equipment repairs and/or component replacement. Total equipment usage hours as displayed on the service meter will have a maximum of one thousand (1,000) hours per year of age and a minimum of seventy-five percent (75%) of wear remaining for tires, track, and/or ground engagement tools.

Vendors proposing multiple manufacturer product lines and/or catalog/price list per line item must submit the information as follows or proposal may not be considered:

- Select **"Add Alternate"** for each additional manufacturer product line and/or catalog/price list proposed
- Vendor’s must list one specific percentage discount for each manufacturer and/or catalog/price list listed

Item Attributes

1. State Name of Manufacturer Catalog or Product Price list Proposed with Discount Percentage

NOTE: Do not reference SKU, Reference Numbers, Websites, and/or "See Attached/Enclosed".

No response

45

Section I: New Construction, Road, Bridge and Repair Equipment-PURCHASE ONLY

Discount (%) off catalog/price list for **Wheel Excavators, Accessories and Attachments.** Catalog/Price list MUST be included or proposal will not be considered. Asphalt Distributors, Accessories and Attachments.

Total: 35%

Item Notes: **PROPOSAL NOTE 1:** Vendors shall submit catalog(s)/price list(s) with their Proposal response or the Proposal will not be considered. Vendors shall submit catalog(s)/price list(s) with the Proposal in a readily available and readable electronic format, with Excel or searchable PDF preferred. **No paper catalogs or manufacturer/vendor websites will be accepted.**

PROPOSAL NOTE 2: A Vendor proposing shall be approved and authorized by the manufacturer to sell, install, and service the brand(s) of product(s) proposed. Proposers responding to this Proposal Invitation shall submit an approval letter from each manufacturer for each product line proposed. The requirement to provide an approval letter from the manufacturer applies to both seller and installers. Manufacturers responding directly to this Proposal Invitation, in lieu of an authorization letter, shall submit a written explanation that the company is the manufacturer of the product line(s) proposed. Dealer authorization agreements will not be accepted as a substitute for the manufacturer authorization letter.

The manufacturer authorization letters must include the following:
1. Composed on manufacturer letterhead (an email message is not a substitute for the letter),
2. Addressed to “The Local Government Purchasing Cooperative”,
3. Dated within the current calendar year,
4. List the regions in Texas and states that Vendor is authorized to sell, install, and service product(s) proposed, and
5. Name, Title, and Signature of Authorized Official from Manufacturer.

PROPOSAL NOTE 3: **"Pre-Owned/Reconditioned/Retired Rental"** shall be defined as equipment having been checked and inspected by a manufacturer-authorized dealer prior to sale and shall be no older than sixty (60) months as of the date of delivery. Proposers responding to this Proposal Invitation for **"Pre-Owned/Reconditioned/Retired Rental"** equipment must also be approved by the manufacturer to sell pre-owned/reconditioned/retired rental equipment for the brand submitted and must submit an approval letter from each manufacturer with the Proposal. Manufacturer authorization letters must include the regions in which equipment can be sold. Equipment listed as **"Pre-Owned/Reconditioned/Retired Rental"** shall be in good and working condition and shall include a minimum warranty of one-hundred eighty (180) days against any defect from workmanship and parts and shall cover equipment repairs and/or component replacement. Total equipment usage hours as displayed on the service meter will have a maximum of one thousand (1,000) hours per year of age and a minimum of seventy-five percent (75%) of wear remaining for tires, track, and/or ground engagement tools.

Vendors proposing multiple manufacturer product lines and/or catalog/price list per line item must submit the information as follows or proposal may not be considered:

- Select **"Add Alternate"** for each additional manufacturer product line and/or catalog/price list proposed
- Vendor’s must list one specific percentage discount for each manufacturer and/or catalog/price list listed

Item Attributes

1. State Name of Manufacturer Catalog or Product Price list Proposed with Discount Percentage

NOTE: Do not reference SKU, Reference Numbers, Websites, and/or "See Attached/Enclosed".

Hyundai Price List

46

Section I: New Construction, Road, Bridge and Repair Equipment-PURCHASE ONLY

Discount (%) off catalog/price list for **Wheel Loaders, Accessories and Attachments.** Catalog/Price list MUST be included or proposal will not be considered. Asphalt Distributors, Accessories and Attachments.

Total: 25%

Item Notes: **PROPOSAL NOTE 1:** Vendors shall submit catalog(s)/price list(s) with their Proposal response or the Proposal will not be considered. Vendors shall submit catalog(s)/price list(s) with the Proposal in a readily available and readable electronic format, with Excel or searchable PDF preferred. **No paper catalogs or manufacturer/vendor websites will be accepted.**

PROPOSAL NOTE 2: A Vendor proposing shall be approved and authorized by the manufacturer to sell, install, and service the brand(s) of product(s) proposed. Proposers responding to this Proposal Invitation shall submit an approval letter from each manufacturer for each product line proposed. The requirement to provide an approval letter from the manufacturer applies to both seller and installers. Manufacturers responding directly to this Proposal Invitation, in lieu of an authorization letter, shall submit a written explanation that the company is the manufacturer of the product line(s) proposed. Dealer authorization agreements will not be accepted as a substitute for the manufacturer authorization letter.

The manufacturer authorization letters must include the following:
1. Composed on manufacturer letterhead (an email message is not a substitute for the letter),
2. Addressed to “The Local Government Purchasing Cooperative”,
3. Dated within the current calendar year,
4. List the regions in Texas and states that Vendor is authorized to sell, install, and service product(s) proposed, and
5. Name, Title, and Signature of Authorized Official from Manufacturer.

PROPOSAL NOTE 3: **"Pre-Owned/Reconditioned/Retired Rental"** shall be defined as equipment having been checked and inspected by a manufacturer-authorized dealer prior to sale and shall be no older than sixty (60) months as of the date of delivery. Proposers responding to this Proposal Invitation for **"Pre-Owned/Reconditioned/Retired Rental"** equipment must also be approved by the manufacturer to sell pre-owned/reconditioned/retired rental equipment for the brand submitted and must submit an approval letter from each manufacturer with the Proposal. Manufacturer authorization letters must include the regions in which equipment can be sold. Equipment listed as **"Pre-Owned/Reconditioned/Retired Rental"** shall be in good and working condition and shall include a minimum warranty of one-hundred eighty (180) days against any defect from workmanship and parts and shall cover equipment repairs and/or component replacement. Total equipment usage hours as displayed on the service meter will have a maximum of one thousand (1,000) hours per year of age and a minimum of seventy-five percent (75%) of wear remaining for tires, track, and/or ground engagement tools.

Vendors proposing multiple manufacturer product lines and/or catalog/price list per line item must submit the information as follows or proposal may not be considered:

- Select **"Add Alternate"** for each additional manufacturer product line and/or catalog/price list proposed
- Vendor’s must list one specific percentage discount for each manufacturer and/or catalog/price list listed

Item Attributes

1. State Name of Manufacturer Catalog or Product Price list Proposed with Discount Percentage

NOTE: Do not reference SKU, Reference Numbers, Websites, and/or "See Attached/Enclosed".

Case Wheel Loader Price Book

Alternate 1

Section I: New Construction, Road, Bridge and Repair Equipment-PURCHASE ONLY
Discount (%) off catalog/price list for **Wheel Loaders, Accessories and Attachments.** Catalog/Price list MUST be included or proposal will not be considered. Asphalt Distributors, Accessories and Attachments.

Total: 25%

Item Attributes

1. State Name of Manufacturer Catalog or Product Price list Proposed with Discount Percentage

NOTE: Do not reference SKU, Reference Numbers, Websites, and/or "See Attached/Enclosed".

Case Compact WL Price Book

Alternate 2

Section I: New Construction, Road, Bridge and Repair Equipment-PURCHASE ONLY
Discount (%) off catalog/price list for **Wheel Loaders, Accessories and Attachments.** Catalog/Price list MUST be included or proposal will not be considered. Asphalt Distributors, Accessories and Attachments.

Total: 35%

Item Attributes

1. State Name of Manufacturer Catalog or Product Price list Proposed with Discount Percentage

NOTE: Do not reference SKU, Reference Numbers, Websites, and/or "See Attached/Enclosed".

Hyundai Price List

Alternate 3

Section I: New Construction, Road, Bridge and Repair Equipment-PURCHASE ONLY
Discount (%) off catalog/price list for **Wheel Loaders, Accessories and Attachments.** Catalog/Price list MUST be included or proposal will not be considered. Asphalt Distributors, Accessories and Attachments.

Total: 10%

Item Attributes

1. State Name of Manufacturer Catalog or Product Price list Proposed with Discount Percentage

NOTE: Do not reference SKU, Reference Numbers, Websites, and/or "See Attached/Enclosed".

Takeuchi Price Book

47

Section I: New Construction, Road, Bridge and Repair Equipment-PURCHASE ONLY

Discount (%) off catalog/price list for **Heavy Duty Paint Striping Equipment, Accessories and Attachments.** Catalog/Price list MUST be included or proposal will not be considered. Asphalt Distributors, Accessories and Attachments.

No Bid

Item Notes: **PROPOSAL NOTE 1:** Vendors shall submit catalog(s)/price list(s) with their Proposal response or the Proposal will not be considered. Vendors shall submit catalog(s)/price list(s) with the Proposal in a readily available and readable electronic format, with Excel or searchable PDF preferred. **No paper catalogs or manufacturer/vendor websites will be accepted.**

PROPOSAL NOTE 2: A Vendor proposing shall be approved and authorized by the manufacturer to sell, install, and service the brand(s) of product(s) proposed. Proposers responding to this Proposal Invitation shall submit an approval letter from each manufacturer for each product line proposed. The requirement to provide an approval letter from the manufacturer applies to both seller and installers. Manufacturers responding directly to this Proposal Invitation, in lieu of an authorization letter, shall submit a written explanation that the company is the manufacturer of the product line(s) proposed. Dealer authorization agreements will not be accepted as a substitute for the manufacturer authorization letter.

The manufacturer authorization letters must include the following:
1. Composed on manufacturer letterhead (an email message is not a substitute for the letter),
2. Addressed to “The Local Government Purchasing Cooperative”,
3. Dated within the current calendar year,
4. List the regions in Texas and states that Vendor is authorized to sell, install, and service product(s) proposed, and
5. Name, Title, and Signature of Authorized Official from Manufacturer.

PROPOSAL NOTE 3: **"Pre-Owned/Reconditioned/Retired Rental"** shall be defined as equipment having been checked and inspected by a manufacturer-authorized dealer prior to sale and shall be no older than sixty (60) months as of the date of delivery. Proposers responding to this Proposal Invitation for **"Pre-Owned/Reconditioned/Retired Rental"** equipment must also be approved by the manufacturer to sell pre-owned/reconditioned/retired rental equipment for the brand submitted and must submit an approval letter from each manufacturer with the Proposal. Manufacturer authorization letters must include the regions in which equipment can be sold. Equipment listed as **"Pre-Owned/Reconditioned/Retired Rental"** shall be in good and working condition and shall include a minimum warranty of one-hundred eighty (180) days against any defect from workmanship and parts and shall cover equipment repairs and/or component replacement. Total equipment usage hours as displayed on the service meter will have a maximum of one thousand (1,000) hours per year of age and a minimum of seventy-five percent (75%) of wear remaining for tires, track, and/or ground engagement tools.

Vendors proposing multiple manufacturer product lines and/or catalog/price list per line item must submit the information as follows or proposal may not be considered:

- Select **"Add Alternate"** for each additional manufacturer product line and/or catalog/price list proposed
- Vendor’s must list one specific percentage discount for each manufacturer and/or catalog/price list listed

Item Attributes

1. State Name of Manufacturer Catalog or Product Price list Proposed with Discount Percentage

NOTE: Do not reference SKU, Reference Numbers, Websites, and/or "See Attached/Enclosed".

No response

48

Section I: New Construction, Road, Bridge and Repair Equipment-PURCHASE ONLY

Discount (%) off catalog/price list for **All Other Construction, Road, Bridge, Other Equipment, Accessories and Attachments.** Catalog/Price list MUST be included or proposal will not be considered. Asphalt Distributors, Accessories and Attachments.

No Bid

Item Notes: **PROPOSAL NOTE 1:** Vendors shall submit catalog(s)/price list(s) with their Proposal response or the Proposal will not be considered. Vendors shall submit catalog(s)/price list(s) with the Proposal in a readily available and readable electronic format, with Excel or searchable PDF preferred. **No paper catalogs or manufacturer/vendor websites will be accepted.**

PROPOSAL NOTE 2: A Vendor proposing shall be approved and authorized by the manufacturer to sell, install, and service the brand(s) of product(s) proposed. Proposers responding to this Proposal Invitation shall submit an approval letter from each manufacturer for each product line proposed. The requirement to provide an approval letter from the manufacturer applies to both seller and installers. Manufacturers responding directly to this Proposal Invitation, in lieu of an authorization letter, shall submit a written explanation that the company is the manufacturer of the product line(s) proposed. Dealer authorization agreements will not be accepted as a substitute for the manufacturer authorization letter.

The manufacturer authorization letters must include the following:
1. Composed on manufacturer letterhead (an email message is not a substitute for the letter),
2. Addressed to “The Local Government Purchasing Cooperative”,
3. Dated within the current calendar year,
4. List the regions in Texas and states that Vendor is authorized to sell, install, and service product(s) proposed, and
5. Name, Title, and Signature of Authorized Official from Manufacturer.

PROPOSAL NOTE 3: **"Pre-Owned/Reconditioned/Retired Rental"** shall be defined as equipment having been checked and inspected by a manufacturer-authorized dealer prior to sale and shall be no older than sixty (60) months as of the date of delivery. Proposers responding to this Proposal Invitation for **"Pre-Owned/Reconditioned/Retired Rental"** equipment must also be approved by the manufacturer to sell pre-owned/reconditioned/retired rental equipment for the brand submitted and must submit an approval letter from each manufacturer with the Proposal. Manufacturer authorization letters must include the regions in which equipment can be sold. Equipment listed as **"Pre-Owned/Reconditioned/Retired Rental"** shall be in good and working condition and shall include a minimum warranty of one-hundred eighty (180) days against any defect from workmanship and parts and shall cover equipment repairs and/or component replacement. Total equipment usage hours as displayed on the service meter will have a maximum of one thousand (1,000) hours per year of age and a minimum of seventy-five percent (75%) of wear remaining for tires, track, and/or ground engagement tools.

Vendors proposing multiple manufacturer product lines and/or catalog/price list per line item must submit the information as follows or proposal may not be considered:

- Select **"Add Alternate"** for each additional manufacturer product line and/or catalog/price list proposed
- Vendor’s must list one specific percentage discount for each manufacturer and/or catalog/price list listed

Item Attributes

1. State Name of Manufacturer Catalog or Product Price list Proposed with Discount Percentage

NOTE: Do not reference SKU, Reference Numbers, Websites, and/or "See Attached/Enclosed".

No response

49

Section I: New Construction, Road, Bridge and Repair Equipment-PURCHASE ONLY

Discount (%) off catalog/price list for **Repair Parts on All Types of Construction, Road, Bridge, and Other Equipment.** Catalog/Price list MUST be included or proposal will not be considered. Asphalt Distributors, Accessories and Attachments.

No Bid

Item Notes: **PROPOSAL NOTE 1:** Vendors shall submit catalog(s)/price list(s) with their Proposal response or the Proposal will not be considered. Vendors shall submit catalog(s)/price list(s) with the Proposal in a readily available and readable electronic format, with Excel or searchable PDF preferred. **No paper catalogs or manufacturer/vendor websites will be accepted.**

PROPOSAL NOTE 2: A Vendor proposing shall be approved and authorized by the manufacturer to sell, install, and service the brand(s) of product(s) proposed. Proposers responding to this Proposal Invitation shall submit an approval letter from each manufacturer for each product line proposed. The requirement to provide an approval letter from the manufacturer applies to both seller and installers. Manufacturers responding directly to this Proposal Invitation, in lieu of an authorization letter, shall submit a written explanation that the company is the manufacturer of the product line(s) proposed. Dealer authorization agreements will not be accepted as a substitute for the manufacturer authorization letter.

The manufacturer authorization letters must include the following:
1. Composed on manufacturer letterhead (an email message is not a substitute for the letter),
2. Addressed to “The Local Government Purchasing Cooperative”,
3. Dated within the current calendar year,
4. List the regions in Texas and states that Vendor is authorized to sell, install, and service product(s) proposed, and
5. Name, Title, and Signature of Authorized Official from Manufacturer.

PROPOSAL NOTE 3: **"Pre-Owned/Reconditioned/Retired Rental"** shall be defined as equipment having been checked and inspected by a manufacturer-authorized dealer prior to sale and shall be no older than sixty (60) months as of the date of delivery. Proposers responding to this Proposal Invitation for **"Pre-Owned/Reconditioned/Retired Rental"** equipment must also be approved by the manufacturer to sell pre-owned/reconditioned/retired rental equipment for the brand submitted and must submit an approval letter from each manufacturer with the Proposal. Manufacturer authorization letters must include the regions in which equipment can be sold. Equipment listed as **"Pre-Owned/Reconditioned/Retired Rental"** shall be in good and working condition and shall include a minimum warranty of one-hundred eighty (180) days against any defect from workmanship and parts and shall cover equipment repairs and/or component replacement. Total equipment usage hours as displayed on the service meter will have a maximum of one thousand (1,000) hours per year of age and a minimum of seventy-five percent (75%) of wear remaining for tires, track, and/or ground engagement tools.

Vendors proposing multiple manufacturer product lines and/or catalog/price list per line item must submit the information as follows or proposal may not be considered:

- Select **"Add Alternate"** for each additional manufacturer product line and/or catalog/price list proposed
- Vendor’s must list one specific percentage discount for each manufacturer and/or catalog/price list listed

Item Attributes

1. State Name of Manufacturer Catalog or Product Price list Proposed with Discount Percentage

NOTE: Do not reference SKU, Reference Numbers, Websites, and/or "See Attached/Enclosed".

No response

50

Section II: Construction, Road, Bridge, and Repair Equipment-RENTAL ONLY (Rental Rate Sheet must be submitted with Proposal or Proposal will not be considered).
Discount (%) off catalog/price list for **RENTAL of All Construction, Road, Bridge, Other Equipment, Accessories and Attachments.** Catalog/Price list MUST be included or proposal will not be considered. Asphalt Distributors, Accessories and Attachments.

Total: 0%

Item Notes: **PROPOSAL NOTE 1:** Vendors shall submit catalog(s)/price list(s) with their Proposal response or the Proposal will not be considered. Vendors shall submit catalog(s)/price list(s) with the Proposal in a readily available and readable electronic format, with Excel or searchable PDF preferred. **No paper catalogs or manufacturer/vendor websites will be accepted.**

PROPOSAL NOTE 2: A Vendor proposing shall be approved and authorized by the manufacturer to sell, install, and service the brand(s) of product(s) proposed. Proposers responding to this Proposal Invitation shall submit an approval letter from each manufacturer for each product line proposed. The requirement to provide an approval letter from the manufacturer applies to both seller and installers. Manufacturers responding directly to this Proposal Invitation, in lieu of an authorization letter, shall submit a written explanation that the company is the manufacturer of the product line(s) proposed. Dealer authorization agreements will not be accepted as a substitute for the manufacturer authorization letter.

The manufacturer authorization letters must include the following:
1. Composed on manufacturer letterhead (an email message is not a substitute for the letter),
2. Addressed to “The Local Government Purchasing Cooperative”,
3. Dated within the current calendar year,
4. List the regions in Texas and states that Vendor is authorized to sell, install, and service product(s) proposed, and
5. Name, Title, and Signature of Authorized Official from Manufacturer.

PROPOSAL NOTE 3: **"Pre-Owned/Reconditioned/Retired Rental"** shall be defined as equipment having been checked and inspected by a manufacturer-authorized dealer prior to sale and shall be no older than sixty (60) months as of the date of delivery. Proposers responding to this Proposal Invitation for **"Pre-Owned/Reconditioned/Retired Rental"** equipment must also be approved by the manufacturer to sell pre-owned/reconditioned/retired rental equipment for the brand submitted and must submit an approval letter from each manufacturer with the Proposal. Manufacturer authorization letters must include the regions in which equipment can be sold. Equipment listed as **"Pre-Owned/Reconditioned/Retired Rental"** shall be in good and working condition and shall include a minimum warranty of one-hundred eighty (180) days against any defect from workmanship and parts and shall cover equipment repairs and/or component replacement. Total equipment usage hours as displayed on the service meter will have a maximum of one thousand (1,000) hours per year of age and a minimum of seventy-five percent (75%) of wear remaining for tires, track, and/or ground engagement tools.

Vendors proposing multiple manufacturer product lines and/or catalog/price list per line item must submit the information as follows or proposal may not be considered:

- Select **"Add Alternate"** for each additional manufacturer product line and/or catalog/price list proposed
- Vendor’s must list one specific percentage discount for each manufacturer and/or catalog/price list listed

Item Attributes

1. State Name of Manufacturer Catalog or Product Price list Proposed with Discount Percentage

NOTE: Do not reference SKU, Reference Numbers, Websites, and/or "See Attached/Enclosed".

NPE Rental Rate Pricelist

5 1 **Section III: Construction, Road, Bridge, and Repair Equipment (Pre-Owned/Reconditioned/Retired Rental)- PURCHASE ONLY**

Discount (%) off catalog/price list for **All Types of Pre-Owned/Reconditioned/Retired Rental Construction, Road, Bridge, Other Equipment, Accessories and Attachments.** Catalog/Price list MUST be included or proposal will not be considered. Asphalt Distributors, Accessories and Attachments.

Total: 10%

Item Notes: **PROPOSAL NOTE 1:** Vendors shall submit catalog(s)/price list(s) with their Proposal response or the Proposal will not be considered. Vendors shall submit catalog(s)/price list(s) with the Proposal in a readily available and readable electronic format, with Excel or searchable PDF preferred. **No paper catalogs or manufacturer/vendor websites will be accepted.**

PROPOSAL NOTE 2: A Vendor proposing shall be approved and authorized by the manufacturer to sell, install, and service the brand(s) of product(s) proposed. Proposers responding to this Proposal Invitation shall submit an approval letter from each manufacturer for each product line proposed. The requirement to provide an approval letter from the manufacturer applies to both seller and installers. Manufacturers responding directly to this Proposal Invitation, in lieu of an authorization letter, shall submit a written explanation that the company is the manufacturer of the product line(s) proposed. Dealer authorization agreements will not be accepted as a substitute for the manufacturer authorization letter.

The manufacturer authorization letters must include the following:
1. Composed on manufacturer letterhead (an email message is not a substitute for the letter),
2. Addressed to “The Local Government Purchasing Cooperative”,
3. Dated within the current calendar year,
4. List the regions in Texas and states that Vendor is authorized to sell, install, and service product(s) proposed, and
5. Name, Title, and Signature of Authorized Official from Manufacturer.

PROPOSAL NOTE 3: **"Pre-Owned/Reconditioned/Retired Rental"** shall be defined as equipment having been checked and inspected by a manufacturer-authorized dealer prior to sale and shall be no older than sixty (60) months as of the date of delivery. Proposers responding to this Proposal Invitation for **"Pre-Owned/Reconditioned/Retired Rental"** equipment must also be approved by the manufacturer to sell pre-owned/reconditioned/retired rental equipment for the brand submitted and must submit an approval letter from each manufacturer with the Proposal. Manufacturer authorization letters must include the regions in which equipment can be sold. Equipment listed as **"Pre-Owned/Reconditioned/Retired Rental"** shall be in good and working condition and shall include a minimum warranty of one-hundred eighty (180) days against any defect from workmanship and parts and shall cover equipment repairs and/or component replacement. Total equipment usage hours as displayed on the service meter will have a maximum of one thousand (1,000) hours per year of age and a minimum of seventy-five percent (75%) of wear remaining for tires, track, and/or ground engagement tools.

Vendors proposing multiple manufacturer product lines and/or catalog/price list per line item must submit the information as follows or proposal may not be considered:

- Select **"Add Alternate"** for each additional manufacturer product line and/or catalog/price list proposed
- Vendor’s must list one specific percentage discount for each manufacturer and/or catalog/price list listed

Item Attributes

1. State Name of Manufacturer Catalog or Product Price list Proposed with Discount Percentage

NOTE: Do not reference SKU, Reference Numbers, Websites, and/or "See Attached/Enclosed".

Broce Used Pricelist

Alternate 1

Section III: Construction, Road, Bridge, and Repair Equipment (Pre-Owned/Reconditioned/Retired Rental)- PURCHASE ONLY

Discount (%) off catalog/price list for **All Types of Pre-Owned/Reconditioned/Retired Rental Construction, Road, Bridge, Other Equipment, Accessories and Attachments.** Catalog/Price list MUST be included or proposal will not be considered. Asphalt Distributors, Accessories and Attachments.

Total: 10%

Item Attributes

1. State Name of Manufacturer Catalog or Product Price list Proposed with Discount Percentage

NOTE: Do not reference SKU, Reference Numbers, Websites, and/or "See Attached/Enclosed".

Case Used Pricelist

Alternate 2

Section III: Construction, Road, Bridge, and Repair Equipment (Pre-Owned/Reconditioned/Retired Rental)- PURCHASE ONLY

Discount (%) off catalog/price list for **All Types of Pre-Owned/Reconditioned/Retired Rental Construction, Road, Bridge, Other Equipment, Accessories and Attachments.** Catalog/Price list MUST be included or proposal will not be considered. Asphalt Distributors, Accessories and Attachments.

Total: 10%

Item Attributes

1. State Name of Manufacturer Catalog or Product Price list Proposed with Discount Percentage

NOTE: Do not reference SKU, Reference Numbers, Websites, and/or "See Attached/Enclosed".

Hamm Used Pricelist

Alternate 3

Section III: Construction, Road, Bridge, and Repair Equipment (Pre-Owned/Reconditioned/Retired Rental)- PURCHASE ONLY

Discount (%) off catalog/price list for **All Types of Pre-Owned/Reconditioned/Retired Rental Construction, Road, Bridge, Other Equipment, Accessories and Attachments.** Catalog/Price list MUST be included or proposal will not be considered. Asphalt Distributors, Accessories and Attachments.

Total: 10%

Item Attributes

1. State Name of Manufacturer Catalog or Product Price list Proposed with Discount Percentage

NOTE: Do not reference SKU, Reference Numbers, Websites, and/or "See Attached/Enclosed".

Hyundai Used Pricelist

Alternate 4

Section III: Construction, Road, Bridge, and Repair Equipment (Pre-Owned/Reconditioned/Retired Rental)- PURCHASE ONLY

Discount (%) off catalog/price list for **All Types of Pre-Owned/Reconditioned/Retired Rental Construction, Road, Bridge, Other Equipment, Accessories and Attachments.** Catalog/Price list MUST be included or proposal will not be considered. Asphalt Distributors, Accessories and Attachments.

Total: 10%

Item Attributes

1. State Name of Manufacturer Catalog or Product Price list Proposed with Discount Percentage

NOTE: Do not reference SKU, Reference Numbers, Websites, and/or "See Attached/Enclosed".

Liebherr Used Pricelist

Alternate 5

Section III: Construction, Road, Bridge, and Repair Equipment (Pre-Owned/Reconditioned/Retired Rental)- PURCHASE ONLY

Discount (%) off catalog/price list for **All Types of Pre-Owned/Reconditioned/Retired Rental Construction, Road, Bridge, Other Equipment, Accessories and Attachments.** Catalog/Price list MUST be included or proposal will not be considered. Asphalt Distributors, Accessories and Attachments.

Total: 10%

Item Attributes

1. State Name of Manufacturer Catalog or Product Price list Proposed with Discount Percentage

NOTE: Do not reference SKU, Reference Numbers, Websites, and/or "See Attached/Enclosed".

Link-Belt Used Pricelist

Alternate 6

Section III: Construction, Road, Bridge, and Repair Equipment (Pre-Owned/Reconditioned/Retired Rental)- PURCHASE ONLY

Discount (%) off catalog/price list for **All Types of Pre-Owned/Reconditioned/Retired Rental Construction, Road, Bridge, Other Equipment, Accessories and Attachments.** Catalog/Price list MUST be included or proposal will not be considered. Asphalt Distributors, Accessories and Attachments.

Total: 10%

Item Attributes

1. State Name of Manufacturer Catalog or Product Price list Proposed with Discount Percentage

NOTE: Do not reference SKU, Reference Numbers, Websites, and/or "See Attached/Enclosed".

Takeuchi Used Pricelist

Alternate 7

Section III: Construction, Road, Bridge, and Repair Equipment (Pre-Owned/Reconditioned/Retired Rental)- PURCHASE ONLY

Discount (%) off catalog/price list for **All Types of Pre-Owned/Reconditioned/Retired Rental Construction, Road, Bridge, Other Equipment, Accessories and Attachments.** Catalog/Price list MUST be included or proposal will not be considered. Asphalt Distributors, Accessories and Attachments.

Total: 10%

Item Attributes

1. State Name of Manufacturer Catalog or Product Price list Proposed with Discount Percentage

NOTE: Do not reference SKU, Reference Numbers, Websites, and/or "See Attached/Enclosed".

Wirtgen Used Pricelist

52

Section IV: Street Sweepers, Sand/Salt Spreading, Snowplows and Deicing Road and Bridge Equipment- PURCHASE ONLY

Discount (%) off catalog/price list for **Broom Street Sweepers, Accessories and Attachments.** Catalog/Price list MUST be included or proposal will not be considered. Asphalt Distributors, Accessories and Attachments.

No Bid

Item Notes: **PROPOSAL NOTE 1:** Vendors shall submit catalog(s)/price list(s) with their Proposal response or the Proposal will not be considered. Vendors shall submit catalog(s)/price list(s) with the Proposal in a readily available and readable electronic format, with Excel or searchable PDF preferred. **No paper catalogs or manufacturer/vendor websites will be accepted.**

PROPOSAL NOTE 2: A Vendor proposing shall be approved and authorized by the manufacturer to sell, install, and service the brand(s) of product(s) proposed. Proposers responding to this Proposal Invitation shall submit an approval letter from each manufacturer for each product line proposed. The requirement to provide an approval letter from the manufacturer applies to both seller and installers. Manufacturers responding directly to this Proposal Invitation, in lieu of an authorization letter, shall submit a written explanation that the company is the manufacturer of the product line(s) proposed. Dealer authorization agreements will not be accepted as a substitute for the manufacturer authorization letter.

The manufacturer authorization letters must include the following:
1. Composed on manufacturer letterhead (an email message is not a substitute for the letter),
2. Addressed to “The Local Government Purchasing Cooperative”,
3. Dated within the current calendar year,
4. List the regions in Texas and states that Vendor is authorized to sell, install, and service product(s) proposed, and
5. Name, Title, and Signature of Authorized Official from Manufacturer.

PROPOSAL NOTE 3: **"Pre-Owned/Reconditioned/Retired Rental"** shall be defined as equipment having been checked and inspected by a manufacturer-authorized dealer prior to sale and shall be no older than sixty (60) months as of the date of delivery. Proposers responding to this Proposal Invitation for **"Pre-Owned/Reconditioned/Retired Rental"** equipment must also be approved by the manufacturer to sell pre-owned/reconditioned/retired rental equipment for the brand submitted and must submit an approval letter from each manufacturer with the Proposal. Manufacturer authorization letters must include the regions in which equipment can be sold. Equipment listed as **"Pre-Owned/Reconditioned/Retired Rental"** shall be in good and working condition and shall include a minimum warranty of one-hundred eighty (180) days against any defect from workmanship and parts and shall cover equipment repairs and/or component replacement. Total equipment usage hours as displayed on the service meter will have a maximum of one thousand (1,000) hours per year of age and a minimum of seventy-five percent (75%) of wear remaining for tires, track, and/or ground engagement tools.

Vendors proposing multiple manufacturer product lines and/or catalog/price list per line item must submit the information as follows or proposal may not be considered:

- Select **"Add Alternate"** for each additional manufacturer product line and/or catalog/price list proposed
- Vendor’s must list one specific percentage discount for each manufacturer and/or catalog/price list listed

Item Attributes

1. State Name of Manufacturer Catalog or Product Price list Proposed with Discount Percentage

NOTE: Do not reference SKU, Reference Numbers, Websites, and/or "See Attached/Enclosed".

No response

53

Section IV: Street Sweepers, Sand/Salt Spreading, Snowplows and Deicing Road and Bridge Equipment- PURCHASE ONLY

Discount (%) off catalog/price list for **Air Street Sweepers, Accessories and Attachments.** Catalog/Price list MUST be included or proposal will not be considered. Asphalt Distributors, Accessories and Attachments.

No Bid

Item Notes: **PROPOSAL NOTE 1:** Vendors shall submit catalog(s)/price list(s) with their Proposal response or the Proposal will not be considered. Vendors shall submit catalog(s)/price list(s) with the Proposal in a readily available and readable electronic format, with Excel or searchable PDF preferred. **No paper catalogs or manufacturer/vendor websites will be accepted.**

PROPOSAL NOTE 2: A Vendor proposing shall be approved and authorized by the manufacturer to sell, install, and service the brand(s) of product(s) proposed. Proposers responding to this Proposal Invitation shall submit an approval letter from each manufacturer for each product line proposed. The requirement to provide an approval letter from the manufacturer applies to both seller and installers. Manufacturers responding directly to this Proposal Invitation, in lieu of an authorization letter, shall submit a written explanation that the company is the manufacturer of the product line(s) proposed. Dealer authorization agreements will not be accepted as a substitute for the manufacturer authorization letter.

The manufacturer authorization letters must include the following:
1. Composed on manufacturer letterhead (an email message is not a substitute for the letter),
2. Addressed to “The Local Government Purchasing Cooperative”,
3. Dated within the current calendar year,
4. List the regions in Texas and states that Vendor is authorized to sell, install, and service product(s) proposed, and
5. Name, Title, and Signature of Authorized Official from Manufacturer.

PROPOSAL NOTE 3: **"Pre-Owned/Reconditioned/Retired Rental"** shall be defined as equipment having been checked and inspected by a manufacturer-authorized dealer prior to sale and shall be no older than sixty (60) months as of the date of delivery. Proposers responding to this Proposal Invitation for **"Pre-Owned/Reconditioned/Retired Rental"** equipment must also be approved by the manufacturer to sell pre-owned/reconditioned/retired rental equipment for the brand submitted and must submit an approval letter from each manufacturer with the Proposal. Manufacturer authorization letters must include the regions in which equipment can be sold. Equipment listed as **"Pre-Owned/Reconditioned/Retired Rental"** shall be in good and working condition and shall include a minimum warranty of one-hundred eighty (180) days against any defect from workmanship and parts and shall cover equipment repairs and/or component replacement. Total equipment usage hours as displayed on the service meter will have a maximum of one thousand (1,000) hours per year of age and a minimum of seventy-five percent (75%) of wear remaining for tires, track, and/or ground engagement tools.

Vendors proposing multiple manufacturer product lines and/or catalog/price list per line item must submit the information as follows or proposal may not be considered:

- Select **"Add Alternate"** for each additional manufacturer product line and/or catalog/price list proposed
- Vendor’s must list one specific percentage discount for each manufacturer and/or catalog/price list listed

Item Attributes

1. State Name of Manufacturer Catalog or Product Price list Proposed with Discount Percentage

NOTE: Do not reference SKU, Reference Numbers, Websites, and/or "See Attached/Enclosed".

No response

54

Section IV: Street Sweepers, Sand/Salt Spreading, Snowplows and Deicing Road and Bridge Equipment- PURCHASE ONLY

Discount (%) off catalog/price list for **Regenerative Air Street Sweepers, Accessories and Attachments.** Catalog/Price list MUST be included or proposal will not be considered. Asphalt Distributors, Accessories and Attachments.

No Bid

Item Notes: **PROPOSAL NOTE 1:** Vendors shall submit catalog(s)/price list(s) with their Proposal response or the Proposal will not be considered. Vendors shall submit catalog(s)/price list(s) with the Proposal in a readily available and readable electronic format, with Excel or searchable PDF preferred. **No paper catalogs or manufacturer/vendor websites will be accepted.**

PROPOSAL NOTE 2: A Vendor proposing shall be approved and authorized by the manufacturer to sell, install, and service the brand(s) of product(s) proposed. Proposers responding to this Proposal Invitation shall submit an approval letter from each manufacturer for each product line proposed. The requirement to provide an approval letter from the manufacturer applies to both seller and installers. Manufacturers responding directly to this Proposal Invitation, in lieu of an authorization letter, shall submit a written explanation that the company is the manufacturer of the product line(s) proposed. Dealer authorization agreements will not be accepted as a substitute for the manufacturer authorization letter.

The manufacturer authorization letters must include the following:
1. Composed on manufacturer letterhead (an email message is not a substitute for the letter),
2. Addressed to “The Local Government Purchasing Cooperative”,
3. Dated within the current calendar year,
4. List the regions in Texas and states that Vendor is authorized to sell, install, and service product(s) proposed, and
5. Name, Title, and Signature of Authorized Official from Manufacturer.

PROPOSAL NOTE 3: **"Pre-Owned/Reconditioned/Retired Rental"** shall be defined as equipment having been checked and inspected by a manufacturer-authorized dealer prior to sale and shall be no older than sixty (60) months as of the date of delivery. Proposers responding to this Proposal Invitation for **"Pre-Owned/Reconditioned/Retired Rental"** equipment must also be approved by the manufacturer to sell pre-owned/reconditioned/retired rental equipment for the brand submitted and must submit an approval letter from each manufacturer with the Proposal. Manufacturer authorization letters must include the regions in which equipment can be sold. Equipment listed as **"Pre-Owned/Reconditioned/Retired Rental"** shall be in good and working condition and shall include a minimum warranty of one-hundred eighty (180) days against any defect from workmanship and parts and shall cover equipment repairs and/or component replacement. Total equipment usage hours as displayed on the service meter will have a maximum of one thousand (1,000) hours per year of age and a minimum of seventy-five percent (75%) of wear remaining for tires, track, and/or ground engagement tools.

Vendors proposing multiple manufacturer product lines and/or catalog/price list per line item must submit the information as follows or proposal may not be considered:

- Select **"Add Alternate"** for each additional manufacturer product line and/or catalog/price list proposed
- Vendor’s must list one specific percentage discount for each manufacturer and/or catalog/price list listed

Item Attributes

1. State Name of Manufacturer Catalog or Product Price list Proposed with Discount Percentage

NOTE: Do not reference SKU, Reference Numbers, Websites, and/or "See Attached/Enclosed".

No response

55

Section IV: Street Sweepers, Sand/Salt Spreading, Snowplows and Deicing Road and Bridge Equipment- PURCHASE ONLY

Discount (%) off catalog/price list for **Waterless Street Sweepers, Accessories and Attachments.** Catalog/Price list MUST be included or proposal will not be considered. Asphalt Distributors, Accessories and Attachments.

No Bid

Item Notes: **PROPOSAL NOTE 1:** Vendors shall submit catalog(s)/price list(s) with their Proposal response or the Proposal will not be considered. Vendors shall submit catalog(s)/price list(s) with the Proposal in a readily available and readable electronic format, with Excel or searchable PDF preferred. **No paper catalogs or manufacturer/vendor websites will be accepted.**

PROPOSAL NOTE 2: A Vendor proposing shall be approved and authorized by the manufacturer to sell, install, and service the brand(s) of product(s) proposed. Proposers responding to this Proposal Invitation shall submit an approval letter from each manufacturer for each product line proposed. The requirement to provide an approval letter from the manufacturer applies to both seller and installers. Manufacturers responding directly to this Proposal Invitation, in lieu of an authorization letter, shall submit a written explanation that the company is the manufacturer of the product line(s) proposed. Dealer authorization agreements will not be accepted as a substitute for the manufacturer authorization letter.

The manufacturer authorization letters must include the following:
1. Composed on manufacturer letterhead (an email message is not a substitute for the letter),
2. Addressed to “The Local Government Purchasing Cooperative”,
3. Dated within the current calendar year,
4. List the regions in Texas and states that Vendor is authorized to sell, install, and service product(s) proposed, and
5. Name, Title, and Signature of Authorized Official from Manufacturer.

PROPOSAL NOTE 3: **"Pre-Owned/Reconditioned/Retired Rental"** shall be defined as equipment having been checked and inspected by a manufacturer-authorized dealer prior to sale and shall be no older than sixty (60) months as of the date of delivery. Proposers responding to this Proposal Invitation for **"Pre-Owned/Reconditioned/Retired Rental"** equipment must also be approved by the manufacturer to sell pre-owned/reconditioned/retired rental equipment for the brand submitted and must submit an approval letter from each manufacturer with the Proposal. Manufacturer authorization letters must include the regions in which equipment can be sold. Equipment listed as **"Pre-Owned/Reconditioned/Retired Rental"** shall be in good and working condition and shall include a minimum warranty of one-hundred eighty (180) days against any defect from workmanship and parts and shall cover equipment repairs and/or component replacement. Total equipment usage hours as displayed on the service meter will have a maximum of one thousand (1,000) hours per year of age and a minimum of seventy-five percent (75%) of wear remaining for tires, track, and/or ground engagement tools.

Vendors proposing multiple manufacturer product lines and/or catalog/price list per line item must submit the information as follows or proposal may not be considered:

- Select **"Add Alternate"** for each additional manufacturer product line and/or catalog/price list proposed
- Vendor’s must list one specific percentage discount for each manufacturer and/or catalog/price list listed

Item Attributes

1. State Name of Manufacturer Catalog or Product Price list Proposed with Discount Percentage

NOTE: Do not reference SKU, Reference Numbers, Websites, and/or "See Attached/Enclosed".

No response

56

Section IV: Street Sweepers, Sand/Salt Spreading, Snowplows and Deicing Road and Bridge Equipment- PURCHASE ONLY

Discount (%) off catalog/price list for **Alternative Fuel Street Sweepers, Accessories and Attachments.** Catalog/Price list MUST be included or proposal will not be considered. Asphalt Distributors, Accessories and Attachments.

No Bid

Item Notes: **PROPOSAL NOTE 1:** Vendors shall submit catalog(s)/price list(s) with their Proposal response or the Proposal will not be considered. Vendors shall submit catalog(s)/price list(s) with the Proposal in a readily available and readable electronic format, with Excel or searchable PDF preferred. **No paper catalogs or manufacturer/vendor websites will be accepted.**

PROPOSAL NOTE 2: A Vendor proposing shall be approved and authorized by the manufacturer to sell, install, and service the brand(s) of product(s) proposed. Proposers responding to this Proposal Invitation shall submit an approval letter from each manufacturer for each product line proposed. The requirement to provide an approval letter from the manufacturer applies to both seller and installers. Manufacturers responding directly to this Proposal Invitation, in lieu of an authorization letter, shall submit a written explanation that the company is the manufacturer of the product line(s) proposed. Dealer authorization agreements will not be accepted as a substitute for the manufacturer authorization letter.

The manufacturer authorization letters must include the following:
1. Composed on manufacturer letterhead (an email message is not a substitute for the letter),
2. Addressed to “The Local Government Purchasing Cooperative”,
3. Dated within the current calendar year,
4. List the regions in Texas and states that Vendor is authorized to sell, install, and service product(s) proposed, and
5. Name, Title, and Signature of Authorized Official from Manufacturer.

PROPOSAL NOTE 3: **"Pre-Owned/Reconditioned/Retired Rental"** shall be defined as equipment having been checked and inspected by a manufacturer-authorized dealer prior to sale and shall be no older than sixty (60) months as of the date of delivery. Proposers responding to this Proposal Invitation for **"Pre-Owned/Reconditioned/Retired Rental"** equipment must also be approved by the manufacturer to sell pre-owned/reconditioned/retired rental equipment for the brand submitted and must submit an approval letter from each manufacturer with the Proposal. Manufacturer authorization letters must include the regions in which equipment can be sold. Equipment listed as **"Pre-Owned/Reconditioned/Retired Rental"** shall be in good and working condition and shall include a minimum warranty of one-hundred eighty (180) days against any defect from workmanship and parts and shall cover equipment repairs and/or component replacement. Total equipment usage hours as displayed on the service meter will have a maximum of one thousand (1,000) hours per year of age and a minimum of seventy-five percent (75%) of wear remaining for tires, track, and/or ground engagement tools.

Vendors proposing multiple manufacturer product lines and/or catalog/price list per line item must submit the information as follows or proposal may not be considered:

- Select **"Add Alternate"** for each additional manufacturer product line and/or catalog/price list proposed
- Vendor’s must list one specific percentage discount for each manufacturer and/or catalog/price list listed

Item Attributes

1. State Name of Manufacturer Catalog or Product Price list Proposed with Discount Percentage

NOTE: Do not reference SKU, Reference Numbers, Websites, and/or "See Attached/Enclosed".

No response

57

Section IV: Street Sweepers, Sand/Salt Spreading, Snowplows and Deicing Road and Bridge Equipment- PURCHASE ONLY

Discount (%) off catalog/price list for **All Types of Mounted Sand and Salt Spreading Equipment, Accessories and Attachments** (Pick-Up, Utility, Heavy-Duty, or Tailgate). Catalog/Price list MUST be included or proposal will not be considered. Asphalt Distributors, Accessories and Attachments.

No Bid

Item Notes: **PROPOSAL NOTE 1:** Vendors shall submit catalog(s)/price list(s) with their Proposal response or the Proposal will not be considered. Vendors shall submit catalog(s)/price list(s) with the Proposal in a readily available and readable electronic format, with Excel or searchable PDF preferred. **No paper catalogs or manufacturer/vendor websites will be accepted.**

PROPOSAL NOTE 2: A Vendor proposing shall be approved and authorized by the manufacturer to sell, install, and service the brand(s) of product(s) proposed. Proposers responding to this Proposal Invitation shall submit an approval letter from each manufacturer for each product line proposed. The requirement to provide an approval letter from the manufacturer applies to both seller and installers. Manufacturers responding directly to this Proposal Invitation, in lieu of an authorization letter, shall submit a written explanation that the company is the manufacturer of the product line(s) proposed. Dealer authorization agreements will not be accepted as a substitute for the manufacturer authorization letter.

The manufacturer authorization letters must include the following:
1. Composed on manufacturer letterhead (an email message is not a substitute for the letter),
2. Addressed to “The Local Government Purchasing Cooperative”,
3. Dated within the current calendar year,
4. List the regions in Texas and states that Vendor is authorized to sell, install, and service product(s) proposed, and
5. Name, Title, and Signature of Authorized Official from Manufacturer.

PROPOSAL NOTE 3: **"Pre-Owned/Reconditioned/Retired Rental"** shall be defined as equipment having been checked and inspected by a manufacturer-authorized dealer prior to sale and shall be no older than sixty (60) months as of the date of delivery. Proposers responding to this Proposal Invitation for **"Pre-Owned/Reconditioned/Retired Rental"** equipment must also be approved by the manufacturer to sell pre-owned/reconditioned/retired rental equipment for the brand submitted and must submit an approval letter from each manufacturer with the Proposal. Manufacturer authorization letters must include the regions in which equipment can be sold. Equipment listed as **"Pre-Owned/Reconditioned/Retired Rental"** shall be in good and working condition and shall include a minimum warranty of one-hundred eighty (180) days against any defect from workmanship and parts and shall cover equipment repairs and/or component replacement. Total equipment usage hours as displayed on the service meter will have a maximum of one thousand (1,000) hours per year of age and a minimum of seventy-five percent (75%) of wear remaining for tires, track, and/or ground engagement tools.

Vendors proposing multiple manufacturer product lines and/or catalog/price list per line item must submit the information as follows or proposal may not be considered:

- Select **"Add Alternate"** for each additional manufacturer product line and/or catalog/price list proposed
- Vendor’s must list one specific percentage discount for each manufacturer and/or catalog/price list listed

Item Attributes

1. State Name of Manufacturer Catalog or Product Price list Proposed with Discount Percentage

NOTE: Do not reference SKU, Reference Numbers, Websites, and/or "See Attached/Enclosed".

No response

58

Section IV: Street Sweepers, Sand/Salt Spreading, Snowplows and Deicing Road and Bridge Equipment- PURCHASE ONLY

Discount (%) off catalog/price list for **Pre-Wetting Equipment, Accessories and Attachments.** Catalog/Price list MUST be included or proposal will not be considered. Asphalt Distributors, Accessories and Attachments.

No Bid

Item Notes: **PROPOSAL NOTE 1:** Vendors shall submit catalog(s)/price list(s) with their Proposal response or the Proposal will not be considered. Vendors shall submit catalog(s)/price list(s) with the Proposal in a readily available and readable electronic format, with Excel or searchable PDF preferred. **No paper catalogs or manufacturer/vendor websites will be accepted.**

PROPOSAL NOTE 2: A Vendor proposing shall be approved and authorized by the manufacturer to sell, install, and service the brand(s) of product(s) proposed. Proposers responding to this Proposal Invitation shall submit an approval letter from each manufacturer for each product line proposed. The requirement to provide an approval letter from the manufacturer applies to both seller and installers. Manufacturers responding directly to this Proposal Invitation, in lieu of an authorization letter, shall submit a written explanation that the company is the manufacturer of the product line(s) proposed. Dealer authorization agreements will not be accepted as a substitute for the manufacturer authorization letter.

The manufacturer authorization letters must include the following:
1. Composed on manufacturer letterhead (an email message is not a substitute for the letter),
2. Addressed to “The Local Government Purchasing Cooperative”,
3. Dated within the current calendar year,
4. List the regions in Texas and states that Vendor is authorized to sell, install, and service product(s) proposed, and
5. Name, Title, and Signature of Authorized Official from Manufacturer.

PROPOSAL NOTE 3: **"Pre-Owned/Reconditioned/Retired Rental"** shall be defined as equipment having been checked and inspected by a manufacturer-authorized dealer prior to sale and shall be no older than sixty (60) months as of the date of delivery. Proposers responding to this Proposal Invitation for **"Pre-Owned/Reconditioned/Retired Rental"** equipment must also be approved by the manufacturer to sell pre-owned/reconditioned/retired rental equipment for the brand submitted and must submit an approval letter from each manufacturer with the Proposal. Manufacturer authorization letters must include the regions in which equipment can be sold. Equipment listed as **"Pre-Owned/Reconditioned/Retired Rental"** shall be in good and working condition and shall include a minimum warranty of one-hundred eighty (180) days against any defect from workmanship and parts and shall cover equipment repairs and/or component replacement. Total equipment usage hours as displayed on the service meter will have a maximum of one thousand (1,000) hours per year of age and a minimum of seventy-five percent (75%) of wear remaining for tires, track, and/or ground engagement tools.

Vendors proposing multiple manufacturer product lines and/or catalog/price list per line item must submit the information as follows or proposal may not be considered:

- Select **"Add Alternate"** for each additional manufacturer product line and/or catalog/price list proposed
- Vendor’s must list one specific percentage discount for each manufacturer and/or catalog/price list listed

Item Attributes

1. State Name of Manufacturer Catalog or Product Price list Proposed with Discount Percentage

NOTE: Do not reference SKU, Reference Numbers, Websites, and/or "See Attached/Enclosed".

No response

59

Section IV: Street Sweepers, Sand/Salt Spreading, Snowplows and Deicing Road and Bridge Equipment- PURCHASE ONLY

Discount (%) off catalog/price list for **Snowplow Equipment, Accessories and Attachments.** Catalog/Price list MUST be included or proposal will not be considered. Asphalt Distributors, Accessories and Attachments.

No Bid

Item Notes: **PROPOSAL NOTE 1:** Vendors shall submit catalog(s)/price list(s) with their Proposal response or the Proposal will not be considered. Vendors shall submit catalog(s)/price list(s) with the Proposal in a readily available and readable electronic format, with Excel or searchable PDF preferred. **No paper catalogs or manufacturer/vendor websites will be accepted.**

PROPOSAL NOTE 2: A Vendor proposing shall be approved and authorized by the manufacturer to sell, install, and service the brand(s) of product(s) proposed. Proposers responding to this Proposal Invitation shall submit an approval letter from each manufacturer for each product line proposed. The requirement to provide an approval letter from the manufacturer applies to both seller and installers. Manufacturers responding directly to this Proposal Invitation, in lieu of an authorization letter, shall submit a written explanation that the company is the manufacturer of the product line(s) proposed. Dealer authorization agreements will not be accepted as a substitute for the manufacturer authorization letter.

The manufacturer authorization letters must include the following:
1. Composed on manufacturer letterhead (an email message is not a substitute for the letter),
2. Addressed to “The Local Government Purchasing Cooperative”,
3. Dated within the current calendar year,
4. List the regions in Texas and states that Vendor is authorized to sell, install, and service product(s) proposed, and
5. Name, Title, and Signature of Authorized Official from Manufacturer.

PROPOSAL NOTE 3: **"Pre-Owned/Reconditioned/Retired Rental"** shall be defined as equipment having been checked and inspected by a manufacturer-authorized dealer prior to sale and shall be no older than sixty (60) months as of the date of delivery. Proposers responding to this Proposal Invitation for **"Pre-Owned/Reconditioned/Retired Rental"** equipment must also be approved by the manufacturer to sell pre-owned/reconditioned/retired rental equipment for the brand submitted and must submit an approval letter from each manufacturer with the Proposal. Manufacturer authorization letters must include the regions in which equipment can be sold. Equipment listed as **"Pre-Owned/Reconditioned/Retired Rental"** shall be in good and working condition and shall include a minimum warranty of one-hundred eighty (180) days against any defect from workmanship and parts and shall cover equipment repairs and/or component replacement. Total equipment usage hours as displayed on the service meter will have a maximum of one thousand (1,000) hours per year of age and a minimum of seventy-five percent (75%) of wear remaining for tires, track, and/or ground engagement tools.

Vendors proposing multiple manufacturer product lines and/or catalog/price list per line item must submit the information as follows or proposal may not be considered:

- Select **"Add Alternate"** for each additional manufacturer product line and/or catalog/price list proposed
- Vendor’s must list one specific percentage discount for each manufacturer and/or catalog/price list listed

Item Attributes

1. State Name of Manufacturer Catalog or Product Price list Proposed with Discount Percentage

NOTE: Do not reference SKU, Reference Numbers, Websites, and/or "See Attached/Enclosed".

No response

60

Section IV: Street Sweepers, Sand/Salt Spreading, Snowplows and Deicing Road and Bridge Equipment- PURCHASE ONLY

Discount (%) off catalog/price list for **Deicing Equipment, Accessories and Attachments.** Catalog/Price list MUST be included or proposal will not be considered. Asphalt Distributors, Accessories and Attachments.

No Bid

Item Notes: **PROPOSAL NOTE 1:** Vendors shall submit catalog(s)/price list(s) with their Proposal response or the Proposal will not be considered. Vendors shall submit catalog(s)/price list(s) with the Proposal in a readily available and readable electronic format, with Excel or searchable PDF preferred. **No paper catalogs or manufacturer/vendor websites will be accepted.**

PROPOSAL NOTE 2: A Vendor proposing shall be approved and authorized by the manufacturer to sell, install, and service the brand(s) of product(s) proposed. Proposers responding to this Proposal Invitation shall submit an approval letter from each manufacturer for each product line proposed. The requirement to provide an approval letter from the manufacturer applies to both seller and installers. Manufacturers responding directly to this Proposal Invitation, in lieu of an authorization letter, shall submit a written explanation that the company is the manufacturer of the product line(s) proposed. Dealer authorization agreements will not be accepted as a substitute for the manufacturer authorization letter.

The manufacturer authorization letters must include the following:
1. Composed on manufacturer letterhead (an email message is not a substitute for the letter),
2. Addressed to “The Local Government Purchasing Cooperative”,
3. Dated within the current calendar year,
4. List the regions in Texas and states that Vendor is authorized to sell, install, and service product(s) proposed, and
5. Name, Title, and Signature of Authorized Official from Manufacturer.

PROPOSAL NOTE 3: **"Pre-Owned/Reconditioned/Retired Rental"** shall be defined as equipment having been checked and inspected by a manufacturer-authorized dealer prior to sale and shall be no older than sixty (60) months as of the date of delivery. Proposers responding to this Proposal Invitation for **"Pre-Owned/Reconditioned/Retired Rental"** equipment must also be approved by the manufacturer to sell pre-owned/reconditioned/retired rental equipment for the brand submitted and must submit an approval letter from each manufacturer with the Proposal. Manufacturer authorization letters must include the regions in which equipment can be sold. Equipment listed as **"Pre-Owned/Reconditioned/Retired Rental"** shall be in good and working condition and shall include a minimum warranty of one-hundred eighty (180) days against any defect from workmanship and parts and shall cover equipment repairs and/or component replacement. Total equipment usage hours as displayed on the service meter will have a maximum of one thousand (1,000) hours per year of age and a minimum of seventy-five percent (75%) of wear remaining for tires, track, and/or ground engagement tools.

Vendors proposing multiple manufacturer product lines and/or catalog/price list per line item must submit the information as follows or proposal may not be considered:

- Select **"Add Alternate"** for each additional manufacturer product line and/or catalog/price list proposed
- Vendor’s must list one specific percentage discount for each manufacturer and/or catalog/price list listed

Item Attributes

1. State Name of Manufacturer Catalog or Product Price list Proposed with Discount Percentage

NOTE: Do not reference SKU, Reference Numbers, Websites, and/or "See Attached/Enclosed".

No response

61

Section IV: Street Sweepers, Sand/Salt Spreading, Snowplows and Deicing Road and Bridge Equipment- PURCHASE ONLY

Discount (%) off catalog/price list for **All Other Types of Street Sweeper, Sand/Salt Spreading, Snowplows and Deicing Equipment, Accessories and Attachments.** Catalog/Price list MUST be included or proposal will not be considered. Asphalt Distributors, Accessories and Attachments.

No Bid

Item Notes: **PROPOSAL NOTE 1:** Vendors shall submit catalog(s)/price list(s) with their Proposal response or the Proposal will not be considered. Vendors shall submit catalog(s)/price list(s) with the Proposal in a readily available and readable electronic format, with Excel or searchable PDF preferred. **No paper catalogs or manufacturer/vendor websites will be accepted.**

PROPOSAL NOTE 2: A Vendor proposing shall be approved and authorized by the manufacturer to sell, install, and service the brand(s) of product(s) proposed. Proposers responding to this Proposal Invitation shall submit an approval letter from each manufacturer for each product line proposed. The requirement to provide an approval letter from the manufacturer applies to both seller and installers. Manufacturers responding directly to this Proposal Invitation, in lieu of an authorization letter, shall submit a written explanation that the company is the manufacturer of the product line(s) proposed. Dealer authorization agreements will not be accepted as a substitute for the manufacturer authorization letter.

The manufacturer authorization letters must include the following:
1. Composed on manufacturer letterhead (an email message is not a substitute for the letter),
2. Addressed to “The Local Government Purchasing Cooperative”,
3. Dated within the current calendar year,
4. List the regions in Texas and states that Vendor is authorized to sell, install, and service product(s) proposed, and
5. Name, Title, and Signature of Authorized Official from Manufacturer.

PROPOSAL NOTE 3: **"Pre-Owned/Reconditioned/Retired Rental"** shall be defined as equipment having been checked and inspected by a manufacturer-authorized dealer prior to sale and shall be no older than sixty (60) months as of the date of delivery. Proposers responding to this Proposal Invitation for **"Pre-Owned/Reconditioned/Retired Rental"** equipment must also be approved by the manufacturer to sell pre-owned/reconditioned/retired rental equipment for the brand submitted and must submit an approval letter from each manufacturer with the Proposal. Manufacturer authorization letters must include the regions in which equipment can be sold. Equipment listed as **"Pre-Owned/Reconditioned/Retired Rental"** shall be in good and working condition and shall include a minimum warranty of one-hundred eighty (180) days against any defect from workmanship and parts and shall cover equipment repairs and/or component replacement. Total equipment usage hours as displayed on the service meter will have a maximum of one thousand (1,000) hours per year of age and a minimum of seventy-five percent (75%) of wear remaining for tires, track, and/or ground engagement tools.

Vendors proposing multiple manufacturer product lines and/or catalog/price list per line item must submit the information as follows or proposal may not be considered:

- Select **"Add Alternate"** for each additional manufacturer product line and/or catalog/price list proposed
- Vendor’s must list one specific percentage discount for each manufacturer and/or catalog/price list listed

Item Attributes

1. State Name of Manufacturer Catalog or Product Price list Proposed with Discount Percentage

NOTE: Do not reference SKU, Reference Numbers, Websites, and/or "See Attached/Enclosed".

No response

62

Section IV: Street Sweepers, Sand/Salt Spreading, Snowplows and Deicing Road and Bridge Equipment- PURCHASE ONLY

Discount (%) off catalog/price list for **Repair Parts on All Types of Street Sweepers, Sand/Salt Spreading, Snowplows, Deicing, and Other Related Equipment, Accessories and Attachments.** Catalog/Price list MUST be included or proposal will not be considered. Asphalt Distributors, Accessories and Attachments.

No Bid

Item Notes: **PROPOSAL NOTE 1:** Vendors shall submit catalog(s)/price list(s) with their Proposal response or the Proposal will not be considered. Vendors shall submit catalog(s)/price list(s) with the Proposal in a readily available and readable electronic format, with Excel or searchable PDF preferred. **No paper catalogs or manufacturer/vendor websites will be accepted.**

PROPOSAL NOTE 2: A Vendor proposing shall be approved and authorized by the manufacturer to sell, install, and service the brand(s) of product(s) proposed. Proposers responding to this Proposal Invitation shall submit an approval letter from each manufacturer for each product line proposed. The requirement to provide an approval letter from the manufacturer applies to both seller and installers. Manufacturers responding directly to this Proposal Invitation, in lieu of an authorization letter, shall submit a written explanation that the company is the manufacturer of the product line(s) proposed. Dealer authorization agreements will not be accepted as a substitute for the manufacturer authorization letter.

The manufacturer authorization letters must include the following:
1. Composed on manufacturer letterhead (an email message is not a substitute for the letter),
2. Addressed to “The Local Government Purchasing Cooperative”,
3. Dated within the current calendar year,
4. List the regions in Texas and states that Vendor is authorized to sell, install, and service product(s) proposed, and
5. Name, Title, and Signature of Authorized Official from Manufacturer.

PROPOSAL NOTE 3: **"Pre-Owned/Reconditioned/Retired Rental"** shall be defined as equipment having been checked and inspected by a manufacturer-authorized dealer prior to sale and shall be no older than sixty (60) months as of the date of delivery. Proposers responding to this Proposal Invitation for **"Pre-Owned/Reconditioned/Retired Rental"** equipment must also be approved by the manufacturer to sell pre-owned/reconditioned/retired rental equipment for the brand submitted and must submit an approval letter from each manufacturer with the Proposal. Manufacturer authorization letters must include the regions in which equipment can be sold. Equipment listed as **"Pre-Owned/Reconditioned/Retired Rental"** shall be in good and working condition and shall include a minimum warranty of one-hundred eighty (180) days against any defect from workmanship and parts and shall cover equipment repairs and/or component replacement. Total equipment usage hours as displayed on the service meter will have a maximum of one thousand (1,000) hours per year of age and a minimum of seventy-five percent (75%) of wear remaining for tires, track, and/or ground engagement tools.

Vendors proposing multiple manufacturer product lines and/or catalog/price list per line item must submit the information as follows or proposal may not be considered:

- Select **"Add Alternate"** for each additional manufacturer product line and/or catalog/price list proposed
- Vendor’s must list one specific percentage discount for each manufacturer and/or catalog/price list listed

Item Attributes

1. State Name of Manufacturer Catalog or Product Price list Proposed with Discount Percentage

NOTE: Do not reference SKU, Reference Numbers, Websites, and/or "See Attached/Enclosed".

No response

63

Section V: Street Sweepers, Sand/Salt Spreading, Snowplows and Deicing Road and Bridge Equipment-RENTAL ONLY (Rental Rate Sheet must be submitted with Proposal or Proposal will not be considered.)

Discount (%) off catalog/price list for **RENTAL of All Street Sweepers, Sand/Salt Spreading, Snowplows and Deicing Road and Bridge Equipment, Accessories and Attachments.** Catalog/Price list MUST be included or proposal will not be considered. Asphalt Distributors, Accessories and Attachments.

No Bid

Item Notes: **PROPOSAL NOTE 1:** Vendors shall submit catalog(s)/price list(s) with their Proposal response or the Proposal will not be considered. Vendors shall submit catalog(s)/price list(s) with the Proposal in a readily available and readable electronic format, with Excel or searchable PDF preferred. **No paper catalogs or manufacturer/vendor websites will be accepted.**

PROPOSAL NOTE 2: A Vendor proposing shall be approved and authorized by the manufacturer to sell, install, and service the brand(s) of product(s) proposed. Proposers responding to this Proposal Invitation shall submit an approval letter from each manufacturer for each product line proposed. The requirement to provide an approval letter from the manufacturer applies to both seller and installers. Manufacturers responding directly to this Proposal Invitation, in lieu of an authorization letter, shall submit a written explanation that the company is the manufacturer of the product line(s) proposed. Dealer authorization agreements will not be accepted as a substitute for the manufacturer authorization letter.

The manufacturer authorization letters must include the following:
1. Composed on manufacturer letterhead (an email message is not a substitute for the letter),
2. Addressed to “The Local Government Purchasing Cooperative”,
3. Dated within the current calendar year,
4. List the regions in Texas and states that Vendor is authorized to sell, install, and service product(s) proposed, and
5. Name, Title, and Signature of Authorized Official from Manufacturer.

PROPOSAL NOTE 3: **"Pre-Owned/Reconditioned/Retired Rental"** shall be defined as equipment having been checked and inspected by a manufacturer-authorized dealer prior to sale and shall be no older than sixty (60) months as of the date of delivery. Proposers responding to this Proposal Invitation for **"Pre-Owned/Reconditioned/Retired Rental"** equipment must also be approved by the manufacturer to sell pre-owned/reconditioned/retired rental equipment for the brand submitted and must submit an approval letter from each manufacturer with the Proposal. Manufacturer authorization letters must include the regions in which equipment can be sold. Equipment listed as **"Pre-Owned/Reconditioned/Retired Rental"** shall be in good and working condition and shall include a minimum warranty of one-hundred eighty (180) days against any defect from workmanship and parts and shall cover equipment repairs and/or component replacement. Total equipment usage hours as displayed on the service meter will have a maximum of one thousand (1,000) hours per year of age and a minimum of seventy-five percent (75%) of wear remaining for tires, track, and/or ground engagement tools.

Vendors proposing multiple manufacturer product lines and/or catalog/price list per line item must submit the information as follows or proposal may not be considered:

- Select **"Add Alternate"** for each additional manufacturer product line and/or catalog/price list proposed
- Vendor’s must list one specific percentage discount for each manufacturer and/or catalog/price list listed

Item Attributes

1. State Name of Manufacturer Catalog or Product Price list Proposed with Discount Percentage

NOTE: Do not reference SKU, Reference Numbers, Websites, and/or "See Attached/Enclosed".

No response

64

Section VI: Street Sweepers, Sand/Salt Spreading, Snowplows and Deicing Road and Bridge Equipment (Pre-Owned/Reconditioned/Retired Rental)**-PURCHASE ONLY**

Discount (%) off catalog/price list for **All Types of Pre-Owned/Reconditioned/Retired Rental Street Sweepers, Sand/Salt Spreading, Snowplows and Deicing Road and Bridge Equipment, Accessories and Attachments.** Catalog/Price list MUST be included or proposal will not be considered. Asphalt Distributors, Accessories and Attachments.

No Bid

Item Notes: **PROPOSAL NOTE 1:** Vendors shall submit catalog(s)/price list(s) with their Proposal response or the Proposal will not be considered. Vendors shall submit catalog(s)/price list(s) with the Proposal in a readily available and readable electronic format, with Excel or searchable PDF preferred. **No paper catalogs or manufacturer/vendor websites will be accepted.**

PROPOSAL NOTE 2: A Vendor proposing shall be approved and authorized by the manufacturer to sell, install, and service the brand(s) of product(s) proposed. Proposers responding to this Proposal Invitation shall submit an approval letter from each manufacturer for each product line proposed. The requirement to provide an approval letter from the manufacturer applies to both seller and installers. Manufacturers responding directly to this Proposal Invitation, in lieu of an authorization letter, shall submit a written explanation that the company is the manufacturer of the product line(s) proposed. Dealer authorization agreements will not be accepted as a substitute for the manufacturer authorization letter.

The manufacturer authorization letters must include the following:
1. Composed on manufacturer letterhead (an email message is not a substitute for the letter),
2. Addressed to “The Local Government Purchasing Cooperative”,
3. Dated within the current calendar year,
4. List the regions in Texas and states that Vendor is authorized to sell, install, and service product(s) proposed, and
5. Name, Title, and Signature of Authorized Official from Manufacturer.

PROPOSAL NOTE 3: **"Pre-Owned/Reconditioned/Retired Rental"** shall be defined as equipment having been checked and inspected by a manufacturer-authorized dealer prior to sale and shall be no older than sixty (60) months as of the date of delivery. Proposers responding to this Proposal Invitation for **"Pre-Owned/Reconditioned/Retired Rental"** equipment must also be approved by the manufacturer to sell pre-owned/reconditioned/retired rental equipment for the brand submitted and must submit an approval letter from each manufacturer with the Proposal. Manufacturer authorization letters must include the regions in which equipment can be sold. Equipment listed as **"Pre-Owned/Reconditioned/Retired Rental"** shall be in good and working condition and shall include a minimum warranty of one-hundred eighty (180) days against any defect from workmanship and parts and shall cover equipment repairs and/or component replacement. Total equipment usage hours as displayed on the service meter will have a maximum of one thousand (1,000) hours per year of age and a minimum of seventy-five percent (75%) of wear remaining for tires, track, and/or ground engagement tools.

Vendors proposing multiple manufacturer product lines and/or catalog/price list per line item must submit the information as follows or proposal may not be considered:

- Select **"Add Alternate"** for each additional manufacturer product line and/or catalog/price list proposed
- Vendor’s must list one specific percentage discount for each manufacturer and/or catalog/price list listed

Item Attributes

1. State Name of Manufacturer Catalog or Product Price list Proposed with Discount Percentage

NOTE: Do not reference SKU, Reference Numbers, Websites, and/or "See Attached/Enclosed".

No response

65

Section VII: Soil and Road Chemical Polymers

Discount (%) off catalog/price list for **Chemical Base Polymers and Stabilizer for Soil and Road (used for soil/road to provide a chemical bond joining particles into formation).** Catalog/Price list MUST be included or proposal will not be considered. Asphalt Distributors, Accessories and Attachments.

No Bid

Item Notes: **PROPOSAL NOTE 1:** Vendors shall submit catalog(s)/price list(s) with their Proposal response or the Proposal will not be considered. Vendors shall submit catalog(s)/price list(s) with the Proposal in a readily available and readable electronic format, with Excel or searchable PDF preferred. **No paper catalogs or manufacturer/vendor websites will be accepted.**

PROPOSAL NOTE 2: A Vendor proposing shall be approved and authorized by the manufacturer to sell, install, and service the brand(s) of product(s) proposed. Proposers responding to this Proposal Invitation shall submit an approval letter from each manufacturer for each product line proposed. The requirement to provide an approval letter from the manufacturer applies to both seller and installers. Manufacturers responding directly to this Proposal Invitation, in lieu of an authorization letter, shall submit a written explanation that the company is the manufacturer of the product line(s) proposed. Dealer authorization agreements will not be accepted as a substitute for the manufacturer authorization letter.

The manufacturer authorization letters must include the following:
1. Composed on manufacturer letterhead (an email message is not a substitute for the letter),
2. Addressed to “The Local Government Purchasing Cooperative”,
3. Dated within the current calendar year,
4. List the regions in Texas and states that Vendor is authorized to sell, install, and service product(s) proposed, and
5. Name, Title, and Signature of Authorized Official from Manufacturer.

PROPOSAL NOTE 3: **"Pre-Owned/Reconditioned/Retired Rental"** shall be defined as equipment having been checked and inspected by a manufacturer-authorized dealer prior to sale and shall be no older than sixty (60) months as of the date of delivery. Proposers responding to this Proposal Invitation for **"Pre-Owned/Reconditioned/Retired Rental"** equipment must also be approved by the manufacturer to sell pre-owned/reconditioned/retired rental equipment for the brand submitted and must submit an approval letter from each manufacturer with the Proposal. Manufacturer authorization letters must include the regions in which equipment can be sold. Equipment listed as **"Pre-Owned/Reconditioned/Retired Rental"** shall be in good and working condition and shall include a minimum warranty of one-hundred eighty (180) days against any defect from workmanship and parts and shall cover equipment repairs and/or component replacement. Total equipment usage hours as displayed on the service meter will have a maximum of one thousand (1,000) hours per year of age and a minimum of seventy-five percent (75%) of wear remaining for tires, track, and/or ground engagement tools.

Vendors proposing multiple manufacturer product lines and/or catalog/price list per line item must submit the information as follows or proposal may not be considered:

- Select **"Add Alternate"** for each additional manufacturer product line and/or catalog/price list proposed
- Vendor’s must list one specific percentage discount for each manufacturer and/or catalog/price list listed

Item Attributes

1. State Name of Manufacturer Catalog or Product Price list Proposed with Discount Percentage

NOTE: Do not reference SKU, Reference Numbers, Websites, and/or "See Attached/Enclosed".

No response

66

Section VIII: Installation and Repair Service

Discount (%) off catalog/price list for **Maintenance Services (monthly, quarterly, and/or yearly) of Construction, Road and Bridge, Street Sweepers, Sand/Salt Spreading, Snowplows, Deicing and Other Equipment.** Catalog/Price list MUST be included or proposal will not be considered. Asphalt Distributors, Accessories and Attachments.

No Bid

Item Notes: **PROPOSAL NOTE 1:** Vendors shall submit catalog(s)/price list(s) with their Proposal response or the Proposal will not be considered. Vendors shall submit catalog(s)/price list(s) with the Proposal in a readily available and readable electronic format, with Excel or searchable PDF preferred. **No paper catalogs or manufacturer/vendor websites will be accepted.**

PROPOSAL NOTE 2: A Vendor proposing shall be approved and authorized by the manufacturer to sell, install, and service the brand(s) of product(s) proposed. Proposers responding to this Proposal Invitation shall submit an approval letter from each manufacturer for each product line proposed. The requirement to provide an approval letter from the manufacturer applies to both seller and installers. Manufacturers responding directly to this Proposal Invitation, in lieu of an authorization letter, shall submit a written explanation that the company is the manufacturer of the product line(s) proposed. Dealer authorization agreements will not be accepted as a substitute for the manufacturer authorization letter.

The manufacturer authorization letters must include the following:
1. Composed on manufacturer letterhead (an email message is not a substitute for the letter),
2. Addressed to “The Local Government Purchasing Cooperative”,
3. Dated within the current calendar year,
4. List the regions in Texas and states that Vendor is authorized to sell, install, and service product(s) proposed, and
5. Name, Title, and Signature of Authorized Official from Manufacturer.

PROPOSAL NOTE 3: **"Pre-Owned/Reconditioned/Retired Rental"** shall be defined as equipment having been checked and inspected by a manufacturer-authorized dealer prior to sale and shall be no older than sixty (60) months as of the date of delivery. Proposers responding to this Proposal Invitation for **"Pre-Owned/Reconditioned/Retired Rental"** equipment must also be approved by the manufacturer to sell pre-owned/reconditioned/retired rental equipment for the brand submitted and must submit an approval letter from each manufacturer with the Proposal. Manufacturer authorization letters must include the regions in which equipment can be sold. Equipment listed as **"Pre-Owned/Reconditioned/Retired Rental"** shall be in good and working condition and shall include a minimum warranty of one-hundred eighty (180) days against any defect from workmanship and parts and shall cover equipment repairs and/or component replacement. Total equipment usage hours as displayed on the service meter will have a maximum of one thousand (1,000) hours per year of age and a minimum of seventy-five percent (75%) of wear remaining for tires, track, and/or ground engagement tools.

Vendors proposing multiple manufacturer product lines and/or catalog/price list per line item must submit the information as follows or proposal may not be considered:

- Select **"Add Alternate"** for each additional manufacturer product line and/or catalog/price list proposed
- Vendor’s must list one specific percentage discount for each manufacturer and/or catalog/price list listed

Item Attributes

1. State Name of Manufacturer Catalog or Product Price list Proposed with Discount Percentage

NOTE: Do not reference SKU, Reference Numbers, Websites, and/or "See Attached/Enclosed".

No response

67	**Section VIII: Installation and Repair Service** **Hourly Labor Rate for Installation/Repair Service on All Types of Construction, Road, Bridge and Other Equipment**- **Not to Exceed** hourly labor rate for Installation/Repair Service of Equipment and Products. Quantity: 1 UOM: Hourly Labor Rate Price: $175.00 Total: $175.00
68	**Section VIII: Installation and Repair Service** **Hourly Labor Rate for Installation/Repair Service on All Types of Street Sweepers, Sand/Salt Spreading, Snowplows, Deicing and Other Equipment**- **Not to Exceed** hourly labor rate for Installation/Repair Service of Equipment and Products. Quantity: 1 UOM: Hourly Labor Rate ***No Bid***

Response Total: $175.00

CERTIFICATE OF INTERESTED PARTIES

FORM 1295

Complete Nos. 1 - 4 and 6 if there are interested parties.
Complete Nos. 1, 2, 3, 5, and 6 if there are no interested parties.

OFFICE USE ONLY
CERTIFICATION OF FILING

Certificate Number:
2026-1481102

Date Filed:
06/23/2026

Date Acknowledged:
06/23/2026

1 Name of business entity filing form, and the city, state and country of the business entity's place of business.

NUECES POWER EQUIPMENT
SAN BENITO, TX United States

2 Name of governmental entity or state agency that is a party to the contract for which the form is being filed.

City of Brownsville

3 Provide the identification number used by the governmental entity or state agency to track or identify the contract, and provide a description of the services, goods, or other property to be provided under the contract.

273-26-ISD-CP
COOPERATIVE PURCHASE AGREEMENT SP33 SLIP FORM PAVER

4 Name of Interested Party	City, State, Country (place of business)	Nature of interest (check applicable)	
		Controlling	Intermediary

5 Check only if there is NO Interested Party. [X]

6 UNSWORN DECLARATION

My name is _____, and my date of birth is _____.

My address is _____, _____, _____, _____, _____.
(city) (state) (zip code) (country)

I declare under penalty of perjury that the foregoing is true and correct.

Executed in _____ County, State of _____, on the _____ day of _____, 20_____.
(month) (year)

_____
Signature of authorized agent of contracting business entity
(Declarant)

COOPERATIVE PURCHASE AGREEMENT
273-26-ISD-CP

This Cooperative Purchase Agreement ("Agreement") is entered into by and between Nueces Farm Center, Inc., dba Nueces Power Equipment ("Vendor") and the City of Brownsville ("City"), a Texas home rule municipality.

The Cooperative Purchase Agreement includes the following documents, which shall be construed in the order of precedence in which they are listed:

1. This Cooperative Purchase Agreement.
2. Exhibit A – Quote
3. Exhibit B – BuyBoard Cooperative Contract #788-25
4. Exhibit C – Form 2- Statement of Conflict of Interest
5. Exhibit D – Certificate of Insurance
6. Exhibit E – Form 3- Texas Ethics Commission Certificate of Interested Parties (1295)

Exhibits A, B, C, D, and E, which are attached hereto and incorporated herein, are made a part of this Agreement for all purposes. Vendor agrees to provide City with the services and goods included in Exhibit A pursuant to the terms and conditions of this Cooperative Purchase Agreement, including all exhibits thereto.

City shall pay Vendor in accordance with the fee schedule in Exhibit A and in accordance with the provisions of this Agreement. Total compensation under this Agreement shall not exceed Four Hundred Eighty-Two Thousand Nine Hundred Twenty-Eight Dollars and Twenty-Three Cents ($482,928.23). Vendor shall not provide any additional items or services or bill for expenses incurred for City not specified by this Agreement unless City requests and approves in writing the additional costs for such services. City shall not be liable for any additional expenses of Vendor not specified by this Agreement unless City first approves such expenses in writing.

The term of this Agreement shall commence on approval by the City Commission or designee and shall continue until the Equipment has been delivered, inspected, and accepted by the City. Notwithstanding the foregoing, the parties understand and acknowledge that the Buyboard Cooperative Contract #788-25 the City is relying on for cooperative purchase expires on November 30, 2028, at which time the City's Agreement with Vendor shall also expire.

Vendor agrees that City shall, until the expiration of final payment under this Agreement, or the final conclusion of any audit commenced during the said three years, have access to and the right to examine at reasonable times any directly pertinent books, documents, papers and records, including, but not limited to, all electronic records, of Vendor involving transactions relating to this Agreement at no additional cost to City. Vendor agrees that City shall have access during normal working hours to all necessary Vendor facilities and shall be provided adequate and appropriate workspace in order to conduct audits in compliance with the provisions of this section. City shall give Vendor reasonable advance notice of intended audits.

VENDOR ACKNOWLEDGES THAT CITY IS A GOVERNMENT ENTITY AND AS SUCH CANNOT INDEMNIFY OR HOLD HARMLESS A PARTY WITHOUT FIRST CREATING A SINKING FUND OR LEVYING A TAX. VENDOR FURTHER ACKNOWLEDGES THAT THE CITY HAS NO INTENTION OF CREATING SUCH A SINKING FUND OR LEVYING A TAX. THE PARTIES AGREE THAT ANY PROVISION

CONTAINED WITHIN THE CONTRACT DOCUMENTS REQUIRING THE CITY TO INDEMNIFY OR HOLD HARMLESS THE VENDOR IS HEREBY STRICKEN.

Notices required pursuant to the provisions of this Agreement shall be conclusively determined to have been delivered when (1) hand-delivered to the other party, its agents, employees, servants or representatives, (2) delivered by facsimile with electronic confirmation of the transmission, or (3) received by the other party by United States Mail, registered, return receipt requested, addressed as follows:

To CITY:
City of Brownsville
Attn: City Manager
1001 East Elizabeth Street
Brownsville, Texas 78520

With copy to Brownsville City Attorney's Office at same address.

To VENDOR:
Nueces Farm Center, Inc. dba Nueces Power Equipment

PO BOX 4789
Corpus Christi, Texas 78469

The undersigned represents and warrants that he or she has the power and authority to execute this Agreement and bind the respective parties.

CITY OF BROWNSVILLE:

Signature: _____

Print Name: _____

Title: _____

Date: _____

VENDOR:

Signature: _____

Print Name: BEN HERNANDEZ

Title: SALES MANAGER

Date: 6/19/26

APPROVED AS TO FORM

Alyssa J. Castillon
Assistant City Attorney

Exhibit A

Confidential with Personal Information.

TASB Buyboard

Quotation Worksheet

Date: 6/16/2026

Distributor Name: Nueces Power Equipment
Sales Person:
Phone Number:

Price list date: 12/1/2025

Customer name: City Of Brownsville
Customer Contact:
Customer Email/Phone:

Model Discount: 18.0%
factor 82.0%

Machine Make/Model	Description	Sales Code	Factory List Price	Customer Price
		788-25		$ -
			$476,669.00	$ 390,868.58
SP 33 SLIP FORM PAVER w/ 2' BASIC TRIMMER & 1'6" EXTENSION				$ -
				$ -
				$ -
Factory Options & Attachments				$ -
Additional Set of Technical Docs US			$81.00	$ 66.42
				$ -
Non-Factory Options & Attachments				$ -
QTY 6 STRAIGHT VIBRATORS				$ 9,243.86
1' trimmer head extension				$ 7,690.00
FULLY HYDRAULIC PREMIUM MOLD EXTENSION				$ 13,210.00
BASIC C&G MOLD UP TO 32"				$ 4,932.39
HOPPER FOR C&G MOLD				$ 2,412.00
STRING-LINE KIT				$ 4,252.26
1'6" TRIMMER HEAD EXTENSION FOR TOTAL 6'				$ 8,323.82
4', 5', & 6' VARIABLE SIDEWALK MOLD W/ Removable Plates				$ 19,277.00
				$ -
				$ -
Machine sale Price				$ 460,276.33
Shop Manuals, freight, assembly & training				
Factory Freight				$12,000.00
Local Delivery				$2,500.00
PDI & Training				$7,200.00
		Sub Total		**$ 481,976.33**
Contract ends 11-30-25		**Additional Discount/Trade in**		0
Validity 60 days		**Heavy Equipment Tax**	0.001975	$ 951.90
Delivery 30-180 DAY ARO				
FOB Customers Yard		**Total Sale Price**		$482,928.23

P.O. Box 400, Austin, Texas 78767
800.695.2919 • info@buyboard.com • buyboard.com

Electronic Delivery

Ben Hernandez
Nueces Farm Center, Inc. dba Nueces Power Equipment
5201 US Hwy 59 N
Victoria, TX 77905

Welcome to BuyBoard!

Re: *Notice of The Local Government Purchasing Cooperative Contract Award;* Proposal Invitation No. 788-25, Construction, Road and Bridge, and Other Related Equipment

Congratulations, The Local Government Purchasing Cooperative (Cooperative) has awarded your company a BuyBoard® contract based on the above-referenced Proposal Invitation. The contract is effective for an initial one-year term of December 1, 2025 through November 30, 2026, and may be subject to two possible one-year renewals. Please refer to the Proposal Invitation for the contract documents, including the General Terms and Conditions of the Contract.

To review the items your company has been awarded, please review Proposal Tabulation No. 788-25 at: www.buyboard.com/vendor. Only items marked as awarded to your company are included in this contract award, and only those awarded items may be sold through the BuyBoard contract. All sales must comply with the contract terms and must be at or below the awarded pricing as set forth in the General Terms and Conditions.

A list of Cooperative members is available on the buyboard.com website. In addition, the BuyBoard Administrator's vendor relations staff is available to assist you in locating available BuyBoard informational resources and answering questions you may have as an awarded BuyBoard vendor.

On behalf of the Cooperative, we appreciate your interest in the Cooperative and we are looking forward to your participation in the program. If you have any questions, feel free to contact me at bids@buyboard.com.

Sincerely,

Stacy Finn

Stacy Finn, Bid Analyst
Texas Association of School Boards, Inc.,
Administrator for The Local Government Purchasing Cooperative

Electronic Delivery

Ben Hernandez
Nueces Farm Center, Inc. dba Nueces Power Equipment
5201 US Hwy 59 N
Victoria, TX 77905

Welcome to BuyBoard!

Re: *Notice of National Purchasing Cooperative Award;* Proposal Invitation No. 788-25, Construction, Road and Bridge, and Other Related Equipment

Congratulations, The National Purchasing Cooperative (National Cooperative) has awarded your company a BuyBoard® contract based on the above-referenced Proposal Invitation. The contract is effective for an initial one-year term of December 1, 2025 through November 30, 2026, and may be subject to two possible one-year renewals. Please refer to the Proposal Invitation for the contract documents, including the National Purchasing Cooperative Vendor Award Agreement and General Terms and Conditions of the Contract.

To review the items your company has been awarded, please review Proposal Tabulation No. 788-25 at www.buyboard.com/vendor. Only items marked as awarded to your company are included in this contract award, and only those awarded items may be sold through the BuyBoard contract. All sales must comply with the contract terms and must be at or below the awarded pricing as set forth in the General Terms and Conditions.

A list of National Cooperative members is available on the buyboard.com website. In addition, the BuyBoard Administrator's vendor relations staff is available to assist you in locating available BuyBoard informational resources and answering questions you may have as an awarded BuyBoard vendor.

On behalf of the National Cooperative, we are looking forward to your participation in the program. If you have any questions, feel free to contact me at bids@buyboard.com.

Sincerely,

Stacy Finn

Stacy Finn, Bid Analyst
Texas Association of School Boards, Inc.,
Administrator for the National Purchasing Cooperative

v.01.03.2025

PROPOSER'S ACCEPTANCE AND AGREEMENT

Proposal Invitation Name Construction, Road and Bridge, and Other Related Equipment	**Proposal Due Date/Opening Date and Time** July 17, 2025, at 4:00 PM
Proposal Invitation Number 788-25	**Location of Proposal Opening** Texas Association of School Boards, Inc. BuyBoard Department 12007 Research Blvd. Austin, TX 78759
Contract Term December 1, 2025, through November 30, 2026, with two possible one-year renewals.	**Anticipated Cooperative Board Meeting Date** October 2025

By signature below, the undersigned acknowledges and agrees that you are authorized to submit this Proposal, including making all acknowledgements, consents, and certifications herein, on behalf of Proposer and, to the best of your knowledge, the information provided is true, accurate, and complete.

Nueces Power Equipment
Name of Proposing Company

07/07/2025
Date

7510 IH 37 Access Road
Street Address

Ben Hernandez
Signature of Authorized Company Official

Corpus Christi, TX 78408
City, State, Zip

Ben Hernandez
Printed Name of Authorized Company Official

361-289-0066
Telephone Number of Authorized Company Official

General Manager
Position or Title of Authorized Company Official

361-576-1141
Fax Number of Authorized Company Official

74-1649707
Federal ID Number

PROPOSAL FORMS PART 1: COMPLIANCE FORMS

INSTRUCTIONS:

Proposer must review and complete all forms in this Proposal Forms Part 1:

- Proposal Acknowledgements
- Felony Conviction Disclosure
- Resident/Nonresident Certification
- Debarment Certification
- Vendor Employment Certification
- No Boycott Verification
- No Excluded Nation or Foreign Terrorist Organization Certification
- Historically Underutilized Business Certification
- Acknowledgement of BuyBoard Technical Requirements
- Construction-Related Goods and Services Affirmation
- Deviation and Compliance
- Vendor Consent for Name Brand Use
- Confidential/Proprietary Information
- EDGAR Vendor Certification
- Compliance Forms Signature Page

An authorized representative of Proposer ***must initial in the bottom right corner of each page*** **where indicated and complete and sign the Compliance Forms Signature Page. Proposer's failure to fully complete, initial, and sign forms as required may result in your Proposal being rejected as non-responsive.**

PROPOSAL ACKNOWLEDGEMENTS

The proposing company ("you" or "your") hereby acknowledges and agrees as follows:

1. You have carefully examined and understand all information and documentation associated with this Proposal Invitation, including the Instructions to Proposers, General Information, General Terms and Conditions, attachments/forms, appendices, item specifications, and line items (collectively "Requirements");
2. By your response ("Proposal") to this Proposal Invitation, you propose to supply the products or services submitted at the pricing quoted in your Proposal and in strict compliance with the Requirements, unless specific deviations or exceptions are noted in the Proposal;
3. By your Proposal, you acknowledge and certify all items set forth in the General Terms and Conditions, Section B.12 (Certifications), including all non-collusion certifications and certifications regarding legal, ethical, and other matters set forth therein.
4. Any and all deviations and exceptions to the Requirements have been noted in your Proposal on the required form and no others will be claimed;

Initial: BSH

5. If the Cooperative accepts any part of your Proposal and awards you a Contract, you will furnish all awarded products or services at the pricing quoted and in strict compliance with the Requirements (unless specific deviations or exceptions are noted on the required form and accepted by the Cooperative), including without limitation the Requirements related to:
   a. conducting business with Cooperative members, including offering pricing to members that is the best you offer compared to similarly situated customers in similar circumstances;
   b. payment of a service fee in the amount specified and as provided for in this Proposal Invitation;
   c. the **possible** award of a piggy-back contract by the National Purchasing Cooperative or nonprofit entity, in which event you will offer the awarded products and services in accordance with the Requirements; and
   d. submitting price sheets or catalogs in the proper format as required by the Cooperative as a prerequisite to activation of your Contract;
6. You have clearly identified on the included form any information in your Proposal that you believe to be confidential or proprietary or that you do not consider to be public information subject to public disclosure under the Texas Public Information Act or similar public information law;
7. The individual submitting this Proposal is duly authorized to enter into the contractual relationship represented by this Proposal Invitation on your behalf and bind you to the Requirements, and such individual (and any individual signing a form or Proposal document) is authorized and has the requisite knowledge to provide the information and make the representations and certifications required in the Requirements;
8. You have carefully reviewed your Proposal, and certify that all information provided is true, complete, and accurate to the best of your knowledge, and you authorize the Cooperative to take such action as it deems appropriate to verify such information; and
9. Any misstatement, falsification, or omission in your Proposal, whenever or however discovered, will be grounds for disqualifying you from consideration for a contract award under this Proposal Invitation, termination of a contract award, or any other remedy or action provided for in the General Terms and Conditions or by law.

FELONY CONVICTION DISCLOSURE

Subsection (a) of Section 44.034 of the Texas Education Code (Notification of Criminal History of Contractor) states: "A person or business entity that enters into a contract with a school district must give advance notice to the district if the person or an owner or operator has been convicted of a felony. The notice must include a general description of the conduct resulting in the conviction of a felony."

Section 44.034 further states in Subsection (b): "A school district may terminate a contract with a person or business entity if the district determines that the person or business entity failed to give notice as required by Subsection (a) or misrepresented the conduct resulting in the conviction. The district must compensate the person or business entity for services performed before the termination of the contract."

Please check (√) one of the following:

☐ My company is a publicly-held corporation. (Advance notice requirement does not apply to publicly-held corporation.)
☒ My company is not owned or operated by anyone who has been convicted of a felony.
☐ My company is owned/operated by the following individual(s) who has/have been convicted of a felony:

Name of Felon(s): _____

Details of Conviction(s): _____

_____

Initial: BSH

RESIDENT/NONRESIDENT CERTIFICATION

Chapter 2252, Subchapter A, of the Texas Government Code establishes certain requirements applicable to proposers who are not Texas residents. Under the statute, a "resident" proposer is a person whose principal place of business is in Texas, including a contractor whose ultimate parent company or majority owner has its principal place of business in Texas. A "nonresident" proposer is a person who is not a Texas resident. Please indicate the status of your company as a "resident" proposer or a "nonresident" proposer under these definitions.

Please check (√) one of the following:

- ☒ I certify that my company is a **Resident Proposer.**
- ☐ I certify that my company is a **Nonresident Proposer.**

If your company is a Nonresident Proposer, you must provide the following information for your resident state (the state in which your company's principal place of business is located):

Company Name _____ Address _____

City _____ State _____ Zip Code _____

A. Does your resident state require a proposer whose principal place of business is in Texas to under-price proposers whose resident state is the same as yours by a prescribed amount or percentage to receive a comparable contract?

☐ Yes ☐ No

B. What is the prescribed amount or percentage? $_____ or _____%

DEBARMENT CERTIFICATION

By signature on the Compliance Forms Signature Page, I certify that neither my company nor an owner or principal of my company has been debarred, suspended or otherwise made ineligible for participation in Federal Assistance programs under Executive Order 12549, "Debarment and Suspension," as described in the Federal Register and Rules and Regulations. Neither my company nor an owner or principal of my company is currently listed on the government-wide exclusions in SAM, debarred, suspended, or otherwise excluded by agencies or declared ineligible under any statutory or regulatory authority. My company agrees to immediately notify the Cooperative and all Cooperative members with pending purchases or seeking to purchase from my company if my company or an owner or principal is later listed on the government-wide exclusions in SAM, or is debarred, suspended, or otherwise excluded by agencies or declared ineligible under any statutory or regulatory authority.

VENDOR EMPLOYMENT CERTIFICATION

Section 44.031(b) of the Texas Education Code establishes certain criteria that a school district must consider when determining to whom to award a contract. Among the criteria for certain contracts is whether the vendor or the vendor's ultimate parent or majority owner (i) has its principal place of business in Texas; or (ii) employs at least 500 people in Texas. If neither your company nor the ultimate parent company or majority owner has its principal place of business in Texas, does your company, ultimate parent company, or majority owner employ at least 500 people in Texas?

Please check (√) one of the following:

☒ Yes ☐ No

Initial: BSH

NO BOYCOTT VERIFICATION

A Texas governmental entity may not enter into a contract with a value of $100,000 or more that is to be paid wholly or partly from public funds with a company (excluding a sole proprietorship) that has 10 or more full-time employees for goods or services unless the contract contains a written verification from the company that it: (1) does not boycott Israel and will not boycott Israel during the term of the contract (TEX. GOV'T CODE Ch. 2271), (2) does not boycott energy companies and will not boycott energy companies during the term of the contract (TEX. GOV'T CODE Ch. 2276), and (3) does not have a practice, policy, guidance, or directive that discriminates against a firearm entity or firearm trade association and will not discriminate during the term of the contract against a firearm entity or firearm trade association (TEX. GOV'T CODE Ch. 2274). Accordingly, this certification form is included to the extent required by law.

"Boycott Israel" means refusing to deal with, terminating business activities with, or otherwise taking any action that is intended to penalize, inflict economic harm on, or limit commercial relations specifically with Israel, or with a person or entity doing business in Israel or in an Israeli-controlled territory, but does not include an action made for ordinary business purposes. TEX. GOV'T CODE §808.001(1).

"Boycott energy company" means, without an ordinary business purpose, refusing to deal with, terminating business activities with, or otherwise taking any action that is intended to penalize, inflict economic harm on, or limit commercial relations with a company because the company: (A) engages in the exploration, production, utilization, transportation, sale, or manufacturing of fossil fuel-based energy and does not commit or pledge to meet environmental standards beyond applicable federal and state law; or (B) does business with a company described by Paragraph (A). TEX. GOV'T CODE §809.001(1).

"Discriminate against a firearm entity or firearm trade association" means, (A) with respect to the entity or association, to: (i) refuse to engage in the trade of any goods or services with the entity or association based solely on its status as a firearm entity or firearm trade association; (ii) refrain from continuing an existing business relationship with the entity or association based solely on its status as a firearm entity or firearm trade association; or (iii) terminate an existing business relationship with the entity or association based solely on its status as a firearm entity or firearm trade association; and (B) does not include: (i) the established policies of a merchant, retail seller, or platform that restrict or prohibit the listing or selling of ammunition, firearms, or firearm accessories; and (ii) a company's refusal to engage in the trade of any goods or services, decision to refrain from continuing an existing business relationship, or decision to terminate an existing business relationship: (aa) to comply with federal, state, or local law, policy, or regulations or a directive by a regulatory agency; or (bb) for any traditional business reason that is specific to the customer or potential customer and not based solely on an entity's or association's status as a firearm entity or firearm trade association. TEX. GOV'T CODE §2274.001(3).

By signature on the Compliance Forms Signature Page, to the extent applicable, I certify and verify that Vendor does not boycott Israel, boycott energy companies, or discriminate against a firearm entity or firearm trade association and will not do so during the term of any contract awarded under this Proposal Invitation, that this certification is true, complete and accurate, and that I am authorized by my company to make this certification.

Initial: BSH

NO EXCLUDED NATION OR FOREIGN TERRORIST ORGANIZATION CERTIFICATION

Chapter 2252 of the Texas Government Code provides that a Texas governmental entity may not enter into a contract with a company engaged in active business operations with Sudan, Iran, or a foreign terrorist organization – specifically, any company identified on a list prepared and maintained by the Texas Comptroller under Texas Government Code §§806.051, 807.051, or 2252.153. (A company that the U.S. Government affirmatively declares to be excluded from its federal sanctions regime relating to Sudan, Iran, or any federal sanctions regime relating to a foreign terrorist organization is not subject to the contract prohibition.)

By signature on the Compliance Forms Signature Page, I certify and verify that Vendor is not on the Texas Comptroller's list identified above; that this certification is true, complete and accurate; and that I am authorized by my company to make this certification.

HISTORICALLY UNDERUTILIZED BUSINESS CERTIFICATION

A Proposer that has been certified as a Historically Underutilized Business (also known as a Minority/Women Business Enterprise or "MWBE" and all referred to in this form as a "HUB") is encouraged to indicate its HUB certification status when responding to this Proposal Invitation. The BuyBoard website will indicate HUB certifications for awarded Vendors that properly indicate and document their HUB certification on this form. *(Please check (√) all that apply)*

☐ I certify that my company has been certified as a HUB in the following categories:

☐ **Minority Owned Business** ☐ **Women Owned Business**
☐ **Service-Disabled Veteran Owned Business (veteran defined by 38 U.S.C. §101(2), who has a service-connected disability as defined by 38 U.S.C. § 101(16), and who has a disability rating of 20% or more as determined by the U. S. Department of Veterans Affairs or Department of Defense)**

Certification Number: _____

Name of Certifying Agency: _____

☒ My company has **NOT** been certified as a HUB.

ACKNOWLEDGEMENT OF BUYBOARD TECHNICAL REQUIREMENTS

Vendor shall review the BuyBoard Technical Requirements included in this Proposal Invitation. By signature on the Compliance Forms Signature Page, the undersigned affirms that Proposer has obtained a copy of the BuyBoard Technical Requirements, has read and understands the requirements, and certifies that Vendor is able to meet and will comply with those requirements except as follows: *[List and explain BuyBoard Technical Requirements, if any, to which your company **cannot** or will **not** comply.]*

Note: In accordance with the General Terms and Conditions of the Contract, to the extent Vendor is awarded a Contract under this Proposal Invitation but is unable or unwilling to meet the applicable BuyBoard Technical Requirements, the information available on the BuyBoard for Vendor's awarded products or services may be limited, potentially placing Vendor at a disadvantage and impacting the ability of Cooperative members to search, find, review, and purchase Vendor's awarded products and services on the BuyBoard website. Further, to the extent Vendor has acknowledged ability to meet and comply with the BuyBoard Technical Requirements, any subsequent failure or refusal by Vendor to promptly provide information upon request to the Cooperative administrator in accordance with those technical requirements may be deemed an event of default under the Contract. **Initial:** BSH

CONSTRUCTION-RELATED GOODS AND SERVICES AFFIRMATION

The Cooperative issued the BuyBoard Procurement and Construction-Related Goods and Services Advisory for Texas Members ("Advisory"), which provides information specifically relevant to the procurement of construction-related goods and services by Texas Cooperative members. The Advisory, available at buyboard.com/Vendor/Resources.aspx, provides an overview of certain legal requirements that are potentially relevant to a Cooperative member's procurement of construction or construction-related goods and services, including those for projects that may involve or require architecture, engineering or independent testing services. A copy of the Advisory can also be provided upon request. Because many BuyBoard contracts include goods or installation services that might be considered construction-related, Proposer must make this Construction Related-Goods and Services Affirmation regardless of type of goods or services associated with this Proposal Invitation.

A contract awarded under this Proposal Invitation covers only the specific goods and/or services awarded by the Cooperative. As explained in the Advisory ("Advisory"), **Texas law prohibits the procurement of architecture or engineering services through a purchasing cooperative. This Proposal Invitation and any Contract awarded thereunder does not include such services. Architecture or engineering services must be procured by a Cooperative member separately, in accordance with the Professional Services Procurement Act (Chapter 2254 of the Texas Government Code) and other applicable law and local policy.**

By signature on the Compliance Forms Signature Page, Proposer affirms that Proposer has obtained a copy of the Advisory, has read and understands the Advisory, and is authorized by Proposer to make this affirmation. If Proposer sells construction-related goods or services to a Cooperative member under a Contract awarded under this Proposal Invitation, Proposer will comply with the Advisory and applicable legal requirements, make a good faith effort to make its Cooperative member customers or potential Cooperative member customers aware of such requirements, and provide a Cooperative member with a copy of the Advisory before accepting the member's Purchase Order or other agreement for construction-related goods or services.

Initial: BSH

DEVIATION AND COMPLIANCE

If your company intends to deviate from the General Terms and Conditions, Proposal Specifications or other requirements associated with this Proposal Invitation, you MUST list all such deviations on this form, and provide complete and detailed information regarding the deviations on this form or an attachment to this form. **Prior to completing this form, Vendor shall review the General Terms and Conditions section B.4 (Deviations from Item Specifications and General Terms and Conditions). Please note that, as provided in section B.4, certain provisions of the General Terms and Conditions are NOT subject to deviation, and certain deviations will be deemed rejected without further action by the Cooperative. Any attempted deviation, whether directly or indirectly, to provisions identified in this Proposal Invitation as not subject to deviation shall be deemed rejected by the Cooperative and, unless otherwise withdrawn by Vendor, may result in Vendor's Proposal being rejected in its entirety.**

The Cooperative will consider any deviations in its contract award decision and reserves the right to accept or reject a proposal based upon any submitted deviation.

In the absence of any deviation identified and described in accordance with the above, your company must fully comply with the General Terms and Conditions, Proposal Specifications and all other requirements associated with this Proposal Invitation if awarded a Contract under this Proposal Invitation. A deviation will not be effective unless accepted by the Cooperative. The Cooperative, by and through the Cooperative administrator, may, in its sole discretion, seek clarification from and/or communicate with Proposer(s) regarding any submitted deviation, consistent with general procurement principles of fair competition. The Cooperative reserves the right to accept or reject a Proposal based upon any submitted deviation.

Please check (√) one of the following:

☒ **No**; Deviations
☐ **Yes**; Deviations

List and fully explain any deviations you are submitting:

Initial: BSH

VENDOR CONSENT FOR NAME BRAND USE

BuyBoard members seeking to make purchases using a Contract awarded under this Proposal Invitation may view information regarding awarded Vendors, including but not limited to product catalogs, price lists, pricing, and Proposals, through the BuyBoard website. To improve and enhance the experience of BuyBoard members seeking to procure goods and services under the Contract utilizing the BuyBoard website, any Vendor logo, product images, and similar brand and trademark information provided by Vendor for purposes of the Contract ("Vendor Information") may be posted on the BuyBoard website.

You acknowledge that, by submitting your Proposal, unless you specifically opt out below, you consent to use of your company's Vendor Information on the BuyBoard website if awarded a Contract. You further acknowledge that whether, where, and when to include the Vendor Information on the BuyBoard website shall be at the sole discretion of the BuyBoard Administrator. Vendor retains, however, the right of general quality control over the BuyBoard Administrator's authorized display of proprietary Vendor Information. Neither the BuyBoard nor its administrator will be responsible for the use or distribution of Vendor Information by BuyBoard members or any other third party using the BuyBoard website. This Vendor Consent shall be effective for the full term of the Contract, including renewals, unless Vendor provides a signed, written notice revoking consent to contractadmin@buyboard.com. BuyBoard shall have up to thirty days from the date of receipt of a termination or revocation of a Vendor Consent to remove Vendor information from the BuyBoard website.

This Vendor Consent is subject to the Terms and Conditions of the Contract, including, but not limited to, those terms pertaining to Disclaimer of Warranty and Limitation of Liability, Indemnification, and Intellectual Property Infringement.

Vendor logo files must be submitted in one of the formats set forth in the BuyBoard Technical Requirements. Proposers are requested to submit this information with Vendor's Proposal. (This consent shall not authorize use of your company's Vendor Information by BuyBoard if your company is not awarded a Contract.)

OPT OUT:

If your company wishes to opt out of the Vendor Consent for Name Brand Use, you must check the opt out box below. *DO NOT select this box unless your company is opting out of this Vendor Consent for Name Brand Use.*

☐ By checking this box, Vendor hereby declines to provide consent for use of Vendor Information (as defined herein) on the BuyBoard website. **By opting out, Vendor acknowledges and agrees that, if Vendor is awarded a Contract under this Proposal Invitation, information available on the BuyBoard for Vendor's awarded products or services may be limited, potentially placing Vendor at a disadvantage and impacting the ability of Cooperative members to search, find, review, and purchase Vendor's awarded products and services on the BuyBoard website.**

Initial: BSH

CONFIDENTIAL/PROPRIETARY INFORMATION

A. Public Disclosure Laws

All Proposals, forms, documentation, catalogs, price lists, or other materials submitted by Vendor to the Cooperative in response to this Proposal Invitation, may be subject to the disclosure requirements of the Texas Public Information Act (Texas Government Code chapter 552.001, *et. seq.*) or similar disclosure law. Proposer must clearly identify on this form any information in its Proposal (including forms, documentation, or other materials submitted with the Proposal) that Proposer considers proprietary or confidential. If Proposer fails to properly identify the information, the Cooperative shall have no obligation to notify Vendor or seek protection of such information from public disclosure should a member of the public or other third party request access to the information under the Texas Public Information Act or similar disclosure law. When required by the Texas Public Information Act or other disclosure law, Proposer may be notified of any third-party request for information in a Proposal that Proposer has identified in this form as proprietary or confidential.

Does your Proposal (including forms, documentation, catalogs, price lists, or other materials submitted with the Proposal) contain information which Vendor considers proprietary or confidential?

Please check (√) one of the following:

☐ **NO**, I certify that none of the information included with this Proposal is considered confidential or proprietary.

☒ **YES**, I certify that this Proposal contains information considered confidential or proprietary and all such information is specifically identified on this form.

If you responded "YES", you must clearly identify below the specific information you consider confidential or proprietary. List each page number, form number, or other information sufficient to make the information readily identifiable. The Cooperative and Cooperative administrator shall not be responsible for a Proposer's failure to clearly identify information considered confidential or proprietary. Further, by submitting a Proposal, Proposer acknowledges that the Cooperative and Cooperative administrator will disclose information when required by law, even if such information has been identified herein as information Vendor considers confidential or proprietary.

Confidential / Proprietary Information:

Catalog Pricelists submitted in this proposal are confidential and proprietary

(Attach additional sheets if needed.)

Initial: BSH

B. Copyright Information

Does your Proposal (including forms, documentation, price lists, catalogs, or other materials submitted with the Proposal) contain copyright information?

Please check (√) one of the following:

☒ **NO,** Proposal (including forms, documentation, price lists, catalogs, or other materials submitted with the Proposal) does not contain copyright information.

☐ **YES,** Proposal (including forms, documentation, price lists, catalogs, or other materials submitted with the Proposal) does contain copyright information.

If you responded "YES", clearly identify below the specific documents or pages containing copyright information.

Copyright Information: _____

_____

_____

_____

(Attach additional sheets if needed.)

C. Consent to Release Confidential/Proprietary/Copyright Information to BuyBoard Members

BuyBoard members (Cooperative and nonprofit members) seeking to make purchases through the BuyBoard may wish to view information included in the Proposals of awarded Vendors. If you identified information on this form as confidential, proprietary, or subject to copyright, and you are awarded a BuyBoard contract, your acceptance of the BuyBoard contract award constitutes your consent to the disclosure of such information to BuyBoard members, including posting of such information on the secure BuyBoard website for members. Note: Neither the Cooperative nor Cooperative administrator will be responsible for the use or distribution of information by BuyBoard members or any other party.

D. Consent to Release Proposal Tabulation

Notwithstanding anything in this Confidential/Proprietary Information form to the contrary, by submitting a Proposal, Vendor consents and agrees that, upon Contract award, the Cooperative may publicly release, including posting on the public BuyBoard website, a copy of the proposal tabulation and award information for the Contract including Vendor name; proposed catalog/price list name(s); proposed percentage discount(s), hourly labor rate(s), or other specified pricing; and Vendor award or non-award information.

Initial: BSH

EDGAR VENDOR CERTIFICATION
(2 CFR Part 200 and Appendix II)

When a Cooperative member seeks to procure goods and services using funds under a federal grant or contract, specific federal laws, regulations, and requirements may apply in addition to those under state law. This includes, but is not limited to, the procurement standards of the Uniform Administrative Requirements, Cost Principles and Audit Requirements for Federal Awards, 2 CFR 200 (sometimes referred to as the "Uniform Guidance" or new "EDGAR"). All Vendors submitting a Proposal must complete this EDGAR Certification Form regarding Vendor's willingness and ability to comply with certain requirements which ***may*** be applicable to specific Cooperative member purchases using federal grant funds. Completed forms will be made available to Cooperative members for their use while considering their purchasing options when using federal grant funds. Cooperative members may also require Vendors to enter into ancillary agreements, in addition to the terms and conditions of the BuyBoard contract, to address the member's specific contractual needs, including contract requirements for a procurement using federal grants or contracts.

For <u>each</u> of the items below, Vendor should certify Vendor's agreement and ability to comply, where applicable, by having Vendor's authorized representative check the applicable boxes, initial each page, and sign the Compliance Forms Signature Page. If you fail to complete any item in this form, the Cooperative will consider and may list the Vendor's response on the BuyBoard as "NO," the Vendor is unable or unwilling to comply. A "NO" response to any of the items may, if applicable, impact the ability of a Cooperative member to purchase from the Vendor using federal funds.

1. Vendor Violation or Breach of Contract Terms:

Contracts for more than the simplified acquisition threshold, which is the inflation adjusted amount determined by the Civilian Agency Acquisition Council and the Defense Acquisition Regulations Council (Councils) as authorized by 41 USC 1908, must address administrative, contractual, or legal remedies in instances where contractors violate or breach contract terms, and provide for such sanctions and penalties as appropriate.

Provisions regarding Vendor default are included in the BuyBoard General Terms and Conditions, including Section E.18, Remedies for Default and Termination of Contract. Any Contract award will be subject to such BuyBoard General Terms and Conditions, as well as any additional terms and conditions in any Purchase Order or Cooperative member ancillary contract agreed upon by Vendor and the Cooperative member which must be consistent with and protect the Cooperative member at least to the same extent as the BuyBoard Terms and Conditions. The remedies under the Contract are in addition to any other remedies that may be available under law or in equity. By submitting a Proposal, you agree to these Vendor violation and breach of contract terms.

■ **YES**, I agree. ☐ **NO**, I do not agree.

2. Termination for Cause or Convenience:

For any Cooperative member purchase or contract in excess of $10,000 made using federal funds, you agree that the following term and condition shall apply:

The Cooperative member may terminate or cancel any Purchase Order under this Contract at any time, with or without cause, by providing seven (7) business days advance written notice to the Vendor. If this Agreement is terminated in accordance with this Paragraph, the Cooperative member shall only be required to pay Vendor for goods or services delivered to the Cooperative member prior to the termination and not otherwise returned in accordance with Vendor's return policy. If the Cooperative member has paid Vendor for goods or services not yet provided as of the date of termination, Vendor shall immediately refund such payment(s).

If an alternate provision for termination of a Cooperative member purchase for cause and convenience, including the manner by which it will be effected and the basis for settlement, is included in the Cooperative member's Purchase Order or ancillary agreement agreed to by the Vendor, the Cooperative member's provision shall control.

■ **YES**, I agree. ☐ **NO**, I do not agree. **Initial:** BSH

3. Equal Employment Opportunity:

Except as otherwise provided under 41 CFR Part 60, all Cooperative member purchases or contracts that meet the definition of "federally assisted construction contract" in 41 CFR Part 60-1.3 shall be deemed to include the equal opportunity clause provided under 41 CFR 60-1.4(b), in accordance with Executive Order 11246, "Equal Employment Opportunity" (30 FR 12319, 12935, 3 CFR Part, 1964-1965 Comp., p. 339), as amended by Executive Order 11375, "Amending Executive Order 11246 Relating to Equal Employment Opportunity," and implementing regulations at 41 CFR Part 60, "Office of Federal Contract Compliance Programs, Equal Employment Opportunity, Department of Labor."

The equal opportunity clause provided under 41 CFR 60-1.4(b) is hereby incorporated by reference. Vendor agrees that such provision applies to any Cooperative member purchase or contract that meets the definition of "federally assisted construction contract" in 41 CFR Part 60-1.3 and Vendor agrees that it shall comply with such provision.

■ **YES**, I agree. ☐ **NO**, I do not agree.

4. Davis-Bacon Act:

When required by Federal program legislation, Vendor agrees that, for all Cooperative member prime construction contracts/purchases in excess of $2,000, Vendor shall comply with the Davis-Bacon Act (40 USC 3141-3144, and 3146-3148) as supplemented by Department of Labor regulations (29 CFR Part 5, "Labor Standards Provisions Applicable to Contracts Covering Federally Financed and Assisted Construction"). In accordance with the statute, Vendor is required to pay wages to laborers and mechanics at a rate not less than the prevailing wages specified in a wage determinate made by the Secretary of Labor. In addition, Vendor shall pay wages not less than once a week.

Current prevailing wage determinations issued by the Department of Labor are available at www.sam.gov. Vendor agrees that, for any purchase to which this requirement applies, the award of the purchase to the Vendor is conditioned upon Vendor's acceptance of the wage determination.

Vendor further agrees that it shall also comply with the Copeland "Anti-Kickback" Act (40 USC 3145), as supplemented by Department of Labor regulations (29 CFR Part 3, "Contractors and Subcontractors on Public Building or Public Work Financed in Whole or in Part by Loans or Grants from the United States"). The Act provides that each contractor or subrecipient must be prohibited from inducing, by any means, any person employed in the construction, completion, or repair of public work, to give up any part of the compensation to which he or she is otherwise entitled.

■ **YES**, I agree. ☐ **NO**, I do not agree.

5. Contract Work Hours and Safety Standards Act:

Where applicable, for all Cooperative member contracts or purchases in excess of $100,000 that involve the employment of mechanics or laborers, Vendor agrees to comply with 40 USC 3702 and 3704, as supplemented by Department of Labor regulations (29 CFR Part 5). Under 40 USC 3702 of the Act, Vendor is required to compute the wages of every mechanic and laborer on the basis of a standard work week of 40 hours. Work in excess of the standard work week is permissible provided that the worker is compensated at a rate of not less than one and a half times the basic rate of pay for all hours worked in excess of 40 hours in the work week.

The requirements of 40 USC 3704 are applicable to construction work and provide that no laborer or mechanic must be required to work in surroundings or under working conditions which are unsanitary, hazardous or dangerous. These requirements do not apply to the purchases of supplies or materials or articles ordinarily available on the open market, or contracts for transportation or transmission of intelligence.

■ **YES**, I agree. ☐ **NO**, I do not agree.

Initial: BSH

6. Right to Inventions Made Under a Contract or Agreement:

If the Cooperative member's Federal award meets the definition of "funding agreement" under 37 CFR 401.2(a) and the recipient or subrecipient wishes to enter into a contract with a small business firm or nonprofit organization regarding the substitution of parties, assignment or performance or experimental, developmental, or research work under that "funding agreement," the recipient or subrecipient must comply with the requirements of 37 CFR Part 401, "Rights to Inventions Made by Nonprofit Organizations and Small Business Firms Under Government Grants, Contracts and Cooperative Agreements," and any implementing regulations issued by the awarding agency.

Vendor agrees to comply with the above requirements when applicable.

■ **YES**, I agree. ☐ **NO**, I do not agree.

7. Clean Air Act and Federal Water Pollution Control Act:

Clean Air Act (42 USC 7401-7671q.) and the Federal Water Pollution Control Act (33 USC 1251-1387), as amended – Contracts and subgrants of amounts in excess of $150,000 must contain a provision that requires the non-Federal award to agree to comply with all applicable standards, orders, or regulations issued pursuant to the Clean Air Act (42 USC 7401-7671q.) and the Federal Water Pollution Control Act, as amended (33 USC 1251-1387). Violations must be reported to the Federal awarding agency and the Regional Office of the Environmental Protection Agency (EPA).

When required, Vendor agrees to comply with all applicable standards, orders, or regulations issued pursuant to the Clean Air Act and the Federal Water Pollution Control Act.

■ **YES**, I agree. ☐ **NO**, I do not agree.

8. Debarment and Suspension:

Debarment and Suspension (Executive Orders 12549 and 12689) – A contract award (see 2 CFR 180.220) must not be made to parties listed on the government-wide exclusions in the System for Award Management (SAM), in accordance with the OMB guidelines at 2 CFR 180 that implement Executive Orders 12549 (3 CFR Part 1966 Comp. p. 189) and 12689 (3 CFR Part 1989 Comp. p. 235), "Debarment and Suspension." SAM Exclusions contains the names of parties debarred, suspended, or otherwise excluded by agencies, as well as parties declared ineligible under statutory or regulatory authority other than Executive Order 12549.

Vendor certifies that Vendor is not currently listed on the government-wide exclusions in SAM, is not debarred, suspended, or otherwise excluded by agencies or declared ineligible under statutory or regulatory authority other than Executive Order 12549. Vendor further agrees to immediately notify the Cooperative and all Cooperative members with pending purchases or seeking to purchase from Vendor if Vendor is later listed on the government-wide exclusions in SAM, or is debarred, suspended, or otherwise excluded by agencies or declared ineligible under statutory or regulatory authority other than Executive Order 12549.

■ **YES**, I agree. ☐ **NO**, I do not agree.

9. Byrd Anti-Lobbying Amendment:

Byrd Anti-Lobbying Amendment (31 USC 1352) - Vendors that apply or bid for an award exceeding $100,000 must file the required certification. Each tier certifies to the tier above that it will not and has not used Federal appropriated funds to pay any person or organization for influencing or attempting to influence an officer or employee of any agency, a member of Congress, officer or employee of Congress, or an employee of a member of Congress in connection with obtaining any Federal contract, grant or any other award covered by 31 USC 1352. Each tier must also disclose any lobbying with non-Federal funds that takes place in connection with obtaining any Federal award. Such disclosures are forwarded from tier to tier up to the non-Federal award. As applicable, Vendor agrees to file all certifications and disclosures required by, and otherwise comply with, the Byrd Anti-Lobbying Amendment (31 USC 1352).

■ **YES**, I agree. ☐ **NO**, I do not agree.

Initial: BSH

10. Procurement of Recovered Materials:

For Cooperative member purchases utilizing Federal funds, Vendor agrees to comply with Section 6002 of the Solid Waste Disposal Act, as amended by the Resource Conservation and Recovery Act where applicable and provide such information and certifications as a Cooperative member may require to confirm estimates and otherwise comply. The requirements of Section 6002 include procuring only items designated in guidelines of the Environmental Protection Agency (EPA) at 40 CFR Part 247 that contain the highest percentage of recovered materials practicable, consistent with maintaining a satisfactory level of competition, where the purchase price of the item exceeds $10,000 or the value of the quantity acquired during the preceding fiscal year exceeded $10,000; procuring solid waste management services in a manner that maximizes energy and resource recovery, and establishing an affirmative procurement program for procurement of recovered materials identified in the EPA guidelines.

■ **YES**, I agree. ☐ **NO**, I do not agree.

11. Domestic Preferences for Procurements:

Where appropriate and consistent with law, 2 CFR §200.322 contains certain considerations for domestic preferences for procurements which may be applicable to Cooperative members using federal funds. When required by a Cooperative member, Vendor agrees to provide such information or certification as may reasonably be requested by the Cooperative member regarding Vendor's products, including whether goods, products, or materials are produced in the United States.

■ **YES**, I agree. ☐ **NO**, I do not agree.

12. Prohibition on Certain Telecommunications and Video Surveillance Services or Equipment

2 CFR §200.216 prohibits expending federal loan or grant funds to procure or obtain covered telecommunications equipment or services. To the extent applicable and when required by a Cooperative member, Vendor agrees to provide such information or certification as may reasonably be requested by the Cooperative member to confirm whether any telecommunications equipment or services provided by Vendor is covered telecommunications equipment or services under 2 CFR §200.216.

■ **YES**, I agree. ☐ **NO**, I do not agree.

13. General Compliance and Cooperation with Cooperative Members:

In addition to the foregoing specific requirements, Vendor agrees, in accepting any Purchase Order from a Cooperative member, it shall make a good faith effort to work with Cooperative members to provide such information and to satisfy such requirements as may apply to a particular Cooperative member purchase or purchases including, but not limited to, applicable recordkeeping and record retention requirements.

■ **YES**, I agree. ☐ **NO**, I do not agree.

Initial: BSH

COMPLIANCE FORMS SIGNATURE PAGE

By initialing pages and by signature below, I certify that I have reviewed the following forms; that the information provided therein is true, complete, and accurate; and that I am authorized by my company to make all certifications, consents, acknowledgements, and agreements contained herein:

- Proposal Acknowledgements
- Felony Conviction Disclosure
- Debarment Certification
- Resident/Nonresident Certification
- Vendor Employment Certification
- No Boycott Verification
- No Excluded Nation or Foreign Terrorist Organization Certification
- Historically Underutilized Business Certification
- Construction-Related Goods and Services Affirmation
- Acknowledgement of BuyBoard Technical Requirements
- Deviation and Compliance
- Vendor Consent for Name Brand Use
- Confidential/Proprietary Information
- EDGAR Vendor Certification

Nueces Power Equipment
Company Name

Ben Hernandez
Signature of Authorized Company Official

Ben Hernandez General Manager
Printed Name and Title

07/07/2025
Date

PROPOSAL FORMS PART 2: VENDOR INFORMATION FORMS

INSTRUCTIONS:

Proposer must completely and accurately provide all information requested in the following Vendor Information Forms or your Proposal may be rejected as non-responsive:

- Vendor Business Name
- Vendor Contact Information
- Federal and State/Purchasing Cooperative Experience
- Governmental References
- Company Profile
- Texas Regional Service Designation
- State Service Designation
- National Purchasing Cooperative Vendor Award Agreement *(Vendors serving outside Texas only)*
- Local/Authorized Seller Listings
- Manufacturer Dealer Designation
- Proposal Invitation Questionnaire

To the extent any information requested is not applicable to your company, you must so indicate on the form.

VENDOR BUSINESS NAME

By submitting a Proposal, Vendor is seeking to enter into a legal contract with the Cooperative. As such, Vendor must be an individual or legal business entity capable of entering into a binding contract.

Name of Proposing Company:

Nueces Farm Center, Inc.

*(List the **legal** name of the company seeking to contract with the Cooperative. Do **NOT** list an assumed name, dba, aka, etc. here. Such information may be provided below. If you are submitting a joint proposal with another entity to provide the same proposed goods or services, each submitting entity should complete a separate vendor information form. Separately operating legal business entities, even if affiliated entities, which propose to provide goods or services separately must submit their own Proposals.)*

Please check (√) one of the following:

Type of Business: ☐ Individual/Sole Proprietor ■ Corporation ☐ Limited Liability Company ☐ Partnership

☐ Other (Specify: _____)

State of Incorporation (if applicable): Delaware

Federal Employer Identification Number: 74-1649707
*(Vendor must include a completed **IRS W-9** form with their Proposal)*

Name by which Vendor, if awarded, wishes to be identified on the BuyBoard: *(Note: If different than the Name of Proposing Company listed above, only valid trade names (dba, aka, etc.) of the Proposing Company may be used and a copy of your Assumed Name Certificate(s), if applicable, must be attached.)*

Nueces Power Equipment

Form **W-9**
(Rev. March 2024)
Department of the Treasury
Internal Revenue Service

Request for Taxpayer Identification Number and Certification

Go to *www.irs.gov/FormW9* for instructions and the latest information.

Give form to the requester. Do not send to the IRS.

Before you begin. For guidance related to the purpose of Form W-9, see *Purpose of Form*, below.

Print or type. See *Specific Instructions* on page 3.

1 Name of entity/individual. An entry is required. (For a sole proprietor or disregarded entity, enter the owner's name on line 1, and enter the business/disregarded entity's name on line 2.)

NUECES FARM CENTER, INC.

2 Business name/disregarded entity name, if different from above.

NUECES POWER EQUIPMENT

3a Check the appropriate box for federal tax classification of the entity/individual whose name is entered on line 1. Check only **one** of the following seven boxes.

☐ Individual/sole proprietor ☑ C corporation ☐ S corporation ☐ Partnership ☐ Trust/estate

☐ LLC. Enter the tax classification (C = C corporation, S = S corporation, P = Partnership) . . . . .

Note: Check the "LLC" box above and, in the entry space, enter the appropriate code (C, S, or P) for the tax classification of the LLC, unless it is a disregarded entity. A disregarded entity should instead check the appropriate box for the tax classification of its owner.

☐ Other (see instructions)

4 Exemptions (codes apply only to certain entities, not individuals; see instructions on page 3):

Exempt payee code (if any)

Exemption from Foreign Account Tax Compliance Act (FATCA) reporting code (if any)

(Applies to accounts maintained outside the United States.)

3b If on line 3a you checked "Partnership" or "Trust/estate," or checked "LLC" and entered "P" as its tax classification, and you are providing this form to a partnership, trust, or estate in which you have an ownership interest, check this box if you have any foreign partners, owners, or beneficiaries. See instructions . . . . . ☐

5 Address (number, street, and apt. or suite no.). See instructions.

PO BOX 4789

Requester's name and address (optional)

6 City, state, and ZIP code

CORPUS CHRISTI, TX 78469

7 List account number(s) here (optional)

Part I Taxpayer Identification Number (TIN)

Enter your TIN in the appropriate box. The TIN provided must match the name given on line 1 to avoid backup withholding. For individuals, this is generally your social security number (SSN). However, for a resident alien, sole proprietor, or disregarded entity, see the instructions for Part I, later. For other entities, it is your employer identification number (EIN). If you do not have a number, see *How to get a TIN*, later.

Note: If the account is in more than one name, see the instructions for line 1. See also *What Name and Number To Give the Requester* for guidelines on whose number to enter.

Social security number

			–			–				

or

Employer identification number

7	4	–	1	6	4	9	7	0	7

Part II Certification

Under penalties of perjury, I certify that:

1. The number shown on this form is my correct taxpayer identification number (or I am waiting for a number to be issued to me); and
2. I am not subject to backup withholding because (a) I am exempt from backup withholding, or (b) I have not been notified by the Internal Revenue Service (IRS) that I am subject to backup withholding as a result of a failure to report all interest or dividends, or (c) the IRS has notified me that I am no longer subject to backup withholding; and
3. I am a U.S. citizen or other U.S. person (defined below); and
4. The FATCA code(s) entered on this form (if any) indicating that I am exempt from FATCA reporting is correct.

Certification instructions. You must cross out item 2 above if you have been notified by the IRS that you are currently subject to backup withholding because you have failed to report all interest and dividends on your tax return. For real estate transactions, item 2 does not apply. For mortgage interest paid, acquisition or abandonment of secured property, cancellation of debt, contributions to an individual retirement arrangement (IRA), and, generally, payments other than interest and dividends, you are not required to sign the certification, but you must provide your correct TIN. See the instructions for Part II, later.

Sign Here | **Signature of U.S. person** Annette Alaniz **Date** 1/1/2025

General Instructions

Section references are to the Internal Revenue Code unless otherwise noted.

Future developments. For the latest information about developments related to Form W-9 and its instructions, such as legislation enacted after they were published, go to *www.irs.gov/FormW9*.

What's New

Line 3a has been modified to clarify how a disregarded entity completes this line. An LLC that is a disregarded entity should check the appropriate box for the tax classification of its owner. Otherwise, it should check the "LLC" box and enter its appropriate tax classification.

New line 3b has been added to this form. A flow-through entity is required to complete this line to indicate that it has direct or indirect foreign partners, owners, or beneficiaries when it provides the Form W-9 to another flow-through entity in which it has an ownership interest. This change is intended to provide a flow-through entity with information regarding the status of its indirect foreign partners, owners, or beneficiaries, so that it can satisfy any applicable reporting requirements. For example, a partnership that has any indirect foreign partners may be required to complete Schedules K-2 and K-3. See the Partnership Instructions for Schedules K-2 and K-3 (Form 1065).

Purpose of Form

An individual or entity (Form W-9 requester) who is required to file an information return with the IRS is giving you this form because they

P.O. Box 400, Austin, Texas 78767
800.695.2919 • bids@buyboard.com • buyboard.com

VENDOR CONTACT INFORMATION

Vendor shall provide the requested Vendor Contact Information in the electronic proposal submission system including contract, purchase order, RFQ, and invoice contacts (or, if submitting a hard copy Proposal, timely request and complete the Vendor Contact Information form in accordance with the Instructions to Proposers).

FEDERAL AND STATE/PURCHASING COOPERATIVE EXPERIENCE

The Cooperative strives to provide Cooperative members with the best services and products at the best prices available from Vendors with the technical resources and ability to serve Cooperative members. Please respond to the following questions.

1. Provide the dollar value of sales to or through purchasing cooperatives at or based on an established catalog or market price during the previous 12-month period or the last fiscal year: $_____. (The period of the 12-month period is 01/2024 / 01/2025). In the event that a dollar value is not an appropriate measure of the sales, provide and describe your own measure of the sales of the item(s).
2. By submitting a proposal, you agree that, based on your written discounting policies, the discounts you offer the Cooperative are equal to or better than the best price you offer other purchasing cooperatives for the same items under equivalent circumstances.
3. Provide the information requested below for other purchasing cooperatives for which Proposer currently serves, or in the past has served, as an awarded vendor. Rows should be added to accommodate as many purchasing cooperatives as required.

PURCHASING GROUP	CURRENT VENDOR? (Y/N)	FORMER VENDOR (Y/N)? – IF YES, LIST YEARS AS VENDOR	AWARDED COMMODITY CATEGORY(IES)
1. Federal General Services Administration			
2. T-PASS (State of Texas)			
3. OMNIA Partners			
4. Sourcewell (NJPA)	Y		Construction Machinery
5. E&I Cooperative			
6. Houston-Galveston Area Council (HGAC)	Y		Construction Machinery
7. Choice Partners			
8. The Interlocal Purchasing System (TIPS)			
9. Other			

☐ **MY COMPANY DOES NOT CURRENTLY HAVE ANY OF THE ABOVE OR SIMILAR TYPE CONTRACTS.**

CURRENT BUYBOARD VENDORS

If you are a current BuyBoard vendor in the same contract category as proposed in this Proposal Invitation, indicate the discount for your current BuyBoard contract and the proposed discount in this Proposal. Explain any difference between your current and proposed discounts.

Current Discount (%): 10 **Proposed Discount (%):** 10

Explanation: _____

GOVERNMENTAL REFERENCES

For your Proposal to be considered, you must supply a minimum of five (5) individual governmental entity references. The Cooperative may contact any and all references provided as part of the Proposal evaluation. Provide the information requested below, including the existing pricing/discounts you offer each customer. The Cooperative may determine whether pricing/discounts are fair and reasonable by comparing pricing/discounts stated in your Proposal with the pricing/discounts you offer other governmental customers. Attach additional pages if necessary.

	Entity Name	Contact	Phone#	Email Address	Discount	Quantity/ Volume
1.	Matagorda County	Troy Shimek	361-972-2719	pct3@co.matagorda.tx.us	2/$226,000.00	
2.	Fort Bend County	Russell Hurta	832-473-7997	russell.hurta@fortbendcountytx.gov	2/$726,000.00	
3.	Brazoria County	Jason McCaffety	979-345-1130	jasonm@brazoria-county.com	1/$186,000.00	
4.	Cameron County	Carlos Sanchez	956-204-4656	carlos.sanchez@co.cameron.tx.us	3/$304,000.00	
5.	City of Austin	Tyler Steinbarger	512-974-8720	tyler.steinbarger@austintexas.gov	1/$601,000.00	

Do you ever modify your written policies or standard governmental sales practices as identified in the above chart to give better discounts (lower pricing) than indicated? **YES** ☐ **NO** ■ If YES, please explain:

_____

_____

_____

COMPANY PROFILE

Information on awarded Cooperative Contracts is available to Cooperative Members on the BuyBoard website. If your company is awarded a Contract under this Proposal Invitation, please provide a brief company description that you would like to have included with your company profile on the BuyBoard website. **Submit your company profile in a separate file, in Word format, with your Proposal**. (Note: Vendor is solely responsible for any content provided for inclusion on the BuyBoard website. The Cooperative reserves the right to exclude or remove any content in its sole discretion, with or without prior notice, including but not limited to any content deemed by the Cooperative to be inappropriate, irrelevant to the Contract, inaccurate, or misleading.)

Nueces Power Equipment is a family owned and operated business that has served South Texas for more than 30 years. NPE's roots are in the Case Agriculture equipment business, but transitioned to a focus on earthmoving equipment in the early 1990s.

Our broad footprint consisting of 7 locations spans from Houston to El Paso, and down to Texas' southern border, and also includes Southern New Mexico. We utilize our extensive coverage to service our customers, as they work throughout South Texas and New Mexico. We represent equipment from several well-respected manufacturers by providing Sales, Rentals, Parts and Service to our customers.

Our goal has always been to provide world-class customer service to our customers, enabling them to build Texas.

Nueces Power Equipment supplies customers with a wide range of new, used and rental equipment, in addition to parts and service from our Corpus Christi, Texas, location headquarters. In 1990 and 1991, Nueces Power Equipment added facilities in Victoria and Laredo, Texas. Then we added our San Benito location in 1997 for the Rio Grande Valley of Texas. In 2004, with the great demand in south Texas, Nueces Power Equipment expanded into west Texas and southern New Mexico, building a new facility in Vinton, Texas. Since then, Nueces Power Equipment has opened up facilities in the San Antonio and Houston areas. Our rich 30 year history of growth will be continuing into the future with plans for expansion on the horizon.

We provide a powerful combination of equipment solutions. The right choice for all of your requirements, Nueces Power Equipment offers:

- Professionals on staff.
- Seven locations throughout south, central and west Texas for all of your parts, service, sales and rental needs.
- Equipment from the world's most respected manufacturers.
- Nueces Power Equipment provides quality service at an affordable price. We represent many major manufacturers of construction equipment and specialize in customer satisfaction.

TEXAS REGIONAL SERVICE DESIGNATION

This form must be completed in the electronic proposal submission system (or, if submitting a hard copy Proposal, timely request and complete the form in accordance with the Instructions to Proposers).

The Cooperative (referred to as "Texas Cooperative" in this form and in the State Service Designation form) offers vendors the opportunity to service its members throughout the entire State of Texas. In the electronic proposal submission system, you must indicate if you will service Texas Cooperative members statewide or, if you do not plan to service all Texas Cooperative members statewide, you ***must*** indicate the specific regions you will service. If you propose to serve different regions for different products or services included in your Proposal, you must complete and submit a separate Texas Regional Service Designation form for each group of products and clearly indicate the products or services to which the designation applies. **(Additional forms can be obtained by contacting** bids@buyboard.com *at least five (5) business days prior to the Proposal Due Date.*) ***By designating a region or regions, you are certifying that you are authorized and willing to provide the proposed products and services in those regions. Designating regions in which you are either unable or unwilling to provide the specified products and services shall be grounds for either rejection of your Proposal or, if awarded, termination of your Contract.*** Additionally, if you do not plan to service Texas Cooperative members (i.e., if you will service only states other than Texas), *you must so indicate on the form in the electronic proposal submission system.*

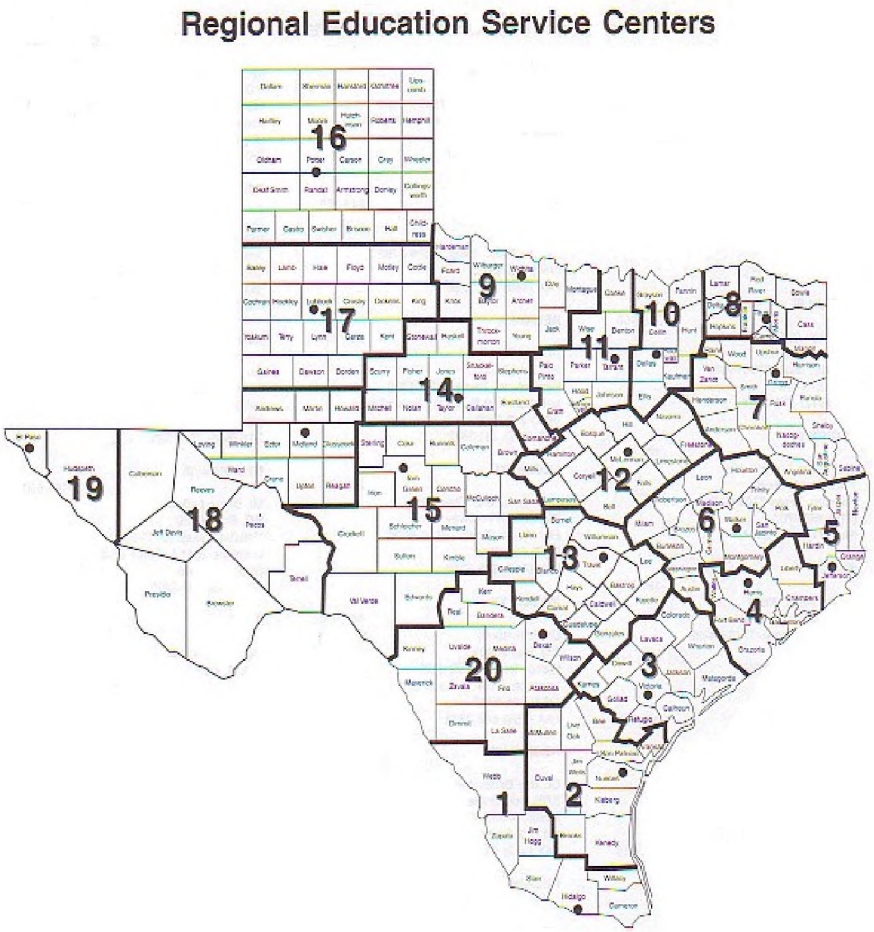

Region and Headquarters

1	Edinburg
2	Corpus Christi
3	Victoria
4	Houston
5	Beaumont
6	Huntsville
7	Kilgore
8	Mount Pleasant
9	Wichita Falls
10	Richardson
11	Fort Worth
12	Waco
13	Austin
14	Abilene
15	San Angelo
16	Amarillo
17	Lubbock
18	Midland
19	El Paso
20	San Antonio

STATE SERVICE DESIGNATION

This form must be completed in the electronic proposal submission system (or, if submitting a hard copy Proposal, timely request and complete the in accordance with the Instructions to Proposers).

As set forth in the Proposal Invitation, it is the Cooperative's intent that other governmental entities in the United States have the opportunity to purchase goods or services awarded under the Contract, subject to applicable state law, through a piggy-back award or similar agreement through the National Purchasing Cooperative BuyBoard. If you plan to service the entire United States or only specific states, *you must complete the State Service Designation information in the electronic proposal submission system. (Note: If you plan to service Texas Cooperative members, be sure that you complete the Texas Regional Service Designation form.)* ***In addition to this form, to be considered for a piggy-back award by the National Purchasing Cooperative, you must have an authorized representative sign the National Purchasing Cooperative Vendor Award Agreement that follows this page.***

If you serve different states for different products or services included in your Proposal, you must complete and submit a separate State Service Designation form for each group of products and clearly indicate the products or services to which the designation applies. **(Additional forms can be obtained by contacting bids@buyboard.com** ***at least five (5) business days prior to the Proposal Due Date.) By designating a state or states, you are certifying that you are authorized and willing to provide the proposed products and services in those states. Designating states in which you are either unable or unwilling to provide the specified products and services shall be grounds for either rejection of your Proposal or, if awarded, termination of your Contract.***

- I will service all states in the United States.
- I will not service all states in the United States.

Alabama
Alaska
Arizona
Arkansas
California (Public Contract Code 20118 & 20652)
Colorado
Connecticut
Delaware
District of Columbia
Florida
Georgia
Hawaii
Idaho
Illinois
Indiana
Iowa
Kansas
Kentucky
Louisiana
Maine
Maryland
Massachusetts
Michigan
Minnesota
Mississippi
Missouri
Montana
Nebraska
Nevada
New Hampshire
New Jersey
New Mexico
New York
North Carolina
North Dakota
Ohio
Oklahoma
Oregon
Pennsylvania
Rhode Island
South Carolina
South Dakota
Tennessee
Texas
Utah
Vermont
Virginia
Washington
West Virginia
Wisconsin
Wyoming

NATIONAL PURCHASING COOPERATIVE VENDOR AWARD AGREEMENT

In accordance with the Terms and Conditions associated with this Proposal Invitation, a contract awarded under this Proposal Invitation may be "piggy-backed" by another governmental entity. The National Purchasing Cooperative is an intergovernmental purchasing cooperative formed by certain school districts outside of Texas to serve its members throughout the United States. If you agree to be considered for a piggy-back award by the National Purchasing Cooperative, you agree to the following terms and agree to serve National Purchasing Cooperative members in the states you have indicated on the State Service Designation form, in your Proposal.

By signing this form, Proposer (referred to in this Agreement as "Vendor") agrees as follows:

1. Vendor acknowledges that if The Local Government Purchasing Cooperative ("Texas Cooperative") awards Vendor a contract under this Proposal Invitation ("Underlying Award"), the National Purchasing Cooperative ("National Cooperative") may - but is not required to - "piggy-back" on or re-award all or a portion of that Underlying Award ("Piggy-Back Award"). By signing this National Cooperative Vendor Award Agreement ("Agreement"), Vendor accepts and agrees to be bound by any such Piggy-Back Award as provided for herein.

2. In the event National Cooperative awards Vendor a Piggy-Back Award, the National Cooperative Administrator ("BuyBoard Administrator") will notify Vendor in writing of such Piggy-Back Award, which award shall commence on the effective date stated in the Notice and end on the expiration date of the Underlying Award, subject to annual renewals as authorized in writing by the BuyBoard Administrator. Vendor agrees that no further signature or other action is required of Vendor in order for the Piggy-Back Award and this Agreement to be binding upon Vendor. Vendor further agrees that no interlineations or changes to this Agreement by Vendor will be binding on National Cooperative, unless such changes are agreed to by its BuyBoard Administrator in writing.

3. Vendor agrees that it shall offer its goods and services to National Cooperative members at the same pricing and same general terms and conditions, subject to applicable state laws in the state of purchase, as required by the Underlying Award. However, nothing in this Agreement prevents Vendor from offering National Cooperative members better (i.e., lower) competitive pricing and more favorable terms and conditions than those in the Underlying Award.

4. Vendor hereby agrees and confirms that it will serve those states it has designated on the State Service Designation Form of this Proposal Invitation. Any changes to the states designated on the State Service Designation Form must be approved in writing by the BuyBoard Administrator.

5. Vendor agrees to pay National Cooperative the service fee provided for in the Underlying Award based on the amount of purchases generated from National Cooperative members through the Piggy-Back Award. Vendor shall remit payment to National Cooperative on such schedule as it specifies (which shall not be more often than monthly). Further, upon request, Vendor shall provide National Cooperative with copies of all purchase orders generated from National Cooperative members, vendor invoices, and/or such other documentation regarding those purchase orders as the Cooperative's administrators may require in their reasonable discretion for purposes of reviewing and verifying purchase activity. Vendor further agrees that National Cooperative shall have the right, upon reasonable written notice, to review Vendor's records pertaining to purchases made by National Cooperative members in order to verify the accuracy of service fees.

6. Vendor agrees that the Underlying Award, including its General Terms and Conditions, are adopted by reference to the fullest extent such provisions can reasonably apply to the post-proposal/contract award phase. The rights and responsibilities that would ordinarily inure to the Texas Cooperative pursuant to the Underlying Award shall inure to National Cooperative; and, conversely, the rights and responsibilities that would ordinarily inure to Vendor in the Underlying Award shall inure to Vendor in this Agreement. Vendor recognizes and agrees that Vendor and National Cooperative are the only parties to this Agreement, and that nothing in this Agreement has application to other third parties, including the Texas Cooperative. In the event of conflict between this Agreement and the terms of the Underlying Award, the terms of this Agreement shall control, and then only to the extent necessary to reconcile the conflict.

7. This Agreement shall be governed and construed in accordance with the laws of the State of Texas and venue for any dispute shall lie in the federal district court of Travis County, Texas.

8. Vendor acknowledges and agrees that the award of a Piggy-Back Award is within the sole discretion of National Cooperative, and that this Agreement does not take effect unless and until National Cooperative awards Vendor a Piggy-Back Award and the BuyBoard Administrator notifies Vendor in writing of such Piggy-Back Award as provided for herein.

WHEREFORE, by signing below Vendor agrees to the foregoing and warrants that it has the authority to enter into this Agreement.

Nueces Power Equipment	788-25
Name of Vendor	Proposal Invitation Number
Ben Hernandez	Ben Hernandez
Signature of Authorized Company Official	Printed Name of Authorized Company Official

07/07/2025
Date

LOCATION/AUTHORIZED SELLER LISTINGS

If you have more than one location/authorized seller that will service a Contract awarded under this Proposal Invitation, please list each location/authorized seller below. If additional sheets are required, please duplicate this form as necessary. NOTE: Awarded Vendors shall remain responsible for all aspects of the Contract, including processing of Purchase Orders, and shall be responsible for the performance of all locations and authorized sellers under and in accordance with the Contract. ***If you are a product manufacturer and wish to designate Designated Dealers as defined in the General Terms and Conditions to receive Cooperative member Purchase Orders on your behalf, you must complete the Manufacturer Designated Dealer form.***

Location/Authorized Seller Name	Contact Person	Contact Information (Mailing Address, Phone, Fax, Email)
Nueces Power Equipment	Ben Hernandez	7667 N. Sam Houston PKWY E Humble, TX 77396 713-247-0066 npesales@npetex.com
Nueces Power Equipment	Ben Hernandez	7510 IH-37 Access Rd Corpus Christi, TX 78409 361-289-0066 npesales@npetex.com
Nueces Power Equipment	Ben Hernandez	8241 S. Desert Blvd Vinton, TX 79821 915-541-0066 npesales@npetex.com
Nueces Power Equipment	Ben Hernandez	101 Oil Patch Rd Laredo, TX 78043 956-725-0066 npesales@npetex.com
Nueces Power Equipment	Ben Hernandez	4697 FM 1516 N Converse, TX 78109 210-310-0066 npesales@npetex.com
Nueces Power Equipment	Ben Hernandez	1 Industrial Way San Benito, TX 78586 956-361-0066 npesales@npetex.com
Nueces Power Equipment	Ben Hernandez	5201 Highway 59 N Victoria, TX 77901 361-576-0066 npesales@npetex.com
Nueces Power Equipment	Ben Hernandez	5909 TX-349 Midland, TX 79706 432-360-0066 npesales@npetex.com

P.O. Box 400, Austin, Texas 78767
800.695.2919 • bids@buyboard.com • buyboard.com

MANUFACTURER DEALER DESIGNATION

If Vendor is a manufacturer that sells products through a dealer network and wishes to designate a dealer or multiple dealers ("Designated Dealers") to receive Cooperative member Purchase Orders on Vendor's behalf, you must complete this form for each dealer you wish to designate.

Regardless of any Designated Dealers submitted by Vendor, Vendor specifically agrees and acknowledges that any such designations are for Vendor's convenience only and shall not, if Vendor is awarded a Contract, relieve Vendor of any obligations under the Contract, including payment of Cooperative service fees on all Purchase Orders submitted to Vendor or any Designated Dealer. In accordance with the General Terms and Conditions, an awarded Vendor shall remain responsible and liable for all of its obligations under the Contract and the performance of both Vendor and any of Vendor's Designated Dealers under and in accordance with the Contract and remain subject to all remedies for default thereunder, including, but not limited to suspension and termination of Vendor's Contract for nonpayment of service fees.

If awarded, Vendor authorizes the Cooperative, in its sole discretion, to list any Vendor Designated Dealers in the BuyBoard system and to receive Purchase Orders directly from Cooperative members on behalf of Vendor. To the extent a Vendor with Designated Dealers receives a Purchase Order directly, it shall be the responsibility of Vendor to appropriately process such Purchase Order in accordance with the Contract, including but not limited to timely forwarding such Purchase Order to a Designated Dealer for processing.

The Cooperative reserves the right, in its sole discretion, to refuse addition of, or request removal of, any Designated Dealer, and Vendor agrees to immediately require such Designated Dealer to cease accepting Purchase Orders or otherwise acting on Vendor's behalf under the Contract. Further, the Cooperative administrator shall be authorized to remove or suspend any or all Designated Dealers from the BuyBoard at any time in its sole discretion.

If you wish to designate a dealer to service a contract awarded under this Proposal Invitation, please list the Designated Dealer below. If you wish to designate multiple dealers, please duplicate this form as necessary.

Designated Dealer Name

Designated Dealer Contact Person

Designated Dealer Address

City

State

Zip Code

Phone Number

Fax Number

Email address

Designated Dealer Tax ID Number* **(*attach W-9)**

P.O. Box 400, Austin, Texas 78767
800.695.2919 • bids@buyboard.com • buyboard.com

PROPOSAL INVITATION QUESTIONNAIRE

The Cooperative will use your responses to the questions below in evaluating your Proposal and technical and financial resources to provide the goods and perform the services ("Work") under the BuyBoard contract contemplated by this Proposal Invitation ("Contract"). Proposers must fully answer each question, numbering your responses to correspond to the questions/numbers below. Proposers must complete below or attach your responses to this questionnaire and submit in one document with your Proposal. **You must submit the questionnaire and responses with your Proposal or the Proposal will not be considered.**

1. List the number of years Proposer has been in business and former business names (if applicable). Note whether your company is currently for sale or involved in any transaction that would significantly alter its business or result in acquisition by another entity.

Nueces Power Equipment has been in business since 1988, 37 years. The company is not currently for sale.

2. Describe the resources Proposer has to manage staff and successfully perform the Work contemplated under this Contract. State the number and summarize the experience of company personnel who may be utilized for the Work, including those who will be available to Cooperative members for assistance with project development, technical issues, and product selection for Work associated with this Contract.

Nueces Power Equipment employs nearly 200 employees. The majority of our workforce is technicians whose job it is to repair customer's equipment.

3. **Marketing Strategy:** For your Proposal to be considered, you must submit the Marketing Strategy you will use if the Cooperative accepts all or part of your Proposal. *(Example: Explain how your company will initially inform Cooperative members of your BuyBoard Contract, and how you will continue to support the BuyBoard for the duration of the Contract term.)* Attach additional pages if necessary.

The main source of our marketing efforts is our 18 sales representatives. their job is to go visit any and all governmental agencies. All of our reps are trained to suggest using Buyboard to transact equipment to these agencies.

4. Describe Proposer's financial capability to perform the Contract. State or describe the firm's financial strength and rating, bonding capacity, and insurance coverage limits. State whether the firm, or any of the firm's past or present owners, principal shareholders or stockholders, or officers, have been a debtor party to a bankruptcy, receivership, or insolvency proceeding in the last 7 years, and identify any such debtor party by name and relationship to or position with your firm.

Nueces Power Equipment has the financial measn necessary to provide for the service needs of our customers.

Our insurance coverage meets ad exceeds all requirements: E.G. $1Million in Worker's Compensation Limit

$1Million limit for Auto and General Liability, $5 Million in Umbrella Limits

5. Does your company have any outstanding financial judgments and/or is it currently in default on any loan or financing agreement? If so, provide detailed information on the nature of such items and prospects for resolution.

No

6. List all contracts, if any, in the last 10 years on which Proposer has defaulted, failed to complete or deliver the work, or that have been terminated for any reason. For each such contract, provide the project name, scope, value and date and the name of the procuring entity. Fully explain the circumstances of the default, failure to complete or deliver the work, or termination.

None

7. List all litigation or other legal proceedings (including arbitration proceedings), if any, in the last 10 years brought against your firm, or any of the firm's past or present owners, principal shareholders or stockholders, officers, agents or employees, that relate to or arise from a contract similar to this Contract or the Work contemplated under this Contract. Provide the style of the lawsuit or proceeding (name of parties and court or tribunal in which filed), nature of the claim, and resolution or current status.

None

Broce Broom

July 10, 2025

Ben Hernandez
Nueces Power & Equip

Dear Ben:

This letter will serve as authorization for Nueces Power & Equipment to sell "Pre-Owned/Reconditioned/Retired Rental" equipment as per Item 51 of BuyBoard Equipment Proposal Invitation No. 788-25 in the following Regions:

1, 2, 3, and 20

If you have any questions, please feel free to give me a call.

Sincerely,

Terry Wimer
Sr. VP Sales Operations
Broce Manufacturing Company, Inc.

Broce Broom

July 10, 2025

Ben Hernandez
Nueces Power & Equipment

Dear Ben:

I wanted to confirm that Nueces Power & Equipment is approved and authorized to sell, install, and service products sold to the TASB BuyBoard that are manufactured by Broce Manufacturing Company, Inc. This authorization applies to Contract number 788-25. This authorization is extended to the following TASB BuyBoard regions:

1, 2, 3, and 20

If you have any questions, please feel free to give me a call.

Sincerely,

Terry Wimer
Sr. VP Sales Operations
Broce Manufacturing Company, Inc.

April 11, 2025

BuyBoard
12007 Research Blvd.
PO Box 400
Austin, TX 78767-0400

RE: Case Construction Equipment Dealer for South Texas

MANUFACTURER'S AUTHORIZATION FORM

CNH Industrial America LLC ("CNH") is an established and reputable original equipment manufacturer of CASE branded construction equipment, and pursuant to a Case Construction Equipment Sales and Service Agreement has authorized Nueces Farm Center, Inc. ("Nueces Power Equipment") to sell, submit bids, and subsequently negotiate and sign contracts with you for new and used CASE branded construction equipment and parts manufactured by CNH for the following counties in south Texas:

Aransas	Goliad	Live Oak
Bee	Hidalgo	Nueces
Brewster	Hudspeth	Presidio
Brooks	Jackson	Refugio
Calhoun	Jeff Davis	San Patricio
Cameron	Jim Hogg	Star
Culberson	Jim Wells	Victoria
DeWitt	Kenedy	Webb
Duval	Kleberg	Willacy
El Paso	Lavaca	Zapata

CNH hereby extends its standard warranty and limitation of liability terms provided with all new CASE branded construction equipment and parts offered for supply by the above firm.

Signature: _____

[signature for and on behalf of Manufacturer]

CNH Industrial America LLC
621 State Street
Racine, WI 53402

HD HYUNDAI CONSTRUCTION EQUIPMENT NORTH AMERICA

6100 ATLANTIC BLVD. NORCROSS, GA. 30071
PHONE: (678) 823-7777
WWW.HCEAMERICAS.COM

July 14, 2025

Re: Dealer in Good Standing

To Whom This May Concern,

This letter is to confirm that **Nueces Power Equipment (NPE)** is a contracted dealer in good standing for **Sales (New and Used), Service, Parts, and Rental** for **HD Hyundai Construction Equipment North America (HCENA)**.

NPE's active trade area includes the following counties in the state of **Texas**:

Aransas	Atascosa	Bandera	Bee	Bexar	Blanco	Brewster
Brooks	Caldwell	Calhoun	Cameron	Comal	Crockett	Culberson
DeWitt	Dimmit	Duval	Edwards	El Paso	Frio	Gillespie
Goliad	Gonzales	Guadalupe	Hays	Hidalgo	Hudspeth	Jackson
Jeff Davis	Jim Hogg	Jim Wells	Karnes	Kendall	Kenedy	Kerr
Kimble	Kinney	Kleberg	La Salle	Lavaca	Live Oak	Llano
Mason	Maverick	McCulloch	McMullen	Medina	Menard	Nueces
Pecos	Presidio	Real	Reeves	Refugio	San Patricio	San Saba
Schleicher	Starr	Sutton	Terrell	Uvalde	Val Verde	Victoria
Webb	Willacy	Wilson	Zapata	Zavala		

Should you require an additional information or verification, please do not hesitate to reach out directly.

Best Regards,

Matt Gansser
Director of Distribution and Marketing
HD Hyundai Construction Equipment North America, Inc.
6100 Atlantic Blvd.
Norcross, Georgia 30071

Dale McLemore, Director of Sales

2004 Buck Lane

Lexington, KY 40511

July 11, 2025

The Local Government Purchasing
Cooperative 12007 Research Blvd.
Austin, Texas 78759

RE: Proposal #788-25

To Whom It May Concern,

We are pleased to confirm that Nueces Power Equipment with a HQ business address at 7510 I-37 Corpus Christi, TX 78409 is a non-exclusive distributor for LBX Co. LLC, authorized to sell Link-Belt Excavator products and provide service within the assigned territory of Texas.

Please contact the undersigned should you have any questions.

Regards,

Adam Craft

Adam Craft
Region Manager
South Central Region
LBX Co. LLC www.lbxco.com
Phone: 859-229-4741
Email: acraft@lbxco.com

Date: 7/17/2025

The Local Government Purchasing Cooperative.

Subject: Manufacturer Authorization Letter

We, **Skyjack, Inc.** located at **2525 Enterprise Circle West Chicago, IL 60185**, are the original manufacturer of Skyjack MEWP and Telehandlers.

This letter serves as official confirmation that we hereby authorize **Nueces Power Equipment and all branches** located at **7510 I-37, Corpus Christi**to act as our authorized distributor for the above-mentioned product(s) in the United States.

This authorization includes the rights to market, sell, and provide after-sales services for the products mentioned. We confirm that **Sunstate Equipment** is fully capable and equipped to provide the necessary support and service for our products. They are authorized to sell the full line of Skyjack products, including Vertical Mast, Scissor Lift, Boom Lift, and Telehandler. They are further authorized to sell and service across the state of Texas.

Should you require any further information or clarification, please do not hesitate to contact us.
Sincerely,

Matt Tavianini
V.P. Sales North America
Skyjack Inc.

_____
Signature

Skyjack Group
A Division of Linamar Holdings Inc.

Skyjack Equipment Services, Inc.
1600 Town Commons Drive, Suite 103
Howell, MI 48855
Tel: 517-579-2540
Fax: 517-579-2550
www.skyjack.com www.linamar.com

TAKEUCHI
From World First to World Leader

July, 10 2025

RE: Nueces Power Equipment, Inc.

The Local Government Purchasing Cooperative:

Nueces Power Equipment, Inc. is the assigned dealer for Takeuchi (U.S.), Ltd. For the location and surrounding areas listed, they are authorized to sell new and used Takeuchi machines, parts and provide warranty service. This is effective until further notice.

San Antonio, TX

For additional questions or needs, please feel free to contact me either by phone or email at Austin.Wells@takeuchi-us.com, 228-990-8098.

Thanks,

Austin Wells

Regional Business Manager

Takeuchi Mfg. (U.S.), Ltd.

July 11th, 2025

To the Local Government Purchasing Cooperative contract # 788-25

We hereby confirm that Nueces Farm Center, Inc. DBA Nueces Power Equipment located at 7510 I-37, Corpus Christi, TX 78409, is the authorized Wirtgen Group dealer for sales, service, and support for the following counties in the state of Texas:

Anderson, Angelina, Aransas, Atascosa, Austin, Bandera, Bastrop, Bee, Bell, Bexar, Blanco, Brazoria, Brazos, Brewster, Brooks, Burleson, Burnet, Caldwell, Calhoun, Cameron, Chambers, Cherokee, Colorado, Comal, Culberson, DeWitt, Dimmit, Duval, El Paso, Falls, Fayette, Fort Bend, Freestone, Frio, Galveston, Gillespie, Goliad, Gonzales, Grimes, Guadalupe, Hardin, Harris, Hays, Hidalgo, Houston, Hudspeth, Jackson, Jasper, Jeff Davis, Jefferson, Jim Hogg, Jim Wells, Karnes, Kendall, Kenedy, Kerr, Kinney, Kleberg, La Salle, Lavaca, Lee, Leon, Liberty, Limestone, Live Oak, Llano, Loving, Madison, Matagorda, Maverick, McMullen, Medina, Milam, Montgomery, Nacogdoches, Newton, Nueces, Orange, Pecos, Polk, Presidio, Real, Reeves, Refugio, Robertson, Sabine, San Augustine, San Jacinto, San Patricio, Starr, Travis, Trinity, Tyler, Uvalde, Victoria, Walker, Waller, Washington, Webb, Wharton, Willacy, Williamson, Wilson, Zapata, and Zavala.

Should you require further information, please do not hestitate to contact me at (615) 501- 0600, ext. -412 , or e-mail sandy.draper@wirtgen-group.com.

Best regards,

Sandy Draper
Director, Inside Sales Operations

WIRTGEN AMERICA
6030 Dana Way, Antioch, TN 37013
Phone: (615) 501-0600 | Fax: (615) 501-0691
www.wirtgen-group.com/america

PROPOSAL SPECIFICATION SUMMARY

The categories and items specified for this Proposal Invitation are summarized below. For full Proposal Specifications, you must review and complete the Proposal Specification information in the electronic proposal submission system in accordance with the Instructions to Proposers (or, if submitting a hard copy Proposal, timely request and complete the Proposal Specification Form in accordance with the Instructions to Proposers).

PROPOSAL NOTE 1: Vendors shall submit catalog(s)/price list(s) with their Proposal response or the Proposal will not be considered. Vendors shall submit catalog(s)/price list(s) with the Proposal in a readily available and readable electronic format, with Excel or searchable PDF preferred. ***No paper catalogs or manufacturer/vendor websites will be accepted.***

PROPOSAL NOTE 2: A Vendor proposing shall be approved and authorized by the manufacturer to sell, install, and service the brand(s) of product(s) proposed. Proposers responding to this Proposal Invitation shall submit an approval letter from each manufacturer for each product line proposed. The requirement to provide an approval letter from the manufacturer applies to both seller and installers. Manufacturers responding directly to this Proposal Invitation, in lieu of an authorization letter, shall submit a written explanation that the company is the manufacturer of the product line(s) proposed. Dealer authorization agreements will not be accepted as a substitute for the manufacturer authorization letter.

The manufacturer authorization letters must include the following:
1. Composed on manufacturer letterhead (an email message is not a substitute for the letter),
2. Addressed to "The Local Government Purchasing Cooperative",
3. Dated within the current calendar year,
4. List the regions in Texas and states that Vendor is authorized to sell, install, and service product(s) proposed, and
5. Name, Title, and Signature of Authorized Official from Manufacturer.

PROPOSAL NOTE 3: **"Pre-Owned/Reconditioned/Retired Rental"** shall be defined as equipment having been checked and inspected by a manufacturer-authorized dealer prior to sale and shall be no older than sixty (60) months as of the date of delivery. Proposers responding to this Proposal Invitation for **"Pre-Owned/Reconditioned/Retired Rental"** equipment must also be approved by the manufacturer to sell pre-owned/reconditioned/retired rental equipment for the brand submitted and must submit an approval letter from each manufacturer with the Proposal. Manufacturer authorization letters must include the regions in which equipment can be sold. Equipment listed as **"Pre-Owned/Reconditioned/Retired Rental"** shall be in good and working condition and shall include a minimum warranty of one-hundred eighty (180) days against any defect from workmanship and parts and shall cover equipment repairs and/or component replacement. Total equipment usage hours as displayed on the service meter will have a maximum of one thousand (1,000) hours per year of age and a minimum of seventy-five percent (75%) of wear remaining for tires, track, and/or ground engagement tools.

Section I: New Construction, Road, Bridge and Repair Equipment-PURCHASE ONLY
1. Discount (%) off catalog/pricelist for **Air Compressors (Truck or Trailer Mounted), Accessories and Attachments.**
2. Discount (%) off catalog/pricelist for **Articulated Trucks, Accessories and Attachments.**
3. Discount (%) off catalog/pricelist for **Asphalt Compactors, Accessories and Attachments.**
4. Discount (%) off catalog/pricelist for **Asphalt Cutters, Accessories and Attachments.**
5. Discount (%) off catalog/pricelist for **Asphalt Distributors, Accessories and Attachments.**
6. Discount (%) off catalog/pricelist for **Asphalt Emulsion Tanks, Accessories and Attachments.**
7. Discount (%) off catalog/pricelist for **Asphalt Pavers, Accessories and Attachments.**
8. Discount (%) off catalog/pricelist for **Backhoe/Loaders, Accessories and Attachments.**
9. Discount (%) off catalog/pricelist for **Chip Spreaders, Accessories and Attachments.**
10. Discount (%) off catalog/pricelist for **Cold Planers, Accessories and Attachments.**
11. Discount (%) off catalog/pricelist for **Conveyors, Accessories and Attachments.**
12. Discount (%) off catalog/pricelist for **Curb and Gutter Machines, Accessories and Attachments.**
13. Discount (%) off catalog/pricelist for **Forklifts, Accessories and Attachments.**

14. Discount (%) off catalog/pricelist for **Generator Equipment and Electrical Systems, Accessories and Attachments.**
15. Discount (%) off catalog/pricelist for **Hydraulic Hammers, Accessories and Attachments.**
16. Discount (%) off catalog/pricelist for **Integrated Tool Carriers, Accessories and Attachments.**
17. Discount (%) off catalog/pricelist for **Jack Hammers, Accessories and Attachments.**
18. Discount (%) off catalog/pricelist for **Knuckle Boom Loaders, Accessories and Attachments.**
19. Discount (%) off catalog/pricelist for **Material Handling Equipment, Accessories and Attachments.**
20. Discount (%) off catalog/pricelist for **Melter Crack Sealers** (Truck or Trailer Mounted)**, Accessories and Attachments.**
21. Discount (%) off catalog/pricelist for **Mini Excavators, Accessories and Attachments.**
22. Discount (%) off catalog/pricelist for **Motor Graders, Accessories and Attachments.**
23. Discount (%) off catalog/pricelist for **Multi Terrain Loaders, Accessories and Attachments.**
24. Discount (%) off catalog/pricelist for **Paving Breakers and Milling Machines, Accessories and Attachments.**
25. Discount (%) off catalog/pricelist for **Pipelaying Equipment, Accessories and Attachments.**
26. Discount (%) off catalog/pricelist for **Pneumatic Compactors and Rollers, Accessories and Attachments.**
27. Discount (%) off catalog/pricelist for **Pothole Patchers** (Trailer or Truck Mounted)**, Accessories and Attachments.**
28. Discount (%) off catalog/pricelist for **Road Broom Equipment, Accessories and Attachments.**
29. Discount (%) off catalog/pricelist for **Road Reclaiming Equipment, Accessories and Attachments.**
30. Discount (%) off catalog/pricelist for **Scrapers, Accessories and Attachments.**
31. Discount (%) off catalog/pricelist for **Skid Steer Loaders, Accessories and Attachments.**
32. Discount (%) off catalog/pricelist for **Soil Stabilizing Equipment, Accessories and Attachments.**
33. Discount (%) off catalog/pricelist for **Telescopic Handlers, Accessories and Attachments.**
34. Discount (%) off catalog/pricelist for **Track Loaders, Accessories and Attachments.**
35. Discount (%) off catalog/pricelist for **Track and Wheel Material Handlers, Accessories and Attachments.**
36. Discount (%) off catalog/pricelist for **Track-Type Tractors and Dozers, Accessories and Attachments.**
37. Discount (%) off catalog/pricelist for **Tracked Excavators, Accessories and Attachments.**
38. Discount (%) off catalog/pricelist for **Trommel Screen Equipment and Compost Turners, Accessories and Attachments.**
39. Discount (%) off catalog/pricelist for **Truck Mounted Excavators, Accessories and Attachments.**
40. Discount (%) off catalog/pricelist for **All Types of Truck Mounted Aerial Lifts, Accessories and Attachments** (telescopic, cable handler, digger/hydraulic derrick, and related aerial lifts).
41. Discount (%) off catalog/pricelist for **Utility Vehicles, Accessories and Attachments.**
42. Discount (%) off catalog/pricelist for **Vibratory Soil Compactors and Rollers, Accessories and Attachments.**
43. Discount (%) off catalog/pricelist for **Waste Handling Wheel Loaders and Landfill Compactors, Accessories and Attachments.**
44. Discount (%) off catalog/pricelist for **Wheel Dozers, Accessories and Attachments.**
45. Discount (%) off catalog/pricelist for **Wheel Excavators, Accessories and Attachments.**
46. Discount (%) off catalog/pricelist for **Wheel Loaders, Accessories and Attachments.**
47. Discount (%) off catalog/pricelist for **Heavy Duty Paint Striping Equipment, Accessories and Attachments.**
48. Discount (%) off catalog/pricelist for **All Other Construction, Road, Bridge, Other Equipment, Accessories and Attachments.**
49. Discount (%) off catalog/pricelist for **Repair Parts on All Types of Construction, Road, Bridge, and Other Equipment.**

Section II: Construction, Road, Bridge, and Repair Equipment-RENTAL ONLY (Rental Rate Sheet must be submitted with Proposal or Proposal will not be considered.)

50. Discount (%) off catalog/pricelist for **RENTAL of All Construction, Road, Bridge, Other Equipment, Accessories and Attachments.**

Section III: Construction, Road, Bridge, and Repair Equipment (Pre-Owned/Reconditioned/Retired Rental)**-PURCHASE ONLY**

51. Discount (%) off catalog/pricelist for **All Types of Pre-Owned/Reconditioned/Retired Rental Construction, Road, Bridge, Other Equipment, Accessories and Attachments.**

Section IV: Street Sweepers, Sand/Salt Spreading, Snowplows and Deicing Road and Bridge Equipment-PURCHASE ONLY

52. Discount (%) off catalog/pricelist for **Broom Street Sweepers, Accessories and Attachments.**
53. Discount (%) off catalog/pricelist for **Air Street Sweepers, Accessories and Attachments.**
54. Discount (%) off catalog/pricelist for **Regenerative Air Street Sweepers, Accessories and Attachments.**
55. Discount (%) off catalog/pricelist for **Waterless Street Sweepers, Accessories and Attachments.**
56. Discount (%) off catalog/pricelist for **Alternative Fuel Street Sweepers, Accessories and Attachments.**
57. Discount (%) off catalog/pricelist for **All Types of Mounted Sand and Salt Spreading Equipment, Accessories and Attachments** (Pick-Up, Utility, Heavy-Duty, or Tailgate).
58. Discount (%) off catalog/pricelist for **Pre-Wetting Equipment, Accessories and Attachments.**
59. Discount (%) off catalog/pricelist for **Snowplow Equipment, Accessories and Attachments.**
60. Discount (%) off catalog/pricelist for **Deicing Equipment, Accessories and Attachments.**
61. Discount (%) off catalog/pricelist for **All Other Types of Street Sweeper, Sand/Salt Spreading, Snowplows and Deicing Equipment, Accessories and Attachments.**
62. Discount (%) off catalog/pricelist for **Repair Parts on All Types of Street Sweepers, Sand/Salt Spreading, Snowplows, Deicing, and Other Related Equipment, Accessories and Attachments.**

Section V: Street Sweepers, Sand/Salt Spreading, Snowplows and Deicing Road and Bridge Equipment-RENTAL ONLY (Rental Rate Sheet must be submitted with Proposal or Proposal will not be considered.)

63. Discount (%) off catalog/pricelist for **RENTAL of All Street Sweepers, Sand/Salt Spreading, Snowplows and Deicing Road and Bridge Equipment, Accessories and Attachments.**

Section VI: Street Sweepers, Sand/Salt Spreading, Snowplows and Deicing Road and Bridge Equipment (Pre-Owned/Reconditioned/Retired Rental)**-PURCHASE ONLY**

64. Discount (%) off catalog/pricelist for **All Types of Pre-Owned/Reconditioned/Retired Rental Street Sweepers, Sand/Salt Spreading, Snowplows and Deicing Road and Bridge Equipment, Accessories and Attachments.**

Section VII: Soil and Road Chemical Polymers

65. Discount (%) off catalog/pricelist for **Chemical Base Polymers and Stabilizer for Soil and Road** (used for soil/road to provide a chemical bond joining particles into formation).

Section VIII: Installation and Repair Service

66. Discount (%) off catalog/pricelist for **Maintenance Services** (monthly, quarterly, and/or yearly) of **Construction, Road and Bridge, Street Sweepers, Sand/Salt Spreading, Snowplows, Deicing and Other Equipment.**
67. **Hourly Labor Rate for Installation/Repair Service on All Types of Construction, Road, Bridge and Other Equipment** - Not to Exceed hourly labor rate for Installation/Repair Service of Equipment and Products.
68. **Hourly Labor Rate for Installation/Repair Service on All Types of Street Sweepers, Sand/Salt Spreading, Snowplows, Deicing and Other Equipment** - Not to Exceed hourly labor rate for Installation/Repair Service of Equipment and Products.

P.O. Box 400, Austin, Texas 78767
800.695.2919 • bids@buyboard.com • buyboard.com

REQUIRED FORMS CHECKLIST

(Please check (√) the following)

☒ Reviewed/Completed: **Proposer's Acceptance and Agreement**

PROPOSAL FORMS PART 1: COMPLIANCE FORMS

☒ Reviewed/Completed: **Proposal Acknowledgements**
☒ Reviewed/Completed: **Felony Conviction Disclosure**
☒ Reviewed/Completed: **Resident/Nonresident Certification**
☒ Reviewed/Completed: **Debarment Certification**
☒ Reviewed/Completed: **Vendor Employment Certification**
☒ Reviewed/Completed: **No Boycott Verification**
☒ Reviewed/Completed: **No Excluded Nation or Foreign Terrorist Organization Certification**
☒ Reviewed/Completed: **Historically Underutilized Business Certification**
☒ Reviewed/Completed: **Acknowledgement of BuyBoard Technical Requirements**
☒ Reviewed/Completed: **Construction-Related Goods and Services Affirmation**
☒ Reviewed/Completed: **Deviation and Compliance**
☒ Reviewed/Completed: **Vendor Consent for Name Brand Use**
☒ Reviewed/Completed: **Confidential/Proprietary Information**
☒ Reviewed/Completed: **EDGAR Vendor Certification**
☒ Reviewed/Completed: **Compliance Forms Signature Page**

PROPOSAL FORMS PART 2: VENDOR INFORMATION FORMS

☒ Reviewed/Completed: **Vendor Business Name**
☒ Reviewed/Completed: **Vendor Contact Information** (*complete in electronic proposal submission system)*
☒ Reviewed/Completed: **Federal and State/Purchasing Cooperative Experience**
☒ Reviewed/Completed: **Governmental References**
☒ Reviewed/Completed: **Company Profile**
☒ Reviewed/Completed: **Texas Regional Service Designation** (*complete in electronic proposal submission system)*
☒ Reviewed/Completed: **State Service Designation** (*complete in electronic proposal submission system)*
☒ Reviewed/Completed: **National Purchasing Cooperative Vendor Award Agreement** *(Vendors serving outside Texas only)*
☒ Reviewed/Completed: **Local/Authorized Seller Listings**
☒ Reviewed/Completed: **Manufacturer Dealer Designation**
☒ Reviewed/Completed: **Proposal Invitation Questionnaire**
☒ Reviewed/Completed: **Proposal Specifications** *with Discount (%) off Catalog/Pricelist and/or other required pricing information including Catalogs/Pricelists (or no bid response) and* ***Manufacturer Authorization Letters*** *shall be submitted with the Proposal or the Proposal will not be considered.*

NPE Information

Contact:	Carla Strasheim
Address:	P.O. Box 4789 Corpus Christi, TX 78469
Phone:	(361) 289-0066
Fax:	(361) 289-7424
Toll Free:	(361) 289-0066
Email:	carla@npetex.com
Web Address:	nuecespower.com

By submitting your response, you certify that you are authorized to represent and bind your company.

Ben Hernandez
Signature

ben@npetex.com
Email

Submitted at 7/17/2025 01:22:46 PM (CT)

Requested Attachments

Company Profile

Nueces Power Equipment Company Profile.docx

REQUIRED-Information on awarded Cooperative Contracts is available to Cooperative Members on the BuyBoard website. If your company is awarded a Contract under this Proposal Invitation, please provide a brief company description that you would like to have included with your company profile on the BuyBoard website. Submit your company profile in a separate file, in **Word format**, with your Proposal. *(Note: Vendor is solely responsible for any content provided for inclusion on the BuyBoard website. The Cooperative reserves the right to exclude or remove any content in its sole discretion, with or without prior notice, including but not limited to any content deemed by the Cooperative to be inappropriate, irrelevant to the Contract, inaccurate, or misleading.)* (**DO NOT** password protect uploaded files.)

Manufacturer Authorization Letter(s)

Nueces Buy Board Authorization - Case.pdf

A Vendor proposing shall be approved and authorized by the manufacturer to sell, install, and service the brand(s) of product(s) proposed. Proposers responding to this Proposal Invitation shall submit an approval letter from each manufacturer for each product line proposed. The requirement to provide an approval letter from the manufacturer applies to both seller and installers. Manufacturers responding directly to this Proposal Invitation, in lieu of an authorization letter, shall submit a written explanation that the company is the manufacturer of the product line(s) proposed. Dealer authorization agreements will not be accepted as a substitute for the manufacturer authorization letter.

The manufacturer authorization letters must include the following:
1. Composed on manufacturer letterhead (an email message is not a substitute for the letter),
2. Addressed to “The Local Government Purchasing Cooperative”,
3. Dated within the current calendar year,
4. List the regions in Texas and states that Vendor is authorized to sell, install, and service product(s) proposed, and
5. Name, Title, and Signature of Authorized Official from Manufacturer.

BuyBoard Proposal Invitation No. 788-25 - Construction, Road and Bridge, and Other Related Equipment

Proposal No. 788-25 (1)-2.pdf

REQUIRED-In PDF format, upload all COMPLETED and FILLED in proposal invitation documents available for download at www.buyboard.com.vendor including any additional pages, as necessary. NOTICE: DO NOT complete proposal forms in internet browser. No data will be stored. Download file to computer and complete proposal forms prior to submitting. (**DO NOT** password protect uploaded files.)

Exceptions and/or Detailed Information Related to Discount % and/or Hourly Labor Rate Proposed *No response*

In PDF format and if necessary, vendor shall attach detailed information regarding exceptions to pricing and/or discount percentage and define the services that are proposed to be provided. NOTE: IF DETAILED INFORMATION IS NOT SUBMITTED, PROPOSAL MAY NOT BE CONSIDERED. (**DO NOT** password protect uploaded files.)

Manufacturer Catalog(s) and/or Product Price list(s) Broce Price List.pdf

REQUIRED-In **PDF format ONLY,** upload manufacturer catalog(s) and/or product price list(s) in accordance with proposal invitation instructions. Vendors shall submit catalog(s)/price list(s) with their Proposal response or Proposal will not be considered. No paper catalogs or manufacturer/vendor websites will be accepted. File size must not exceed 250MB. (**DO NOT** password protect uploaded files.)

IRS Form W-9 Request for Taxpayer Identification Number and Certification 2025 W-9 NPE.pdf

REQUIRED-In PDF format, upload W-9 form. (**DO NOT** password protect uploaded files.)

Response Attachments

Linkbelt Price List.pdf

Linkbelt Price List

Takeuchi Price book.pdf

Takeuchi Price Book

Case Backhoe Price Book.pdf

Case Backhoe Price Book

Case Compact Wheel Loader Price Book.pdf

Case Compact Wheel Loader Price Book

Case Compaction Price Book.pdf

Case Compaction Price Book

Case CTL Price Book.pdf

Case CTL Price Book

Case Dozer Price Book.pdf

Case Dozer Price Book

Case Dozer UT Price Book.pdf

Case Dozer UT Price Book

Case Excavator Price Book.pdf

Case Excavator Price Book

Case Forklift Price Book.pdf

Case Forklift Price Book

Case Grader Price Book.pdf

Case Grader Price Book

Case Midi Excavator Price Book.pdf

Case Midi Excavator Price Book

Case Mini Excavator Price Book.pdf

Case Mini Excavator Price Book

Case MTL Price Book.pdf

Case MTL Price Book

Case SAL Price Book.pdf

Case SAL Price Book

Case SSL Price Book.pdf

Case SSL Price Book

Case Wheel Loader Price Book.pdf

Case Wheel Loader Price Book

Case Wheeled Excavator Price Book.pdf

Case Wheeled Excavator

NPE Texas Buy Board Approval letter LBX.pdf

NPE Texas Buy Board Approval Letter Linkbelt

Takeuchi - NPE- Buy Board Letter.pdf

Takeuchi Buyboard Approval letter

Nueces Power-TASBY Authorizations-7-10-25 Broce.pdf

Broce Buyboard Authorization letters

2025 NPE Rental Rate Sheet.xls

2025 NPE Rental Rate Sheet

Authorization Letter - Wirtgen.pdf

Authorization Letter - Wirtgen

HCENA Letter of Good Standing_NPE - Hyundai.pdf

Hyundai Authorization Letter

Hyundai Price List.pdf

Hyundai Price List

Used Price Evaluation - 2025 Buyboard.xlsx

Used Equipment Price List- Case, Liebherr, Hyundai, Wirtgen, Hamm, Takeuchi, Broce

Skyjack Price Book.pdf

Skyjack Price Book

NPE-Dealer Letter Skyjack.pdf

Skyjack Authorization Letter

Bid Attributes

1	**Name of Proposing Company (Legal Name)** By submitting a Proposal, Vendor is seeking to enter into a legal contract with the Cooperative. As such, Vendor must be an individual or legal business entity capable of entering into a binding contract. List the **LEGAL NAME** of the company seeking to contract with the Cooperative. Do **NOT** list an assumed name, dba, aka, etc. here. Such information may be provided below. Nueces Farm Center, Inc.
2	**Vendor Business Name** Name by which Vendor, if awarded, wishes to be identified on the BuyBoard. If different than the Name of Proposing Company listed above, only valid trade names (dba, aka, etc.) of the Proposing Company may be used. Nueces Power Equipment

3	**Vendor Mailing/Street Address** Vendor Mailing/Street Address 7510 IH 37 Access Road
4	**Vendor Mailing/Street Address - City** Vendor Mailing/Street Address - City Corpus Christi
5	**Vendor Mailing/Street Address - State** Vendor Mailing/Street Address - State (Abbreviate State Name) TX
6	**Vendor Mailing/Street Address - Zip Code** Vendor Mailing/Street Address - Zip Code 78409
7	**Federal Identification Number** Federal Identification Number 74-1649707
8	**No Boycott Verification/No Excluded Nation or Foreign Terrorist Organization Certification/Historically Underutilized Business Certification** No Boycott Verification/No Excluded Nation or Foreign Terrorist Organization Certification/Historically Underutilized Business Certification

9	**No Boycott Certification** A Texas governmental entity may not enter into a contract with a value of $100,000 or more that is to be paid wholly or partly from public funds with a company (excluding a sole proprietorship) that has 10 or more full-time employees for goods or services unless the contract contains a written verification from the company that it: (1) does not boycott Israel and will not boycott Israel during the term of the contract (TEX. GOV'T CODE Ch. 2271), (2) does not boycott energy companies and will not boycott energy companies during the term of the contract (TEX. GOV'T CODE Ch. 2276), and (3) does not have a practice, policy, guidance, or directive that discriminates against a firearm entity or firearm trade association and will not discriminate during the term of the contract against a firearm entity or firearm trade association (TEX. GOV'T CODE Ch. 2274). Accordingly, this certification form is included to the extent required by law. "Boycott Israel" means refusing to deal with, terminating business activities with, or otherwise taking any action that is intended to penalize, inflict economic harm on, or limit commercial relations specifically with Israel, or with a person or entity doing business in Israel or in an Israeli-controlled territory, but does not include an action made for ordinary business purposes. TEX. GOV'T CODE §808.001(1). "Boycott energy company" means, without an ordinary business purpose, refusing to deal with, terminating business activities with, or otherwise taking any action that is intended to penalize, inflict economic harm on, or limit commercial relations with a company because the company: (A) engages in the exploration, production, utilization, transportation, sale, or manufacturing of fossil fuel-based energy and does not commit or pledge to meet environmental standards beyond applicable federal and state law; or (B) does business with a company described by Paragraph (A). TEX. GOV'T CODE §809.001(1). "Discriminate against a firearm entity or firearm trade association" means, (A) with respect to the entity or association, to: (i) refuse to engage in the trade of any goods or services with the entity or association based solely on its status as a firearm entity or firearm trade association; (ii) refrain from continuing an existing business relationship with the entity or association based solely on its status as a firearm entity or firearm trade association; or (iii) terminate an existing business relationship with the entity or association based solely on its status as a firearm entity or firearm trade association; and (B) does not include: (i) the established policies of a merchant, retail seller, or platform that restrict or prohibit the listing or selling of ammunition, firearms, or firearm accessories; and (ii) a company's refusal to engage in the trade of any goods or services, decision to refrain from continuing an existing business relationship, or decision to terminate an existing business relationship: (aa) to comply with federal, state, or local law, policy, or regulations or a directive by a regulatory agency; or (bb) for any traditional business reason that is specific to the customer or potential customer and not based solely on an entity's or association's status as a firearm entity or firearm trade association. TEX. GOV'T CODE §2274.001(3). By signature on the Compliance Forms Signature Page, to the extent applicable, I certify and verify that Vendor does not boycott Israel, boycott energy companies, or discriminate against a firearm entity or firearm trade association and will not do so during the term of any contract awarded under this Proposal Invitation, that this certification is true, complete and accurate, and that I am authorized by my company to make this certification. Yes
10	**No Excluded Nation or Foreign Terrorist Organization Certification** Chapter 2252 of the Texas Government Code provides that a Texas governmental entity may not enter into a contract with a company engaged in active business operations with Sudan, Iran, or a foreign terrorist organization – specifically, any company identified on a list prepared and maintained by the Texas Comptroller under Texas Government Code §§806.051, 807.051, or 2252.153. (A company that the U.S. Government affirmatively declares to be excluded from its federal sanctions regime relating to Sudan, Iran, or any federal sanctions regime relating to a foreign terrorist organization is not subject to the contract prohibition.) By signature on the Compliance Forms Signature Page, I certify and verify that Vendor is not on the Texas Comptroller's list identified above; that this certification is true, complete and accurate; and that I am authorized by my company to make this certification. Yes

11 **Historically Underutilized Business Certification**

A Proposer that has been certified as a Historically Underutilized Business (also known as a Minority/Women Business Enterprise or "MWBE" and all referred to in this form as a "HUB") is encouraged to indicate its HUB certification status when responding to this Proposal Invitation. The BuyBoard website will indicate HUB certifications for awarded Vendors that properly indicate and document their HUB certification on this form.

I certify that my company has been certified as a MWBE/HUB in the following categories: *(Please check all that apply)*

12 **Minority Owned Business**

Minority Owned Business

☐ *Minority Owned Business*

13 **Women Owned Business**

Women Owned Business

☐ *Women Owned Business*

14 **Service-Disabled Veteran Owned Business**

Service-Disabled Veteran Owned Business (veteran defined by 38 U.S.C. §101(2), who has a service-connected disability as defined by 38 U.S.C. § 101(16), and who has a disability rating of 20% or more as determined by the U. S. Department of Veterans Affairs or Department of Defense)

☐ *Service-Disabled Veteran Owned Business*

15 **Certification Number**

Certification Number

No response

16 **Name of Certifying Agency**

Certifying Agency

No response

17 **Non-MWBE/HUB**

My company has NOT been certified as a MWBE/HUB

☑ Non-HUB

18 **Vendor General Contact Information**

Proposal/Contract General Contact Information

19 **Vendor Proposal/Contract Contact - First Name**

Vendor Proposal/Contract Contact - First Name

Ben

20 **Vendor Proposal/Contract Contact - Last Name**

Vendor Proposal/Contract Contact - Last Name

Hernandez

21 **Vendor Proposal/Contract Contact E-mail Address**

Vendor Proposal/Contract Contact E-mail Address

ben@npetex.com

22 **Vendor Proposal/Contract Mailing Address**

Vendor Proposal/Contract Mailing Address

5201 US Hwy 59 N

23 **Vendor Proposal/Contact Mailing Address - City**

Vendor Proposal/Contact Mailing Address - City

Victoria

24 **Vendor Proposal/Contact Mailing Address - State**

Vendor Proposal/Contact Mailing Address - State (Abbreviate State Name)

TX

25 **Vendor Proposal/Contact Mailing Address - Zip Code**

Vendor Proposal/Contact Mailing Address - Zip Code

77905

26 **Vendor Proposal/Contact Phone Number**

Vendor Proposal/Contact Phone Number (xxx-xxx-xxxx)

361-576-0066

27 **Vendor Proposal/Contact Extension Number**

Vendor Proposal/Contact Extension Number

No response

28 **Company Website**

Company Website (www.XXXXX.com)

www.nuecespower.com

29 **Purchase Orders Contact Information**

All Purchase Orders from Cooperative members will be available through the Internet. Vendors need Internet access and at least one e-mail address so that notification of new orders can be sent to the Internet contact when a new purchase order arrives. An information guide will be provided to Vendors to assist them with retrieving their orders.

Please select options below for receipt of Purchase Orders and provide the requested information:

- I will use the internet to receive Purchase Orders at the following address

Yes

30 **Purchase Order E-mail Address**

Purchase Order E-mail Address

stacy@npetex.com

31 **Purchase Order Contact - First Name**

Purchase Order Contact - First Name

Stacy

32 **Purchase Order Contact - Last Name**

Purchase Order Contact - Last Name

Terrell

33 **Purchase Order Contact Phone Number**

Purchase Order Contact Phone Number (xxx-xxx-xxxx)

361-289-0099

34 **Purchase Order Contact Extension Number**

Purchase Order Contact Extension Number

No response

35 **Alternate Purchase Order E-mail Address**

Alternate Purchase Order E-mail Address

carla@npetex.com

36 **Alternate Purchase Order Contact - First Name**

Alternate Purchase Order Contact - First Name

Carla

37 **Alternate Purchase Order Contact - Last Name**

Alternate Purchase Order Contact - Last Name

Strasheim

38 **Alternate Purchase Order Contact Phone Number**

Alternate Purchase Order Contact Phone Number (xxx-xxx-xxxx)

361-289-0066

39 **Alternate Purchase Order Contact Extension Number**

Alternate Purchase Order Contact Extension Number

No response

40 **Purchase Orders Contact Information**

All Purchase Orders from Cooperative members will be available through the Internet. Vendors need Internet access and at least one e-mail address so that notification of new orders can be sent to the Internet contact when a new purchase order arrives. An information guide will be provided to Vendors to assist them with retrieving their orders.

Please select options below for receipt of Purchase Orders and provide the requested information:

- Purchase Orders may be received by the Designated Dealer(s) identified on my company's Dealer Designation form as provided to the Cooperative administrator. I understand that my company shall remain responsible for the Contract and the performance of all Designated Dealers under and in accordance with the Contract.

Yes

41 **Request for Quotes (RFQ)**

Cooperative members will send RFQs to you by e-mail. Please provide e-mail addresses for the receipt of RFQs:

42 **Request for Quote (RFQ) E-mail Address**

Request for Quote (RFQ) E-mail Address

stacy@npetex.com

43 **Request for Quote (RFQ) Contact - First Name**

Request for Quote (RFQ) Contact - First Name

Stacy

44 **Request for Quote (RFQ) Contact - Last Name**

Request for Quote (RFQ) Contact - Last Name

Terrell

45 **Request for Quote (RFQ) Contact Phone Number**

Request for Quote (RFQ) Contact Phone Number (xxx-xxx-xxxx)

361-289-0066

46 **Request for Quote (RFQ) Contact Extension Number**

Request for Quote (RFQ) Contact Extension Number

No response

47 **Alternate Request for Quote (RFQ) E-mail Address**

Alternate Request for Quote (RFQ) E-mail Address

carla@npetex.com

48 **Alternate Request for Quote (RFQ) Contact - First Name**

Alternate Request for Quote (RFQ) Contact - First Name

Carla

49 **Alternate Request for Quote (RFQ) Contact - Last Name**

Alternate Request for Quote (RFQ) Contact - Last Name

Strasheim

50 **Alternate Request for Quote (RFQ) Contact Phone Number**

Alternate Request for Quote (RFQ) Contact Phone Number (xxx-xxx-xxxx)

361-289-0066

51 **Alternate Request for Quote (RFQ) Contact Extension Number**

Alternate Request for Quote (RFQ) Contact Extension Number

No response

52 **Invoices**

Your company will be billed monthly for the service fee due under a Contract awarded under this Proposal Invitation. **All invoices are available on the BuyBoard website and e-mail notifications will be sent when they are ready to be retrieved**.

53 **Invoices**

Please choose only one (1) of the following options for receipt of invoices and provide the requested information:

(a) Service fee invoices and related communications should be provided directly to my company at:

or

(b) In lieu of my company, I request and authorize all service fee invoices to be provided directly to the following billing agent:

If Vendor authorizes a billing agent to receive and process service fee invoices, in accordance with the General Terms and Conditions of the Contract, Vendor specifically acknowledges and agrees that nothing in that designation shall relieve Vendor of its responsibilities and obligations under the Contract including, but not limited to, payment of all service fees under any Contract awarded Vendor.

Service fee invoices and notices direct to company

54 **Invoice Company Name**

Invoice Company Name

Nueces Power Equipment

55 **Invoice Company Department Name**

Invoice Company Department Name

Accounting

56 **Invoice Contact - First Name**

Invoice Contact - First Name

Carla

57 **Invoice Contact - Last Name**

Invoice Contact - Last Name

Strasheim

58 **Invoice Mailing Address**

Invoice Mailing Address (P.O. Box or Street Address)

P.O. Box 4789

59 **Invoice Mailing Address - City**

Invoice Mailing Address - City

Corpus Christi

60 **Invoice Mailing Address - State**

Invoice Mailing Address - State (Abbreviate State Name)

TX

61 **Invoice Mailing Address - Zip Code**

Invoice Mailing Address (Zip Code)

78469

62 **Invoice Contact Phone Number**

Invoice Contact Phone Number (xxx-xxx-xxxx)

361-289-0066

63 **Invoice Contact Extension Number**

Invoice Contact Extension Number

No response

64 **Invoice Contact Fax Number**

Invoice Contact Fax Number (xxx-xxx-xxxx)

No response

65 **Invoice Contact E-mail Address**

Invoice Contact E-mail

carla@npetex.com

66 **Invoice Contact Alternate E-mail Address**

Invoice Contact Alternate E-mail Address

No response

67 **Billing Agent Company Name**

Billing Agent Company Name

No response

68 **Billing Agent Department Name**

Billing Agent Department Name

No response

69 **Billing Agent Contact - First Name**

Billing Agent Contact - First Name

No response

70 **Billing Agent Contact - Last Name**

Billing Agent Contact - Last Name

No response

71 **Billing Agent Mailing Address**

Billing Agent Mailing Address (P.O. Box or Street Address)

No response

72 **Billing Agent Mailing Address - City**

Billing Agent Mailing Address - City

No response

73 **Billing Agent Mailing Address - State**

Billing Agent Mailing Address - State (Abbreviate State Name)

No response

74 **Billing Agent Mailing Address - Zip Code**

Billing Agent Mailing Address - Zip Code

No response

75 **Billing Agent Contact Phone Number**

Billing Agent Contact Phone Number (xxx-xxx-xxxx)

No response

76 **Billing Agent Contact Extension Number**

Billing Agent Contact Extension Number

No response

77 **Billing Agent Fax Number**

Billing Agent Fax Number

No response

78 **Billing Agent Contact E-mail Address**

Billing Agent Contact E-mail Address

No response

79 **Billing Agent Alternative E-mail Address**

Billing Agent Alternative E-mail Address

No response

80 **Shipping Via**

Common Carrier, Company Truck, Prepaid and Add to Invoice, or Other

Company Truck

81 **Payment Terms**

Note: Vendor payment terms must comply with the BuyBoard General Terms and Conditions and the Texas Prompt Payment Act (Texas Government Code Ch. 2251).

Net 30 Days

82 **Vendor's Internal/Assigned Reference/Quote Number**

Vendor's Internal/Assigned Reference/Quote Number

No response

83 **State or Attach Return Policy**

Note: Only return requirements and processes will be deemed part of Vendor's return policy. Any unrelated contract terms, terms of sale, or other information not specifically related to return requirements and processes included in Vendor's return policy shall not apply to any awarded Contract unless specifically included as a deviation in the Deviation and Compliance Form and accepted by the Cooperative.

Must off rent via email to Stacy Terrell at stacy@npetex.com

84 **Electronic Payments**

Are electronic payments acceptable to your company?

Yes

85 **Credit Card Payments**

Are credit card payments acceptable to your company?

Yes

86 **Texas Regional Service Designation**

Texas Regional Service Designation - Refer to Form in Proposal Invitation

The Cooperative (referred to as "Texas Cooperative" in this form and in the State Service Designation form) offers vendors the opportunity to service its members throughout the entire State of Texas. If you do not plan to service all Texas Cooperative members statewide, you **must** indicate the specific regions you will service on this form. If you propose to serve different regions for different products or services included in your Proposal, you must complete and submit a separate Texas Regional Service Designation form for each group of products and clearly indicate the products or services to which the designation applies. ***By designating a region or regions, you are certifying that you are authorized and willing to provide the proposed products and services in those regions. Designating regions in which you are either unable or unwilling to provide the specified products and services shall be grounds for either rejection of your Proposal or, if awarded, termination of your Contract.*** Additionally, if you do not plan to service Texas Cooperative members (i.e., if you will service only states other than Texas), you must so indicate on this form.

87 **Company Name**

Company Name

Nueces Power Equipment

88 **Texas Regional Service Designation**

Select only one of the following options. If you select **"I will NOT serve all Regions of Texas",** you must then check the individual Regions you wish to serve.

I will not serve all Regions of Texas

89 **Region 1**

Region 1 - Edinburg

☑ Region 1

90 **Region 2**

Region 2 - Corpus Christi

☑ Region 2

91 **Region 3**

Region 3 - Victoria

☑ Region 3

92 **Region 4**

Region 4 - Houston

☑ Region 4

93 **Region 5**

Region 5 - Beaumont

☑ Region 5

94 **Region 6**

Region 6 - Huntsville

☑ Region 6

95	**Region 7** Region 7 - Kilgore ☐ *Region 7*
96	**Region 8** Region 8 - Mount Pleasant ☐ *Region 8*
97	**Region 9** Region 9 - Wichita Falls ☐ *Region 9*
98	**Region 10** Region 10 - Richardson ☐ *Region 10*
99	**Region 11** Region 11 - Fort Worth ☐ *Region 11*
100	**Region 12** Region 12 - Waco ☑ Region 12
101	**Region 13** Region 13 - Austin ☑ Region 13
102	**Region 14** Region 14 - Abilene ☑ Region 14
103	**Region 15** Region 15 - San Angelo ☑ Region 15
104	**Region 16** Region 16 - Amarillo ☐ *Region 16*
105	**Region 17** Region 17 - Lubbock ☑ Region 17
106	**Region 18** Region 18 - Midland ☑ Region 18

107 **Region 19**

Region 19 - El Paso

☑ Region 19

108 **Region 20**

Region 20 - San Antonio

☑ Region 20

109 **State Service Designation**

State Service Designation - Refer to Form in Proposal Invitation.

As set forth in the Proposal Invitation, it is the Cooperative's intent that other governmental entities in the United States have the opportunity to purchase goods or services awarded under the Contract, subject to applicable state law, through a piggy-back award or similar agreement through the National Purchasing Cooperative BuyBoard. If you plan to service the entire United States or only specific states, you must complete this form accordingly. *(Note: If you plan to service Texas Cooperative members, be sure that you complete the Texas Regional Service Designation form.)* ***In addition to this form, to be considered for a piggy-back award by the National Purchasing Cooperative, you must have an authorized representative sign the National Purchasing Cooperative Vendor Award Agreement that follows this form.***

If you serve different states for different products or services included in your Proposal, you must complete and submit a separate State Service Designation form for each group of products and clearly indicate the products or services to which the designation applies. *By designating a state or states, you are certifying that you are authorized and willing to provide the proposed products and services in those states. Designating states in which you are either unable or unwilling to provide the specified products and services shall be grounds for either rejection of your Proposal or, if awarded, termination of your Contract.*

110 **Company Name**

Company Name

Nueces Power Equipment

111 **State Service Designation**

Select only one of the following options. If you select "I will NOT serve all States", you must then check the individual States you wish to serve.

I will not serve all states in the United States

112 **Alabama**

Alabama

☐ *Alabama*

113 **Alaska**

Alaska

☐ *Alaska*

114 **Arizona**

Arizona

☐ *Arizona*

115 **Arkansas**

Arkansas

☐ *Arkansas*

116	**California** California (Public Contract Code 20118 & 20652) ☐ *California*
117	**Colorado** Colorado ☐ *Colorado*
118	**Connecticut** Connecticut ☐ *Connecticut*
119	**Delaware** Delaware ☐ *Delaware*
120	**District of Columbia** District of Columbia ☐ *District of Columbia*
121	**Florida** Florida ☐ *Florida*
122	**Georgia** Georgia ☐ *Georgia*
123	**Hawaii** Hawaii ☐ *Hawaii*
124	**Idaho** Idaho ☐ *Idaho*
125	**Illinois** Illinois ☐ *Illinois*
126	**Indiana** Indiana ☐ *Indiana*
127	**Iowa** Iowa ☐ *Iowa*

128	**Kansas** Kansas ☐ *Kansas*
129	**Kentucky** Kentucky ☐ *Kentucky*
130	**Louisiana** Louisiana ☐ *Louisiana*
131	**Maine** Maine ☐ *Maine*
132	**Maryland** Maryland ☐ *Maryland*
133	**Massachusetts** Massachusetts ☐ *Massachusetts*
134	**Michigan** Michigan ☐ *Michigan*
135	**Minnesota** Minnesota ☐ *Minnesota*
136	**Mississippi** Mississippi ☐ *Mississippi*
137	**Missouri** Missouri ☐ *Missouri*
138	**Montana** Montana ☐ *Montana*
139	**Nebraska** Nebraska ☐ *Nebraska*

140	**Nevada** Nevada ☐ *Nevada*
141	**New Hampshire** New Hampshire ☐ *New Hampshire*
142	**New Jersey** New Jersey ☐ *New Jersey*
143	**New Mexico** New Mexico ☑ New Mexico
144	**New York** New York ☐ *New York*
145	**North Carolina** North Carolina ☐ *North Carolina*
146	**North Dakota** North Dakota ☐ *North Dakota*
147	**Ohio** Ohio ☐ *Ohio*
148	**Oklahoma** Oklahoma ☐ *Oklahoma*
149	**Oregon** Oregon ☐ *Oregon*
150	**Pennsylvania** Pennsylvania ☐ *Pennsylvania*
151	**Rhode Island** Rhode Island ☐ *Rhode Island*

152	**South Carolina** South Carolina ☐ *South Carolina*
153	**South Dakota** South Dakota ☐ *South Dakota*
154	**Tennessee** Tennessee ☐ *Tennessee*
155	**Texas** Texas ☑ Texas
156	**Utah** Utah ☐ *Utah*
157	**Vermont** Vermont ☐ *Vermont*
158	**Virginia** Virginia ☐ *Virginia*
159	**Washington** Washington ☐ *Washington*
160	**West Virginia** West Virginia ☐ *West Virginia*
161	**Wisconsin** Wisconsin ☐ *Wisconsin*
162	**Wyoming** Wyoming ☐ *Wyoming*

Bid Lines

1 **Section I: New Construction, Road, Bridge and Repair Equipment-PURCHASE ONLY**

Discount (%) off catalog/price list for **Air Compressors (Truck or Trailer Mounted), Accessories and Attachments.** Catalog/Price list MUST be included or proposal will not be considered.

No Bid

Item Notes: **PROPOSAL NOTE 1:** Vendors shall submit catalog(s)/price list(s) with their Proposal response or the Proposal will not be considered. Vendors shall submit catalog(s)/price list(s) with the Proposal in a readily available and readable electronic format, with Excel or searchable PDF preferred. **No paper catalogs or manufacturer/vendor websites will be accepted.**

PROPOSAL NOTE 2: A Vendor proposing shall be approved and authorized by the manufacturer to sell, install, and service the brand(s) of product(s) proposed. Proposers responding to this Proposal Invitation shall submit an approval letter from each manufacturer for each product line proposed. The requirement to provide an approval letter from the manufacturer applies to both seller and installers. Manufacturers responding directly to this Proposal Invitation, in lieu of an authorization letter, shall submit a written explanation that the company is the manufacturer of the product line(s) proposed. Dealer authorization agreements will not be accepted as a substitute for the manufacturer authorization letter.

The manufacturer authorization letters must include the following:
1. Composed on manufacturer letterhead (an email message is not a substitute for the letter),
2. Addressed to "The Local Government Purchasing Cooperative",
3. Dated within the current calendar year,
4. List the regions in Texas and states that Vendor is authorized to sell, install, and service product(s) proposed, and
5. Name, Title, and Signature of Authorized Official from Manufacturer.

PROPOSAL NOTE 3: **"Pre-Owned/Reconditioned/Retired Rental"** shall be defined as equipment having been checked and inspected by a manufacturer-authorized dealer prior to sale and shall be no older than sixty (60) months as of the date of delivery. Proposers responding to this Proposal Invitation for **"Pre-Owned/Reconditioned/Retired Rental"** equipment must also be approved by the manufacturer to sell pre-owned/reconditioned/retired rental equipment for the brand submitted and must submit an approval letter from each manufacturer with the Proposal. Manufacturer authorization letters must include the regions in which equipment can be sold. Equipment listed as **"Pre-Owned/Reconditioned/Retired Rental"** shall be in good and working condition and shall include a minimum warranty of one-hundred eighty (180) days against any defect from workmanship and parts and shall cover equipment repairs and/or component replacement. Total equipment usage hours as displayed on the service meter will have a maximum of one thousand (1,000) hours per year of age and a minimum of seventy-five percent (75%) of wear remaining for tires, track, and/or ground engagement tools.

Vendors proposing multiple manufacturer product lines and/or catalog/price list per line item must submit the information as follows or proposal may not be considered:

- Select **"Add Alternate"** for each additional manufacturer product line and/or catalog/price list proposed
- Vendor's must list one specific percentage discount for each manufacturer and/or catalog/price list listed

Item Attributes

1. State Name of Manufacturer Catalog or Product Price list Proposed with Discount Percentage

NOTE: Do not reference SKU, Reference Numbers, Websites, and/or "See Attached/Enclosed".

No response

2 **Section I: New Construction, Road, Bridge and Repair Equipment-PURCHASE ONLY**

Discount (%) off catalog/price list for **Articulated Trucks, Accessories and Attachments.** Catalog/Price list MUST be included or proposal will not be considered.

Total: 35%

Item Notes: **PROPOSAL NOTE 1:** Vendors shall submit catalog(s)/price list(s) with their Proposal response or the Proposal will not be considered. Vendors shall submit catalog(s)/price list(s) with the Proposal in a readily available and readable electronic format, with Excel or searchable PDF preferred. **No paper catalogs or manufacturer/vendor websites will be accepted.**

PROPOSAL NOTE 2: A Vendor proposing shall be approved and authorized by the manufacturer to sell, install, and service the brand(s) of product(s) proposed. Proposers responding to this Proposal Invitation shall submit an approval letter from each manufacturer for each product line proposed. The requirement to provide an approval letter from the manufacturer applies to both seller and installers. Manufacturers responding directly to this Proposal Invitation, in lieu of an authorization letter, shall submit a written explanation that the company is the manufacturer of the product line(s) proposed. Dealer authorization agreements will not be accepted as a substitute for the manufacturer authorization letter.

The manufacturer authorization letters must include the following:
1. Composed on manufacturer letterhead (an email message is not a substitute for the letter),
2. Addressed to "The Local Government Purchasing Cooperative",
3. Dated within the current calendar year,
4. List the regions in Texas and states that Vendor is authorized to sell, install, and service product(s) proposed, and
5. Name, Title, and Signature of Authorized Official from Manufacturer.

PROPOSAL NOTE 3: **"Pre-Owned/Reconditioned/Retired Rental"** shall be defined as equipment having been checked and inspected by a manufacturer-authorized dealer prior to sale and shall be no older than sixty (60) months as of the date of delivery. Proposers responding to this Proposal Invitation for **"Pre-Owned/Reconditioned/Retired Rental"** equipment must also be approved by the manufacturer to sell pre-owned/reconditioned/retired rental equipment for the brand submitted and must submit an approval letter from each manufacturer with the Proposal. Manufacturer authorization letters must include the regions in which equipment can be sold. Equipment listed as **"Pre-Owned/Reconditioned/Retired Rental"** shall be in good and working condition and shall include a minimum warranty of one-hundred eighty (180) days against any defect from workmanship and parts and shall cover equipment repairs and/or component replacement. Total equipment usage hours as displayed on the service meter will have a maximum of one thousand (1,000) hours per year of age and a minimum of seventy-five percent (75%) of wear remaining for tires, track, and/or ground engagement tools.

Vendors proposing multiple manufacturer product lines and/or catalog/price list per line item must submit the information as follows or proposal may not be considered:

- Select **"Add Alternate"** for each additional manufacturer product line and/or catalog/price list proposed
- Vendor's must list one specific percentage discount for each manufacturer and/or catalog/price list listed

Item Attributes

1. State Name of Manufacturer Catalog or Product Price list Proposed with Discount Percentage

NOTE: Do not reference SKU, Reference Numbers, Websites, and/or "See Attached/Enclosed".

Hyundai Pricelist

3 **Section I: New Construction, Road, Bridge and Repair Equipment-PURCHASE ONLY**

Discount (%) off catalog/price list for **Asphalt Compactors, Accessories and Attachments.** Catalog/Price list MUST be included or proposal will not be considered.

Total: 25%

Item Notes: **PROPOSAL NOTE 1:** Vendors shall submit catalog(s)/price list(s) with their Proposal response or the Proposal will not be considered. Vendors shall submit catalog(s)/price list(s) with the Proposal in a readily available and readable electronic format, with Excel or searchable PDF preferred. **No paper catalogs or manufacturer/vendor websites will be accepted.**

PROPOSAL NOTE 2: A Vendor proposing shall be approved and authorized by the manufacturer to sell, install, and service the brand(s) of product(s) proposed. Proposers responding to this Proposal Invitation shall submit an approval letter from each manufacturer for each product line proposed. The requirement to provide an approval letter from the manufacturer applies to both seller and installers. Manufacturers responding directly to this Proposal Invitation, in lieu of an authorization letter, shall submit a written explanation that the company is the manufacturer of the product line(s) proposed. Dealer authorization agreements will not be accepted as a substitute for the manufacturer authorization letter.

The manufacturer authorization letters must include the following:
1. Composed on manufacturer letterhead (an email message is not a substitute for the letter),
2. Addressed to "The Local Government Purchasing Cooperative",
3. Dated within the current calendar year,
4. List the regions in Texas and states that Vendor is authorized to sell, install, and service product(s) proposed, and
5. Name, Title, and Signature of Authorized Official from Manufacturer.

PROPOSAL NOTE 3: **"Pre-Owned/Reconditioned/Retired Rental"** shall be defined as equipment having been checked and inspected by a manufacturer-authorized dealer prior to sale and shall be no older than sixty (60) months as of the date of delivery. Proposers responding to this Proposal Invitation for **"Pre-Owned/Reconditioned/Retired Rental"** equipment must also be approved by the manufacturer to sell pre-owned/reconditioned/retired rental equipment for the brand submitted and must submit an approval letter from each manufacturer with the Proposal. Manufacturer authorization letters must include the regions in which equipment can be sold. Equipment listed as **"Pre-Owned/Reconditioned/Retired Rental"** shall be in good and working condition and shall include a minimum warranty of one-hundred eighty (180) days against any defect from workmanship and parts and shall cover equipment repairs and/or component replacement. Total equipment usage hours as displayed on the service meter will have a maximum of one thousand (1,000) hours per year of age and a minimum of seventy-five percent (75%) of wear remaining for tires, track, and/or ground engagement tools.

Vendors proposing multiple manufacturer product lines and/or catalog/price list per line item must submit the information as follows or proposal may not be considered:

- Select **"Add Alternate"** for each additional manufacturer product line and/or catalog/price list proposed
- Vendor's must list one specific percentage discount for each manufacturer and/or catalog/price list listed

Item Attributes

1. State Name of Manufacturer Catalog or Product Price list Proposed with Discount Percentage

NOTE: Do not reference SKU, Reference Numbers, Websites, and/or "See Attached/Enclosed".

Case Compaction Price Book

4 **Section I: New Construction, Road, Bridge and Repair Equipment-PURCHASE ONLY**

Discount (%) off catalog/price list for **Asphalt Cutters, Accessories and Attachments.** Catalog/Price list MUST be included or proposal will not be considered.

No Bid

Item Notes: **PROPOSAL NOTE 1:** Vendors shall submit catalog(s)/price list(s) with their Proposal response or the Proposal will not be considered. Vendors shall submit catalog(s)/price list(s) with the Proposal in a readily available and readable electronic format, with Excel or searchable PDF preferred. **No paper catalogs or manufacturer/vendor websites will be accepted.**

PROPOSAL NOTE 2: A Vendor proposing shall be approved and authorized by the manufacturer to sell, install, and service the brand(s) of product(s) proposed. Proposers responding to this Proposal Invitation shall submit an approval letter from each manufacturer for each product line proposed. The requirement to provide an approval letter from the manufacturer applies to both seller and installers. Manufacturers responding directly to this Proposal Invitation, in lieu of an authorization letter, shall submit a written explanation that the company is the manufacturer of the product line(s) proposed. Dealer authorization agreements will not be accepted as a substitute for the manufacturer authorization letter.

The manufacturer authorization letters must include the following:
1. Composed on manufacturer letterhead (an email message is not a substitute for the letter),
2. Addressed to "The Local Government Purchasing Cooperative",
3. Dated within the current calendar year,
4. List the regions in Texas and states that Vendor is authorized to sell, install, and service product(s) proposed, and
5. Name, Title, and Signature of Authorized Official from Manufacturer.

PROPOSAL NOTE 3: **"Pre-Owned/Reconditioned/Retired Rental"** shall be defined as equipment having been checked and inspected by a manufacturer-authorized dealer prior to sale and shall be no older than sixty (60) months as of the date of delivery. Proposers responding to this Proposal Invitation for **"Pre-Owned/Reconditioned/Retired Rental"** equipment must also be approved by the manufacturer to sell pre-owned/reconditioned/retired rental equipment for the brand submitted and must submit an approval letter from each manufacturer with the Proposal. Manufacturer authorization letters must include the regions in which equipment can be sold. Equipment listed as **"Pre-Owned/Reconditioned/Retired Rental"** shall be in good and working condition and shall include a minimum warranty of one-hundred eighty (180) days against any defect from workmanship and parts and shall cover equipment repairs and/or component replacement. Total equipment usage hours as displayed on the service meter will have a maximum of one thousand (1,000) hours per year of age and a minimum of seventy-five percent (75%) of wear remaining for tires, track, and/or ground engagement tools.

Vendors proposing multiple manufacturer product lines and/or catalog/price list per line item must submit the information as follows or proposal may not be considered:

- Select **"Add Alternate"** for each additional manufacturer product line and/or catalog/price list proposed
- Vendor's must list one specific percentage discount for each manufacturer and/or catalog/price list listed

Item Attributes

1. State Name of Manufacturer Catalog or Product Price list Proposed with Discount Percentage

NOTE: Do not reference SKU, Reference Numbers, Websites, and/or "See Attached/Enclosed".

No response

5 **Section I: New Construction, Road, Bridge and Repair Equipment-PURCHASE ONLY**

Discount (%) off catalog/price list for **Asphalt Distributors, Accessories and Attachments.** Catalog/Price list MUST be included or proposal will not be considered. Asphalt Distributors, Accessories and Attachments.

No Bid

Item Notes: **PROPOSAL NOTE 1:** Vendors shall submit catalog(s)/price list(s) with their Proposal response or the Proposal will not be considered. Vendors shall submit catalog(s)/price list(s) with the Proposal in a readily available and readable electronic format, with Excel or searchable PDF preferred. **No paper catalogs or manufacturer/vendor websites will be accepted.**

PROPOSAL NOTE 2: A Vendor proposing shall be approved and authorized by the manufacturer to sell, install, and service the brand(s) of product(s) proposed. Proposers responding to this Proposal Invitation shall submit an approval letter from each manufacturer for each product line proposed. The requirement to provide an approval letter from the manufacturer applies to both seller and installers. Manufacturers responding directly to this Proposal Invitation, in lieu of an authorization letter, shall submit a written explanation that the company is the manufacturer of the product line(s) proposed. Dealer authorization agreements will not be accepted as a substitute for the manufacturer authorization letter.

The manufacturer authorization letters must include the following:
1. Composed on manufacturer letterhead (an email message is not a substitute for the letter),
2. Addressed to "The Local Government Purchasing Cooperative",
3. Dated within the current calendar year,
4. List the regions in Texas and states that Vendor is authorized to sell, install, and service product(s) proposed, and
5. Name, Title, and Signature of Authorized Official from Manufacturer.

PROPOSAL NOTE 3: **"Pre-Owned/Reconditioned/Retired Rental"** shall be defined as equipment having been checked and inspected by a manufacturer-authorized dealer prior to sale and shall be no older than sixty (60) months as of the date of delivery. Proposers responding to this Proposal Invitation for **"Pre-Owned/Reconditioned/Retired Rental"** equipment must also be approved by the manufacturer to sell pre-owned/reconditioned/retired rental equipment for the brand submitted and must submit an approval letter from each manufacturer with the Proposal. Manufacturer authorization letters must include the regions in which equipment can be sold. Equipment listed as **"Pre-Owned/Reconditioned/Retired Rental"** shall be in good and working condition and shall include a minimum warranty of one-hundred eighty (180) days against any defect from workmanship and parts and shall cover equipment repairs and/or component replacement. Total equipment usage hours as displayed on the service meter will have a maximum of one thousand (1,000) hours per year of age and a minimum of seventy-five percent (75%) of wear remaining for tires, track, and/or ground engagement tools.

Vendors proposing multiple manufacturer product lines and/or catalog/price list per line item must submit the information as follows or proposal may not be considered:

- Select **"Add Alternate"** for each additional manufacturer product line and/or catalog/price list proposed
- Vendor's must list one specific percentage discount for each manufacturer and/or catalog/price list listed

Item Attributes

1. State Name of Manufacturer Catalog or Product Price list Proposed with Discount Percentage

NOTE: Do not reference SKU, Reference Numbers, Websites, and/or "See Attached/Enclosed".

No response

6 **Section I: New Construction, Road, Bridge and Repair Equipment-PURCHASE ONLY**

Discount (%) off catalog/price list for **Asphalt Emulsion Tanks, Accessories and Attachments.** Catalog/Price list MUST be included or proposal will not be considered. Asphalt Distributors, Accessories and Attachments.

No Bid

Item Notes: **PROPOSAL NOTE 1:** Vendors shall submit catalog(s)/price list(s) with their Proposal response or the Proposal will not be considered. Vendors shall submit catalog(s)/price list(s) with the Proposal in a readily available and readable electronic format, with Excel or searchable PDF preferred. **No paper catalogs or manufacturer/vendor websites will be accepted.**

PROPOSAL NOTE 2: A Vendor proposing shall be approved and authorized by the manufacturer to sell, install, and service the brand(s) of product(s) proposed. Proposers responding to this Proposal Invitation shall submit an approval letter from each manufacturer for each product line proposed. The requirement to provide an approval letter from the manufacturer applies to both seller and installers. Manufacturers responding directly to this Proposal Invitation, in lieu of an authorization letter, shall submit a written explanation that the company is the manufacturer of the product line(s) proposed. Dealer authorization agreements will not be accepted as a substitute for the manufacturer authorization letter.

The manufacturer authorization letters must include the following:
1. Composed on manufacturer letterhead (an email message is not a substitute for the letter),
2. Addressed to "The Local Government Purchasing Cooperative",
3. Dated within the current calendar year,
4. List the regions in Texas and states that Vendor is authorized to sell, install, and service product(s) proposed, and
5. Name, Title, and Signature of Authorized Official from Manufacturer.

PROPOSAL NOTE 3: **"Pre-Owned/Reconditioned/Retired Rental"** shall be defined as equipment having been checked and inspected by a manufacturer-authorized dealer prior to sale and shall be no older than sixty (60) months as of the date of delivery. Proposers responding to this Proposal Invitation for **"Pre-Owned/Reconditioned/Retired Rental"** equipment must also be approved by the manufacturer to sell pre-owned/reconditioned/retired rental equipment for the brand submitted and must submit an approval letter from each manufacturer with the Proposal. Manufacturer authorization letters must include the regions in which equipment can be sold. Equipment listed as **"Pre-Owned/Reconditioned/Retired Rental"** shall be in good and working condition and shall include a minimum warranty of one-hundred eighty (180) days against any defect from workmanship and parts and shall cover equipment repairs and/or component replacement. Total equipment usage hours as displayed on the service meter will have a maximum of one thousand (1,000) hours per year of age and a minimum of seventy-five percent (75%) of wear remaining for tires, track, and/or ground engagement tools.

Vendors proposing multiple manufacturer product lines and/or catalog/price list per line item must submit the information as follows or proposal may not be considered:

- Select **"Add Alternate"** for each additional manufacturer product line and/or catalog/price list proposed
- Vendor's must list one specific percentage discount for each manufacturer and/or catalog/price list listed

Item Attributes

1. State Name of Manufacturer Catalog or Product Price list Proposed with Discount Percentage

NOTE: Do not reference SKU, Reference Numbers, Websites, and/or "See Attached/Enclosed".

No response

7 **Section I: New Construction, Road, Bridge and Repair Equipment-PURCHASE ONLY**

Discount (%) off catalog/price list for **Asphalt Pavers, Accessories and Attachments.** Catalog/Price list MUST be included or proposal will not be considered. Asphalt Distributors, Accessories and Attachments.

No Bid

Item Notes: **PROPOSAL NOTE 1:** Vendors shall submit catalog(s)/price list(s) with their Proposal response or the Proposal will not be considered. Vendors shall submit catalog(s)/price list(s) with the Proposal in a readily available and readable electronic format, with Excel or searchable PDF preferred. **No paper catalogs or manufacturer/vendor websites will be accepted.**

PROPOSAL NOTE 2: A Vendor proposing shall be approved and authorized by the manufacturer to sell, install, and service the brand(s) of product(s) proposed. Proposers responding to this Proposal Invitation shall submit an approval letter from each manufacturer for each product line proposed. The requirement to provide an approval letter from the manufacturer applies to both seller and installers. Manufacturers responding directly to this Proposal Invitation, in lieu of an authorization letter, shall submit a written explanation that the company is the manufacturer of the product line(s) proposed. Dealer authorization agreements will not be accepted as a substitute for the manufacturer authorization letter.

The manufacturer authorization letters must include the following:
1. Composed on manufacturer letterhead (an email message is not a substitute for the letter),
2. Addressed to "The Local Government Purchasing Cooperative",
3. Dated within the current calendar year,
4. List the regions in Texas and states that Vendor is authorized to sell, install, and service product(s) proposed, and
5. Name, Title, and Signature of Authorized Official from Manufacturer.

PROPOSAL NOTE 3: **"Pre-Owned/Reconditioned/Retired Rental"** shall be defined as equipment having been checked and inspected by a manufacturer-authorized dealer prior to sale and shall be no older than sixty (60) months as of the date of delivery. Proposers responding to this Proposal Invitation for **"Pre-Owned/Reconditioned/Retired Rental"** equipment must also be approved by the manufacturer to sell pre-owned/reconditioned/retired rental equipment for the brand submitted and must submit an approval letter from each manufacturer with the Proposal. Manufacturer authorization letters must include the regions in which equipment can be sold. Equipment listed as **"Pre-Owned/Reconditioned/Retired Rental"** shall be in good and working condition and shall include a minimum warranty of one-hundred eighty (180) days against any defect from workmanship and parts and shall cover equipment repairs and/or component replacement. Total equipment usage hours as displayed on the service meter will have a maximum of one thousand (1,000) hours per year of age and a minimum of seventy-five percent (75%) of wear remaining for tires, track, and/or ground engagement tools.

Vendors proposing multiple manufacturer product lines and/or catalog/price list per line item must submit the information as follows or proposal may not be considered:

- Select **"Add Alternate"** for each additional manufacturer product line and/or catalog/price list proposed
- Vendor's must list one specific percentage discount for each manufacturer and/or catalog/price list listed

Item Attributes

1. State Name of Manufacturer Catalog or Product Price list Proposed with Discount Percentage

NOTE: Do not reference SKU, Reference Numbers, Websites, and/or "See Attached/Enclosed".

No response

8 **Section I: New Construction, Road, Bridge and Repair Equipment-PURCHASE ONLY**

Discount (%) off catalog/price list for **Backhoe/Loaders, Accessories and Attachments.** Catalog/Price list MUST be included or proposal will not be considered. Asphalt Distributors, Accessories and Attachments.

Total: 25%

Item Notes: **PROPOSAL NOTE 1:** Vendors shall submit catalog(s)/price list(s) with their Proposal response or the Proposal will not be considered. Vendors shall submit catalog(s)/price list(s) with the Proposal in a readily available and readable electronic format, with Excel or searchable PDF preferred. **No paper catalogs or manufacturer/vendor websites will be accepted.**

PROPOSAL NOTE 2: A Vendor proposing shall be approved and authorized by the manufacturer to sell, install, and service the brand(s) of product(s) proposed. Proposers responding to this Proposal Invitation shall submit an approval letter from each manufacturer for each product line proposed. The requirement to provide an approval letter from the manufacturer applies to both seller and installers. Manufacturers responding directly to this Proposal Invitation, in lieu of an authorization letter, shall submit a written explanation that the company is the manufacturer of the product line(s) proposed. Dealer authorization agreements will not be accepted as a substitute for the manufacturer authorization letter.

The manufacturer authorization letters must include the following:
1. Composed on manufacturer letterhead (an email message is not a substitute for the letter),
2. Addressed to "The Local Government Purchasing Cooperative",
3. Dated within the current calendar year,
4. List the regions in Texas and states that Vendor is authorized to sell, install, and service product(s) proposed, and
5. Name, Title, and Signature of Authorized Official from Manufacturer.

PROPOSAL NOTE 3: **"Pre-Owned/Reconditioned/Retired Rental"** shall be defined as equipment having been checked and inspected by a manufacturer-authorized dealer prior to sale and shall be no older than sixty (60) months as of the date of delivery. Proposers responding to this Proposal Invitation for **"Pre-Owned/Reconditioned/Retired Rental"** equipment must also be approved by the manufacturer to sell pre-owned/reconditioned/retired rental equipment for the brand submitted and must submit an approval letter from each manufacturer with the Proposal. Manufacturer authorization letters must include the regions in which equipment can be sold. Equipment listed as **"Pre-Owned/Reconditioned/Retired Rental"** shall be in good and working condition and shall include a minimum warranty of one-hundred eighty (180) days against any defect from workmanship and parts and shall cover equipment repairs and/or component replacement. Total equipment usage hours as displayed on the service meter will have a maximum of one thousand (1,000) hours per year of age and a minimum of seventy-five percent (75%) of wear remaining for tires, track, and/or ground engagement tools.

Vendors proposing multiple manufacturer product lines and/or catalog/price list per line item must submit the information as follows or proposal may not be considered:

- Select **"Add Alternate"** for each additional manufacturer product line and/or catalog/price list proposed
- Vendor's must list one specific percentage discount for each manufacturer and/or catalog/price list listed

Item Attributes

1. State Name of Manufacturer Catalog or Product Price list Proposed with Discount Percentage

NOTE: Do not reference SKU, Reference Numbers, Websites, and/or "See Attached/Enclosed".

Case Backhoe Price Book

9 **Section I: New Construction, Road, Bridge and Repair Equipment-PURCHASE ONLY**

Discount (%) off catalog/price list for **Chip Spreaders, Accessories and Attachments.** Catalog/Price list MUST be included or proposal will not be considered. Asphalt Distributors, Accessories and Attachments.

No Bid

Item Notes: **PROPOSAL NOTE 1:** Vendors shall submit catalog(s)/price list(s) with their Proposal response or the Proposal will not be considered. Vendors shall submit catalog(s)/price list(s) with the Proposal in a readily available and readable electronic format, with Excel or searchable PDF preferred. **No paper catalogs or manufacturer/vendor websites will be accepted.**

PROPOSAL NOTE 2: A Vendor proposing shall be approved and authorized by the manufacturer to sell, install, and service the brand(s) of product(s) proposed. Proposers responding to this Proposal Invitation shall submit an approval letter from each manufacturer for each product line proposed. The requirement to provide an approval letter from the manufacturer applies to both seller and installers. Manufacturers responding directly to this Proposal Invitation, in lieu of an authorization letter, shall submit a written explanation that the company is the manufacturer of the product line(s) proposed. Dealer authorization agreements will not be accepted as a substitute for the manufacturer authorization letter.

The manufacturer authorization letters must include the following:
1. Composed on manufacturer letterhead (an email message is not a substitute for the letter),
2. Addressed to "The Local Government Purchasing Cooperative",
3. Dated within the current calendar year,
4. List the regions in Texas and states that Vendor is authorized to sell, install, and service product(s) proposed, and
5. Name, Title, and Signature of Authorized Official from Manufacturer.

PROPOSAL NOTE 3: **"Pre-Owned/Reconditioned/Retired Rental"** shall be defined as equipment having been checked and inspected by a manufacturer-authorized dealer prior to sale and shall be no older than sixty (60) months as of the date of delivery. Proposers responding to this Proposal Invitation for **"Pre-Owned/Reconditioned/Retired Rental"** equipment must also be approved by the manufacturer to sell pre-owned/reconditioned/retired rental equipment for the brand submitted and must submit an approval letter from each manufacturer with the Proposal. Manufacturer authorization letters must include the regions in which equipment can be sold. Equipment listed as **"Pre-Owned/Reconditioned/Retired Rental"** shall be in good and working condition and shall include a minimum warranty of one-hundred eighty (180) days against any defect from workmanship and parts and shall cover equipment repairs and/or component replacement. Total equipment usage hours as displayed on the service meter will have a maximum of one thousand (1,000) hours per year of age and a minimum of seventy-five percent (75%) of wear remaining for tires, track, and/or ground engagement tools.

Vendors proposing multiple manufacturer product lines and/or catalog/price list per line item must submit the information as follows or proposal may not be considered:

- Select **"Add Alternate"** for each additional manufacturer product line and/or catalog/price list proposed
- Vendor's must list one specific percentage discount for each manufacturer and/or catalog/price list listed

Item Attributes

1. State Name of Manufacturer Catalog or Product Price list Proposed with Discount Percentage

NOTE: Do not reference SKU, Reference Numbers, Websites, and/or "See Attached/Enclosed".

No response

10 **Section I: New Construction, Road, Bridge and Repair Equipment-PURCHASE ONLY**

Discount (%) off catalog/price list for **Cold Planers, Accessories and Attachments.** Catalog/Price list MUST be included or proposal will not be considered. Asphalt Distributors, Accessories and Attachments.

No Bid

Item Notes: **PROPOSAL NOTE 1:** Vendors shall submit catalog(s)/price list(s) with their Proposal response or the Proposal will not be considered. Vendors shall submit catalog(s)/price list(s) with the Proposal in a readily available and readable electronic format, with Excel or searchable PDF preferred. **No paper catalogs or manufacturer/vendor websites will be accepted.**

PROPOSAL NOTE 2: A Vendor proposing shall be approved and authorized by the manufacturer to sell, install, and service the brand(s) of product(s) proposed. Proposers responding to this Proposal Invitation shall submit an approval letter from each manufacturer for each product line proposed. The requirement to provide an approval letter from the manufacturer applies to both seller and installers. Manufacturers responding directly to this Proposal Invitation, in lieu of an authorization letter, shall submit a written explanation that the company is the manufacturer of the product line(s) proposed. Dealer authorization agreements will not be accepted as a substitute for the manufacturer authorization letter.

The manufacturer authorization letters must include the following:
1. Composed on manufacturer letterhead (an email message is not a substitute for the letter),
2. Addressed to "The Local Government Purchasing Cooperative",
3. Dated within the current calendar year,
4. List the regions in Texas and states that Vendor is authorized to sell, install, and service product(s) proposed, and
5. Name, Title, and Signature of Authorized Official from Manufacturer.

PROPOSAL NOTE 3: **"Pre-Owned/Reconditioned/Retired Rental"** shall be defined as equipment having been checked and inspected by a manufacturer-authorized dealer prior to sale and shall be no older than sixty (60) months as of the date of delivery. Proposers responding to this Proposal Invitation for **"Pre-Owned/Reconditioned/Retired Rental"** equipment must also be approved by the manufacturer to sell pre-owned/reconditioned/retired rental equipment for the brand submitted and must submit an approval letter from each manufacturer with the Proposal. Manufacturer authorization letters must include the regions in which equipment can be sold. Equipment listed as **"Pre-Owned/Reconditioned/Retired Rental"** shall be in good and working condition and shall include a minimum warranty of one-hundred eighty (180) days against any defect from workmanship and parts and shall cover equipment repairs and/or component replacement. Total equipment usage hours as displayed on the service meter will have a maximum of one thousand (1,000) hours per year of age and a minimum of seventy-five percent (75%) of wear remaining for tires, track, and/or ground engagement tools.

Vendors proposing multiple manufacturer product lines and/or catalog/price list per line item must submit the information as follows or proposal may not be considered:

- Select **"Add Alternate"** for each additional manufacturer product line and/or catalog/price list proposed
- Vendor's must list one specific percentage discount for each manufacturer and/or catalog/price list listed

Item Attributes

1. State Name of Manufacturer Catalog or Product Price list Proposed with Discount Percentage

NOTE: Do not reference SKU, Reference Numbers, Websites, and/or "See Attached/Enclosed".

No response

1
1

Section I: New Construction, Road, Bridge and Repair Equipment-PURCHASE ONLY

Discount (%) off catalog/price list for **Conveyors, Accessories and Attachments.** Catalog/Price list MUST be included or proposal will not be considered. Asphalt Distributors, Accessories and Attachments.

No Bid

Item Notes: **PROPOSAL NOTE 1:** Vendors shall submit catalog(s)/price list(s) with their Proposal response or the Proposal will not be considered. Vendors shall submit catalog(s)/price list(s) with the Proposal in a readily available and readable electronic format, with Excel or searchable PDF preferred. **No paper catalogs or manufacturer/vendor websites will be accepted.**

PROPOSAL NOTE 2: A Vendor proposing shall be approved and authorized by the manufacturer to sell, install, and service the brand(s) of product(s) proposed. Proposers responding to this Proposal Invitation shall submit an approval letter from each manufacturer for each product line proposed. The requirement to provide an approval letter from the manufacturer applies to both seller and installers. Manufacturers responding directly to this Proposal Invitation, in lieu of an authorization letter, shall submit a written explanation that the company is the manufacturer of the product line(s) proposed. Dealer authorization agreements will not be accepted as a substitute for the manufacturer authorization letter.

The manufacturer authorization letters must include the following:
1. Composed on manufacturer letterhead (an email message is not a substitute for the letter),
2. Addressed to "The Local Government Purchasing Cooperative",
3. Dated within the current calendar year,
4. List the regions in Texas and states that Vendor is authorized to sell, install, and service product(s) proposed, and
5. Name, Title, and Signature of Authorized Official from Manufacturer.

PROPOSAL NOTE 3: **"Pre-Owned/Reconditioned/Retired Rental"** shall be defined as equipment having been checked and inspected by a manufacturer-authorized dealer prior to sale and shall be no older than sixty (60) months as of the date of delivery. Proposers responding to this Proposal Invitation for **"Pre-Owned/Reconditioned/Retired Rental"** equipment must also be approved by the manufacturer to sell pre-owned/reconditioned/retired rental equipment for the brand submitted and must submit an approval letter from each manufacturer with the Proposal. Manufacturer authorization letters must include the regions in which equipment can be sold. Equipment listed as **"Pre-Owned/Reconditioned/Retired Rental"** shall be in good and working condition and shall include a minimum warranty of one-hundred eighty (180) days against any defect from workmanship and parts and shall cover equipment repairs and/or component replacement. Total equipment usage hours as displayed on the service meter will have a maximum of one thousand (1,000) hours per year of age and a minimum of seventy-five percent (75%) of wear remaining for tires, track, and/or ground engagement tools.

Vendors proposing multiple manufacturer product lines and/or catalog/price list per line item must submit the information as follows or proposal may not be considered:

- Select **"Add Alternate"** for each additional manufacturer product line and/or catalog/price list proposed
- Vendor's must list one specific percentage discount for each manufacturer and/or catalog/price list listed

Item Attributes

1. State Name of Manufacturer Catalog or Product Price list Proposed with Discount Percentage

NOTE: Do not reference SKU, Reference Numbers, Websites, and/or "See Attached/Enclosed".

No response

1
2

Section I: New Construction, Road, Bridge and Repair Equipment-PURCHASE ONLY

Discount (%) off catalog/price list for **Curb and Gutter Machines, Accessories and Attachments.** Catalog/Price list MUST be included or proposal will not be considered. Asphalt Distributors, Accessories and Attachments.

No Bid

Item Notes: **PROPOSAL NOTE 1:** Vendors shall submit catalog(s)/price list(s) with their Proposal response or the Proposal will not be considered. Vendors shall submit catalog(s)/price list(s) with the Proposal in a readily available and readable electronic format, with Excel or searchable PDF preferred. **No paper catalogs or manufacturer/vendor websites will be accepted.**

PROPOSAL NOTE 2: A Vendor proposing shall be approved and authorized by the manufacturer to sell, install, and service the brand(s) of product(s) proposed. Proposers responding to this Proposal Invitation shall submit an approval letter from each manufacturer for each product line proposed. The requirement to provide an approval letter from the manufacturer applies to both seller and installers. Manufacturers responding directly to this Proposal Invitation, in lieu of an authorization letter, shall submit a written explanation that the company is the manufacturer of the product line(s) proposed. Dealer authorization agreements will not be accepted as a substitute for the manufacturer authorization letter.

The manufacturer authorization letters must include the following:
1. Composed on manufacturer letterhead (an email message is not a substitute for the letter),
2. Addressed to "The Local Government Purchasing Cooperative",
3. Dated within the current calendar year,
4. List the regions in Texas and states that Vendor is authorized to sell, install, and service product(s) proposed, and
5. Name, Title, and Signature of Authorized Official from Manufacturer.

PROPOSAL NOTE 3: **"Pre-Owned/Reconditioned/Retired Rental"** shall be defined as equipment having been checked and inspected by a manufacturer-authorized dealer prior to sale and shall be no older than sixty (60) months as of the date of delivery. Proposers responding to this Proposal Invitation for **"Pre-Owned/Reconditioned/Retired Rental"** equipment must also be approved by the manufacturer to sell pre-owned/reconditioned/retired rental equipment for the brand submitted and must submit an approval letter from each manufacturer with the Proposal. Manufacturer authorization letters must include the regions in which equipment can be sold. Equipment listed as **"Pre-Owned/Reconditioned/Retired Rental"** shall be in good and working condition and shall include a minimum warranty of one-hundred eighty (180) days against any defect from workmanship and parts and shall cover equipment repairs and/or component replacement. Total equipment usage hours as displayed on the service meter will have a maximum of one thousand (1,000) hours per year of age and a minimum of seventy-five percent (75%) of wear remaining for tires, track, and/or ground engagement tools.

Vendors proposing multiple manufacturer product lines and/or catalog/price list per line item must submit the information as follows or proposal may not be considered:

- Select **"Add Alternate"** for each additional manufacturer product line and/or catalog/price list proposed
- Vendor's must list one specific percentage discount for each manufacturer and/or catalog/price list listed

Item Attributes

1. State Name of Manufacturer Catalog or Product Price list Proposed with Discount Percentage

NOTE: Do not reference SKU, Reference Numbers, Websites, and/or "See Attached/Enclosed".

No response

13

Section I: New Construction, Road, Bridge and Repair Equipment-PURCHASE ONLY

Discount (%) off catalog/price list for **Forklifts, Accessories and Attachments.** Catalog/Price list MUST be included or proposal will not be considered. Asphalt Distributors, Accessories and Attachments.

Total: 25%

Item Notes: **PROPOSAL NOTE 1:** Vendors shall submit catalog(s)/price list(s) with their Proposal response or the Proposal will not be considered. Vendors shall submit catalog(s)/price list(s) with the Proposal in a readily available and readable electronic format, with Excel or searchable PDF preferred. **No paper catalogs or manufacturer/vendor websites will be accepted.**

PROPOSAL NOTE 2: A Vendor proposing shall be approved and authorized by the manufacturer to sell, install, and service the brand(s) of product(s) proposed. Proposers responding to this Proposal Invitation shall submit an approval letter from each manufacturer for each product line proposed. The requirement to provide an approval letter from the manufacturer applies to both seller and installers. Manufacturers responding directly to this Proposal Invitation, in lieu of an authorization letter, shall submit a written explanation that the company is the manufacturer of the product line(s) proposed. Dealer authorization agreements will not be accepted as a substitute for the manufacturer authorization letter.

The manufacturer authorization letters must include the following:
1. Composed on manufacturer letterhead (an email message is not a substitute for the letter),
2. Addressed to "The Local Government Purchasing Cooperative",
3. Dated within the current calendar year,
4. List the regions in Texas and states that Vendor is authorized to sell, install, and service product(s) proposed, and
5. Name, Title, and Signature of Authorized Official from Manufacturer.

PROPOSAL NOTE 3: **"Pre-Owned/Reconditioned/Retired Rental"** shall be defined as equipment having been checked and inspected by a manufacturer-authorized dealer prior to sale and shall be no older than sixty (60) months as of the date of delivery. Proposers responding to this Proposal Invitation for **"Pre-Owned/Reconditioned/Retired Rental"** equipment must also be approved by the manufacturer to sell pre-owned/reconditioned/retired rental equipment for the brand submitted and must submit an approval letter from each manufacturer with the Proposal. Manufacturer authorization letters must include the regions in which equipment can be sold. Equipment listed as **"Pre-Owned/Reconditioned/Retired Rental"** shall be in good and working condition and shall include a minimum warranty of one-hundred eighty (180) days against any defect from workmanship and parts and shall cover equipment repairs and/or component replacement. Total equipment usage hours as displayed on the service meter will have a maximum of one thousand (1,000) hours per year of age and a minimum of seventy-five percent (75%) of wear remaining for tires, track, and/or ground engagement tools.

Vendors proposing multiple manufacturer product lines and/or catalog/price list per line item must submit the information as follows or proposal may not be considered:

- Select **"Add Alternate"** for each additional manufacturer product line and/or catalog/price list proposed
- Vendor's must list one specific percentage discount for each manufacturer and/or catalog/price list listed

Item Attributes

1. State Name of Manufacturer Catalog or Product Price list Proposed with Discount Percentage

NOTE: Do not reference SKU, Reference Numbers, Websites, and/or "See Attached/Enclosed".

Case Forklift Price Book

Alternate 1

Section I: New Construction, Road, Bridge and Repair Equipment-PURCHASE ONLY

Discount (%) off catalog/price list for **Forklifts, Accessories and Attachments.** Catalog/Price list MUST be included or proposal will not be considered. Asphalt Distributors, Accessories and Attachments.

Total: 15%

Item Attributes

1. State Name of Manufacturer Catalog or Product Price list Proposed with Discount Percentage

NOTE: Do not reference SKU, Reference Numbers, Websites, and/or "See Attached/Enclosed".

Skyjack Price Book

14

Section I: New Construction, Road, Bridge and Repair Equipment-PURCHASE ONLY

Discount (%) off catalog/price list for **Generator Equipment and Electrical Systems, Accessories and Attachments.** Catalog/Price list MUST be included or proposal will not be considered. Asphalt Distributors, Accessories and Attachments.

No Bid

Item Notes: **PROPOSAL NOTE 1:** Vendors shall submit catalog(s)/price list(s) with their Proposal response or the Proposal will not be considered. Vendors shall submit catalog(s)/price list(s) with the Proposal in a readily available and readable electronic format, with Excel or searchable PDF preferred. **No paper catalogs or manufacturer/vendor websites will be accepted.**

PROPOSAL NOTE 2: A Vendor proposing shall be approved and authorized by the manufacturer to sell, install, and service the brand(s) of product(s) proposed. Proposers responding to this Proposal Invitation shall submit an approval letter from each manufacturer for each product line proposed. The requirement to provide an approval letter from the manufacturer applies to both seller and installers. Manufacturers responding directly to this Proposal Invitation, in lieu of an authorization letter, shall submit a written explanation that the company is the manufacturer of the product line(s) proposed. Dealer authorization agreements will not be accepted as a substitute for the manufacturer authorization letter.

The manufacturer authorization letters must include the following:
1. Composed on manufacturer letterhead (an email message is not a substitute for the letter),
2. Addressed to "The Local Government Purchasing Cooperative",
3. Dated within the current calendar year,
4. List the regions in Texas and states that Vendor is authorized to sell, install, and service product(s) proposed, and
5. Name, Title, and Signature of Authorized Official from Manufacturer.

PROPOSAL NOTE 3: **"Pre-Owned/Reconditioned/Retired Rental"** shall be defined as equipment having been checked and inspected by a manufacturer-authorized dealer prior to sale and shall be no older than sixty (60) months as of the date of delivery. Proposers responding to this Proposal Invitation for **"Pre-Owned/Reconditioned/Retired Rental"** equipment must also be approved by the manufacturer to sell pre-owned/reconditioned/retired rental equipment for the brand submitted and must submit an approval letter from each manufacturer with the Proposal. Manufacturer authorization letters must include the regions in which equipment can be sold. Equipment listed as **"Pre-Owned/Reconditioned/Retired Rental"** shall be in good and working condition and shall include a minimum warranty of one-hundred eighty (180) days against any defect from workmanship and parts and shall cover equipment repairs and/or component replacement. Total equipment usage hours as displayed on the service meter will have a maximum of one thousand (1,000) hours per year of age and a minimum of seventy-five percent (75%) of wear remaining for tires, track, and/or ground engagement tools.

Vendors proposing multiple manufacturer product lines and/or catalog/price list per line item must submit the information as follows or proposal may not be considered:

- Select **"Add Alternate"** for each additional manufacturer product line and/or catalog/price list proposed
- Vendor's must list one specific percentage discount for each manufacturer and/or catalog/price list listed

Item Attributes

1. State Name of Manufacturer Catalog or Product Price list Proposed with Discount Percentage

NOTE: Do not reference SKU, Reference Numbers, Websites, and/or "See Attached/Enclosed".

No response

15

Section I: New Construction, Road, Bridge and Repair Equipment-PURCHASE ONLY

Discount (%) off catalog/price list for **Hydraulic Hammers, Accessories and Attachments.** Catalog/Price list MUST be included or proposal will not be considered. Asphalt Distributors, Accessories and Attachments.

No Bid

Item Notes: **PROPOSAL NOTE 1:** Vendors shall submit catalog(s)/price list(s) with their Proposal response or the Proposal will not be considered. Vendors shall submit catalog(s)/price list(s) with the Proposal in a readily available and readable electronic format, with Excel or searchable PDF preferred. **No paper catalogs or manufacturer/vendor websites will be accepted.**

PROPOSAL NOTE 2: A Vendor proposing shall be approved and authorized by the manufacturer to sell, install, and service the brand(s) of product(s) proposed. Proposers responding to this Proposal Invitation shall submit an approval letter from each manufacturer for each product line proposed. The requirement to provide an approval letter from the manufacturer applies to both seller and installers. Manufacturers responding directly to this Proposal Invitation, in lieu of an authorization letter, shall submit a written explanation that the company is the manufacturer of the product line(s) proposed. Dealer authorization agreements will not be accepted as a substitute for the manufacturer authorization letter.

The manufacturer authorization letters must include the following:
1. Composed on manufacturer letterhead (an email message is not a substitute for the letter),
2. Addressed to "The Local Government Purchasing Cooperative",
3. Dated within the current calendar year,
4. List the regions in Texas and states that Vendor is authorized to sell, install, and service product(s) proposed, and
5. Name, Title, and Signature of Authorized Official from Manufacturer.

PROPOSAL NOTE 3: **"Pre-Owned/Reconditioned/Retired Rental"** shall be defined as equipment having been checked and inspected by a manufacturer-authorized dealer prior to sale and shall be no older than sixty (60) months as of the date of delivery. Proposers responding to this Proposal Invitation for **"Pre-Owned/Reconditioned/Retired Rental"** equipment must also be approved by the manufacturer to sell pre-owned/reconditioned/retired rental equipment for the brand submitted and must submit an approval letter from each manufacturer with the Proposal. Manufacturer authorization letters must include the regions in which equipment can be sold. Equipment listed as **"Pre-Owned/Reconditioned/Retired Rental"** shall be in good and working condition and shall include a minimum warranty of one-hundred eighty (180) days against any defect from workmanship and parts and shall cover equipment repairs and/or component replacement. Total equipment usage hours as displayed on the service meter will have a maximum of one thousand (1,000) hours per year of age and a minimum of seventy-five percent (75%) of wear remaining for tires, track, and/or ground engagement tools.

Vendors proposing multiple manufacturer product lines and/or catalog/price list per line item must submit the information as follows or proposal may not be considered:

- Select **"Add Alternate"** for each additional manufacturer product line and/or catalog/price list proposed
- Vendor's must list one specific percentage discount for each manufacturer and/or catalog/price list listed

Item Attributes

1. State Name of Manufacturer Catalog or Product Price list Proposed with Discount Percentage

NOTE: Do not reference SKU, Reference Numbers, Websites, and/or "See Attached/Enclosed".

No response

16

Section I: New Construction, Road, Bridge and Repair Equipment-PURCHASE ONLY

Discount (%) off catalog/price list for **Integrated Tool Carriers, Accessories and Attachments.** Catalog/Price list MUST be included or proposal will not be considered. Asphalt Distributors, Accessories and Attachments.

Total: 25%

Item Notes: **PROPOSAL NOTE 1:** Vendors shall submit catalog(s)/price list(s) with their Proposal response or the Proposal will not be considered. Vendors shall submit catalog(s)/price list(s) with the Proposal in a readily available and readable electronic format, with Excel or searchable PDF preferred. **No paper catalogs or manufacturer/vendor websites will be accepted.**

PROPOSAL NOTE 2: A Vendor proposing shall be approved and authorized by the manufacturer to sell, install, and service the brand(s) of product(s) proposed. Proposers responding to this Proposal Invitation shall submit an approval letter from each manufacturer for each product line proposed. The requirement to provide an approval letter from the manufacturer applies to both seller and installers. Manufacturers responding directly to this Proposal Invitation, in lieu of an authorization letter, shall submit a written explanation that the company is the manufacturer of the product line(s) proposed. Dealer authorization agreements will not be accepted as a substitute for the manufacturer authorization letter.

The manufacturer authorization letters must include the following:
1. Composed on manufacturer letterhead (an email message is not a substitute for the letter),
2. Addressed to "The Local Government Purchasing Cooperative",
3. Dated within the current calendar year,
4. List the regions in Texas and states that Vendor is authorized to sell, install, and service product(s) proposed, and
5. Name, Title, and Signature of Authorized Official from Manufacturer.

PROPOSAL NOTE 3: **"Pre-Owned/Reconditioned/Retired Rental"** shall be defined as equipment having been checked and inspected by a manufacturer-authorized dealer prior to sale and shall be no older than sixty (60) months as of the date of delivery. Proposers responding to this Proposal Invitation for **"Pre-Owned/Reconditioned/Retired Rental"** equipment must also be approved by the manufacturer to sell pre-owned/reconditioned/retired rental equipment for the brand submitted and must submit an approval letter from each manufacturer with the Proposal. Manufacturer authorization letters must include the regions in which equipment can be sold. Equipment listed as **"Pre-Owned/Reconditioned/Retired Rental"** shall be in good and working condition and shall include a minimum warranty of one-hundred eighty (180) days against any defect from workmanship and parts and shall cover equipment repairs and/or component replacement. Total equipment usage hours as displayed on the service meter will have a maximum of one thousand (1,000) hours per year of age and a minimum of seventy-five percent (75%) of wear remaining for tires, track, and/or ground engagement tools.

Vendors proposing multiple manufacturer product lines and/or catalog/price list per line item must submit the information as follows or proposal may not be considered:

- Select **"Add Alternate"** for each additional manufacturer product line and/or catalog/price list proposed
- Vendor's must list one specific percentage discount for each manufacturer and/or catalog/price list listed

Item Attributes

1. State Name of Manufacturer Catalog or Product Price list Proposed with Discount Percentage

NOTE: Do not reference SKU, Reference Numbers, Websites, and/or "See Attached/Enclosed".

Case Wheel Loader Price Book

Alternate 1

Section I: New Construction, Road, Bridge and Repair Equipment-PURCHASE ONLY

Discount (%) off catalog/price list for **Integrated Tool Carriers, Accessories and Attachments.** Catalog/Price list MUST be included or proposal will not be considered. Asphalt Distributors, Accessories and Attachments.

Total: 35%

Item Attributes

1. State Name of Manufacturer Catalog or Product Price list Proposed with Discount Percentage

NOTE: Do not reference SKU, Reference Numbers, Websites, and/or "See Attached/Enclosed".

Hyundai Pricelist

17 **Section I: New Construction, Road, Bridge and Repair Equipment-PURCHASE ONLY**

Discount (%) off catalog/price list for **Jack Hammers, Accessories and Attachments.** Catalog/Price list MUST be included or proposal will not be considered. Asphalt Distributors, Accessories and Attachments.

No Bid

Item Notes: **PROPOSAL NOTE 1:** Vendors shall submit catalog(s)/price list(s) with their Proposal response or the Proposal will not be considered. Vendors shall submit catalog(s)/price list(s) with the Proposal in a readily available and readable electronic format, with Excel or searchable PDF preferred. **No paper catalogs or manufacturer/vendor websites will be accepted.**

PROPOSAL NOTE 2: A Vendor proposing shall be approved and authorized by the manufacturer to sell, install, and service the brand(s) of product(s) proposed. Proposers responding to this Proposal Invitation shall submit an approval letter from each manufacturer for each product line proposed. The requirement to provide an approval letter from the manufacturer applies to both seller and installers. Manufacturers responding directly to this Proposal Invitation, in lieu of an authorization letter, shall submit a written explanation that the company is the manufacturer of the product line(s) proposed. Dealer authorization agreements will not be accepted as a substitute for the manufacturer authorization letter.

The manufacturer authorization letters must include the following:
1. Composed on manufacturer letterhead (an email message is not a substitute for the letter),
2. Addressed to "The Local Government Purchasing Cooperative",
3. Dated within the current calendar year,
4. List the regions in Texas and states that Vendor is authorized to sell, install, and service product(s) proposed, and
5. Name, Title, and Signature of Authorized Official from Manufacturer.

PROPOSAL NOTE 3: **"Pre-Owned/Reconditioned/Retired Rental"** shall be defined as equipment having been checked and inspected by a manufacturer-authorized dealer prior to sale and shall be no older than sixty (60) months as of the date of delivery. Proposers responding to this Proposal Invitation for **"Pre-Owned/Reconditioned/Retired Rental"** equipment must also be approved by the manufacturer to sell pre-owned/reconditioned/retired rental equipment for the brand submitted and must submit an approval letter from each manufacturer with the Proposal. Manufacturer authorization letters must include the regions in which equipment can be sold. Equipment listed as **"Pre-Owned/Reconditioned/Retired Rental"** shall be in good and working condition and shall include a minimum warranty of one-hundred eighty (180) days against any defect from workmanship and parts and shall cover equipment repairs and/or component replacement. Total equipment usage hours as displayed on the service meter will have a maximum of one thousand (1,000) hours per year of age and a minimum of seventy-five percent (75%) of wear remaining for tires, track, and/or ground engagement tools.

Vendors proposing multiple manufacturer product lines and/or catalog/price list per line item must submit the information as follows or proposal may not be considered:

- Select **"Add Alternate"** for each additional manufacturer product line and/or catalog/price list proposed
- Vendor's must list one specific percentage discount for each manufacturer and/or catalog/price list listed

Item Attributes

1. State Name of Manufacturer Catalog or Product Price list Proposed with Discount Percentage

NOTE: Do not reference SKU, Reference Numbers, Websites, and/or "See Attached/Enclosed".

No response

18

Section I: New Construction, Road, Bridge and Repair Equipment-PURCHASE ONLY

Discount (%) off catalog/price list for **Knuckle Boom Loaders, Accessories and Attachments.** Catalog/Price list MUST be included or proposal will not be considered. Asphalt Distributors, Accessories and Attachments.

No Bid

Item Notes: **PROPOSAL NOTE 1:** Vendors shall submit catalog(s)/price list(s) with their Proposal response or the Proposal will not be considered. Vendors shall submit catalog(s)/price list(s) with the Proposal in a readily available and readable electronic format, with Excel or searchable PDF preferred. **No paper catalogs or manufacturer/vendor websites will be accepted.**

PROPOSAL NOTE 2: A Vendor proposing shall be approved and authorized by the manufacturer to sell, install, and service the brand(s) of product(s) proposed. Proposers responding to this Proposal Invitation shall submit an approval letter from each manufacturer for each product line proposed. The requirement to provide an approval letter from the manufacturer applies to both seller and installers. Manufacturers responding directly to this Proposal Invitation, in lieu of an authorization letter, shall submit a written explanation that the company is the manufacturer of the product line(s) proposed. Dealer authorization agreements will not be accepted as a substitute for the manufacturer authorization letter.

The manufacturer authorization letters must include the following:
1. Composed on manufacturer letterhead (an email message is not a substitute for the letter),
2. Addressed to "The Local Government Purchasing Cooperative",
3. Dated within the current calendar year,
4. List the regions in Texas and states that Vendor is authorized to sell, install, and service product(s) proposed, and
5. Name, Title, and Signature of Authorized Official from Manufacturer.

PROPOSAL NOTE 3: **"Pre-Owned/Reconditioned/Retired Rental"** shall be defined as equipment having been checked and inspected by a manufacturer-authorized dealer prior to sale and shall be no older than sixty (60) months as of the date of delivery. Proposers responding to this Proposal Invitation for **"Pre-Owned/Reconditioned/Retired Rental"** equipment must also be approved by the manufacturer to sell pre-owned/reconditioned/retired rental equipment for the brand submitted and must submit an approval letter from each manufacturer with the Proposal. Manufacturer authorization letters must include the regions in which equipment can be sold. Equipment listed as **"Pre-Owned/Reconditioned/Retired Rental"** shall be in good and working condition and shall include a minimum warranty of one-hundred eighty (180) days against any defect from workmanship and parts and shall cover equipment repairs and/or component replacement. Total equipment usage hours as displayed on the service meter will have a maximum of one thousand (1,000) hours per year of age and a minimum of seventy-five percent (75%) of wear remaining for tires, track, and/or ground engagement tools.

Vendors proposing multiple manufacturer product lines and/or catalog/price list per line item must submit the information as follows or proposal may not be considered:

- Select **"Add Alternate"** for each additional manufacturer product line and/or catalog/price list proposed
- Vendor's must list one specific percentage discount for each manufacturer and/or catalog/price list listed

Item Attributes

1. State Name of Manufacturer Catalog or Product Price list Proposed with Discount Percentage

NOTE: Do not reference SKU, Reference Numbers, Websites, and/or "See Attached/Enclosed".

No response

19

Section I: New Construction, Road, Bridge and Repair Equipment-PURCHASE ONLY

Discount (%) off catalog/price list for **Material Handling Equipment, Accessories and Attachments.** Catalog/Price list MUST be included or proposal will not be considered. Asphalt Distributors, Accessories and Attachments.

Total: 15%

Item Notes: **PROPOSAL NOTE 1:** Vendors shall submit catalog(s)/price list(s) with their Proposal response or the Proposal will not be considered. Vendors shall submit catalog(s)/price list(s) with the Proposal in a readily available and readable electronic format, with Excel or searchable PDF preferred. **No paper catalogs or manufacturer/vendor websites will be accepted.**

PROPOSAL NOTE 2: A Vendor proposing shall be approved and authorized by the manufacturer to sell, install, and service the brand(s) of product(s) proposed. Proposers responding to this Proposal Invitation shall submit an approval letter from each manufacturer for each product line proposed. The requirement to provide an approval letter from the manufacturer applies to both seller and installers. Manufacturers responding directly to this Proposal Invitation, in lieu of an authorization letter, shall submit a written explanation that the company is the manufacturer of the product line(s) proposed. Dealer authorization agreements will not be accepted as a substitute for the manufacturer authorization letter.

The manufacturer authorization letters must include the following:

1. Composed on manufacturer letterhead (an email message is not a substitute for the letter),
2. Addressed to "The Local Government Purchasing Cooperative",
3. Dated within the current calendar year,
4. List the regions in Texas and states that Vendor is authorized to sell, install, and service product(s) proposed, and
5. Name, Title, and Signature of Authorized Official from Manufacturer.

PROPOSAL NOTE 3: **"Pre-Owned/Reconditioned/Retired Rental"** shall be defined as equipment having been checked and inspected by a manufacturer-authorized dealer prior to sale and shall be no older than sixty (60) months as of the date of delivery. Proposers responding to this Proposal Invitation for **"Pre-Owned/Reconditioned/Retired Rental"** equipment must also be approved by the manufacturer to sell pre-owned/reconditioned/retired rental equipment for the brand submitted and must submit an approval letter from each manufacturer with the Proposal. Manufacturer authorization letters must include the regions in which equipment can be sold. Equipment listed as **"Pre-Owned/Reconditioned/Retired Rental"** shall be in good and working condition and shall include a minimum warranty of one-hundred eighty (180) days against any defect from workmanship and parts and shall cover equipment repairs and/or component replacement. Total equipment usage hours as displayed on the service meter will have a maximum of one thousand (1,000) hours per year of age and a minimum of seventy-five percent (75%) of wear remaining for tires, track, and/or ground engagement tools.

Vendors proposing multiple manufacturer product lines and/or catalog/price list per line item must submit the information as follows or proposal may not be considered:

- Select **"Add Alternate"** for each additional manufacturer product line and/or catalog/price list proposed
- Vendor's must list one specific percentage discount for each manufacturer and/or catalog/price list listed

Item Attributes

1. State Name of Manufacturer Catalog or Product Price list Proposed with Discount Percentage

NOTE: Do not reference SKU, Reference Numbers, Websites, and/or "See Attached/Enclosed".

Skyjack Price Book

20

Section I: New Construction, Road, Bridge and Repair Equipment-PURCHASE ONLY

Discount (%) off catalog/price list for **Melter Crack Sealers** (Truck or Trailer Mounted)**, Accessories and Attachments.** Catalog/Price list MUST be included or proposal will not be considered. Asphalt Distributors, Accessories and Attachments.

No Bid

Item Notes: **PROPOSAL NOTE 1:** Vendors shall submit catalog(s)/price list(s) with their Proposal response or the Proposal will not be considered. Vendors shall submit catalog(s)/price list(s) with the Proposal in a readily available and readable electronic format, with Excel or searchable PDF preferred. **No paper catalogs or manufacturer/vendor websites will be accepted.**

PROPOSAL NOTE 2: A Vendor proposing shall be approved and authorized by the manufacturer to sell, install, and service the brand(s) of product(s) proposed. Proposers responding to this Proposal Invitation shall submit an approval letter from each manufacturer for each product line proposed. The requirement to provide an approval letter from the manufacturer applies to both seller and installers. Manufacturers responding directly to this Proposal Invitation, in lieu of an authorization letter, shall submit a written explanation that the company is the manufacturer of the product line(s) proposed. Dealer authorization agreements will not be accepted as a substitute for the manufacturer authorization letter.

The manufacturer authorization letters must include the following:
1. Composed on manufacturer letterhead (an email message is not a substitute for the letter),
2. Addressed to "The Local Government Purchasing Cooperative",
3. Dated within the current calendar year,
4. List the regions in Texas and states that Vendor is authorized to sell, install, and service product(s) proposed, and
5. Name, Title, and Signature of Authorized Official from Manufacturer.

PROPOSAL NOTE 3: **"Pre-Owned/Reconditioned/Retired Rental"** shall be defined as equipment having been checked and inspected by a manufacturer-authorized dealer prior to sale and shall be no older than sixty (60) months as of the date of delivery. Proposers responding to this Proposal Invitation for **"Pre-Owned/Reconditioned/Retired Rental"** equipment must also be approved by the manufacturer to sell pre-owned/reconditioned/retired rental equipment for the brand submitted and must submit an approval letter from each manufacturer with the Proposal. Manufacturer authorization letters must include the regions in which equipment can be sold. Equipment listed as **"Pre-Owned/Reconditioned/Retired Rental"** shall be in good and working condition and shall include a minimum warranty of one-hundred eighty (180) days against any defect from workmanship and parts and shall cover equipment repairs and/or component replacement. Total equipment usage hours as displayed on the service meter will have a maximum of one thousand (1,000) hours per year of age and a minimum of seventy-five percent (75%) of wear remaining for tires, track, and/or ground engagement tools.

Vendors proposing multiple manufacturer product lines and/or catalog/price list per line item must submit the information as follows or proposal may not be considered:

- Select **"Add Alternate"** for each additional manufacturer product line and/or catalog/price list proposed
- Vendor's must list one specific percentage discount for each manufacturer and/or catalog/price list listed

Item Attributes

1. State Name of Manufacturer Catalog or Product Price list Proposed with Discount Percentage

NOTE: Do not reference SKU, Reference Numbers, Websites, and/or "See Attached/Enclosed".

No response

21 **Section I: New Construction, Road, Bridge and Repair Equipment-PURCHASE ONLY**

Discount (%) off catalog/price list for **Mini Excavators, Accessories and Attachments.** Catalog/Price list MUST be included or proposal will not be considered. Asphalt Distributors, Accessories and Attachments.

Total: 25%

Item Notes: **PROPOSAL NOTE 1:** Vendors shall submit catalog(s)/price list(s) with their Proposal response or the Proposal will not be considered. Vendors shall submit catalog(s)/price list(s) with the Proposal in a readily available and readable electronic format, with Excel or searchable PDF preferred. **No paper catalogs or manufacturer/vendor websites will be accepted.**

PROPOSAL NOTE 2: A Vendor proposing shall be approved and authorized by the manufacturer to sell, install, and service the brand(s) of product(s) proposed. Proposers responding to this Proposal Invitation shall submit an approval letter from each manufacturer for each product line proposed. The requirement to provide an approval letter from the manufacturer applies to both seller and installers. Manufacturers responding directly to this Proposal Invitation, in lieu of an authorization letter, shall submit a written explanation that the company is the manufacturer of the product line(s) proposed. Dealer authorization agreements will not be accepted as a substitute for the manufacturer authorization letter.

The manufacturer authorization letters must include the following:
1. Composed on manufacturer letterhead (an email message is not a substitute for the letter),
2. Addressed to "The Local Government Purchasing Cooperative",
3. Dated within the current calendar year,
4. List the regions in Texas and states that Vendor is authorized to sell, install, and service product(s) proposed, and
5. Name, Title, and Signature of Authorized Official from Manufacturer.

PROPOSAL NOTE 3: **"Pre-Owned/Reconditioned/Retired Rental"** shall be defined as equipment having been checked and inspected by a manufacturer-authorized dealer prior to sale and shall be no older than sixty (60) months as of the date of delivery. Proposers responding to this Proposal Invitation for **"Pre-Owned/Reconditioned/Retired Rental"** equipment must also be approved by the manufacturer to sell pre-owned/reconditioned/retired rental equipment for the brand submitted and must submit an approval letter from each manufacturer with the Proposal. Manufacturer authorization letters must include the regions in which equipment can be sold. Equipment listed as **"Pre-Owned/Reconditioned/Retired Rental"** shall be in good and working condition and shall include a minimum warranty of one-hundred eighty (180) days against any defect from workmanship and parts and shall cover equipment repairs and/or component replacement. Total equipment usage hours as displayed on the service meter will have a maximum of one thousand (1,000) hours per year of age and a minimum of seventy-five percent (75%) of wear remaining for tires, track, and/or ground engagement tools.

Vendors proposing multiple manufacturer product lines and/or catalog/price list per line item must submit the information as follows or proposal may not be considered:

- Select **"Add Alternate"** for each additional manufacturer product line and/or catalog/price list proposed
- Vendor's must list one specific percentage discount for each manufacturer and/or catalog/price list listed

Item Attributes

1. State Name of Manufacturer Catalog or Product Price list Proposed with Discount Percentage

NOTE: Do not reference SKU, Reference Numbers, Websites, and/or "See Attached/Enclosed".

Case Mini Excavator Price Book

Alternate 1

Section I: New Construction, Road, Bridge and Repair Equipment-PURCHASE ONLY

Discount (%) off catalog/price list for **Mini Excavators, Accessories and Attachments.** Catalog/Price list MUST be included or proposal will not be considered. Asphalt Distributors, Accessories and Attachments.

Total: 10%

Item Attributes

1. State Name of Manufacturer Catalog or Product Price list Proposed with Discount Percentage

NOTE: Do not reference SKU, Reference Numbers, Websites, and/or "See Attached/Enclosed".

Takeuchi Price Book

22

Section I: New Construction, Road, Bridge and Repair Equipment-PURCHASE ONLY

Discount (%) off catalog/price list for **Motor Graders, Accessories and Attachments.** Catalog/Price list MUST be included or proposal will not be considered. Asphalt Distributors, Accessories and Attachments.

Total: 25%

Item Notes: **PROPOSAL NOTE 1:** Vendors shall submit catalog(s)/price list(s) with their Proposal response or the Proposal will not be considered. Vendors shall submit catalog(s)/price list(s) with the Proposal in a readily available and readable electronic format, with Excel or searchable PDF preferred. **No paper catalogs or manufacturer/vendor websites will be accepted.**

PROPOSAL NOTE 2: A Vendor proposing shall be approved and authorized by the manufacturer to sell, install, and service the brand(s) of product(s) proposed. Proposers responding to this Proposal Invitation shall submit an approval letter from each manufacturer for each product line proposed. The requirement to provide an approval letter from the manufacturer applies to both seller and installers. Manufacturers responding directly to this Proposal Invitation, in lieu of an authorization letter, shall submit a written explanation that the company is the manufacturer of the product line(s) proposed. Dealer authorization agreements will not be accepted as a substitute for the manufacturer authorization letter.

The manufacturer authorization letters must include the following:
1. Composed on manufacturer letterhead (an email message is not a substitute for the letter),
2. Addressed to "The Local Government Purchasing Cooperative",
3. Dated within the current calendar year,
4. List the regions in Texas and states that Vendor is authorized to sell, install, and service product(s) proposed, and
5. Name, Title, and Signature of Authorized Official from Manufacturer.

PROPOSAL NOTE 3: **"Pre-Owned/Reconditioned/Retired Rental"** shall be defined as equipment having been checked and inspected by a manufacturer-authorized dealer prior to sale and shall be no older than sixty (60) months as of the date of delivery. Proposers responding to this Proposal Invitation for **"Pre-Owned/Reconditioned/Retired Rental"** equipment must also be approved by the manufacturer to sell pre-owned/reconditioned/retired rental equipment for the brand submitted and must submit an approval letter from each manufacturer with the Proposal. Manufacturer authorization letters must include the regions in which equipment can be sold. Equipment listed as **"Pre-Owned/Reconditioned/Retired Rental"** shall be in good and working condition and shall include a minimum warranty of one-hundred eighty (180) days against any defect from workmanship and parts and shall cover equipment repairs and/or component replacement. Total equipment usage hours as displayed on the service meter will have a maximum of one thousand (1,000) hours per year of age and a minimum of seventy-five percent (75%) of wear remaining for tires, track, and/or ground engagement tools.

Vendors proposing multiple manufacturer product lines and/or catalog/price list per line item must submit the information as follows or proposal may not be considered:

- Select **"Add Alternate"** for each additional manufacturer product line and/or catalog/price list proposed
- Vendor's must list one specific percentage discount for each manufacturer and/or catalog/price list listed

Item Attributes

1. State Name of Manufacturer Catalog or Product Price list Proposed with Discount Percentage

NOTE: Do not reference SKU, Reference Numbers, Websites, and/or "See Attached/Enclosed".

Case Grader Price Book

2
3

Section I: New Construction, Road, Bridge and Repair Equipment-PURCHASE ONLY

Discount (%) off catalog/price list for **Multi Terrain Loaders, Accessories and Attachments.** Catalog/Price list MUST be included or proposal will not be considered. Asphalt Distributors, Accessories and Attachments.

No Bid

Item Notes: **PROPOSAL NOTE 1:** Vendors shall submit catalog(s)/price list(s) with their Proposal response or the Proposal will not be considered. Vendors shall submit catalog(s)/price list(s) with the Proposal in a readily available and readable electronic format, with Excel or searchable PDF preferred. **No paper catalogs or manufacturer/vendor websites will be accepted.**

PROPOSAL NOTE 2: A Vendor proposing shall be approved and authorized by the manufacturer to sell, install, and service the brand(s) of product(s) proposed. Proposers responding to this Proposal Invitation shall submit an approval letter from each manufacturer for each product line proposed. The requirement to provide an approval letter from the manufacturer applies to both seller and installers. Manufacturers responding directly to this Proposal Invitation, in lieu of an authorization letter, shall submit a written explanation that the company is the manufacturer of the product line(s) proposed. Dealer authorization agreements will not be accepted as a substitute for the manufacturer authorization letter.

The manufacturer authorization letters must include the following:
1. Composed on manufacturer letterhead (an email message is not a substitute for the letter),
2. Addressed to "The Local Government Purchasing Cooperative",
3. Dated within the current calendar year,
4. List the regions in Texas and states that Vendor is authorized to sell, install, and service product(s) proposed, and
5. Name, Title, and Signature of Authorized Official from Manufacturer.

PROPOSAL NOTE 3: **"Pre-Owned/Reconditioned/Retired Rental"** shall be defined as equipment having been checked and inspected by a manufacturer-authorized dealer prior to sale and shall be no older than sixty (60) months as of the date of delivery. Proposers responding to this Proposal Invitation for **"Pre-Owned/Reconditioned/Retired Rental"** equipment must also be approved by the manufacturer to sell pre-owned/reconditioned/retired rental equipment for the brand submitted and must submit an approval letter from each manufacturer with the Proposal. Manufacturer authorization letters must include the regions in which equipment can be sold. Equipment listed as **"Pre-Owned/Reconditioned/Retired Rental"** shall be in good and working condition and shall include a minimum warranty of one-hundred eighty (180) days against any defect from workmanship and parts and shall cover equipment repairs and/or component replacement. Total equipment usage hours as displayed on the service meter will have a maximum of one thousand (1,000) hours per year of age and a minimum of seventy-five percent (75%) of wear remaining for tires, track, and/or ground engagement tools.

Vendors proposing multiple manufacturer product lines and/or catalog/price list per line item must submit the information as follows or proposal may not be considered:

- Select **"Add Alternate"** for each additional manufacturer product line and/or catalog/price list proposed
- Vendor's must list one specific percentage discount for each manufacturer and/or catalog/price list listed

Item Attributes

1. State Name of Manufacturer Catalog or Product Price list Proposed with Discount Percentage

NOTE: Do not reference SKU, Reference Numbers, Websites, and/or "See Attached/Enclosed".

No response

24

Section I: New Construction, Road, Bridge and Repair Equipment-PURCHASE ONLY

Discount (%) off catalog/price list for **Paving Breakers and Milling Machines, Accessories and Attachments.** Catalog/Price list MUST be included or proposal will not be considered. Asphalt Distributors, Accessories and Attachments.

No Bid

Item Notes: **PROPOSAL NOTE 1:** Vendors shall submit catalog(s)/price list(s) with their Proposal response or the Proposal will not be considered. Vendors shall submit catalog(s)/price list(s) with the Proposal in a readily available and readable electronic format, with Excel or searchable PDF preferred. **No paper catalogs or manufacturer/vendor websites will be accepted.**

PROPOSAL NOTE 2: A Vendor proposing shall be approved and authorized by the manufacturer to sell, install, and service the brand(s) of product(s) proposed. Proposers responding to this Proposal Invitation shall submit an approval letter from each manufacturer for each product line proposed. The requirement to provide an approval letter from the manufacturer applies to both seller and installers. Manufacturers responding directly to this Proposal Invitation, in lieu of an authorization letter, shall submit a written explanation that the company is the manufacturer of the product line(s) proposed. Dealer authorization agreements will not be accepted as a substitute for the manufacturer authorization letter.

The manufacturer authorization letters must include the following:
1. Composed on manufacturer letterhead (an email message is not a substitute for the letter),
2. Addressed to "The Local Government Purchasing Cooperative",
3. Dated within the current calendar year,
4. List the regions in Texas and states that Vendor is authorized to sell, install, and service product(s) proposed, and
5. Name, Title, and Signature of Authorized Official from Manufacturer.

PROPOSAL NOTE 3: **"Pre-Owned/Reconditioned/Retired Rental"** shall be defined as equipment having been checked and inspected by a manufacturer-authorized dealer prior to sale and shall be no older than sixty (60) months as of the date of delivery. Proposers responding to this Proposal Invitation for **"Pre-Owned/Reconditioned/Retired Rental"** equipment must also be approved by the manufacturer to sell pre-owned/reconditioned/retired rental equipment for the brand submitted and must submit an approval letter from each manufacturer with the Proposal. Manufacturer authorization letters must include the regions in which equipment can be sold. Equipment listed as **"Pre-Owned/Reconditioned/Retired Rental"** shall be in good and working condition and shall include a minimum warranty of one-hundred eighty (180) days against any defect from workmanship and parts and shall cover equipment repairs and/or component replacement. Total equipment usage hours as displayed on the service meter will have a maximum of one thousand (1,000) hours per year of age and a minimum of seventy-five percent (75%) of wear remaining for tires, track, and/or ground engagement tools.

Vendors proposing multiple manufacturer product lines and/or catalog/price list per line item must submit the information as follows or proposal may not be considered:

- Select **"Add Alternate"** for each additional manufacturer product line and/or catalog/price list proposed
- Vendor's must list one specific percentage discount for each manufacturer and/or catalog/price list listed

Item Attributes

1. State Name of Manufacturer Catalog or Product Price list Proposed with Discount Percentage

NOTE: Do not reference SKU, Reference Numbers, Websites, and/or "See Attached/Enclosed".

No response

25

Section I: New Construction, Road, Bridge and Repair Equipment-PURCHASE ONLY

Discount (%) off catalog/price list for **Pipelaying Equipment, Accessories and Attachments.** Catalog/Price list MUST be included or proposal will not be considered. Asphalt Distributors, Accessories and Attachments.

No Bid

Item Notes: **PROPOSAL NOTE 1:** Vendors shall submit catalog(s)/price list(s) with their Proposal response or the Proposal will not be considered. Vendors shall submit catalog(s)/price list(s) with the Proposal in a readily available and readable electronic format, with Excel or searchable PDF preferred. **No paper catalogs or manufacturer/vendor websites will be accepted.**

PROPOSAL NOTE 2: A Vendor proposing shall be approved and authorized by the manufacturer to sell, install, and service the brand(s) of product(s) proposed. Proposers responding to this Proposal Invitation shall submit an approval letter from each manufacturer for each product line proposed. The requirement to provide an approval letter from the manufacturer applies to both seller and installers. Manufacturers responding directly to this Proposal Invitation, in lieu of an authorization letter, shall submit a written explanation that the company is the manufacturer of the product line(s) proposed. Dealer authorization agreements will not be accepted as a substitute for the manufacturer authorization letter.

The manufacturer authorization letters must include the following:
1. Composed on manufacturer letterhead (an email message is not a substitute for the letter),
2. Addressed to "The Local Government Purchasing Cooperative",
3. Dated within the current calendar year,
4. List the regions in Texas and states that Vendor is authorized to sell, install, and service product(s) proposed, and
5. Name, Title, and Signature of Authorized Official from Manufacturer.

PROPOSAL NOTE 3: **"Pre-Owned/Reconditioned/Retired Rental"** shall be defined as equipment having been checked and inspected by a manufacturer-authorized dealer prior to sale and shall be no older than sixty (60) months as of the date of delivery. Proposers responding to this Proposal Invitation for **"Pre-Owned/Reconditioned/Retired Rental"** equipment must also be approved by the manufacturer to sell pre-owned/reconditioned/retired rental equipment for the brand submitted and must submit an approval letter from each manufacturer with the Proposal. Manufacturer authorization letters must include the regions in which equipment can be sold. Equipment listed as **"Pre-Owned/Reconditioned/Retired Rental"** shall be in good and working condition and shall include a minimum warranty of one-hundred eighty (180) days against any defect from workmanship and parts and shall cover equipment repairs and/or component replacement. Total equipment usage hours as displayed on the service meter will have a maximum of one thousand (1,000) hours per year of age and a minimum of seventy-five percent (75%) of wear remaining for tires, track, and/or ground engagement tools.

Vendors proposing multiple manufacturer product lines and/or catalog/price list per line item must submit the information as follows or proposal may not be considered:

- Select **"Add Alternate"** for each additional manufacturer product line and/or catalog/price list proposed
- Vendor's must list one specific percentage discount for each manufacturer and/or catalog/price list listed

Item Attributes

1. State Name of Manufacturer Catalog or Product Price list Proposed with Discount Percentage

NOTE: Do not reference SKU, Reference Numbers, Websites, and/or "See Attached/Enclosed".

No response

26

Section I: New Construction, Road, Bridge and Repair Equipment-PURCHASE ONLY

Discount (%) off catalog/price list for **Pneumatic Compactors and Rollers, Accessories and Attachments.** Catalog/Price list MUST be included or proposal will not be considered. Asphalt Distributors, Accessories and Attachments.

Total: 25%

Item Notes: **PROPOSAL NOTE 1:** Vendors shall submit catalog(s)/price list(s) with their Proposal response or the Proposal will not be considered. Vendors shall submit catalog(s)/price list(s) with the Proposal in a readily available and readable electronic format, with Excel or searchable PDF preferred. **No paper catalogs or manufacturer/vendor websites will be accepted.**

PROPOSAL NOTE 2: A Vendor proposing shall be approved and authorized by the manufacturer to sell, install, and service the brand(s) of product(s) proposed. Proposers responding to this Proposal Invitation shall submit an approval letter from each manufacturer for each product line proposed. The requirement to provide an approval letter from the manufacturer applies to both seller and installers. Manufacturers responding directly to this Proposal Invitation, in lieu of an authorization letter, shall submit a written explanation that the company is the manufacturer of the product line(s) proposed. Dealer authorization agreements will not be accepted as a substitute for the manufacturer authorization letter.

The manufacturer authorization letters must include the following:
1. Composed on manufacturer letterhead (an email message is not a substitute for the letter),
2. Addressed to "The Local Government Purchasing Cooperative",
3. Dated within the current calendar year,
4. List the regions in Texas and states that Vendor is authorized to sell, install, and service product(s) proposed, and
5. Name, Title, and Signature of Authorized Official from Manufacturer.

PROPOSAL NOTE 3: **"Pre-Owned/Reconditioned/Retired Rental"** shall be defined as equipment having been checked and inspected by a manufacturer-authorized dealer prior to sale and shall be no older than sixty (60) months as of the date of delivery. Proposers responding to this Proposal Invitation for **"Pre-Owned/Reconditioned/Retired Rental"** equipment must also be approved by the manufacturer to sell pre-owned/reconditioned/retired rental equipment for the brand submitted and must submit an approval letter from each manufacturer with the Proposal. Manufacturer authorization letters must include the regions in which equipment can be sold. Equipment listed as **"Pre-Owned/Reconditioned/Retired Rental"** shall be in good and working condition and shall include a minimum warranty of one-hundred eighty (180) days against any defect from workmanship and parts and shall cover equipment repairs and/or component replacement. Total equipment usage hours as displayed on the service meter will have a maximum of one thousand (1,000) hours per year of age and a minimum of seventy-five percent (75%) of wear remaining for tires, track, and/or ground engagement tools.

Vendors proposing multiple manufacturer product lines and/or catalog/price list per line item must submit the information as follows or proposal may not be considered:

- Select **"Add Alternate"** for each additional manufacturer product line and/or catalog/price list proposed
- Vendor's must list one specific percentage discount for each manufacturer and/or catalog/price list listed

Item Attributes

1. State Name of Manufacturer Catalog or Product Price list Proposed with Discount Percentage

NOTE: Do not reference SKU, Reference Numbers, Websites, and/or "See Attached/Enclosed".

Case Compaction Price Book

27

Section I: New Construction, Road, Bridge and Repair Equipment-PURCHASE ONLY

Discount (%) off catalog/price list for **Pothole Patchers** (Trailer or Truck Mounted)**, Accessories and Attachments.** Catalog/Price list MUST be included or proposal will not be considered. Asphalt Distributors, Accessories and Attachments.

No Bid

Item Notes: **PROPOSAL NOTE 1:** Vendors shall submit catalog(s)/price list(s) with their Proposal response or the Proposal will not be considered. Vendors shall submit catalog(s)/price list(s) with the Proposal in a readily available and readable electronic format, with Excel or searchable PDF preferred. **No paper catalogs or manufacturer/vendor websites will be accepted.**

PROPOSAL NOTE 2: A Vendor proposing shall be approved and authorized by the manufacturer to sell, install, and service the brand(s) of product(s) proposed. Proposers responding to this Proposal Invitation shall submit an approval letter from each manufacturer for each product line proposed. The requirement to provide an approval letter from the manufacturer applies to both seller and installers. Manufacturers responding directly to this Proposal Invitation, in lieu of an authorization letter, shall submit a written explanation that the company is the manufacturer of the product line(s) proposed. Dealer authorization agreements will not be accepted as a substitute for the manufacturer authorization letter.

The manufacturer authorization letters must include the following:
1. Composed on manufacturer letterhead (an email message is not a substitute for the letter),
2. Addressed to "The Local Government Purchasing Cooperative",
3. Dated within the current calendar year,
4. List the regions in Texas and states that Vendor is authorized to sell, install, and service product(s) proposed, and
5. Name, Title, and Signature of Authorized Official from Manufacturer.

PROPOSAL NOTE 3: **"Pre-Owned/Reconditioned/Retired Rental"** shall be defined as equipment having been checked and inspected by a manufacturer-authorized dealer prior to sale and shall be no older than sixty (60) months as of the date of delivery. Proposers responding to this Proposal Invitation for **"Pre-Owned/Reconditioned/Retired Rental"** equipment must also be approved by the manufacturer to sell pre-owned/reconditioned/retired rental equipment for the brand submitted and must submit an approval letter from each manufacturer with the Proposal. Manufacturer authorization letters must include the regions in which equipment can be sold. Equipment listed as **"Pre-Owned/Reconditioned/Retired Rental"** shall be in good and working condition and shall include a minimum warranty of one-hundred eighty (180) days against any defect from workmanship and parts and shall cover equipment repairs and/or component replacement. Total equipment usage hours as displayed on the service meter will have a maximum of one thousand (1,000) hours per year of age and a minimum of seventy-five percent (75%) of wear remaining for tires, track, and/or ground engagement tools.

Vendors proposing multiple manufacturer product lines and/or catalog/price list per line item must submit the information as follows or proposal may not be considered:

- Select **"Add Alternate"** for each additional manufacturer product line and/or catalog/price list proposed
- Vendor's must list one specific percentage discount for each manufacturer and/or catalog/price list listed

Item Attributes

1. State Name of Manufacturer Catalog or Product Price list Proposed with Discount Percentage

NOTE: Do not reference SKU, Reference Numbers, Websites, and/or "See Attached/Enclosed".

No response

28

Section I: New Construction, Road, Bridge and Repair Equipment-PURCHASE ONLY

Discount (%) off catalog/price list for **Road Broom Equipment, Accessories and Attachments.** Catalog/Price list MUST be included or proposal will not be considered. Asphalt Distributors, Accessories and Attachments.

Total: 10%

Item Notes: **PROPOSAL NOTE 1:** Vendors shall submit catalog(s)/price list(s) with their Proposal response or the Proposal will not be considered. Vendors shall submit catalog(s)/price list(s) with the Proposal in a readily available and readable electronic format, with Excel or searchable PDF preferred. **No paper catalogs or manufacturer/vendor websites will be accepted.**

PROPOSAL NOTE 2: A Vendor proposing shall be approved and authorized by the manufacturer to sell, install, and service the brand(s) of product(s) proposed. Proposers responding to this Proposal Invitation shall submit an approval letter from each manufacturer for each product line proposed. The requirement to provide an approval letter from the manufacturer applies to both seller and installers. Manufacturers responding directly to this Proposal Invitation, in lieu of an authorization letter, shall submit a written explanation that the company is the manufacturer of the product line(s) proposed. Dealer authorization agreements will not be accepted as a substitute for the manufacturer authorization letter.

The manufacturer authorization letters must include the following:
1. Composed on manufacturer letterhead (an email message is not a substitute for the letter),
2. Addressed to "The Local Government Purchasing Cooperative",
3. Dated within the current calendar year,
4. List the regions in Texas and states that Vendor is authorized to sell, install, and service product(s) proposed, and
5. Name, Title, and Signature of Authorized Official from Manufacturer.

PROPOSAL NOTE 3: **"Pre-Owned/Reconditioned/Retired Rental"** shall be defined as equipment having been checked and inspected by a manufacturer-authorized dealer prior to sale and shall be no older than sixty (60) months as of the date of delivery. Proposers responding to this Proposal Invitation for **"Pre-Owned/Reconditioned/Retired Rental"** equipment must also be approved by the manufacturer to sell pre-owned/reconditioned/retired rental equipment for the brand submitted and must submit an approval letter from each manufacturer with the Proposal. Manufacturer authorization letters must include the regions in which equipment can be sold. Equipment listed as **"Pre-Owned/Reconditioned/Retired Rental"** shall be in good and working condition and shall include a minimum warranty of one-hundred eighty (180) days against any defect from workmanship and parts and shall cover equipment repairs and/or component replacement. Total equipment usage hours as displayed on the service meter will have a maximum of one thousand (1,000) hours per year of age and a minimum of seventy-five percent (75%) of wear remaining for tires, track, and/or ground engagement tools.

Vendors proposing multiple manufacturer product lines and/or catalog/price list per line item must submit the information as follows or proposal may not be considered:

- Select **"Add Alternate"** for each additional manufacturer product line and/or catalog/price list proposed
- Vendor's must list one specific percentage discount for each manufacturer and/or catalog/price list listed

Item Attributes

1. State Name of Manufacturer Catalog or Product Price list Proposed with Discount Percentage

NOTE: Do not reference SKU, Reference Numbers, Websites, and/or "See Attached/Enclosed".

Broce Price List

29 **Section I: New Construction, Road, Bridge and Repair Equipment-PURCHASE ONLY**

Discount (%) off catalog/price list for **Road Reclaiming Equipment, Accessories and Attachments.** Catalog/Price list MUST be included or proposal will not be considered. Asphalt Distributors, Accessories and Attachments.

No Bid

Item Notes: **PROPOSAL NOTE 1:** Vendors shall submit catalog(s)/price list(s) with their Proposal response or the Proposal will not be considered. Vendors shall submit catalog(s)/price list(s) with the Proposal in a readily available and readable electronic format, with Excel or searchable PDF preferred. **No paper catalogs or manufacturer/vendor websites will be accepted.**

PROPOSAL NOTE 2: A Vendor proposing shall be approved and authorized by the manufacturer to sell, install, and service the brand(s) of product(s) proposed. Proposers responding to this Proposal Invitation shall submit an approval letter from each manufacturer for each product line proposed. The requirement to provide an approval letter from the manufacturer applies to both seller and installers. Manufacturers responding directly to this Proposal Invitation, in lieu of an authorization letter, shall submit a written explanation that the company is the manufacturer of the product line(s) proposed. Dealer authorization agreements will not be accepted as a substitute for the manufacturer authorization letter.

The manufacturer authorization letters must include the following:
1. Composed on manufacturer letterhead (an email message is not a substitute for the letter),
2. Addressed to "The Local Government Purchasing Cooperative",
3. Dated within the current calendar year,
4. List the regions in Texas and states that Vendor is authorized to sell, install, and service product(s) proposed, and
5. Name, Title, and Signature of Authorized Official from Manufacturer.

PROPOSAL NOTE 3: **"Pre-Owned/Reconditioned/Retired Rental"** shall be defined as equipment having been checked and inspected by a manufacturer-authorized dealer prior to sale and shall be no older than sixty (60) months as of the date of delivery. Proposers responding to this Proposal Invitation for **"Pre-Owned/Reconditioned/Retired Rental"** equipment must also be approved by the manufacturer to sell pre-owned/reconditioned/retired rental equipment for the brand submitted and must submit an approval letter from each manufacturer with the Proposal. Manufacturer authorization letters must include the regions in which equipment can be sold. Equipment listed as **"Pre-Owned/Reconditioned/Retired Rental"** shall be in good and working condition and shall include a minimum warranty of one-hundred eighty (180) days against any defect from workmanship and parts and shall cover equipment repairs and/or component replacement. Total equipment usage hours as displayed on the service meter will have a maximum of one thousand (1,000) hours per year of age and a minimum of seventy-five percent (75%) of wear remaining for tires, track, and/or ground engagement tools.

Vendors proposing multiple manufacturer product lines and/or catalog/price list per line item must submit the information as follows or proposal may not be considered:

- Select **"Add Alternate"** for each additional manufacturer product line and/or catalog/price list proposed
- Vendor's must list one specific percentage discount for each manufacturer and/or catalog/price list listed

Item Attributes

1. State Name of Manufacturer Catalog or Product Price list Proposed with Discount Percentage

NOTE: Do not reference SKU, Reference Numbers, Websites, and/or "See Attached/Enclosed".

No response

30 **Section I: New Construction, Road, Bridge and Repair Equipment-PURCHASE ONLY**

Discount (%) off catalog/price list for **Scrapers, Accessories and Attachments.** Catalog/Price list MUST be included or proposal will not be considered. Asphalt Distributors, Accessories and Attachments.

No Bid

Item Notes: **PROPOSAL NOTE 1:** Vendors shall submit catalog(s)/price list(s) with their Proposal response or the Proposal will not be considered. Vendors shall submit catalog(s)/price list(s) with the Proposal in a readily available and readable electronic format, with Excel or searchable PDF preferred. **No paper catalogs or manufacturer/vendor websites will be accepted.**

PROPOSAL NOTE 2: A Vendor proposing shall be approved and authorized by the manufacturer to sell, install, and service the brand(s) of product(s) proposed. Proposers responding to this Proposal Invitation shall submit an approval letter from each manufacturer for each product line proposed. The requirement to provide an approval letter from the manufacturer applies to both seller and installers. Manufacturers responding directly to this Proposal Invitation, in lieu of an authorization letter, shall submit a written explanation that the company is the manufacturer of the product line(s) proposed. Dealer authorization agreements will not be accepted as a substitute for the manufacturer authorization letter.

The manufacturer authorization letters must include the following:
1. Composed on manufacturer letterhead (an email message is not a substitute for the letter),
2. Addressed to "The Local Government Purchasing Cooperative",
3. Dated within the current calendar year,
4. List the regions in Texas and states that Vendor is authorized to sell, install, and service product(s) proposed, and
5. Name, Title, and Signature of Authorized Official from Manufacturer.

PROPOSAL NOTE 3: **"Pre-Owned/Reconditioned/Retired Rental"** shall be defined as equipment having been checked and inspected by a manufacturer-authorized dealer prior to sale and shall be no older than sixty (60) months as of the date of delivery. Proposers responding to this Proposal Invitation for **"Pre-Owned/Reconditioned/Retired Rental"** equipment must also be approved by the manufacturer to sell pre-owned/reconditioned/retired rental equipment for the brand submitted and must submit an approval letter from each manufacturer with the Proposal. Manufacturer authorization letters must include the regions in which equipment can be sold. Equipment listed as **"Pre-Owned/Reconditioned/Retired Rental"** shall be in good and working condition and shall include a minimum warranty of one-hundred eighty (180) days against any defect from workmanship and parts and shall cover equipment repairs and/or component replacement. Total equipment usage hours as displayed on the service meter will have a maximum of one thousand (1,000) hours per year of age and a minimum of seventy-five percent (75%) of wear remaining for tires, track, and/or ground engagement tools.

Vendors proposing multiple manufacturer product lines and/or catalog/price list per line item must submit the information as follows or proposal may not be considered:

- Select **"Add Alternate"** for each additional manufacturer product line and/or catalog/price list proposed
- Vendor's must list one specific percentage discount for each manufacturer and/or catalog/price list listed

Item Attributes

1. State Name of Manufacturer Catalog or Product Price list Proposed with Discount Percentage

NOTE: Do not reference SKU, Reference Numbers, Websites, and/or "See Attached/Enclosed".

No response

31 **Section I: New Construction, Road, Bridge and Repair Equipment-PURCHASE ONLY**

Discount (%) off catalog/price list for **Skid Steer Loaders, Accessories and Attachments.** Catalog/Price list MUST be included or proposal will not be considered. Asphalt Distributors, Accessories and Attachments.

Total: 25%

Item Notes: **PROPOSAL NOTE 1:** Vendors shall submit catalog(s)/price list(s) with their Proposal response or the Proposal will not be considered. Vendors shall submit catalog(s)/price list(s) with the Proposal in a readily available and readable electronic format, with Excel or searchable PDF preferred. **No paper catalogs or manufacturer/vendor websites will be accepted.**

PROPOSAL NOTE 2: A Vendor proposing shall be approved and authorized by the manufacturer to sell, install, and service the brand(s) of product(s) proposed. Proposers responding to this Proposal Invitation shall submit an approval letter from each manufacturer for each product line proposed. The requirement to provide an approval letter from the manufacturer applies to both seller and installers. Manufacturers responding directly to this Proposal Invitation, in lieu of an authorization letter, shall submit a written explanation that the company is the manufacturer of the product line(s) proposed. Dealer authorization agreements will not be accepted as a substitute for the manufacturer authorization letter.

The manufacturer authorization letters must include the following:
1. Composed on manufacturer letterhead (an email message is not a substitute for the letter),
2. Addressed to "The Local Government Purchasing Cooperative",
3. Dated within the current calendar year,
4. List the regions in Texas and states that Vendor is authorized to sell, install, and service product(s) proposed, and
5. Name, Title, and Signature of Authorized Official from Manufacturer.

PROPOSAL NOTE 3: **"Pre-Owned/Reconditioned/Retired Rental"** shall be defined as equipment having been checked and inspected by a manufacturer-authorized dealer prior to sale and shall be no older than sixty (60) months as of the date of delivery. Proposers responding to this Proposal Invitation for **"Pre-Owned/Reconditioned/Retired Rental"** equipment must also be approved by the manufacturer to sell pre-owned/reconditioned/retired rental equipment for the brand submitted and must submit an approval letter from each manufacturer with the Proposal. Manufacturer authorization letters must include the regions in which equipment can be sold. Equipment listed as **"Pre-Owned/Reconditioned/Retired Rental"** shall be in good and working condition and shall include a minimum warranty of one-hundred eighty (180) days against any defect from workmanship and parts and shall cover equipment repairs and/or component replacement. Total equipment usage hours as displayed on the service meter will have a maximum of one thousand (1,000) hours per year of age and a minimum of seventy-five percent (75%) of wear remaining for tires, track, and/or ground engagement tools.

Vendors proposing multiple manufacturer product lines and/or catalog/price list per line item must submit the information as follows or proposal may not be considered:

- Select **"Add Alternate"** for each additional manufacturer product line and/or catalog/price list proposed
- Vendor's must list one specific percentage discount for each manufacturer and/or catalog/price list listed

Item Attributes

1. State Name of Manufacturer Catalog or Product Price list Proposed with Discount Percentage

NOTE: Do not reference SKU, Reference Numbers, Websites, and/or "See Attached/Enclosed".

Case SSL Price Book

Alternate 1

Section I: New Construction, Road, Bridge and Repair Equipment-PURCHASE ONLY

Discount (%) off catalog/price list for **Skid Steer Loaders, Accessories and Attachments.** Catalog/Price list MUST be included or proposal will not be considered. Asphalt Distributors, Accessories and Attachments.

Total: 10%

Item Attributes

1. State Name of Manufacturer Catalog or Product Price list Proposed with Discount Percentage

NOTE: Do not reference SKU, Reference Numbers, Websites, and/or "See Attached/Enclosed".

Takeuchi Price Book

32

Section I: New Construction, Road, Bridge and Repair Equipment-PURCHASE ONLY

Discount (%) off catalog/price list for **Soil Stabilizing Equipment, Accessories and Attachments.** Catalog/Price list MUST be included or proposal will not be considered. Asphalt Distributors, Accessories and Attachments.

No Bid

Item Notes: **PROPOSAL NOTE 1:** Vendors shall submit catalog(s)/price list(s) with their Proposal response or the Proposal will not be considered. Vendors shall submit catalog(s)/price list(s) with the Proposal in a readily available and readable electronic format, with Excel or searchable PDF preferred. **No paper catalogs or manufacturer/vendor websites will be accepted.**

PROPOSAL NOTE 2: A Vendor proposing shall be approved and authorized by the manufacturer to sell, install, and service the brand(s) of product(s) proposed. Proposers responding to this Proposal Invitation shall submit an approval letter from each manufacturer for each product line proposed. The requirement to provide an approval letter from the manufacturer applies to both seller and installers. Manufacturers responding directly to this Proposal Invitation, in lieu of an authorization letter, shall submit a written explanation that the company is the manufacturer of the product line(s) proposed. Dealer authorization agreements will not be accepted as a substitute for the manufacturer authorization letter.

The manufacturer authorization letters must include the following:
1. Composed on manufacturer letterhead (an email message is not a substitute for the letter),
2. Addressed to "The Local Government Purchasing Cooperative",
3. Dated within the current calendar year,
4. List the regions in Texas and states that Vendor is authorized to sell, install, and service product(s) proposed, and
5. Name, Title, and Signature of Authorized Official from Manufacturer.

PROPOSAL NOTE 3: **"Pre-Owned/Reconditioned/Retired Rental"** shall be defined as equipment having been checked and inspected by a manufacturer-authorized dealer prior to sale and shall be no older than sixty (60) months as of the date of delivery. Proposers responding to this Proposal Invitation for **"Pre-Owned/Reconditioned/Retired Rental"** equipment must also be approved by the manufacturer to sell pre-owned/reconditioned/retired rental equipment for the brand submitted and must submit an approval letter from each manufacturer with the Proposal. Manufacturer authorization letters must include the regions in which equipment can be sold. Equipment listed as **"Pre-Owned/Reconditioned/Retired Rental"** shall be in good and working condition and shall include a minimum warranty of one-hundred eighty (180) days against any defect from workmanship and parts and shall cover equipment repairs and/or component replacement. Total equipment usage hours as displayed on the service meter will have a maximum of one thousand (1,000) hours per year of age and a minimum of seventy-five percent (75%) of wear remaining for tires, track, and/or ground engagement tools.

Vendors proposing multiple manufacturer product lines and/or catalog/price list per line item must submit the information as follows or proposal may not be considered:

- Select **"Add Alternate"** for each additional manufacturer product line and/or catalog/price list proposed
- Vendor's must list one specific percentage discount for each manufacturer and/or catalog/price list listed

Item Attributes

1. State Name of Manufacturer Catalog or Product Price list Proposed with Discount Percentage

NOTE: Do not reference SKU, Reference Numbers, Websites, and/or "See Attached/Enclosed".

No response

33

Section I: New Construction, Road, Bridge and Repair Equipment-PURCHASE ONLY

Discount (%) off catalog/price list for **Telescopic Handlers, Accessories and Attachments.** Catalog/Price list MUST be included or proposal will not be considered. Asphalt Distributors, Accessories and Attachments.

Total: 15%

Item Notes: **PROPOSAL NOTE 1:** Vendors shall submit catalog(s)/price list(s) with their Proposal response or the Proposal will not be considered. Vendors shall submit catalog(s)/price list(s) with the Proposal in a readily available and readable electronic format, with Excel or searchable PDF preferred. **No paper catalogs or manufacturer/vendor websites will be accepted.**

PROPOSAL NOTE 2: A Vendor proposing shall be approved and authorized by the manufacturer to sell, install, and service the brand(s) of product(s) proposed. Proposers responding to this Proposal Invitation shall submit an approval letter from each manufacturer for each product line proposed. The requirement to provide an approval letter from the manufacturer applies to both seller and installers. Manufacturers responding directly to this Proposal Invitation, in lieu of an authorization letter, shall submit a written explanation that the company is the manufacturer of the product line(s) proposed. Dealer authorization agreements will not be accepted as a substitute for the manufacturer authorization letter.

The manufacturer authorization letters must include the following:
1. Composed on manufacturer letterhead (an email message is not a substitute for the letter),
2. Addressed to "The Local Government Purchasing Cooperative",
3. Dated within the current calendar year,
4. List the regions in Texas and states that Vendor is authorized to sell, install, and service product(s) proposed, and
5. Name, Title, and Signature of Authorized Official from Manufacturer.

PROPOSAL NOTE 3: **"Pre-Owned/Reconditioned/Retired Rental"** shall be defined as equipment having been checked and inspected by a manufacturer-authorized dealer prior to sale and shall be no older than sixty (60) months as of the date of delivery. Proposers responding to this Proposal Invitation for **"Pre-Owned/Reconditioned/Retired Rental"** equipment must also be approved by the manufacturer to sell pre-owned/reconditioned/retired rental equipment for the brand submitted and must submit an approval letter from each manufacturer with the Proposal. Manufacturer authorization letters must include the regions in which equipment can be sold. Equipment listed as **"Pre-Owned/Reconditioned/Retired Rental"** shall be in good and working condition and shall include a minimum warranty of one-hundred eighty (180) days against any defect from workmanship and parts and shall cover equipment repairs and/or component replacement. Total equipment usage hours as displayed on the service meter will have a maximum of one thousand (1,000) hours per year of age and a minimum of seventy-five percent (75%) of wear remaining for tires, track, and/or ground engagement tools.

Vendors proposing multiple manufacturer product lines and/or catalog/price list per line item must submit the information as follows or proposal may not be considered:

- Select **"Add Alternate"** for each additional manufacturer product line and/or catalog/price list proposed
- Vendor's must list one specific percentage discount for each manufacturer and/or catalog/price list listed

Item Attributes

1. State Name of Manufacturer Catalog or Product Price list Proposed with Discount Percentage

NOTE: Do not reference SKU, Reference Numbers, Websites, and/or "See Attached/Enclosed".

Skyjack Price Book

3
4

Section I: New Construction, Road, Bridge and Repair Equipment-PURCHASE ONLY

Discount (%) off catalog/price list for **Track Loaders, Accessories and Attachments.** Catalog/Price list MUST be included or proposal will not be considered. Asphalt Distributors, Accessories and Attachments.

Total: 25%

Item Notes: **PROPOSAL NOTE 1:** Vendors shall submit catalog(s)/price list(s) with their Proposal response or the Proposal will not be considered. Vendors shall submit catalog(s)/price list(s) with the Proposal in a readily available and readable electronic format, with Excel or searchable PDF preferred. **No paper catalogs or manufacturer/vendor websites will be accepted.**

PROPOSAL NOTE 2: A Vendor proposing shall be approved and authorized by the manufacturer to sell, install, and service the brand(s) of product(s) proposed. Proposers responding to this Proposal Invitation shall submit an approval letter from each manufacturer for each product line proposed. The requirement to provide an approval letter from the manufacturer applies to both seller and installers. Manufacturers responding directly to this Proposal Invitation, in lieu of an authorization letter, shall submit a written explanation that the company is the manufacturer of the product line(s) proposed. Dealer authorization agreements will not be accepted as a substitute for the manufacturer authorization letter.

The manufacturer authorization letters must include the following:
1. Composed on manufacturer letterhead (an email message is not a substitute for the letter),
2. Addressed to "The Local Government Purchasing Cooperative",
3. Dated within the current calendar year,
4. List the regions in Texas and states that Vendor is authorized to sell, install, and service product(s) proposed, and
5. Name, Title, and Signature of Authorized Official from Manufacturer.

PROPOSAL NOTE 3: **"Pre-Owned/Reconditioned/Retired Rental"** shall be defined as equipment having been checked and inspected by a manufacturer-authorized dealer prior to sale and shall be no older than sixty (60) months as of the date of delivery. Proposers responding to this Proposal Invitation for **"Pre-Owned/Reconditioned/Retired Rental"** equipment must also be approved by the manufacturer to sell pre-owned/reconditioned/retired rental equipment for the brand submitted and must submit an approval letter from each manufacturer with the Proposal. Manufacturer authorization letters must include the regions in which equipment can be sold. Equipment listed as **"Pre-Owned/Reconditioned/Retired Rental"** shall be in good and working condition and shall include a minimum warranty of one-hundred eighty (180) days against any defect from workmanship and parts and shall cover equipment repairs and/or component replacement. Total equipment usage hours as displayed on the service meter will have a maximum of one thousand (1,000) hours per year of age and a minimum of seventy-five percent (75%) of wear remaining for tires, track, and/or ground engagement tools.

Vendors proposing multiple manufacturer product lines and/or catalog/price list per line item must submit the information as follows or proposal may not be considered:

- Select **"Add Alternate"** for each additional manufacturer product line and/or catalog/price list proposed
- Vendor's must list one specific percentage discount for each manufacturer and/or catalog/price list listed

Item Attributes

1. State Name of Manufacturer Catalog or Product Price list Proposed with Discount Percentage

NOTE: Do not reference SKU, Reference Numbers, Websites, and/or "See Attached/Enclosed".

Case CTL Price Book

Alternate 1

Section I: New Construction, Road, Bridge and Repair Equipment-PURCHASE ONLY

Discount (%) off catalog/price list for **Track Loaders, Accessories and Attachments.** Catalog/Price list MUST be included or proposal will not be considered. Asphalt Distributors, Accessories and Attachments.

Total: 10%

Item Attributes

1. State Name of Manufacturer Catalog or Product Price list Proposed with Discount Percentage

NOTE: Do not reference SKU, Reference Numbers, Websites, and/or "See Attached/Enclosed".

Takeuchi Price Book

35

Section I: New Construction, Road, Bridge and Repair Equipment-PURCHASE ONLY

Discount (%) off catalog/price list for **Track and Wheel Material Handlers, Accessories and Attachments.** Catalog/Price list MUST be included or proposal will not be considered. Asphalt Distributors, Accessories and Attachments.

Total: 35%

Item Notes: **PROPOSAL NOTE 1:** Vendors shall submit catalog(s)/price list(s) with their Proposal response or the Proposal will not be considered. Vendors shall submit catalog(s)/price list(s) with the Proposal in a readily available and readable electronic format, with Excel or searchable PDF preferred. **No paper catalogs or manufacturer/vendor websites will be accepted.**

PROPOSAL NOTE 2: A Vendor proposing shall be approved and authorized by the manufacturer to sell, install, and service the brand(s) of product(s) proposed. Proposers responding to this Proposal Invitation shall submit an approval letter from each manufacturer for each product line proposed. The requirement to provide an approval letter from the manufacturer applies to both seller and installers. Manufacturers responding directly to this Proposal Invitation, in lieu of an authorization letter, shall submit a written explanation that the company is the manufacturer of the product line(s) proposed. Dealer authorization agreements will not be accepted as a substitute for the manufacturer authorization letter.

The manufacturer authorization letters must include the following:

1. Composed on manufacturer letterhead (an email message is not a substitute for the letter),
2. Addressed to "The Local Government Purchasing Cooperative",
3. Dated within the current calendar year,
4. List the regions in Texas and states that Vendor is authorized to sell, install, and service product(s) proposed, and
5. Name, Title, and Signature of Authorized Official from Manufacturer.

PROPOSAL NOTE 3: **"Pre-Owned/Reconditioned/Retired Rental"** shall be defined as equipment having been checked and inspected by a manufacturer-authorized dealer prior to sale and shall be no older than sixty (60) months as of the date of delivery. Proposers responding to this Proposal Invitation for **"Pre-Owned/Reconditioned/Retired Rental"** equipment must also be approved by the manufacturer to sell pre-owned/reconditioned/retired rental equipment for the brand submitted and must submit an approval letter from each manufacturer with the Proposal. Manufacturer authorization letters must include the regions in which equipment can be sold. Equipment listed as **"Pre-Owned/Reconditioned/Retired Rental"** shall be in good and working condition and shall include a minimum warranty of one-hundred eighty (180) days against any defect from workmanship and parts and shall cover equipment repairs and/or component replacement. Total equipment usage hours as displayed on the service meter will have a maximum of one thousand (1,000) hours per year of age and a minimum of seventy-five percent (75%) of wear remaining for tires, track, and/or ground engagement tools.

Vendors proposing multiple manufacturer product lines and/or catalog/price list per line item must submit the information as follows or proposal may not be considered:

- Select **"Add Alternate"** for each additional manufacturer product line and/or catalog/price list proposed
- Vendor's must list one specific percentage discount for each manufacturer and/or catalog/price list listed

Item Attributes

1. State Name of Manufacturer Catalog or Product Price list Proposed with Discount Percentage

NOTE: Do not reference SKU, Reference Numbers, Websites, and/or "See Attached/Enclosed".

Hyundai Price List

Alternate 1

Section I: New Construction, Road, Bridge and Repair Equipment-PURCHASE ONLY
Discount (%) off catalog/price list for **Track and Wheel Material Handlers, Accessories and Attachments.** Catalog/Price list MUST be included or proposal will not be considered. Asphalt Distributors, Accessories and Attachments.

Total: 20%

Item Attributes

1. State Name of Manufacturer Catalog or Product Price list Proposed with Discount Percentage

NOTE: Do not reference SKU, Reference Numbers, Websites, and/or "See Attached/Enclosed".

Linkbelt Price List

36

Section I: New Construction, Road, Bridge and Repair Equipment-PURCHASE ONLY

Discount (%) off catalog/price list for **Track-Type Tractors and Dozers, Accessories and Attachments.** Catalog/Price list MUST be included or proposal will not be considered. Asphalt Distributors, Accessories and Attachments.

Total: 25%

Item Notes: **PROPOSAL NOTE 1:** Vendors shall submit catalog(s)/price list(s) with their Proposal response or the Proposal will not be considered. Vendors shall submit catalog(s)/price list(s) with the Proposal in a readily available and readable electronic format, with Excel or searchable PDF preferred. **No paper catalogs or manufacturer/vendor websites will be accepted.**

PROPOSAL NOTE 2: A Vendor proposing shall be approved and authorized by the manufacturer to sell, install, and service the brand(s) of product(s) proposed. Proposers responding to this Proposal Invitation shall submit an approval letter from each manufacturer for each product line proposed. The requirement to provide an approval letter from the manufacturer applies to both seller and installers. Manufacturers responding directly to this Proposal Invitation, in lieu of an authorization letter, shall submit a written explanation that the company is the manufacturer of the product line(s) proposed. Dealer authorization agreements will not be accepted as a substitute for the manufacturer authorization letter.

The manufacturer authorization letters must include the following:

1. Composed on manufacturer letterhead (an email message is not a substitute for the letter),
2. Addressed to "The Local Government Purchasing Cooperative",
3. Dated within the current calendar year,
4. List the regions in Texas and states that Vendor is authorized to sell, install, and service product(s) proposed, and
5. Name, Title, and Signature of Authorized Official from Manufacturer.

PROPOSAL NOTE 3: **"Pre-Owned/Reconditioned/Retired Rental"** shall be defined as equipment having been checked and inspected by a manufacturer-authorized dealer prior to sale and shall be no older than sixty (60) months as of the date of delivery. Proposers responding to this Proposal Invitation for **"Pre-Owned/Reconditioned/Retired Rental"** equipment must also be approved by the manufacturer to sell pre-owned/reconditioned/retired rental equipment for the brand submitted and must submit an approval letter from each manufacturer with the Proposal. Manufacturer authorization letters must include the regions in which equipment can be sold. Equipment listed as **"Pre-Owned/Reconditioned/Retired Rental"** shall be in good and working condition and shall include a minimum warranty of one-hundred eighty (180) days against any defect from workmanship and parts and shall cover equipment repairs and/or component replacement. Total equipment usage hours as displayed on the service meter will have a maximum of one thousand (1,000) hours per year of age and a minimum of seventy-five percent (75%) of wear remaining for tires, track, and/or ground engagement tools.

Vendors proposing multiple manufacturer product lines and/or catalog/price list per line item must submit the information as follows or proposal may not be considered:

- Select **"Add Alternate"** for each additional manufacturer product line and/or catalog/price list proposed
- Vendor's must list one specific percentage discount for each manufacturer and/or catalog/price list listed

Item Attributes

1. State Name of Manufacturer Catalog or Product Price list Proposed with Discount Percentage

NOTE: Do not reference SKU, Reference Numbers, Websites, and/or "See Attached/Enclosed".

Case Dozer Price Book

Alternate 1

Section I: New Construction, Road, Bridge and Repair Equipment-PURCHASE ONLY

Discount (%) off catalog/price list for **Track-Type Tractors and Dozers, Accessories and Attachments.** Catalog/Price list MUST be included or proposal will not be considered. Asphalt Distributors, Accessories and Attachments.

Total: 25%

Item Attributes

1. State Name of Manufacturer Catalog or Product Price list Proposed with Discount Percentage

NOTE: Do not reference SKU, Reference Numbers, Websites, and/or "See Attached/Enclosed".

Case UT Dozer Price Book

37 **Section I: New Construction, Road, Bridge and Repair Equipment-PURCHASE ONLY**

Discount (%) off catalog/price list for **Tracked Excavators, Accessories and Attachments.** Catalog/Price list MUST be included or proposal will not be considered. Asphalt Distributors, Accessories and Attachments.

Total: 25%

Item Notes: **PROPOSAL NOTE 1:** Vendors shall submit catalog(s)/price list(s) with their Proposal response or the Proposal will not be considered. Vendors shall submit catalog(s)/price list(s) with the Proposal in a readily available and readable electronic format, with Excel or searchable PDF preferred. **No paper catalogs or manufacturer/vendor websites will be accepted.**

PROPOSAL NOTE 2: A Vendor proposing shall be approved and authorized by the manufacturer to sell, install, and service the brand(s) of product(s) proposed. Proposers responding to this Proposal Invitation shall submit an approval letter from each manufacturer for each product line proposed. The requirement to provide an approval letter from the manufacturer applies to both seller and installers. Manufacturers responding directly to this Proposal Invitation, in lieu of an authorization letter, shall submit a written explanation that the company is the manufacturer of the product line(s) proposed. Dealer authorization agreements will not be accepted as a substitute for the manufacturer authorization letter.

The manufacturer authorization letters must include the following:
1. Composed on manufacturer letterhead (an email message is not a substitute for the letter),
2. Addressed to "The Local Government Purchasing Cooperative",
3. Dated within the current calendar year,
4. List the regions in Texas and states that Vendor is authorized to sell, install, and service product(s) proposed, and
5. Name, Title, and Signature of Authorized Official from Manufacturer.

PROPOSAL NOTE 3: **"Pre-Owned/Reconditioned/Retired Rental"** shall be defined as equipment having been checked and inspected by a manufacturer-authorized dealer prior to sale and shall be no older than sixty (60) months as of the date of delivery. Proposers responding to this Proposal Invitation for **"Pre-Owned/Reconditioned/Retired Rental"** equipment must also be approved by the manufacturer to sell pre-owned/reconditioned/retired rental equipment for the brand submitted and must submit an approval letter from each manufacturer with the Proposal. Manufacturer authorization letters must include the regions in which equipment can be sold. Equipment listed as **"Pre-Owned/Reconditioned/Retired Rental"** shall be in good and working condition and shall include a minimum warranty of one-hundred eighty (180) days against any defect from workmanship and parts and shall cover equipment repairs and/or component replacement. Total equipment usage hours as displayed on the service meter will have a maximum of one thousand (1,000) hours per year of age and a minimum of seventy-five percent (75%) of wear remaining for tires, track, and/or ground engagement tools.

Vendors proposing multiple manufacturer product lines and/or catalog/price list per line item must submit the information as follows or proposal may not be considered:

- Select **"Add Alternate"** for each additional manufacturer product line and/or catalog/price list proposed
- Vendor's must list one specific percentage discount for each manufacturer and/or catalog/price list listed

Item Attributes

1. State Name of Manufacturer Catalog or Product Price list Proposed with Discount Percentage

NOTE: Do not reference SKU, Reference Numbers, Websites, and/or "See Attached/Enclosed".

Case Excavator Price Book

Alternate 1

Section I: New Construction, Road, Bridge and Repair Equipment-PURCHASE ONLY
Discount (%) off catalog/price list for **Tracked Excavators, Accessories and Attachments.** Catalog/Price list MUST be included or proposal will not be considered. Asphalt Distributors, Accessories and Attachments.

Total: 25%

Item Attributes

1. State Name of Manufacturer Catalog or Product Price list Proposed with Discount Percentage

NOTE: Do not reference SKU, Reference Numbers, Websites, and/or "See Attached/Enclosed".

Case Midi Excavator Price Book

Alternate 2

Section I: New Construction, Road, Bridge and Repair Equipment-PURCHASE ONLY
Discount (%) off catalog/price list for **Tracked Excavators, Accessories and Attachments.** Catalog/Price list MUST be included or proposal will not be considered. Asphalt Distributors, Accessories and Attachments.

Total: 25%

Item Attributes

1. State Name of Manufacturer Catalog or Product Price list Proposed with Discount Percentage

NOTE: Do not reference SKU, Reference Numbers, Websites, and/or "See Attached/Enclosed".

Case Mini Excavator Price Book

Alternate 3

Section I: New Construction, Road, Bridge and Repair Equipment-PURCHASE ONLY
Discount (%) off catalog/price list for **Tracked Excavators, Accessories and Attachments.** Catalog/Price list MUST be included or proposal will not be considered. Asphalt Distributors, Accessories and Attachments.

Total: 35%

Item Attributes

1. State Name of Manufacturer Catalog or Product Price list Proposed with Discount Percentage

NOTE: Do not reference SKU, Reference Numbers, Websites, and/or "See Attached/Enclosed".

Hyundai Price List

Alternate 4

Section I: New Construction, Road, Bridge and Repair Equipment-PURCHASE ONLY
Discount (%) off catalog/price list for **Tracked Excavators, Accessories and Attachments.** Catalog/Price list MUST be included or proposal will not be considered. Asphalt Distributors, Accessories and Attachments.

Total: 20%

Item Attributes

1. State Name of Manufacturer Catalog or Product Price list Proposed with Discount Percentage

NOTE: Do not reference SKU, Reference Numbers, Websites, and/or "See Attached/Enclosed".

Linkbelt Price List

Alternate 5

Section I: New Construction, Road, Bridge and Repair Equipment-PURCHASE ONLY

Discount (%) off catalog/price list for **Tracked Excavators, Accessories and Attachments.** Catalog/Price list MUST be included or proposal will not be considered. Asphalt Distributors, Accessories and Attachments.

Total: 10%

Item Attributes

1. State Name of Manufacturer Catalog or Product Price list Proposed with Discount Percentage

NOTE: Do not reference SKU, Reference Numbers, Websites, and/or "See Attached/Enclosed".

Takeuchi Price Book

38 **Section I: New Construction, Road, Bridge and Repair Equipment-PURCHASE ONLY**

Discount (%) off catalog/price list for **Trommel Screen Equipment and Compost Turners, Accessories and Attachments.** Catalog/Price list MUST be included or proposal will not be considered. Asphalt Distributors, Accessories and Attachments.

No Bid

Item Notes: **PROPOSAL NOTE 1:** Vendors shall submit catalog(s)/price list(s) with their Proposal response or the Proposal will not be considered. Vendors shall submit catalog(s)/price list(s) with the Proposal in a readily available and readable electronic format, with Excel or searchable PDF preferred. **No paper catalogs or manufacturer/vendor websites will be accepted.**

PROPOSAL NOTE 2: A Vendor proposing shall be approved and authorized by the manufacturer to sell, install, and service the brand(s) of product(s) proposed. Proposers responding to this Proposal Invitation shall submit an approval letter from each manufacturer for each product line proposed. The requirement to provide an approval letter from the manufacturer applies to both seller and installers. Manufacturers responding directly to this Proposal Invitation, in lieu of an authorization letter, shall submit a written explanation that the company is the manufacturer of the product line(s) proposed. Dealer authorization agreements will not be accepted as a substitute for the manufacturer authorization letter.

The manufacturer authorization letters must include the following:
1. Composed on manufacturer letterhead (an email message is not a substitute for the letter),
2. Addressed to "The Local Government Purchasing Cooperative",
3. Dated within the current calendar year,
4. List the regions in Texas and states that Vendor is authorized to sell, install, and service product(s) proposed, and
5. Name, Title, and Signature of Authorized Official from Manufacturer.

PROPOSAL NOTE 3: **"Pre-Owned/Reconditioned/Retired Rental"** shall be defined as equipment having been checked and inspected by a manufacturer-authorized dealer prior to sale and shall be no older than sixty (60) months as of the date of delivery. Proposers responding to this Proposal Invitation for **"Pre-Owned/Reconditioned/Retired Rental"** equipment must also be approved by the manufacturer to sell pre-owned/reconditioned/retired rental equipment for the brand submitted and must submit an approval letter from each manufacturer with the Proposal. Manufacturer authorization letters must include the regions in which equipment can be sold. Equipment listed as **"Pre-Owned/Reconditioned/Retired Rental"** shall be in good and working condition and shall include a minimum warranty of one-hundred eighty (180) days against any defect from workmanship and parts and shall cover equipment repairs and/or component replacement. Total equipment usage hours as displayed on the service meter will have a maximum of one thousand (1,000) hours per year of age and a minimum of seventy-five percent (75%) of wear remaining for tires, track, and/or ground engagement tools.

Vendors proposing multiple manufacturer product lines and/or catalog/price list per line item must submit the information as follows or proposal may not be considered:

- Select **"Add Alternate"** for each additional manufacturer product line and/or catalog/price list proposed
- Vendor's must list one specific percentage discount for each manufacturer and/or catalog/price list listed

Item Attributes

1. State Name of Manufacturer Catalog or Product Price list Proposed with Discount Percentage

NOTE: Do not reference SKU, Reference Numbers, Websites, and/or "See Attached/Enclosed".

No response

39

Section I: New Construction, Road, Bridge and Repair Equipment-PURCHASE ONLY

Discount (%) off catalog/price list for **Truck Mounted Excavators, Accessories and Attachments**. Catalog/Price list MUST be included or proposal will not be considered. Asphalt Distributors, Accessories and Attachments.

No Bid

Item Notes: **PROPOSAL NOTE 1:** Vendors shall submit catalog(s)/price list(s) with their Proposal response or the Proposal will not be considered. Vendors shall submit catalog(s)/price list(s) with the Proposal in a readily available and readable electronic format, with Excel or searchable PDF preferred. **No paper catalogs or manufacturer/vendor websites will be accepted.**

PROPOSAL NOTE 2: A Vendor proposing shall be approved and authorized by the manufacturer to sell, install, and service the brand(s) of product(s) proposed. Proposers responding to this Proposal Invitation shall submit an approval letter from each manufacturer for each product line proposed. The requirement to provide an approval letter from the manufacturer applies to both seller and installers. Manufacturers responding directly to this Proposal Invitation, in lieu of an authorization letter, shall submit a written explanation that the company is the manufacturer of the product line(s) proposed. Dealer authorization agreements will not be accepted as a substitute for the manufacturer authorization letter.

The manufacturer authorization letters must include the following:
1. Composed on manufacturer letterhead (an email message is not a substitute for the letter),
2. Addressed to "The Local Government Purchasing Cooperative",
3. Dated within the current calendar year,
4. List the regions in Texas and states that Vendor is authorized to sell, install, and service product(s) proposed, and
5. Name, Title, and Signature of Authorized Official from Manufacturer.

PROPOSAL NOTE 3: **"Pre-Owned/Reconditioned/Retired Rental"** shall be defined as equipment having been checked and inspected by a manufacturer-authorized dealer prior to sale and shall be no older than sixty (60) months as of the date of delivery. Proposers responding to this Proposal Invitation for **"Pre-Owned/Reconditioned/Retired Rental"** equipment must also be approved by the manufacturer to sell pre-owned/reconditioned/retired rental equipment for the brand submitted and must submit an approval letter from each manufacturer with the Proposal. Manufacturer authorization letters must include the regions in which equipment can be sold. Equipment listed as **"Pre-Owned/Reconditioned/Retired Rental"** shall be in good and working condition and shall include a minimum warranty of one-hundred eighty (180) days against any defect from workmanship and parts and shall cover equipment repairs and/or component replacement. Total equipment usage hours as displayed on the service meter will have a maximum of one thousand (1,000) hours per year of age and a minimum of seventy-five percent (75%) of wear remaining for tires, track, and/or ground engagement tools.

Vendors proposing multiple manufacturer product lines and/or catalog/price list per line item must submit the information as follows or proposal may not be considered:

- Select **"Add Alternate"** for each additional manufacturer product line and/or catalog/price list proposed
- Vendor's must list one specific percentage discount for each manufacturer and/or catalog/price list listed

Item Attributes

1. State Name of Manufacturer Catalog or Product Price list Proposed with Discount Percentage

NOTE: Do not reference SKU, Reference Numbers, Websites, and/or "See Attached/Enclosed".

No response

40

Section I: New Construction, Road, Bridge and Repair Equipment-PURCHASE ONLY

Discount (%) off catalog/price list for **All Types of Truck Mounted Aerial Lifts, Accessories and Attachments** (telescopic, cable handler, digger/hydraulic derrick, and related aerial lifts). Catalog/Price list MUST be included or proposal will not be considered. Asphalt Distributors, Accessories and Attachments.

No Bid

Item Notes: **PROPOSAL NOTE 1:** Vendors shall submit catalog(s)/price list(s) with their Proposal response or the Proposal will not be considered. Vendors shall submit catalog(s)/price list(s) with the Proposal in a readily available and readable electronic format, with Excel or searchable PDF preferred. **No paper catalogs or manufacturer/vendor websites will be accepted.**

PROPOSAL NOTE 2: A Vendor proposing shall be approved and authorized by the manufacturer to sell, install, and service the brand(s) of product(s) proposed. Proposers responding to this Proposal Invitation shall submit an approval letter from each manufacturer for each product line proposed. The requirement to provide an approval letter from the manufacturer applies to both seller and installers. Manufacturers responding directly to this Proposal Invitation, in lieu of an authorization letter, shall submit a written explanation that the company is the manufacturer of the product line(s) proposed. Dealer authorization agreements will not be accepted as a substitute for the manufacturer authorization letter.

The manufacturer authorization letters must include the following:
1. Composed on manufacturer letterhead (an email message is not a substitute for the letter),
2. Addressed to "The Local Government Purchasing Cooperative",
3. Dated within the current calendar year,
4. List the regions in Texas and states that Vendor is authorized to sell, install, and service product(s) proposed, and
5. Name, Title, and Signature of Authorized Official from Manufacturer.

PROPOSAL NOTE 3: **"Pre-Owned/Reconditioned/Retired Rental"** shall be defined as equipment having been checked and inspected by a manufacturer-authorized dealer prior to sale and shall be no older than sixty (60) months as of the date of delivery. Proposers responding to this Proposal Invitation for **"Pre-Owned/Reconditioned/Retired Rental"** equipment must also be approved by the manufacturer to sell pre-owned/reconditioned/retired rental equipment for the brand submitted and must submit an approval letter from each manufacturer with the Proposal. Manufacturer authorization letters must include the regions in which equipment can be sold. Equipment listed as **"Pre-Owned/Reconditioned/Retired Rental"** shall be in good and working condition and shall include a minimum warranty of one-hundred eighty (180) days against any defect from workmanship and parts and shall cover equipment repairs and/or component replacement. Total equipment usage hours as displayed on the service meter will have a maximum of one thousand (1,000) hours per year of age and a minimum of seventy-five percent (75%) of wear remaining for tires, track, and/or ground engagement tools.

Vendors proposing multiple manufacturer product lines and/or catalog/price list per line item must submit the information as follows or proposal may not be considered:

- Select **"Add Alternate"** for each additional manufacturer product line and/or catalog/price list proposed
- Vendor's must list one specific percentage discount for each manufacturer and/or catalog/price list listed

Item Attributes

1. State Name of Manufacturer Catalog or Product Price list Proposed with Discount Percentage

NOTE: Do not reference SKU, Reference Numbers, Websites, and/or "See Attached/Enclosed".

No response

41

Section I: New Construction, Road, Bridge and Repair Equipment-PURCHASE ONLY

Discount (%) off catalog/price list for **Utility Vehicles, Accessories and Attachments**. Catalog/Price list MUST be included or proposal will not be considered. Asphalt Distributors, Accessories and Attachments.

No Bid

Item Notes: **PROPOSAL NOTE 1:** Vendors shall submit catalog(s)/price list(s) with their Proposal response or the Proposal will not be considered. Vendors shall submit catalog(s)/price list(s) with the Proposal in a readily available and readable electronic format, with Excel or searchable PDF preferred. **No paper catalogs or manufacturer/vendor websites will be accepted.**

PROPOSAL NOTE 2: A Vendor proposing shall be approved and authorized by the manufacturer to sell, install, and service the brand(s) of product(s) proposed. Proposers responding to this Proposal Invitation shall submit an approval letter from each manufacturer for each product line proposed. The requirement to provide an approval letter from the manufacturer applies to both seller and installers. Manufacturers responding directly to this Proposal Invitation, in lieu of an authorization letter, shall submit a written explanation that the company is the manufacturer of the product line(s) proposed. Dealer authorization agreements will not be accepted as a substitute for the manufacturer authorization letter.

The manufacturer authorization letters must include the following:
1. Composed on manufacturer letterhead (an email message is not a substitute for the letter),
2. Addressed to "The Local Government Purchasing Cooperative",
3. Dated within the current calendar year,
4. List the regions in Texas and states that Vendor is authorized to sell, install, and service product(s) proposed, and
5. Name, Title, and Signature of Authorized Official from Manufacturer.

PROPOSAL NOTE 3: **"Pre-Owned/Reconditioned/Retired Rental"** shall be defined as equipment having been checked and inspected by a manufacturer-authorized dealer prior to sale and shall be no older than sixty (60) months as of the date of delivery. Proposers responding to this Proposal Invitation for **"Pre-Owned/Reconditioned/Retired Rental"** equipment must also be approved by the manufacturer to sell pre-owned/reconditioned/retired rental equipment for the brand submitted and must submit an approval letter from each manufacturer with the Proposal. Manufacturer authorization letters must include the regions in which equipment can be sold. Equipment listed as **"Pre-Owned/Reconditioned/Retired Rental"** shall be in good and working condition and shall include a minimum warranty of one-hundred eighty (180) days against any defect from workmanship and parts and shall cover equipment repairs and/or component replacement. Total equipment usage hours as displayed on the service meter will have a maximum of one thousand (1,000) hours per year of age and a minimum of seventy-five percent (75%) of wear remaining for tires, track, and/or ground engagement tools.

Vendors proposing multiple manufacturer product lines and/or catalog/price list per line item must submit the information as follows or proposal may not be considered:

- Select **"Add Alternate"** for each additional manufacturer product line and/or catalog/price list proposed
- Vendor's must list one specific percentage discount for each manufacturer and/or catalog/price list listed

Item Attributes

1. State Name of Manufacturer Catalog or Product Price list Proposed with Discount Percentage

NOTE: Do not reference SKU, Reference Numbers, Websites, and/or "See Attached/Enclosed".

No response

42

Section I: New Construction, Road, Bridge and Repair Equipment-PURCHASE ONLY

Discount (%) off catalog/price list for **Vibratory Soil Compactors and Rollers, Accessories and Attachments.** Catalog/Price list MUST be included or proposal will not be considered. Asphalt Distributors, Accessories and Attachments.

Total: 25%

Item Notes: **PROPOSAL NOTE 1:** Vendors shall submit catalog(s)/price list(s) with their Proposal response or the Proposal will not be considered. Vendors shall submit catalog(s)/price list(s) with the Proposal in a readily available and readable electronic format, with Excel or searchable PDF preferred. **No paper catalogs or manufacturer/vendor websites will be accepted.**

PROPOSAL NOTE 2: A Vendor proposing shall be approved and authorized by the manufacturer to sell, install, and service the brand(s) of product(s) proposed. Proposers responding to this Proposal Invitation shall submit an approval letter from each manufacturer for each product line proposed. The requirement to provide an approval letter from the manufacturer applies to both seller and installers. Manufacturers responding directly to this Proposal Invitation, in lieu of an authorization letter, shall submit a written explanation that the company is the manufacturer of the product line(s) proposed. Dealer authorization agreements will not be accepted as a substitute for the manufacturer authorization letter.

The manufacturer authorization letters must include the following:

1. Composed on manufacturer letterhead (an email message is not a substitute for the letter),
2. Addressed to "The Local Government Purchasing Cooperative",
3. Dated within the current calendar year,
4. List the regions in Texas and states that Vendor is authorized to sell, install, and service product(s) proposed, and
5. Name, Title, and Signature of Authorized Official from Manufacturer.

PROPOSAL NOTE 3: **"Pre-Owned/Reconditioned/Retired Rental"** shall be defined as equipment having been checked and inspected by a manufacturer-authorized dealer prior to sale and shall be no older than sixty (60) months as of the date of delivery. Proposers responding to this Proposal Invitation for **"Pre-Owned/Reconditioned/Retired Rental"** equipment must also be approved by the manufacturer to sell pre-owned/reconditioned/retired rental equipment for the brand submitted and must submit an approval letter from each manufacturer with the Proposal. Manufacturer authorization letters must include the regions in which equipment can be sold. Equipment listed as **"Pre-Owned/Reconditioned/Retired Rental"** shall be in good and working condition and shall include a minimum warranty of one-hundred eighty (180) days against any defect from workmanship and parts and shall cover equipment repairs and/or component replacement. Total equipment usage hours as displayed on the service meter will have a maximum of one thousand (1,000) hours per year of age and a minimum of seventy-five percent (75%) of wear remaining for tires, track, and/or ground engagement tools.

Vendors proposing multiple manufacturer product lines and/or catalog/price list per line item must submit the information as follows or proposal may not be considered:

- Select **"Add Alternate"** for each additional manufacturer product line and/or catalog/price list proposed
- Vendor's must list one specific percentage discount for each manufacturer and/or catalog/price list listed

Item Attributes

1. State Name of Manufacturer Catalog or Product Price list Proposed with Discount Percentage

NOTE: Do not reference SKU, Reference Numbers, Websites, and/or "See Attached/Enclosed".

Case Construction Price Book

43

Section I: New Construction, Road, Bridge and Repair Equipment-PURCHASE ONLY

Discount (%) off catalog/price list for **Waste Handling Wheel Loaders and Landfill Compactors, Accessories and Attachments.** Catalog/Price list MUST be included or proposal will not be considered. Asphalt Distributors, Accessories and Attachments.

No Bid

Item Notes: **PROPOSAL NOTE 1:** Vendors shall submit catalog(s)/price list(s) with their Proposal response or the Proposal will not be considered. Vendors shall submit catalog(s)/price list(s) with the Proposal in a readily available and readable electronic format, with Excel or searchable PDF preferred. **No paper catalogs or manufacturer/vendor websites will be accepted.**

PROPOSAL NOTE 2: A Vendor proposing shall be approved and authorized by the manufacturer to sell, install, and service the brand(s) of product(s) proposed. Proposers responding to this Proposal Invitation shall submit an approval letter from each manufacturer for each product line proposed. The requirement to provide an approval letter from the manufacturer applies to both seller and installers. Manufacturers responding directly to this Proposal Invitation, in lieu of an authorization letter, shall submit a written explanation that the company is the manufacturer of the product line(s) proposed. Dealer authorization agreements will not be accepted as a substitute for the manufacturer authorization letter.

The manufacturer authorization letters must include the following:
1. Composed on manufacturer letterhead (an email message is not a substitute for the letter),
2. Addressed to "The Local Government Purchasing Cooperative",
3. Dated within the current calendar year,
4. List the regions in Texas and states that Vendor is authorized to sell, install, and service product(s) proposed, and
5. Name, Title, and Signature of Authorized Official from Manufacturer.

PROPOSAL NOTE 3: **"Pre-Owned/Reconditioned/Retired Rental"** shall be defined as equipment having been checked and inspected by a manufacturer-authorized dealer prior to sale and shall be no older than sixty (60) months as of the date of delivery. Proposers responding to this Proposal Invitation for **"Pre-Owned/Reconditioned/Retired Rental"** equipment must also be approved by the manufacturer to sell pre-owned/reconditioned/retired rental equipment for the brand submitted and must submit an approval letter from each manufacturer with the Proposal. Manufacturer authorization letters must include the regions in which equipment can be sold. Equipment listed as **"Pre-Owned/Reconditioned/Retired Rental"** shall be in good and working condition and shall include a minimum warranty of one-hundred eighty (180) days against any defect from workmanship and parts and shall cover equipment repairs and/or component replacement. Total equipment usage hours as displayed on the service meter will have a maximum of one thousand (1,000) hours per year of age and a minimum of seventy-five percent (75%) of wear remaining for tires, track, and/or ground engagement tools.

Vendors proposing multiple manufacturer product lines and/or catalog/price list per line item must submit the information as follows or proposal may not be considered:

- Select **"Add Alternate"** for each additional manufacturer product line and/or catalog/price list proposed
- Vendor's must list one specific percentage discount for each manufacturer and/or catalog/price list listed

Item Attributes

1. State Name of Manufacturer Catalog or Product Price list Proposed with Discount Percentage

NOTE: Do not reference SKU, Reference Numbers, Websites, and/or "See Attached/Enclosed".

No response

44 **Section I: New Construction, Road, Bridge and Repair Equipment-PURCHASE ONLY**

Discount (%) off catalog/price list for **Wheel Dozers, Accessories and Attachments.** Catalog/Price list MUST be included or proposal will not be considered. Asphalt Distributors, Accessories and Attachments.

No Bid

Item Notes: **PROPOSAL NOTE 1:** Vendors shall submit catalog(s)/price list(s) with their Proposal response or the Proposal will not be considered. Vendors shall submit catalog(s)/price list(s) with the Proposal in a readily available and readable electronic format, with Excel or searchable PDF preferred. **No paper catalogs or manufacturer/vendor websites will be accepted.**

PROPOSAL NOTE 2: A Vendor proposing shall be approved and authorized by the manufacturer to sell, install, and service the brand(s) of product(s) proposed. Proposers responding to this Proposal Invitation shall submit an approval letter from each manufacturer for each product line proposed. The requirement to provide an approval letter from the manufacturer applies to both seller and installers. Manufacturers responding directly to this Proposal Invitation, in lieu of an authorization letter, shall submit a written explanation that the company is the manufacturer of the product line(s) proposed. Dealer authorization agreements will not be accepted as a substitute for the manufacturer authorization letter.

The manufacturer authorization letters must include the following:
1. Composed on manufacturer letterhead (an email message is not a substitute for the letter),
2. Addressed to "The Local Government Purchasing Cooperative",
3. Dated within the current calendar year,
4. List the regions in Texas and states that Vendor is authorized to sell, install, and service product(s) proposed, and
5. Name, Title, and Signature of Authorized Official from Manufacturer.

PROPOSAL NOTE 3: **"Pre-Owned/Reconditioned/Retired Rental"** shall be defined as equipment having been checked and inspected by a manufacturer-authorized dealer prior to sale and shall be no older than sixty (60) months as of the date of delivery. Proposers responding to this Proposal Invitation for **"Pre-Owned/Reconditioned/Retired Rental"** equipment must also be approved by the manufacturer to sell pre-owned/reconditioned/retired rental equipment for the brand submitted and must submit an approval letter from each manufacturer with the Proposal. Manufacturer authorization letters must include the regions in which equipment can be sold. Equipment listed as **"Pre-Owned/Reconditioned/Retired Rental"** shall be in good and working condition and shall include a minimum warranty of one-hundred eighty (180) days against any defect from workmanship and parts and shall cover equipment repairs and/or component replacement. Total equipment usage hours as displayed on the service meter will have a maximum of one thousand (1,000) hours per year of age and a minimum of seventy-five percent (75%) of wear remaining for tires, track, and/or ground engagement tools.

Vendors proposing multiple manufacturer product lines and/or catalog/price list per line item must submit the information as follows or proposal may not be considered:

- Select **"Add Alternate"** for each additional manufacturer product line and/or catalog/price list proposed
- Vendor's must list one specific percentage discount for each manufacturer and/or catalog/price list listed

Item Attributes

1. State Name of Manufacturer Catalog or Product Price list Proposed with Discount Percentage

NOTE: Do not reference SKU, Reference Numbers, Websites, and/or "See Attached/Enclosed".

No response

45

Section I: New Construction, Road, Bridge and Repair Equipment-PURCHASE ONLY

Discount (%) off catalog/price list for **Wheel Excavators, Accessories and Attachments.** Catalog/Price list MUST be included or proposal will not be considered. Asphalt Distributors, Accessories and Attachments.

Total: 35%

Item Notes: **PROPOSAL NOTE 1:** Vendors shall submit catalog(s)/price list(s) with their Proposal response or the Proposal will not be considered. Vendors shall submit catalog(s)/price list(s) with the Proposal in a readily available and readable electronic format, with Excel or searchable PDF preferred. **No paper catalogs or manufacturer/vendor websites will be accepted.**

PROPOSAL NOTE 2: A Vendor proposing shall be approved and authorized by the manufacturer to sell, install, and service the brand(s) of product(s) proposed. Proposers responding to this Proposal Invitation shall submit an approval letter from each manufacturer for each product line proposed. The requirement to provide an approval letter from the manufacturer applies to both seller and installers. Manufacturers responding directly to this Proposal Invitation, in lieu of an authorization letter, shall submit a written explanation that the company is the manufacturer of the product line(s) proposed. Dealer authorization agreements will not be accepted as a substitute for the manufacturer authorization letter.

The manufacturer authorization letters must include the following:
1. Composed on manufacturer letterhead (an email message is not a substitute for the letter),
2. Addressed to "The Local Government Purchasing Cooperative",
3. Dated within the current calendar year,
4. List the regions in Texas and states that Vendor is authorized to sell, install, and service product(s) proposed, and
5. Name, Title, and Signature of Authorized Official from Manufacturer.

PROPOSAL NOTE 3: **"Pre-Owned/Reconditioned/Retired Rental"** shall be defined as equipment having been checked and inspected by a manufacturer-authorized dealer prior to sale and shall be no older than sixty (60) months as of the date of delivery. Proposers responding to this Proposal Invitation for **"Pre-Owned/Reconditioned/Retired Rental"** equipment must also be approved by the manufacturer to sell pre-owned/reconditioned/retired rental equipment for the brand submitted and must submit an approval letter from each manufacturer with the Proposal. Manufacturer authorization letters must include the regions in which equipment can be sold. Equipment listed as **"Pre-Owned/Reconditioned/Retired Rental"** shall be in good and working condition and shall include a minimum warranty of one-hundred eighty (180) days against any defect from workmanship and parts and shall cover equipment repairs and/or component replacement. Total equipment usage hours as displayed on the service meter will have a maximum of one thousand (1,000) hours per year of age and a minimum of seventy-five percent (75%) of wear remaining for tires, track, and/or ground engagement tools.

Vendors proposing multiple manufacturer product lines and/or catalog/price list per line item must submit the information as follows or proposal may not be considered:

- Select **"Add Alternate"** for each additional manufacturer product line and/or catalog/price list proposed
- Vendor's must list one specific percentage discount for each manufacturer and/or catalog/price list listed

Item Attributes

1. State Name of Manufacturer Catalog or Product Price list Proposed with Discount Percentage

NOTE: Do not reference SKU, Reference Numbers, Websites, and/or "See Attached/Enclosed".

Hyundai Price List

46 **Section I: New Construction, Road, Bridge and Repair Equipment-PURCHASE ONLY**

Discount (%) off catalog/price list for **Wheel Loaders, Accessories and Attachments.** Catalog/Price list MUST be included or proposal will not be considered. Asphalt Distributors, Accessories and Attachments.

Total: 25%

Item Notes: **PROPOSAL NOTE 1:** Vendors shall submit catalog(s)/price list(s) with their Proposal response or the Proposal will not be considered. Vendors shall submit catalog(s)/price list(s) with the Proposal in a readily available and readable electronic format, with Excel or searchable PDF preferred. **No paper catalogs or manufacturer/vendor websites will be accepted.**

PROPOSAL NOTE 2: A Vendor proposing shall be approved and authorized by the manufacturer to sell, install, and service the brand(s) of product(s) proposed. Proposers responding to this Proposal Invitation shall submit an approval letter from each manufacturer for each product line proposed. The requirement to provide an approval letter from the manufacturer applies to both seller and installers. Manufacturers responding directly to this Proposal Invitation, in lieu of an authorization letter, shall submit a written explanation that the company is the manufacturer of the product line(s) proposed. Dealer authorization agreements will not be accepted as a substitute for the manufacturer authorization letter.

The manufacturer authorization letters must include the following:
1. Composed on manufacturer letterhead (an email message is not a substitute for the letter),
2. Addressed to "The Local Government Purchasing Cooperative",
3. Dated within the current calendar year,
4. List the regions in Texas and states that Vendor is authorized to sell, install, and service product(s) proposed, and
5. Name, Title, and Signature of Authorized Official from Manufacturer.

PROPOSAL NOTE 3: **"Pre-Owned/Reconditioned/Retired Rental"** shall be defined as equipment having been checked and inspected by a manufacturer-authorized dealer prior to sale and shall be no older than sixty (60) months as of the date of delivery. Proposers responding to this Proposal Invitation for **"Pre-Owned/Reconditioned/Retired Rental"** equipment must also be approved by the manufacturer to sell pre-owned/reconditioned/retired rental equipment for the brand submitted and must submit an approval letter from each manufacturer with the Proposal. Manufacturer authorization letters must include the regions in which equipment can be sold. Equipment listed as **"Pre-Owned/Reconditioned/Retired Rental"** shall be in good and working condition and shall include a minimum warranty of one-hundred eighty (180) days against any defect from workmanship and parts and shall cover equipment repairs and/or component replacement. Total equipment usage hours as displayed on the service meter will have a maximum of one thousand (1,000) hours per year of age and a minimum of seventy-five percent (75%) of wear remaining for tires, track, and/or ground engagement tools.

Vendors proposing multiple manufacturer product lines and/or catalog/price list per line item must submit the information as follows or proposal may not be considered:

- Select **"Add Alternate"** for each additional manufacturer product line and/or catalog/price list proposed
- Vendor's must list one specific percentage discount for each manufacturer and/or catalog/price list listed

Item Attributes

1. State Name of Manufacturer Catalog or Product Price list Proposed with Discount Percentage

NOTE: Do not reference SKU, Reference Numbers, Websites, and/or "See Attached/Enclosed".

Case Wheel Loader Price Book

Alternate 1

Section I: New Construction, Road, Bridge and Repair Equipment-PURCHASE ONLY
Discount (%) off catalog/price list for **Wheel Loaders, Accessories and Attachments.** Catalog/Price list MUST be included or proposal will not be considered. Asphalt Distributors, Accessories and Attachments.

Total: 25%

Item Attributes

1. State Name of Manufacturer Catalog or Product Price list Proposed with Discount Percentage

NOTE: Do not reference SKU, Reference Numbers, Websites, and/or "See Attached/Enclosed".

Case Compact WL Price Book

Alternate 2

Section I: New Construction, Road, Bridge and Repair Equipment-PURCHASE ONLY
Discount (%) off catalog/price list for **Wheel Loaders, Accessories and Attachments.** Catalog/Price list MUST be included or proposal will not be considered. Asphalt Distributors, Accessories and Attachments.

Total: 35%

Item Attributes

1. State Name of Manufacturer Catalog or Product Price list Proposed with Discount Percentage

NOTE: Do not reference SKU, Reference Numbers, Websites, and/or "See Attached/Enclosed".

Hyundai Price List

Alternate 3

Section I: New Construction, Road, Bridge and Repair Equipment-PURCHASE ONLY
Discount (%) off catalog/price list for **Wheel Loaders, Accessories and Attachments.** Catalog/Price list MUST be included or proposal will not be considered. Asphalt Distributors, Accessories and Attachments.

Total: 10%

Item Attributes

1. State Name of Manufacturer Catalog or Product Price list Proposed with Discount Percentage

NOTE: Do not reference SKU, Reference Numbers, Websites, and/or "See Attached/Enclosed".

Takeuchi Price Book

47

Section I: New Construction, Road, Bridge and Repair Equipment-PURCHASE ONLY

Discount (%) off catalog/price list for **Heavy Duty Paint Striping Equipment, Accessories and Attachments.** Catalog/Price list MUST be included or proposal will not be considered. Asphalt Distributors, Accessories and Attachments.

No Bid

Item Notes: **PROPOSAL NOTE 1:** Vendors shall submit catalog(s)/price list(s) with their Proposal response or the Proposal will not be considered. Vendors shall submit catalog(s)/price list(s) with the Proposal in a readily available and readable electronic format, with Excel or searchable PDF preferred. **No paper catalogs or manufacturer/vendor websites will be accepted.**

PROPOSAL NOTE 2: A Vendor proposing shall be approved and authorized by the manufacturer to sell, install, and service the brand(s) of product(s) proposed. Proposers responding to this Proposal Invitation shall submit an approval letter from each manufacturer for each product line proposed. The requirement to provide an approval letter from the manufacturer applies to both seller and installers. Manufacturers responding directly to this Proposal Invitation, in lieu of an authorization letter, shall submit a written explanation that the company is the manufacturer of the product line(s) proposed. Dealer authorization agreements will not be accepted as a substitute for the manufacturer authorization letter.

The manufacturer authorization letters must include the following:
1. Composed on manufacturer letterhead (an email message is not a substitute for the letter),
2. Addressed to "The Local Government Purchasing Cooperative",
3. Dated within the current calendar year,
4. List the regions in Texas and states that Vendor is authorized to sell, install, and service product(s) proposed, and
5. Name, Title, and Signature of Authorized Official from Manufacturer.

PROPOSAL NOTE 3: **"Pre-Owned/Reconditioned/Retired Rental"** shall be defined as equipment having been checked and inspected by a manufacturer-authorized dealer prior to sale and shall be no older than sixty (60) months as of the date of delivery. Proposers responding to this Proposal Invitation for **"Pre-Owned/Reconditioned/Retired Rental"** equipment must also be approved by the manufacturer to sell pre-owned/reconditioned/retired rental equipment for the brand submitted and must submit an approval letter from each manufacturer with the Proposal. Manufacturer authorization letters must include the regions in which equipment can be sold. Equipment listed as **"Pre-Owned/Reconditioned/Retired Rental"** shall be in good and working condition and shall include a minimum warranty of one-hundred eighty (180) days against any defect from workmanship and parts and shall cover equipment repairs and/or component replacement. Total equipment usage hours as displayed on the service meter will have a maximum of one thousand (1,000) hours per year of age and a minimum of seventy-five percent (75%) of wear remaining for tires, track, and/or ground engagement tools.

Vendors proposing multiple manufacturer product lines and/or catalog/price list per line item must submit the information as follows or proposal may not be considered:

- Select **"Add Alternate"** for each additional manufacturer product line and/or catalog/price list proposed
- Vendor's must list one specific percentage discount for each manufacturer and/or catalog/price list listed

Item Attributes

1. State Name of Manufacturer Catalog or Product Price list Proposed with Discount Percentage

NOTE: Do not reference SKU, Reference Numbers, Websites, and/or "See Attached/Enclosed".

No response

48 **Section I: New Construction, Road, Bridge and Repair Equipment-PURCHASE ONLY**

Discount (%) off catalog/price list for **All Other Construction, Road, Bridge, Other Equipment, Accessories and Attachments.** Catalog/Price list MUST be included or proposal will not be considered. Asphalt Distributors, Accessories and Attachments.

No Bid

Item Notes: **PROPOSAL NOTE 1:** Vendors shall submit catalog(s)/price list(s) with their Proposal response or the Proposal will not be considered. Vendors shall submit catalog(s)/price list(s) with the Proposal in a readily available and readable electronic format, with Excel or searchable PDF preferred. **No paper catalogs or manufacturer/vendor websites will be accepted.**

PROPOSAL NOTE 2: A Vendor proposing shall be approved and authorized by the manufacturer to sell, install, and service the brand(s) of product(s) proposed. Proposers responding to this Proposal Invitation shall submit an approval letter from each manufacturer for each product line proposed. The requirement to provide an approval letter from the manufacturer applies to both seller and installers. Manufacturers responding directly to this Proposal Invitation, in lieu of an authorization letter, shall submit a written explanation that the company is the manufacturer of the product line(s) proposed. Dealer authorization agreements will not be accepted as a substitute for the manufacturer authorization letter.

The manufacturer authorization letters must include the following:
1. Composed on manufacturer letterhead (an email message is not a substitute for the letter),
2. Addressed to "The Local Government Purchasing Cooperative",
3. Dated within the current calendar year,
4. List the regions in Texas and states that Vendor is authorized to sell, install, and service product(s) proposed, and
5. Name, Title, and Signature of Authorized Official from Manufacturer.

PROPOSAL NOTE 3: **"Pre-Owned/Reconditioned/Retired Rental"** shall be defined as equipment having been checked and inspected by a manufacturer-authorized dealer prior to sale and shall be no older than sixty (60) months as of the date of delivery. Proposers responding to this Proposal Invitation for **"Pre-Owned/Reconditioned/Retired Rental"** equipment must also be approved by the manufacturer to sell pre-owned/reconditioned/retired rental equipment for the brand submitted and must submit an approval letter from each manufacturer with the Proposal. Manufacturer authorization letters must include the regions in which equipment can be sold. Equipment listed as **"Pre-Owned/Reconditioned/Retired Rental"** shall be in good and working condition and shall include a minimum warranty of one-hundred eighty (180) days against any defect from workmanship and parts and shall cover equipment repairs and/or component replacement. Total equipment usage hours as displayed on the service meter will have a maximum of one thousand (1,000) hours per year of age and a minimum of seventy-five percent (75%) of wear remaining for tires, track, and/or ground engagement tools.

Vendors proposing multiple manufacturer product lines and/or catalog/price list per line item must submit the information as follows or proposal may not be considered:

- Select **"Add Alternate"** for each additional manufacturer product line and/or catalog/price list proposed
- Vendor's must list one specific percentage discount for each manufacturer and/or catalog/price list listed

Item Attributes

1. State Name of Manufacturer Catalog or Product Price list Proposed with Discount Percentage

NOTE: Do not reference SKU, Reference Numbers, Websites, and/or "See Attached/Enclosed".

No response

49 **Section I: New Construction, Road, Bridge and Repair Equipment-PURCHASE ONLY**

Discount (%) off catalog/price list for **Repair Parts on All Types of Construction, Road, Bridge, and Other Equipment.** Catalog/Price list MUST be included or proposal will not be considered. Asphalt Distributors, Accessories and Attachments.

No Bid

Item Notes: **PROPOSAL NOTE 1:** Vendors shall submit catalog(s)/price list(s) with their Proposal response or the Proposal will not be considered. Vendors shall submit catalog(s)/price list(s) with the Proposal in a readily available and readable electronic format, with Excel or searchable PDF preferred. **No paper catalogs or manufacturer/vendor websites will be accepted.**

PROPOSAL NOTE 2: A Vendor proposing shall be approved and authorized by the manufacturer to sell, install, and service the brand(s) of product(s) proposed. Proposers responding to this Proposal Invitation shall submit an approval letter from each manufacturer for each product line proposed. The requirement to provide an approval letter from the manufacturer applies to both seller and installers. Manufacturers responding directly to this Proposal Invitation, in lieu of an authorization letter, shall submit a written explanation that the company is the manufacturer of the product line(s) proposed. Dealer authorization agreements will not be accepted as a substitute for the manufacturer authorization letter.

The manufacturer authorization letters must include the following:
1. Composed on manufacturer letterhead (an email message is not a substitute for the letter),
2. Addressed to "The Local Government Purchasing Cooperative",
3. Dated within the current calendar year,
4. List the regions in Texas and states that Vendor is authorized to sell, install, and service product(s) proposed, and
5. Name, Title, and Signature of Authorized Official from Manufacturer.

PROPOSAL NOTE 3: **"Pre-Owned/Reconditioned/Retired Rental"** shall be defined as equipment having been checked and inspected by a manufacturer-authorized dealer prior to sale and shall be no older than sixty (60) months as of the date of delivery. Proposers responding to this Proposal Invitation for **"Pre-Owned/Reconditioned/Retired Rental"** equipment must also be approved by the manufacturer to sell pre-owned/reconditioned/retired rental equipment for the brand submitted and must submit an approval letter from each manufacturer with the Proposal. Manufacturer authorization letters must include the regions in which equipment can be sold. Equipment listed as **"Pre-Owned/Reconditioned/Retired Rental"** shall be in good and working condition and shall include a minimum warranty of one-hundred eighty (180) days against any defect from workmanship and parts and shall cover equipment repairs and/or component replacement. Total equipment usage hours as displayed on the service meter will have a maximum of one thousand (1,000) hours per year of age and a minimum of seventy-five percent (75%) of wear remaining for tires, track, and/or ground engagement tools.

Vendors proposing multiple manufacturer product lines and/or catalog/price list per line item must submit the information as follows or proposal may not be considered:

- Select **"Add Alternate"** for each additional manufacturer product line and/or catalog/price list proposed
- Vendor's must list one specific percentage discount for each manufacturer and/or catalog/price list listed

Item Attributes

1. State Name of Manufacturer Catalog or Product Price list Proposed with Discount Percentage

NOTE: Do not reference SKU, Reference Numbers, Websites, and/or "See Attached/Enclosed".

No response

50

Section II: Construction, Road, Bridge, and Repair Equipment-RENTAL ONLY (Rental Rate Sheet must be submitted with Proposal or Proposal will not be considered).
Discount (%) off catalog/price list for **RENTAL of All Construction, Road, Bridge, Other Equipment, Accessories and Attachments.** Catalog/Price list MUST be included or proposal will not be considered. Asphalt Distributors, Accessories and Attachments.

Total: 0%

Item Notes: **PROPOSAL NOTE 1:** Vendors shall submit catalog(s)/price list(s) with their Proposal response or the Proposal will not be considered. Vendors shall submit catalog(s)/price list(s) with the Proposal in a readily available and readable electronic format, with Excel or searchable PDF preferred. **No paper catalogs or manufacturer/vendor websites will be accepted.**

PROPOSAL NOTE 2: A Vendor proposing shall be approved and authorized by the manufacturer to sell, install, and service the brand(s) of product(s) proposed. Proposers responding to this Proposal Invitation shall submit an approval letter from each manufacturer for each product line proposed. The requirement to provide an approval letter from the manufacturer applies to both seller and installers. Manufacturers responding directly to this Proposal Invitation, in lieu of an authorization letter, shall submit a written explanation that the company is the manufacturer of the product line(s) proposed. Dealer authorization agreements will not be accepted as a substitute for the manufacturer authorization letter.

The manufacturer authorization letters must include the following:
1. Composed on manufacturer letterhead (an email message is not a substitute for the letter),
2. Addressed to "The Local Government Purchasing Cooperative",
3. Dated within the current calendar year,
4. List the regions in Texas and states that Vendor is authorized to sell, install, and service product(s) proposed, and
5. Name, Title, and Signature of Authorized Official from Manufacturer.

PROPOSAL NOTE 3: **"Pre-Owned/Reconditioned/Retired Rental"** shall be defined as equipment having been checked and inspected by a manufacturer-authorized dealer prior to sale and shall be no older than sixty (60) months as of the date of delivery. Proposers responding to this Proposal Invitation for **"Pre-Owned/Reconditioned/Retired Rental"** equipment must also be approved by the manufacturer to sell pre-owned/reconditioned/retired rental equipment for the brand submitted and must submit an approval letter from each manufacturer with the Proposal. Manufacturer authorization letters must include the regions in which equipment can be sold. Equipment listed as **"Pre-Owned/Reconditioned/Retired Rental"** shall be in good and working condition and shall include a minimum warranty of one-hundred eighty (180) days against any defect from workmanship and parts and shall cover equipment repairs and/or component replacement. Total equipment usage hours as displayed on the service meter will have a maximum of one thousand (1,000) hours per year of age and a minimum of seventy-five percent (75%) of wear remaining for tires, track, and/or ground engagement tools.

Vendors proposing multiple manufacturer product lines and/or catalog/price list per line item must submit the information as follows or proposal may not be considered:

- Select **"Add Alternate"** for each additional manufacturer product line and/or catalog/price list proposed
- Vendor's must list one specific percentage discount for each manufacturer and/or catalog/price list listed

Item Attributes

1. State Name of Manufacturer Catalog or Product Price list Proposed with Discount Percentage

NOTE: Do not reference SKU, Reference Numbers, Websites, and/or "See Attached/Enclosed".

NPE Rental Rate Pricelist

5 1

Section III: Construction, Road, Bridge, and Repair Equipment (Pre-Owned/Reconditioned/Retired Rental)- PURCHASE ONLY

Discount (%) off catalog/price list for **All Types of Pre-Owned/Reconditioned/Retired Rental Construction, Road, Bridge, Other Equipment, Accessories and Attachments.** Catalog/Price list MUST be included or proposal will not be considered. Asphalt Distributors, Accessories and Attachments.

Total: 10%

Item Notes: **PROPOSAL NOTE 1:** Vendors shall submit catalog(s)/price list(s) with their Proposal response or the Proposal will not be considered. Vendors shall submit catalog(s)/price list(s) with the Proposal in a readily available and readable electronic format, with Excel or searchable PDF preferred. **No paper catalogs or manufacturer/vendor websites will be accepted.**

PROPOSAL NOTE 2: A Vendor proposing shall be approved and authorized by the manufacturer to sell, install, and service the brand(s) of product(s) proposed. Proposers responding to this Proposal Invitation shall submit an approval letter from each manufacturer for each product line proposed. The requirement to provide an approval letter from the manufacturer applies to both seller and installers. Manufacturers responding directly to this Proposal Invitation, in lieu of an authorization letter, shall submit a written explanation that the company is the manufacturer of the product line(s) proposed. Dealer authorization agreements will not be accepted as a substitute for the manufacturer authorization letter.

The manufacturer authorization letters must include the following:
1. Composed on manufacturer letterhead (an email message is not a substitute for the letter),
2. Addressed to "The Local Government Purchasing Cooperative",
3. Dated within the current calendar year,
4. List the regions in Texas and states that Vendor is authorized to sell, install, and service product(s) proposed, and
5. Name, Title, and Signature of Authorized Official from Manufacturer.

PROPOSAL NOTE 3: **"Pre-Owned/Reconditioned/Retired Rental"** shall be defined as equipment having been checked and inspected by a manufacturer-authorized dealer prior to sale and shall be no older than sixty (60) months as of the date of delivery. Proposers responding to this Proposal Invitation for **"Pre-Owned/Reconditioned/Retired Rental"** equipment must also be approved by the manufacturer to sell pre-owned/reconditioned/retired rental equipment for the brand submitted and must submit an approval letter from each manufacturer with the Proposal. Manufacturer authorization letters must include the regions in which equipment can be sold. Equipment listed as **"Pre-Owned/Reconditioned/Retired Rental"** shall be in good and working condition and shall include a minimum warranty of one-hundred eighty (180) days against any defect from workmanship and parts and shall cover equipment repairs and/or component replacement. Total equipment usage hours as displayed on the service meter will have a maximum of one thousand (1,000) hours per year of age and a minimum of seventy-five percent (75%) of wear remaining for tires, track, and/or ground engagement tools.

Vendors proposing multiple manufacturer product lines and/or catalog/price list per line item must submit the information as follows or proposal may not be considered:

- Select **"Add Alternate"** for each additional manufacturer product line and/or catalog/price list proposed
- Vendor's must list one specific percentage discount for each manufacturer and/or catalog/price list listed

Item Attributes

1. State Name of Manufacturer Catalog or Product Price list Proposed with Discount Percentage

NOTE: Do not reference SKU, Reference Numbers, Websites, and/or "See Attached/Enclosed".

Broce Used Pricelist

Alternate 1

Section III: Construction, Road, Bridge, and Repair Equipment (Pre-Owned/Reconditioned/Retired Rental)- PURCHASE ONLY

Discount (%) off catalog/price list for **All Types of Pre-Owned/Reconditioned/Retired Rental Construction, Road, Bridge, Other Equipment, Accessories and Attachments.** Catalog/Price list MUST be included or proposal will not be considered. Asphalt Distributors, Accessories and Attachments.

Total: 10%

Item Attributes

1. State Name of Manufacturer Catalog or Product Price list Proposed with Discount Percentage

NOTE: Do not reference SKU, Reference Numbers, Websites, and/or "See Attached/Enclosed".

Case Used Pricelist

Alternate 2

Section III: Construction, Road, Bridge, and Repair Equipment (Pre-Owned/Reconditioned/Retired Rental)- PURCHASE ONLY

Discount (%) off catalog/price list for **All Types of Pre-Owned/Reconditioned/Retired Rental Construction, Road, Bridge, Other Equipment, Accessories and Attachments.** Catalog/Price list MUST be included or proposal will not be considered. Asphalt Distributors, Accessories and Attachments.

Total: 10%

Item Attributes

1. State Name of Manufacturer Catalog or Product Price list Proposed with Discount Percentage

NOTE: Do not reference SKU, Reference Numbers, Websites, and/or "See Attached/Enclosed".

Hamm Used Pricelist

Alternate 3

Section III: Construction, Road, Bridge, and Repair Equipment (Pre-Owned/Reconditioned/Retired Rental)- PURCHASE ONLY

Discount (%) off catalog/price list for **All Types of Pre-Owned/Reconditioned/Retired Rental Construction, Road, Bridge, Other Equipment, Accessories and Attachments.** Catalog/Price list MUST be included or proposal will not be considered. Asphalt Distributors, Accessories and Attachments.

Total: 10%

Item Attributes

1. State Name of Manufacturer Catalog or Product Price list Proposed with Discount Percentage

NOTE: Do not reference SKU, Reference Numbers, Websites, and/or "See Attached/Enclosed".

Hyundai Used Pricelist

Alternate 4

Section III: Construction, Road, Bridge, and Repair Equipment (Pre-Owned/Reconditioned/Retired Rental)- PURCHASE ONLY

Discount (%) off catalog/price list for **All Types of Pre-Owned/Reconditioned/Retired Rental Construction, Road, Bridge, Other Equipment, Accessories and Attachments.** Catalog/Price list MUST be included or proposal will not be considered. Asphalt Distributors, Accessories and Attachments.

Total: 10%

Item Attributes

1. State Name of Manufacturer Catalog or Product Price list Proposed with Discount Percentage

NOTE: Do not reference SKU, Reference Numbers, Websites, and/or "See Attached/Enclosed".

Liebherr Used Pricelist

Alternate 5

Section III: Construction, Road, Bridge, and Repair Equipment (Pre-Owned/Reconditioned/Retired Rental)- PURCHASE ONLY

Discount (%) off catalog/price list for **All Types of Pre-Owned/Reconditioned/Retired Rental Construction, Road, Bridge, Other Equipment, Accessories and Attachments.** Catalog/Price list MUST be included or proposal will not be considered. Asphalt Distributors, Accessories and Attachments.

Total: 10%

Item Attributes

1. State Name of Manufacturer Catalog or Product Price list Proposed with Discount Percentage

NOTE: Do not reference SKU, Reference Numbers, Websites, and/or "See Attached/Enclosed".

Link-Belt Used Pricelist

Alternate 6

Section III: Construction, Road, Bridge, and Repair Equipment (Pre-Owned/Reconditioned/Retired Rental)- PURCHASE ONLY

Discount (%) off catalog/price list for **All Types of Pre-Owned/Reconditioned/Retired Rental Construction, Road, Bridge, Other Equipment, Accessories and Attachments.** Catalog/Price list MUST be included or proposal will not be considered. Asphalt Distributors, Accessories and Attachments.

Total: 10%

Item Attributes

1. State Name of Manufacturer Catalog or Product Price list Proposed with Discount Percentage

NOTE: Do not reference SKU, Reference Numbers, Websites, and/or "See Attached/Enclosed".

Takeuchi Used Pricelist

Alternate 7

Section III: Construction, Road, Bridge, and Repair Equipment (Pre-Owned/Reconditioned/Retired Rental)- PURCHASE ONLY

Discount (%) off catalog/price list for **All Types of Pre-Owned/Reconditioned/Retired Rental Construction, Road, Bridge, Other Equipment, Accessories and Attachments.** Catalog/Price list MUST be included or proposal will not be considered. Asphalt Distributors, Accessories and Attachments.

Total: 10%

Item Attributes

1. State Name of Manufacturer Catalog or Product Price list Proposed with Discount Percentage

NOTE: Do not reference SKU, Reference Numbers, Websites, and/or "See Attached/Enclosed".

Wirtgen Used Pricelist

52

Section IV: Street Sweepers, Sand/Salt Spreading, Snowplows and Deicing Road and Bridge Equipment- PURCHASE ONLY

Discount (%) off catalog/price list for **Broom Street Sweepers, Accessories and Attachments.** Catalog/Price list MUST be included or proposal will not be considered. Asphalt Distributors, Accessories and Attachments.

No Bid

Item Notes: **PROPOSAL NOTE 1:** Vendors shall submit catalog(s)/price list(s) with their Proposal response or the Proposal will not be considered. Vendors shall submit catalog(s)/price list(s) with the Proposal in a readily available and readable electronic format, with Excel or searchable PDF preferred. **No paper catalogs or manufacturer/vendor websites will be accepted.**

PROPOSAL NOTE 2: A Vendor proposing shall be approved and authorized by the manufacturer to sell, install, and service the brand(s) of product(s) proposed. Proposers responding to this Proposal Invitation shall submit an approval letter from each manufacturer for each product line proposed. The requirement to provide an approval letter from the manufacturer applies to both seller and installers. Manufacturers responding directly to this Proposal Invitation, in lieu of an authorization letter, shall submit a written explanation that the company is the manufacturer of the product line(s) proposed. Dealer authorization agreements will not be accepted as a substitute for the manufacturer authorization letter.

The manufacturer authorization letters must include the following:
1. Composed on manufacturer letterhead (an email message is not a substitute for the letter),
2. Addressed to "The Local Government Purchasing Cooperative",
3. Dated within the current calendar year,
4. List the regions in Texas and states that Vendor is authorized to sell, install, and service product(s) proposed, and
5. Name, Title, and Signature of Authorized Official from Manufacturer.

PROPOSAL NOTE 3: **"Pre-Owned/Reconditioned/Retired Rental"** shall be defined as equipment having been checked and inspected by a manufacturer-authorized dealer prior to sale and shall be no older than sixty (60) months as of the date of delivery. Proposers responding to this Proposal Invitation for **"Pre-Owned/Reconditioned/Retired Rental"** equipment must also be approved by the manufacturer to sell pre-owned/reconditioned/retired rental equipment for the brand submitted and must submit an approval letter from each manufacturer with the Proposal. Manufacturer authorization letters must include the regions in which equipment can be sold. Equipment listed as **"Pre-Owned/Reconditioned/Retired Rental"** shall be in good and working condition and shall include a minimum warranty of one-hundred eighty (180) days against any defect from workmanship and parts and shall cover equipment repairs and/or component replacement. Total equipment usage hours as displayed on the service meter will have a maximum of one thousand (1,000) hours per year of age and a minimum of seventy-five percent (75%) of wear remaining for tires, track, and/or ground engagement tools.

Vendors proposing multiple manufacturer product lines and/or catalog/price list per line item must submit the information as follows or proposal may not be considered:

- Select **"Add Alternate"** for each additional manufacturer product line and/or catalog/price list proposed
- Vendor's must list one specific percentage discount for each manufacturer and/or catalog/price list listed

Item Attributes

1. State Name of Manufacturer Catalog or Product Price list Proposed with Discount Percentage

NOTE: Do not reference SKU, Reference Numbers, Websites, and/or "See Attached/Enclosed".

No response

53 **Section IV: Street Sweepers, Sand/Salt Spreading, Snowplows and Deicing Road and Bridge Equipment- PURCHASE ONLY**

Discount (%) off catalog/price list for **Air Street Sweepers, Accessories and Attachments.** Catalog/Price list MUST be included or proposal will not be considered. Asphalt Distributors, Accessories and Attachments.

No Bid

Item Notes: **PROPOSAL NOTE 1:** Vendors shall submit catalog(s)/price list(s) with their Proposal response or the Proposal will not be considered. Vendors shall submit catalog(s)/price list(s) with the Proposal in a readily available and readable electronic format, with Excel or searchable PDF preferred. **No paper catalogs or manufacturer/vendor websites will be accepted.**

PROPOSAL NOTE 2: A Vendor proposing shall be approved and authorized by the manufacturer to sell, install, and service the brand(s) of product(s) proposed. Proposers responding to this Proposal Invitation shall submit an approval letter from each manufacturer for each product line proposed. The requirement to provide an approval letter from the manufacturer applies to both seller and installers. Manufacturers responding directly to this Proposal Invitation, in lieu of an authorization letter, shall submit a written explanation that the company is the manufacturer of the product line(s) proposed. Dealer authorization agreements will not be accepted as a substitute for the manufacturer authorization letter.

The manufacturer authorization letters must include the following:
1. Composed on manufacturer letterhead (an email message is not a substitute for the letter),
2. Addressed to "The Local Government Purchasing Cooperative",
3. Dated within the current calendar year,
4. List the regions in Texas and states that Vendor is authorized to sell, install, and service product(s) proposed, and
5. Name, Title, and Signature of Authorized Official from Manufacturer.

PROPOSAL NOTE 3: **"Pre-Owned/Reconditioned/Retired Rental"** shall be defined as equipment having been checked and inspected by a manufacturer-authorized dealer prior to sale and shall be no older than sixty (60) months as of the date of delivery. Proposers responding to this Proposal Invitation for **"Pre-Owned/Reconditioned/Retired Rental"** equipment must also be approved by the manufacturer to sell pre-owned/reconditioned/retired rental equipment for the brand submitted and must submit an approval letter from each manufacturer with the Proposal. Manufacturer authorization letters must include the regions in which equipment can be sold. Equipment listed as **"Pre-Owned/Reconditioned/Retired Rental"** shall be in good and working condition and shall include a minimum warranty of one-hundred eighty (180) days against any defect from workmanship and parts and shall cover equipment repairs and/or component replacement. Total equipment usage hours as displayed on the service meter will have a maximum of one thousand (1,000) hours per year of age and a minimum of seventy-five percent (75%) of wear remaining for tires, track, and/or ground engagement tools.

Vendors proposing multiple manufacturer product lines and/or catalog/price list per line item must submit the information as follows or proposal may not be considered:

- Select **"Add Alternate"** for each additional manufacturer product line and/or catalog/price list proposed
- Vendor's must list one specific percentage discount for each manufacturer and/or catalog/price list listed

Item Attributes

1. State Name of Manufacturer Catalog or Product Price list Proposed with Discount Percentage

NOTE: Do not reference SKU, Reference Numbers, Websites, and/or "See Attached/Enclosed".

No response

54

Section IV: Street Sweepers, Sand/Salt Spreading, Snowplows and Deicing Road and Bridge Equipment- PURCHASE ONLY

Discount (%) off catalog/price list for **Regenerative Air Street Sweepers, Accessories and Attachments.** Catalog/Price list MUST be included or proposal will not be considered. Asphalt Distributors, Accessories and Attachments.

No Bid

Item Notes: **PROPOSAL NOTE 1:** Vendors shall submit catalog(s)/price list(s) with their Proposal response or the Proposal will not be considered. Vendors shall submit catalog(s)/price list(s) with the Proposal in a readily available and readable electronic format, with Excel or searchable PDF preferred. **No paper catalogs or manufacturer/vendor websites will be accepted.**

PROPOSAL NOTE 2: A Vendor proposing shall be approved and authorized by the manufacturer to sell, install, and service the brand(s) of product(s) proposed. Proposers responding to this Proposal Invitation shall submit an approval letter from each manufacturer for each product line proposed. The requirement to provide an approval letter from the manufacturer applies to both seller and installers. Manufacturers responding directly to this Proposal Invitation, in lieu of an authorization letter, shall submit a written explanation that the company is the manufacturer of the product line(s) proposed. Dealer authorization agreements will not be accepted as a substitute for the manufacturer authorization letter.

The manufacturer authorization letters must include the following:
1. Composed on manufacturer letterhead (an email message is not a substitute for the letter),
2. Addressed to "The Local Government Purchasing Cooperative",
3. Dated within the current calendar year,
4. List the regions in Texas and states that Vendor is authorized to sell, install, and service product(s) proposed, and
5. Name, Title, and Signature of Authorized Official from Manufacturer.

PROPOSAL NOTE 3: **"Pre-Owned/Reconditioned/Retired Rental"** shall be defined as equipment having been checked and inspected by a manufacturer-authorized dealer prior to sale and shall be no older than sixty (60) months as of the date of delivery. Proposers responding to this Proposal Invitation for **"Pre-Owned/Reconditioned/Retired Rental"** equipment must also be approved by the manufacturer to sell pre-owned/reconditioned/retired rental equipment for the brand submitted and must submit an approval letter from each manufacturer with the Proposal. Manufacturer authorization letters must include the regions in which equipment can be sold. Equipment listed as **"Pre-Owned/Reconditioned/Retired Rental"** shall be in good and working condition and shall include a minimum warranty of one-hundred eighty (180) days against any defect from workmanship and parts and shall cover equipment repairs and/or component replacement. Total equipment usage hours as displayed on the service meter will have a maximum of one thousand (1,000) hours per year of age and a minimum of seventy-five percent (75%) of wear remaining for tires, track, and/or ground engagement tools.

Vendors proposing multiple manufacturer product lines and/or catalog/price list per line item must submit the information as follows or proposal may not be considered:

- Select **"Add Alternate"** for each additional manufacturer product line and/or catalog/price list proposed
- Vendor's must list one specific percentage discount for each manufacturer and/or catalog/price list listed

Item Attributes

1. State Name of Manufacturer Catalog or Product Price list Proposed with Discount Percentage

NOTE: Do not reference SKU, Reference Numbers, Websites, and/or "See Attached/Enclosed".

No response

55

Section IV: Street Sweepers, Sand/Salt Spreading, Snowplows and Deicing Road and Bridge Equipment- PURCHASE ONLY

Discount (%) off catalog/price list for **Waterless Street Sweepers, Accessories and Attachments.** Catalog/Price list MUST be included or proposal will not be considered. Asphalt Distributors, Accessories and Attachments.

No Bid

Item Notes: **PROPOSAL NOTE 1:** Vendors shall submit catalog(s)/price list(s) with their Proposal response or the Proposal will not be considered. Vendors shall submit catalog(s)/price list(s) with the Proposal in a readily available and readable electronic format, with Excel or searchable PDF preferred. **No paper catalogs or manufacturer/vendor websites will be accepted.**

PROPOSAL NOTE 2: A Vendor proposing shall be approved and authorized by the manufacturer to sell, install, and service the brand(s) of product(s) proposed. Proposers responding to this Proposal Invitation shall submit an approval letter from each manufacturer for each product line proposed. The requirement to provide an approval letter from the manufacturer applies to both seller and installers. Manufacturers responding directly to this Proposal Invitation, in lieu of an authorization letter, shall submit a written explanation that the company is the manufacturer of the product line(s) proposed. Dealer authorization agreements will not be accepted as a substitute for the manufacturer authorization letter.

The manufacturer authorization letters must include the following:
1. Composed on manufacturer letterhead (an email message is not a substitute for the letter),
2. Addressed to "The Local Government Purchasing Cooperative",
3. Dated within the current calendar year,
4. List the regions in Texas and states that Vendor is authorized to sell, install, and service product(s) proposed, and
5. Name, Title, and Signature of Authorized Official from Manufacturer.

PROPOSAL NOTE 3: **"Pre-Owned/Reconditioned/Retired Rental"** shall be defined as equipment having been checked and inspected by a manufacturer-authorized dealer prior to sale and shall be no older than sixty (60) months as of the date of delivery. Proposers responding to this Proposal Invitation for **"Pre-Owned/Reconditioned/Retired Rental"** equipment must also be approved by the manufacturer to sell pre-owned/reconditioned/retired rental equipment for the brand submitted and must submit an approval letter from each manufacturer with the Proposal. Manufacturer authorization letters must include the regions in which equipment can be sold. Equipment listed as **"Pre-Owned/Reconditioned/Retired Rental"** shall be in good and working condition and shall include a minimum warranty of one-hundred eighty (180) days against any defect from workmanship and parts and shall cover equipment repairs and/or component replacement. Total equipment usage hours as displayed on the service meter will have a maximum of one thousand (1,000) hours per year of age and a minimum of seventy-five percent (75%) of wear remaining for tires, track, and/or ground engagement tools.

Vendors proposing multiple manufacturer product lines and/or catalog/price list per line item must submit the information as follows or proposal may not be considered:

- Select **"Add Alternate"** for each additional manufacturer product line and/or catalog/price list proposed
- Vendor's must list one specific percentage discount for each manufacturer and/or catalog/price list listed

Item Attributes

1. State Name of Manufacturer Catalog or Product Price list Proposed with Discount Percentage

NOTE: Do not reference SKU, Reference Numbers, Websites, and/or "See Attached/Enclosed".

No response

5
6

Section IV: Street Sweepers, Sand/Salt Spreading, Snowplows and Deicing Road and Bridge Equipment- PURCHASE ONLY

Discount (%) off catalog/price list for **Alternative Fuel Street Sweepers, Accessories and Attachments.** Catalog/Price list MUST be included or proposal will not be considered. Asphalt Distributors, Accessories and Attachments.

No Bid

Item Notes: **PROPOSAL NOTE 1:** Vendors shall submit catalog(s)/price list(s) with their Proposal response or the Proposal will not be considered. Vendors shall submit catalog(s)/price list(s) with the Proposal in a readily available and readable electronic format, with Excel or searchable PDF preferred. **No paper catalogs or manufacturer/vendor websites will be accepted.**

PROPOSAL NOTE 2: A Vendor proposing shall be approved and authorized by the manufacturer to sell, install, and service the brand(s) of product(s) proposed. Proposers responding to this Proposal Invitation shall submit an approval letter from each manufacturer for each product line proposed. The requirement to provide an approval letter from the manufacturer applies to both seller and installers. Manufacturers responding directly to this Proposal Invitation, in lieu of an authorization letter, shall submit a written explanation that the company is the manufacturer of the product line(s) proposed. Dealer authorization agreements will not be accepted as a substitute for the manufacturer authorization letter.

The manufacturer authorization letters must include the following:
1. Composed on manufacturer letterhead (an email message is not a substitute for the letter),
2. Addressed to "The Local Government Purchasing Cooperative",
3. Dated within the current calendar year,
4. List the regions in Texas and states that Vendor is authorized to sell, install, and service product(s) proposed, and
5. Name, Title, and Signature of Authorized Official from Manufacturer.

PROPOSAL NOTE 3: **"Pre-Owned/Reconditioned/Retired Rental"** shall be defined as equipment having been checked and inspected by a manufacturer-authorized dealer prior to sale and shall be no older than sixty (60) months as of the date of delivery. Proposers responding to this Proposal Invitation for **"Pre-Owned/Reconditioned/Retired Rental"** equipment must also be approved by the manufacturer to sell pre-owned/reconditioned/retired rental equipment for the brand submitted and must submit an approval letter from each manufacturer with the Proposal. Manufacturer authorization letters must include the regions in which equipment can be sold. Equipment listed as **"Pre-Owned/Reconditioned/Retired Rental"** shall be in good and working condition and shall include a minimum warranty of one-hundred eighty (180) days against any defect from workmanship and parts and shall cover equipment repairs and/or component replacement. Total equipment usage hours as displayed on the service meter will have a maximum of one thousand (1,000) hours per year of age and a minimum of seventy-five percent (75%) of wear remaining for tires, track, and/or ground engagement tools.

Vendors proposing multiple manufacturer product lines and/or catalog/price list per line item must submit the information as follows or proposal may not be considered:

- Select **"Add Alternate"** for each additional manufacturer product line and/or catalog/price list proposed
- Vendor's must list one specific percentage discount for each manufacturer and/or catalog/price list listed

Item Attributes

1. State Name of Manufacturer Catalog or Product Price list Proposed with Discount Percentage

NOTE: Do not reference SKU, Reference Numbers, Websites, and/or "See Attached/Enclosed".

No response

57 **Section IV: Street Sweepers, Sand/Salt Spreading, Snowplows and Deicing Road and Bridge Equipment- PURCHASE ONLY**

Discount (%) off catalog/price list for **All Types of Mounted Sand and Salt Spreading Equipment, Accessories and Attachments** (Pick-Up, Utility, Heavy-Duty, or Tailgate). Catalog/Price list MUST be included or proposal will not be considered. Asphalt Distributors, Accessories and Attachments.

No Bid

Item Notes: **PROPOSAL NOTE 1:** Vendors shall submit catalog(s)/price list(s) with their Proposal response or the Proposal will not be considered. Vendors shall submit catalog(s)/price list(s) with the Proposal in a readily available and readable electronic format, with Excel or searchable PDF preferred. **No paper catalogs or manufacturer/vendor websites will be accepted.**

PROPOSAL NOTE 2: A Vendor proposing shall be approved and authorized by the manufacturer to sell, install, and service the brand(s) of product(s) proposed. Proposers responding to this Proposal Invitation shall submit an approval letter from each manufacturer for each product line proposed. The requirement to provide an approval letter from the manufacturer applies to both seller and installers. Manufacturers responding directly to this Proposal Invitation, in lieu of an authorization letter, shall submit a written explanation that the company is the manufacturer of the product line(s) proposed. Dealer authorization agreements will not be accepted as a substitute for the manufacturer authorization letter.

The manufacturer authorization letters must include the following:
1. Composed on manufacturer letterhead (an email message is not a substitute for the letter),
2. Addressed to "The Local Government Purchasing Cooperative",
3. Dated within the current calendar year,
4. List the regions in Texas and states that Vendor is authorized to sell, install, and service product(s) proposed, and
5. Name, Title, and Signature of Authorized Official from Manufacturer.

PROPOSAL NOTE 3: **"Pre-Owned/Reconditioned/Retired Rental"** shall be defined as equipment having been checked and inspected by a manufacturer-authorized dealer prior to sale and shall be no older than sixty (60) months as of the date of delivery. Proposers responding to this Proposal Invitation for **"Pre-Owned/Reconditioned/Retired Rental"** equipment must also be approved by the manufacturer to sell pre-owned/reconditioned/retired rental equipment for the brand submitted and must submit an approval letter from each manufacturer with the Proposal. Manufacturer authorization letters must include the regions in which equipment can be sold. Equipment listed as **"Pre-Owned/Reconditioned/Retired Rental"** shall be in good and working condition and shall include a minimum warranty of one-hundred eighty (180) days against any defect from workmanship and parts and shall cover equipment repairs and/or component replacement. Total equipment usage hours as displayed on the service meter will have a maximum of one thousand (1,000) hours per year of age and a minimum of seventy-five percent (75%) of wear remaining for tires, track, and/or ground engagement tools.

Vendors proposing multiple manufacturer product lines and/or catalog/price list per line item must submit the information as follows or proposal may not be considered:

- Select **"Add Alternate"** for each additional manufacturer product line and/or catalog/price list proposed
- Vendor's must list one specific percentage discount for each manufacturer and/or catalog/price list listed

Item Attributes

1. State Name of Manufacturer Catalog or Product Price list Proposed with Discount Percentage

NOTE: Do not reference SKU, Reference Numbers, Websites, and/or "See Attached/Enclosed".

No response

58

Section IV: Street Sweepers, Sand/Salt Spreading, Snowplows and Deicing Road and Bridge Equipment- PURCHASE ONLY

Discount (%) off catalog/price list for **Pre-Wetting Equipment, Accessories and Attachments.** Catalog/Price list MUST be included or proposal will not be considered. Asphalt Distributors, Accessories and Attachments.

No Bid

Item Notes: **PROPOSAL NOTE 1:** Vendors shall submit catalog(s)/price list(s) with their Proposal response or the Proposal will not be considered. Vendors shall submit catalog(s)/price list(s) with the Proposal in a readily available and readable electronic format, with Excel or searchable PDF preferred. **No paper catalogs or manufacturer/vendor websites will be accepted.**

PROPOSAL NOTE 2: A Vendor proposing shall be approved and authorized by the manufacturer to sell, install, and service the brand(s) of product(s) proposed. Proposers responding to this Proposal Invitation shall submit an approval letter from each manufacturer for each product line proposed. The requirement to provide an approval letter from the manufacturer applies to both seller and installers. Manufacturers responding directly to this Proposal Invitation, in lieu of an authorization letter, shall submit a written explanation that the company is the manufacturer of the product line(s) proposed. Dealer authorization agreements will not be accepted as a substitute for the manufacturer authorization letter.

The manufacturer authorization letters must include the following:
1. Composed on manufacturer letterhead (an email message is not a substitute for the letter),
2. Addressed to "The Local Government Purchasing Cooperative",
3. Dated within the current calendar year,
4. List the regions in Texas and states that Vendor is authorized to sell, install, and service product(s) proposed, and
5. Name, Title, and Signature of Authorized Official from Manufacturer.

PROPOSAL NOTE 3: **"Pre-Owned/Reconditioned/Retired Rental"** shall be defined as equipment having been checked and inspected by a manufacturer-authorized dealer prior to sale and shall be no older than sixty (60) months as of the date of delivery. Proposers responding to this Proposal Invitation for **"Pre-Owned/Reconditioned/Retired Rental"** equipment must also be approved by the manufacturer to sell pre-owned/reconditioned/retired rental equipment for the brand submitted and must submit an approval letter from each manufacturer with the Proposal. Manufacturer authorization letters must include the regions in which equipment can be sold. Equipment listed as **"Pre-Owned/Reconditioned/Retired Rental"** shall be in good and working condition and shall include a minimum warranty of one-hundred eighty (180) days against any defect from workmanship and parts and shall cover equipment repairs and/or component replacement. Total equipment usage hours as displayed on the service meter will have a maximum of one thousand (1,000) hours per year of age and a minimum of seventy-five percent (75%) of wear remaining for tires, track, and/or ground engagement tools.

Vendors proposing multiple manufacturer product lines and/or catalog/price list per line item must submit the information as follows or proposal may not be considered:

- Select **"Add Alternate"** for each additional manufacturer product line and/or catalog/price list proposed
- Vendor's must list one specific percentage discount for each manufacturer and/or catalog/price list listed

Item Attributes

1. State Name of Manufacturer Catalog or Product Price list Proposed with Discount Percentage

NOTE: Do not reference SKU, Reference Numbers, Websites, and/or "See Attached/Enclosed".

No response

59

Section IV: Street Sweepers, Sand/Salt Spreading, Snowplows and Deicing Road and Bridge Equipment- PURCHASE ONLY

Discount (%) off catalog/price list for **Snowplow Equipment, Accessories and Attachments.** Catalog/Price list MUST be included or proposal will not be considered. Asphalt Distributors, Accessories and Attachments.

No Bid

Item Notes: **PROPOSAL NOTE 1:** Vendors shall submit catalog(s)/price list(s) with their Proposal response or the Proposal will not be considered. Vendors shall submit catalog(s)/price list(s) with the Proposal in a readily available and readable electronic format, with Excel or searchable PDF preferred. **No paper catalogs or manufacturer/vendor websites will be accepted.**

PROPOSAL NOTE 2: A Vendor proposing shall be approved and authorized by the manufacturer to sell, install, and service the brand(s) of product(s) proposed. Proposers responding to this Proposal Invitation shall submit an approval letter from each manufacturer for each product line proposed. The requirement to provide an approval letter from the manufacturer applies to both seller and installers. Manufacturers responding directly to this Proposal Invitation, in lieu of an authorization letter, shall submit a written explanation that the company is the manufacturer of the product line(s) proposed. Dealer authorization agreements will not be accepted as a substitute for the manufacturer authorization letter.

The manufacturer authorization letters must include the following:
1. Composed on manufacturer letterhead (an email message is not a substitute for the letter),
2. Addressed to "The Local Government Purchasing Cooperative",
3. Dated within the current calendar year,
4. List the regions in Texas and states that Vendor is authorized to sell, install, and service product(s) proposed, and
5. Name, Title, and Signature of Authorized Official from Manufacturer.

PROPOSAL NOTE 3: **"Pre-Owned/Reconditioned/Retired Rental"** shall be defined as equipment having been checked and inspected by a manufacturer-authorized dealer prior to sale and shall be no older than sixty (60) months as of the date of delivery. Proposers responding to this Proposal Invitation for **"Pre-Owned/Reconditioned/Retired Rental"** equipment must also be approved by the manufacturer to sell pre-owned/reconditioned/retired rental equipment for the brand submitted and must submit an approval letter from each manufacturer with the Proposal. Manufacturer authorization letters must include the regions in which equipment can be sold. Equipment listed as **"Pre-Owned/Reconditioned/Retired Rental"** shall be in good and working condition and shall include a minimum warranty of one-hundred eighty (180) days against any defect from workmanship and parts and shall cover equipment repairs and/or component replacement. Total equipment usage hours as displayed on the service meter will have a maximum of one thousand (1,000) hours per year of age and a minimum of seventy-five percent (75%) of wear remaining for tires, track, and/or ground engagement tools.

Vendors proposing multiple manufacturer product lines and/or catalog/price list per line item must submit the information as follows or proposal may not be considered:

- Select **"Add Alternate"** for each additional manufacturer product line and/or catalog/price list proposed
- Vendor's must list one specific percentage discount for each manufacturer and/or catalog/price list listed

Item Attributes

1. State Name of Manufacturer Catalog or Product Price list Proposed with Discount Percentage

NOTE: Do not reference SKU, Reference Numbers, Websites, and/or "See Attached/Enclosed".

No response

60

Section IV: Street Sweepers, Sand/Salt Spreading, Snowplows and Deicing Road and Bridge Equipment- PURCHASE ONLY

Discount (%) off catalog/price list for **Deicing Equipment, Accessories and Attachments.** Catalog/Price list MUST be included or proposal will not be considered. Asphalt Distributors, Accessories and Attachments.

No Bid

Item Notes: **PROPOSAL NOTE 1:** Vendors shall submit catalog(s)/price list(s) with their Proposal response or the Proposal will not be considered. Vendors shall submit catalog(s)/price list(s) with the Proposal in a readily available and readable electronic format, with Excel or searchable PDF preferred. **No paper catalogs or manufacturer/vendor websites will be accepted.**

PROPOSAL NOTE 2: A Vendor proposing shall be approved and authorized by the manufacturer to sell, install, and service the brand(s) of product(s) proposed. Proposers responding to this Proposal Invitation shall submit an approval letter from each manufacturer for each product line proposed. The requirement to provide an approval letter from the manufacturer applies to both seller and installers. Manufacturers responding directly to this Proposal Invitation, in lieu of an authorization letter, shall submit a written explanation that the company is the manufacturer of the product line(s) proposed. Dealer authorization agreements will not be accepted as a substitute for the manufacturer authorization letter.

The manufacturer authorization letters must include the following:
1. Composed on manufacturer letterhead (an email message is not a substitute for the letter),
2. Addressed to "The Local Government Purchasing Cooperative",
3. Dated within the current calendar year,
4. List the regions in Texas and states that Vendor is authorized to sell, install, and service product(s) proposed, and
5. Name, Title, and Signature of Authorized Official from Manufacturer.

PROPOSAL NOTE 3: **"Pre-Owned/Reconditioned/Retired Rental"** shall be defined as equipment having been checked and inspected by a manufacturer-authorized dealer prior to sale and shall be no older than sixty (60) months as of the date of delivery. Proposers responding to this Proposal Invitation for **"Pre-Owned/Reconditioned/Retired Rental"** equipment must also be approved by the manufacturer to sell pre-owned/reconditioned/retired rental equipment for the brand submitted and must submit an approval letter from each manufacturer with the Proposal. Manufacturer authorization letters must include the regions in which equipment can be sold. Equipment listed as **"Pre-Owned/Reconditioned/Retired Rental"** shall be in good and working condition and shall include a minimum warranty of one-hundred eighty (180) days against any defect from workmanship and parts and shall cover equipment repairs and/or component replacement. Total equipment usage hours as displayed on the service meter will have a maximum of one thousand (1,000) hours per year of age and a minimum of seventy-five percent (75%) of wear remaining for tires, track, and/or ground engagement tools.

Vendors proposing multiple manufacturer product lines and/or catalog/price list per line item must submit the information as follows or proposal may not be considered:

- Select **"Add Alternate"** for each additional manufacturer product line and/or catalog/price list proposed
- Vendor's must list one specific percentage discount for each manufacturer and/or catalog/price list listed

Item Attributes

1. State Name of Manufacturer Catalog or Product Price list Proposed with Discount Percentage

NOTE: Do not reference SKU, Reference Numbers, Websites, and/or "See Attached/Enclosed".

No response

61

Section IV: Street Sweepers, Sand/Salt Spreading, Snowplows and Deicing Road and Bridge Equipment- PURCHASE ONLY

Discount (%) off catalog/price list for **All Other Types of Street Sweeper, Sand/Salt Spreading, Snowplows and Deicing Equipment, Accessories and Attachments.** Catalog/Price list MUST be included or proposal will not be considered. Asphalt Distributors, Accessories and Attachments.

No Bid

Item Notes: **PROPOSAL NOTE 1:** Vendors shall submit catalog(s)/price list(s) with their Proposal response or the Proposal will not be considered. Vendors shall submit catalog(s)/price list(s) with the Proposal in a readily available and readable electronic format, with Excel or searchable PDF preferred. **No paper catalogs or manufacturer/vendor websites will be accepted.**

PROPOSAL NOTE 2: A Vendor proposing shall be approved and authorized by the manufacturer to sell, install, and service the brand(s) of product(s) proposed. Proposers responding to this Proposal Invitation shall submit an approval letter from each manufacturer for each product line proposed. The requirement to provide an approval letter from the manufacturer applies to both seller and installers. Manufacturers responding directly to this Proposal Invitation, in lieu of an authorization letter, shall submit a written explanation that the company is the manufacturer of the product line(s) proposed. Dealer authorization agreements will not be accepted as a substitute for the manufacturer authorization letter.

The manufacturer authorization letters must include the following:
1. Composed on manufacturer letterhead (an email message is not a substitute for the letter),
2. Addressed to "The Local Government Purchasing Cooperative",
3. Dated within the current calendar year,
4. List the regions in Texas and states that Vendor is authorized to sell, install, and service product(s) proposed, and
5. Name, Title, and Signature of Authorized Official from Manufacturer.

PROPOSAL NOTE 3: **"Pre-Owned/Reconditioned/Retired Rental"** shall be defined as equipment having been checked and inspected by a manufacturer-authorized dealer prior to sale and shall be no older than sixty (60) months as of the date of delivery. Proposers responding to this Proposal Invitation for **"Pre-Owned/Reconditioned/Retired Rental"** equipment must also be approved by the manufacturer to sell pre-owned/reconditioned/retired rental equipment for the brand submitted and must submit an approval letter from each manufacturer with the Proposal. Manufacturer authorization letters must include the regions in which equipment can be sold. Equipment listed as **"Pre-Owned/Reconditioned/Retired Rental"** shall be in good and working condition and shall include a minimum warranty of one-hundred eighty (180) days against any defect from workmanship and parts and shall cover equipment repairs and/or component replacement. Total equipment usage hours as displayed on the service meter will have a maximum of one thousand (1,000) hours per year of age and a minimum of seventy-five percent (75%) of wear remaining for tires, track, and/or ground engagement tools.

Vendors proposing multiple manufacturer product lines and/or catalog/price list per line item must submit the information as follows or proposal may not be considered:

- Select **"Add Alternate"** for each additional manufacturer product line and/or catalog/price list proposed
- Vendor's must list one specific percentage discount for each manufacturer and/or catalog/price list listed

Item Attributes

1. State Name of Manufacturer Catalog or Product Price list Proposed with Discount Percentage

NOTE: Do not reference SKU, Reference Numbers, Websites, and/or "See Attached/Enclosed".

No response

62

Section IV: Street Sweepers, Sand/Salt Spreading, Snowplows and Deicing Road and Bridge Equipment- PURCHASE ONLY

Discount (%) off catalog/price list for **Repair Parts on All Types of Street Sweepers, Sand/Salt Spreading, Snowplows, Deicing, and Other Related Equipment, Accessories and Attachments.** Catalog/Price list MUST be included or proposal will not be considered. Asphalt Distributors, Accessories and Attachments.

No Bid

Item Notes: **PROPOSAL NOTE 1:** Vendors shall submit catalog(s)/price list(s) with their Proposal response or the Proposal will not be considered. Vendors shall submit catalog(s)/price list(s) with the Proposal in a readily available and readable electronic format, with Excel or searchable PDF preferred. **No paper catalogs or manufacturer/vendor websites will be accepted.**

PROPOSAL NOTE 2: A Vendor proposing shall be approved and authorized by the manufacturer to sell, install, and service the brand(s) of product(s) proposed. Proposers responding to this Proposal Invitation shall submit an approval letter from each manufacturer for each product line proposed. The requirement to provide an approval letter from the manufacturer applies to both seller and installers. Manufacturers responding directly to this Proposal Invitation, in lieu of an authorization letter, shall submit a written explanation that the company is the manufacturer of the product line(s) proposed. Dealer authorization agreements will not be accepted as a substitute for the manufacturer authorization letter.

The manufacturer authorization letters must include the following:
1. Composed on manufacturer letterhead (an email message is not a substitute for the letter),
2. Addressed to "The Local Government Purchasing Cooperative",
3. Dated within the current calendar year,
4. List the regions in Texas and states that Vendor is authorized to sell, install, and service product(s) proposed, and
5. Name, Title, and Signature of Authorized Official from Manufacturer.

PROPOSAL NOTE 3: **"Pre-Owned/Reconditioned/Retired Rental"** shall be defined as equipment having been checked and inspected by a manufacturer-authorized dealer prior to sale and shall be no older than sixty (60) months as of the date of delivery. Proposers responding to this Proposal Invitation for **"Pre-Owned/Reconditioned/Retired Rental"** equipment must also be approved by the manufacturer to sell pre-owned/reconditioned/retired rental equipment for the brand submitted and must submit an approval letter from each manufacturer with the Proposal. Manufacturer authorization letters must include the regions in which equipment can be sold. Equipment listed as **"Pre-Owned/Reconditioned/Retired Rental"** shall be in good and working condition and shall include a minimum warranty of one-hundred eighty (180) days against any defect from workmanship and parts and shall cover equipment repairs and/or component replacement. Total equipment usage hours as displayed on the service meter will have a maximum of one thousand (1,000) hours per year of age and a minimum of seventy-five percent (75%) of wear remaining for tires, track, and/or ground engagement tools.

Vendors proposing multiple manufacturer product lines and/or catalog/price list per line item must submit the information as follows or proposal may not be considered:

- Select **"Add Alternate"** for each additional manufacturer product line and/or catalog/price list proposed
- Vendor's must list one specific percentage discount for each manufacturer and/or catalog/price list listed

Item Attributes

1. State Name of Manufacturer Catalog or Product Price list Proposed with Discount Percentage

NOTE: Do not reference SKU, Reference Numbers, Websites, and/or "See Attached/Enclosed".

No response

63

Section V: Street Sweepers, Sand/Salt Spreading, Snowplows and Deicing Road and Bridge Equipment-RENTAL ONLY (Rental Rate Sheet must be submitted with Proposal or Proposal will not be considered.)

Discount (%) off catalog/price list for **RENTAL of All Street Sweepers, Sand/Salt Spreading, Snowplows and Deicing Road and Bridge Equipment, Accessories and Attachments.** Catalog/Price list MUST be included or proposal will not be considered. Asphalt Distributors, Accessories and Attachments.

No Bid

Item Notes: **PROPOSAL NOTE 1:** Vendors shall submit catalog(s)/price list(s) with their Proposal response or the Proposal will not be considered. Vendors shall submit catalog(s)/price list(s) with the Proposal in a readily available and readable electronic format, with Excel or searchable PDF preferred. **No paper catalogs or manufacturer/vendor websites will be accepted.**

PROPOSAL NOTE 2: A Vendor proposing shall be approved and authorized by the manufacturer to sell, install, and service the brand(s) of product(s) proposed. Proposers responding to this Proposal Invitation shall submit an approval letter from each manufacturer for each product line proposed. The requirement to provide an approval letter from the manufacturer applies to both seller and installers. Manufacturers responding directly to this Proposal Invitation, in lieu of an authorization letter, shall submit a written explanation that the company is the manufacturer of the product line(s) proposed. Dealer authorization agreements will not be accepted as a substitute for the manufacturer authorization letter.

The manufacturer authorization letters must include the following:
1. Composed on manufacturer letterhead (an email message is not a substitute for the letter),
2. Addressed to "The Local Government Purchasing Cooperative",
3. Dated within the current calendar year,
4. List the regions in Texas and states that Vendor is authorized to sell, install, and service product(s) proposed, and
5. Name, Title, and Signature of Authorized Official from Manufacturer.

PROPOSAL NOTE 3: **"Pre-Owned/Reconditioned/Retired Rental"** shall be defined as equipment having been checked and inspected by a manufacturer-authorized dealer prior to sale and shall be no older than sixty (60) months as of the date of delivery. Proposers responding to this Proposal Invitation for **"Pre-Owned/Reconditioned/Retired Rental"** equipment must also be approved by the manufacturer to sell pre-owned/reconditioned/retired rental equipment for the brand submitted and must submit an approval letter from each manufacturer with the Proposal. Manufacturer authorization letters must include the regions in which equipment can be sold. Equipment listed as **"Pre-Owned/Reconditioned/Retired Rental"** shall be in good and working condition and shall include a minimum warranty of one-hundred eighty (180) days against any defect from workmanship and parts and shall cover equipment repairs and/or component replacement. Total equipment usage hours as displayed on the service meter will have a maximum of one thousand (1,000) hours per year of age and a minimum of seventy-five percent (75%) of wear remaining for tires, track, and/or ground engagement tools.

Vendors proposing multiple manufacturer product lines and/or catalog/price list per line item must submit the information as follows or proposal may not be considered:

- Select **"Add Alternate"** for each additional manufacturer product line and/or catalog/price list proposed
- Vendor's must list one specific percentage discount for each manufacturer and/or catalog/price list listed

Item Attributes

1. State Name of Manufacturer Catalog or Product Price list Proposed with Discount Percentage

NOTE: Do not reference SKU, Reference Numbers, Websites, and/or "See Attached/Enclosed".

No response

64

Section VI: Street Sweepers, Sand/Salt Spreading, Snowplows and Deicing Road and Bridge Equipment (Pre-Owned/Reconditioned/Retired Rental)**-PURCHASE ONLY**

Discount (%) off catalog/price list for **All Types of Pre-Owned/Reconditioned/Retired Rental Street Sweepers, Sand/Salt Spreading, Snowplows and Deicing Road and Bridge Equipment, Accessories and Attachments.** Catalog/Price list MUST be included or proposal will not be considered. Asphalt Distributors, Accessories and Attachments.

No Bid

Item Notes: **PROPOSAL NOTE 1:** Vendors shall submit catalog(s)/price list(s) with their Proposal response or the Proposal will not be considered. Vendors shall submit catalog(s)/price list(s) with the Proposal in a readily available and readable electronic format, with Excel or searchable PDF preferred. **No paper catalogs or manufacturer/vendor websites will be accepted.**

PROPOSAL NOTE 2: A Vendor proposing shall be approved and authorized by the manufacturer to sell, install, and service the brand(s) of product(s) proposed. Proposers responding to this Proposal Invitation shall submit an approval letter from each manufacturer for each product line proposed. The requirement to provide an approval letter from the manufacturer applies to both seller and installers. Manufacturers responding directly to this Proposal Invitation, in lieu of an authorization letter, shall submit a written explanation that the company is the manufacturer of the product line(s) proposed. Dealer authorization agreements will not be accepted as a substitute for the manufacturer authorization letter.

The manufacturer authorization letters must include the following:
1. Composed on manufacturer letterhead (an email message is not a substitute for the letter),
2. Addressed to "The Local Government Purchasing Cooperative",
3. Dated within the current calendar year,
4. List the regions in Texas and states that Vendor is authorized to sell, install, and service product(s) proposed, and
5. Name, Title, and Signature of Authorized Official from Manufacturer.

PROPOSAL NOTE 3: **"Pre-Owned/Reconditioned/Retired Rental"** shall be defined as equipment having been checked and inspected by a manufacturer-authorized dealer prior to sale and shall be no older than sixty (60) months as of the date of delivery. Proposers responding to this Proposal Invitation for **"Pre-Owned/Reconditioned/Retired Rental"** equipment must also be approved by the manufacturer to sell pre-owned/reconditioned/retired rental equipment for the brand submitted and must submit an approval letter from each manufacturer with the Proposal. Manufacturer authorization letters must include the regions in which equipment can be sold. Equipment listed as **"Pre-Owned/Reconditioned/Retired Rental"** shall be in good and working condition and shall include a minimum warranty of one-hundred eighty (180) days against any defect from workmanship and parts and shall cover equipment repairs and/or component replacement. Total equipment usage hours as displayed on the service meter will have a maximum of one thousand (1,000) hours per year of age and a minimum of seventy-five percent (75%) of wear remaining for tires, track, and/or ground engagement tools.

Vendors proposing multiple manufacturer product lines and/or catalog/price list per line item must submit the information as follows or proposal may not be considered:

- Select **"Add Alternate"** for each additional manufacturer product line and/or catalog/price list proposed
- Vendor's must list one specific percentage discount for each manufacturer and/or catalog/price list listed

Item Attributes

1. State Name of Manufacturer Catalog or Product Price list Proposed with Discount Percentage

NOTE: Do not reference SKU, Reference Numbers, Websites, and/or "See Attached/Enclosed".

No response

65

Section VII: Soil and Road Chemical Polymers

Discount (%) off catalog/price list for **Chemical Base Polymers and Stabilizer for Soil and Road (used for soil/road to provide a chemical bond joining particles into formation).** Catalog/Price list MUST be included or proposal will not be considered. Asphalt Distributors, Accessories and Attachments.

No Bid

Item Notes: **PROPOSAL NOTE 1:** Vendors shall submit catalog(s)/price list(s) with their Proposal response or the Proposal will not be considered. Vendors shall submit catalog(s)/price list(s) with the Proposal in a readily available and readable electronic format, with Excel or searchable PDF preferred. **No paper catalogs or manufacturer/vendor websites will be accepted.**

PROPOSAL NOTE 2: A Vendor proposing shall be approved and authorized by the manufacturer to sell, install, and service the brand(s) of product(s) proposed. Proposers responding to this Proposal Invitation shall submit an approval letter from each manufacturer for each product line proposed. The requirement to provide an approval letter from the manufacturer applies to both seller and installers. Manufacturers responding directly to this Proposal Invitation, in lieu of an authorization letter, shall submit a written explanation that the company is the manufacturer of the product line(s) proposed. Dealer authorization agreements will not be accepted as a substitute for the manufacturer authorization letter.

The manufacturer authorization letters must include the following:
1. Composed on manufacturer letterhead (an email message is not a substitute for the letter),
2. Addressed to "The Local Government Purchasing Cooperative",
3. Dated within the current calendar year,
4. List the regions in Texas and states that Vendor is authorized to sell, install, and service product(s) proposed, and
5. Name, Title, and Signature of Authorized Official from Manufacturer.

PROPOSAL NOTE 3: **"Pre-Owned/Reconditioned/Retired Rental"** shall be defined as equipment having been checked and inspected by a manufacturer-authorized dealer prior to sale and shall be no older than sixty (60) months as of the date of delivery. Proposers responding to this Proposal Invitation for **"Pre-Owned/Reconditioned/Retired Rental"** equipment must also be approved by the manufacturer to sell pre-owned/reconditioned/retired rental equipment for the brand submitted and must submit an approval letter from each manufacturer with the Proposal. Manufacturer authorization letters must include the regions in which equipment can be sold. Equipment listed as **"Pre-Owned/Reconditioned/Retired Rental"** shall be in good and working condition and shall include a minimum warranty of one-hundred eighty (180) days against any defect from workmanship and parts and shall cover equipment repairs and/or component replacement. Total equipment usage hours as displayed on the service meter will have a maximum of one thousand (1,000) hours per year of age and a minimum of seventy-five percent (75%) of wear remaining for tires, track, and/or ground engagement tools.

Vendors proposing multiple manufacturer product lines and/or catalog/price list per line item must submit the information as follows or proposal may not be considered:

- Select **"Add Alternate"** for each additional manufacturer product line and/or catalog/price list proposed
- Vendor's must list one specific percentage discount for each manufacturer and/or catalog/price list listed

Item Attributes

1. State Name of Manufacturer Catalog or Product Price list Proposed with Discount Percentage

NOTE: Do not reference SKU, Reference Numbers, Websites, and/or "See Attached/Enclosed".

No response

66

Section VIII: Installation and Repair Service

Discount (%) off catalog/price list for **Maintenance Services (monthly, quarterly, and/or yearly) of Construction, Road and Bridge, Street Sweepers, Sand/Salt Spreading, Snowplows, Deicing and Other Equipment.** Catalog/Price list MUST be included or proposal will not be considered. Asphalt Distributors, Accessories and Attachments.

No Bid

Item Notes: **PROPOSAL NOTE 1:** Vendors shall submit catalog(s)/price list(s) with their Proposal response or the Proposal will not be considered. Vendors shall submit catalog(s)/price list(s) with the Proposal in a readily available and readable electronic format, with Excel or searchable PDF preferred. **No paper catalogs or manufacturer/vendor websites will be accepted.**

PROPOSAL NOTE 2: A Vendor proposing shall be approved and authorized by the manufacturer to sell, install, and service the brand(s) of product(s) proposed. Proposers responding to this Proposal Invitation shall submit an approval letter from each manufacturer for each product line proposed. The requirement to provide an approval letter from the manufacturer applies to both seller and installers. Manufacturers responding directly to this Proposal Invitation, in lieu of an authorization letter, shall submit a written explanation that the company is the manufacturer of the product line(s) proposed. Dealer authorization agreements will not be accepted as a substitute for the manufacturer authorization letter.

The manufacturer authorization letters must include the following:

1. Composed on manufacturer letterhead (an email message is not a substitute for the letter),
2. Addressed to "The Local Government Purchasing Cooperative",
3. Dated within the current calendar year,
4. List the regions in Texas and states that Vendor is authorized to sell, install, and service product(s) proposed, and
5. Name, Title, and Signature of Authorized Official from Manufacturer.

PROPOSAL NOTE 3: **"Pre-Owned/Reconditioned/Retired Rental"** shall be defined as equipment having been checked and inspected by a manufacturer-authorized dealer prior to sale and shall be no older than sixty (60) months as of the date of delivery. Proposers responding to this Proposal Invitation for **"Pre-Owned/Reconditioned/Retired Rental"** equipment must also be approved by the manufacturer to sell pre-owned/reconditioned/retired rental equipment for the brand submitted and must submit an approval letter from each manufacturer with the Proposal. Manufacturer authorization letters must include the regions in which equipment can be sold. Equipment listed as **"Pre-Owned/Reconditioned/Retired Rental"** shall be in good and working condition and shall include a minimum warranty of one-hundred eighty (180) days against any defect from workmanship and parts and shall cover equipment repairs and/or component replacement. Total equipment usage hours as displayed on the service meter will have a maximum of one thousand (1,000) hours per year of age and a minimum of seventy-five percent (75%) of wear remaining for tires, track, and/or ground engagement tools.

Vendors proposing multiple manufacturer product lines and/or catalog/price list per line item must submit the information as follows or proposal may not be considered:

- Select **"Add Alternate"** for each additional manufacturer product line and/or catalog/price list proposed
- Vendor's must list one specific percentage discount for each manufacturer and/or catalog/price list listed

Item Attributes

1. State Name of Manufacturer Catalog or Product Price list Proposed with Discount Percentage

NOTE: Do not reference SKU, Reference Numbers, Websites, and/or "See Attached/Enclosed".

No response

67	**Section VIII: Installation and Repair Service** **Hourly Labor Rate for Installation/Repair Service on All Types of Construction, Road, Bridge and Other Equipment**- **Not to Exceed** hourly labor rate for Installation/Repair Service of Equipment and Products. Quantity: 1 UOM: Hourly Labor Rate Price: $175.00 Total: $175.00
68	**Section VIII: Installation and Repair Service** **Hourly Labor Rate for Installation/Repair Service on All Types of Street Sweepers, Sand/Salt Spreading, Snowplows, Deicing and Other Equipment**- **Not to Exceed** hourly labor rate for Installation/Repair Service of Equipment and Products. Quantity: 1 UOM: Hourly Labor Rate ***No Bid***

Response Total: $175.00

Exhibit C

Form 2 - Statement Of Conflicts Of Interest (If Any)

Conflict of Interest Disclosure Instructions

The Respondent must disclose any conflicts of interest related to the goods and/or services associated with this solicitation. A conflict-of-interest statement is required if any conflicts exist, along with a detailed plan for mitigating the conflict(s). The City reserves the sole discretion to determine whether a conflict disqualifies a firm and/or whether a conflict mitigation plan is acceptable.

If a conflict of interest exists, the Respondent must:

- Complete Form CIQ
- File the form with the City Secretary
- Include a copy of the completed Form CIQ with the proposal

If no conflict of interest exists, Form CIQ is not required. Regardless of whether a conflict exists, this Form 2 must be completed and signed.

Respondent Acknowledgment

By signing below, the Respondent certifies and acknowledges the following:

1. The Respondent has reviewed the requirements of Chapter 176, Texas Local Government Code, regarding conflict-of-interest disclosures.
2. The Respondent understands that a completed Texas Ethics Commission Form CIQ must be filed with the City Secretary's Office of the City of Brownsville, Texas, within seven (7) business days after the Respondent becomes aware of a conflict.
3. The Respondent acknowledges that the completed Form CIQ is a public record and will be made available by the City Secretary in accordance with state law.
4. The Respondent understands that failure to file a required Form CIQ is a violation of state law and may result in penalties under Texas Local Government Code §176.006 and possible disqualification from consideration for award.
5. The Respondent shall submit this acknowledgment form as part of its solicitation response and attach a copy of the completed TEC Form CIQ, if applicable.

City Secretary Contact Information

City of Brownsville – Office of the City Secretary
1034 E Levee Street, City Plaza, 1st Floor, Brownsville, TX 78520
Email: City.Secretary@brownsvilletx.gov
Phone: (956) 548-6042

Certification

By signing below, the Respondent certifies that they have reviewed and understand the requirements of Chapter 176, Texas Local Government Code and have determined whether a conflict of interest exists. The Respondent further certifies that, if a conflict of interest exists, a completed Conflict of Interest Questionnaire (Form CIQ) has been or will be filed with the City Secretary in accordance with state law and that a copy of the completed Form CIQ is included with this submission, if applicable. The Respondent affirms that all information provided is true and correct and that they are authorized to bind the entity.

Signature: Annette Alaniz

Printed Name: Annette Alaniz

Title: Controller

Date: 6/23/24

Company Name: Nueces Power Equipment

Phone: (361) 289-0066

Email: annette@npetex.com

CONFLICT OF INTEREST QUESTIONNAIRE

FORM CIQ

For vendor doing business with local governmental entity

This questionnaire reflects changes made to the law by H.B. 23, 84th Leg., Regular Session.

This questionnaire is being filed in accordance with Chapter 176, Local Government Code, by a vendor who has a business relationship as defined by Section 176.001(1-a) with a local governmental entity and the vendor meets requirements under Section 176.006(a).

By law this questionnaire must be filed with the records administrator of the local governmental entity not later than the 7th business day after the date the vendor becomes aware of facts that require the statement to be filed. *See* Section 176.006(a-1), Local Government Code.

A vendor commits an offense if the vendor knowingly violates Section 176.006, Local Government Code. An offense under this section is a misdemeanor.

OFFICE USE ONLY

Date Received

1 **Name of vendor who has a business relationship with local governmental entity.**

Nueces Power Equipment.

2 ☐ **Check this box if you are filing an update to a previously filed questionnaire.** (The law requires that you file an updated completed questionnaire with the appropriate filing authority not later than the 7th business day after the date on which you became aware that the originally filed questionnaire was incomplete or inaccurate.)

3 **Name of local government officer about whom the information is being disclosed.**

N/A

Name of Officer

4 **Describe each employment or other business relationship with the local government officer, or a family member of the officer, as described by Section 176.003(a)(2)(A). Also describe any family relationship with the local government officer. Complete subparts A and B for each employment or business relationship described. Attach additional pages to this Form CIQ as necessary.**

N/A

A. Is the local government officer or a family member of the officer receiving or likely to receive taxable income, other than investment income, from the vendor?

☐ Yes ☐ No

B. Is the vendor receiving or likely to receive taxable income, other than investment income, from or at the direction of the local government officer or a family member of the officer AND the taxable income is not received from the local governmental entity?

☐ Yes ☐ No

5 **Describe each employment or business relationship that the vendor named in Section 1 maintains with a corporation or other business entity with respect to which the local government officer serves as an officer or director, or holds an ownership interest of one percent or more.**

N/A

6 ☐ Check this box if the vendor has given the local government officer or a family member of the officer one or more gifts as described in Section 176.003(a)(2)(B), excluding gifts described in Section 176.003(a-1).

7

Annette Alaniz

Signature of vendor doing business with the governmental entity

6/23/26

Date

CONFLICT OF INTEREST QUESTIONNAIRE
For vendor doing business with local governmental entity

A complete copy of Chapter 176 of the Local Government Code may be found at http://www.statutes.legis.state.tx.us/Docs/LG/htm/LG.176.htm. For easy reference, below are some of the sections cited on this form.

Local Government Code § 176.001(1-a): "Business relationship" means a connection between two or more parties based on commercial activity of one of the parties. The term does not include a connection based on:

(A) a transaction that is subject to rate or fee regulation by a federal, state, or local governmental entity or an agency of a federal, state, or local governmental entity;

(B) a transaction conducted at a price and subject to terms available to the public; or

(C) a purchase or lease of goods or services from a person that is chartered by a state or federal agency and that is subject to regular examination by, and reporting to, that agency.

Local Government Code § 176.003(a)(2)(A) and (B):

(a) A local government officer shall file a conflicts disclosure statement with respect to a vendor if:

***

(2) the vendor:

(A) has an employment or other business relationship with the local government officer or a family member of the officer that results in the officer or family member receiving taxable income, other than investment income, that exceeds $2,500 during the 12-month period preceding the date that the officer becomes aware that

(i) a contract between the local governmental entity and vendor has been executed; or

(ii) the local governmental entity is considering entering into a contract with the vendor;

(B) has given to the local government officer or a family member of the officer one or more gifts that have an aggregate value of more than $100 in the 12-month period preceding the date the officer becomes aware that:

(i) a contract between the local governmental entity and vendor has been executed; or

(ii) the local governmental entity is considering entering into a contract with the vendor.

Local Government Code § 176.006(a) and (a-1)

(a) A vendor shall file a completed conflict of interest questionnaire if the vendor has a business relationship with a local governmental entity and:

(1) has an employment or other business relationship with a local government officer of that local governmental entity, or a family member of the officer, described by Section 176.003(a)(2)(A);

(2) has given a local government officer of that local governmental entity, or a family member of the officer, one or more gifts with the aggregate value specified by Section 176.003(a)(2)(B), excluding any gift described by Section 176.003(a-1); or

(3) has a family relationship with a local government officer of that local governmental entity.

(a-1) The completed conflict of interest questionnaire must be filed with the appropriate records administrator not later than the seventh business day after the later of:

(1) the date that the vendor:

(A) begins discussions or negotiations to enter into a contract with the local governmental entity; or

(B) submits to the local governmental entity an application, response to a request for proposals or bids, correspondence, or another writing related to a potential contract with the local governmental entity; or

(2) the date the vendor becomes aware:

(A) of an employment or other business relationship with a local government officer, or a family member of the officer, described by Subsection (a);

(B) that the vendor has given one or more gifts described by Subsection (a); or

(C) of a family relationship with a local government officer.

EXHIBIT "D"

INSURANCE

Contractor shall obtain and maintain insurance coverage as agreed in paragraph 7 of the City of Brownsville Contract Agreement and ensure that coverage with the parameters contained herein remains in full force at all times during the contract period as follows:

1. **Workers' Compensation and Employers' Liability Insurance**

   Minimum Limits Consistent with Texas Worker's Compensation Act (Section 401):

   1. $100,000 bodily injury each accident
   2. $500,000 bodily injury by disease policy limit
   3. $100,000 Bodily injury by disease each employee

   Any firm performing work for or on behalf of the City of Brownsville must provide Workers' Compensation insurance.

2. **Commercial General Liability Insurance**

   Covering premises-operations, products-completed operations, independent Contractors and contractual liability, with a combined single limit bodily injury/property damage of $1,000,000. This coverage must include, but not be limited to:

   1. Coverage for the liability assumed by the Contractor under the indemnity provision of the contract.
   2. Coverage for Premises/Operations
   3. Products/Completed Operations
   4. Broad Form Contractual Liability
   5. Independent Contractors

3. **Automobile Liability Insurance**

   Covering all owned, hired and non-owned automobile equipment with the following Limits:

   1. Bodily injury

      $250,000 each person,

      $500,000 each occurrence

   2. Property damage

      $100,000 each occurrence

CERTIFICATE OF LIABILITY INSURANCE

DATE (MM/DD/YYYY): 6/19/2026

THIS CERTIFICATE IS ISSUED AS A MATTER OF INFORMATION ONLY AND CONFERS NO RIGHTS UPON THE CERTIFICATE HOLDER. THIS CERTIFICATE DOES NOT AFFIRMATIVELY OR NEGATIVELY AMEND, EXTEND OR ALTER THE COVERAGE AFFORDED BY THE POLICIES BELOW. THIS CERTIFICATE OF INSURANCE DOES NOT CONSTITUTE A CONTRACT BETWEEN THE ISSUING INSURER(S), AUTHORIZED REPRESENTATIVE OR PRODUCER, AND THE CERTIFICATE HOLDER.

IMPORTANT: If the certificate holder is an ADDITIONAL INSURED, the policy(ies) must have ADDITIONAL INSURED provisions or be endorsed. If SUBROGATION IS WAIVED, subject to the terms and conditions of the policy, certain policies may require an endorsement. A statement on this certificate does not confer rights to the certificate holder in lieu of such endorsement(s).

PRODUCER
Edgewood Partners Ins. Center
2720 3rd Avenue South Ste 100
Lic#0B29370
Birmingham AL 35233

CONTACT NAME: Eva hill
PHONE (A/C, No, Ext): | **FAX (A/C, No):**
E-MAIL ADDRESS: eva.hill@epicbrokers.com

INSURER(S) AFFORDING COVERAGE	NAIC #
INSURER A : United Fire and Casualty Company	13021
INSURER B : Federal Insurance Company	20281
INSURER C : Travelers Lloyds Insurance Company	41262
INSURER D :	
INSURER E :	
INSURER F :	

INSURED NUECPOW
Nueces Farm Center Inc Dba Nueces Power Equipment
PO Box 4789
Corpus Christi, TX 78469

COVERAGES **CERTIFICATE NUMBER:** 185801191 **REVISION NUMBER:**

THIS IS TO CERTIFY THAT THE POLICIES OF INSURANCE LISTED BELOW HAVE BEEN ISSUED TO THE INSURED NAMED ABOVE FOR THE POLICY PERIOD INDICATED. NOTWITHSTANDING ANY REQUIREMENT, TERM OR CONDITION OF ANY CONTRACT OR OTHER DOCUMENT WITH RESPECT TO WHICH THIS CERTIFICATE MAY BE ISSUED OR MAY PERTAIN, THE INSURANCE AFFORDED BY THE POLICIES DESCRIBED HEREIN IS SUBJECT TO ALL THE TERMS, EXCLUSIONS AND CONDITIONS OF SUCH POLICIES. LIMITS SHOWN MAY HAVE BEEN REDUCED BY PAID CLAIMS.

INSR LTR	TYPE OF INSURANCE	ADDL INSD	SUBR WVD	POLICY NUMBER	POLICY EFF (MM/DD/YYYY)	POLICY EXP (MM/DD/YYYY)	LIMITS	
A	X **COMMERCIAL GENERAL LIABILITY** CLAIMS-MADE X OCCUR GEN'L AGGREGATE LIMIT APPLIES PER: POLICY X PRO-JECT X LOC OTHER:	Y	Y	10004279552	4/1/2026	4/1/2027	EACH OCCURRENCE DAMAGE TO RENTED PREMISES (Ea occurrence) MED EXP (Any one person) PERSONAL & ADV INJURY GENERAL AGGREGATE PRODUCTS - COMP/OP AGG	$ 1,000,000 $ 300,000 $ 10,000 $ 1,000,000 $ 2,000,000 $ 2,000,000
A	**AUTOMOBILE LIABILITY** X ANY AUTO OWNED AUTOS ONLY X SCHEDULED AUTOS X HIRED AUTOS ONLY NON-OWNED AUTOS ONLY	Y	Y	10013403051	4/1/2026	4/1/2027	COMBINED SINGLE LIMIT (Ea accident) BODILY INJURY (Per person) BODILY INJURY (Per accident) PROPERTY DAMAGE (Per accident)	$ 1,000,000 $ $ $
A B	X **UMBRELLA LIAB** X OCCUR X **EXCESS LIAB** CLAIMS-MADE DED RETENTION $	Y	Y	10065772090 56728330	4/1/2026 4/1/2026	4/1/2027 4/1/2027	EACH OCCURRENCE AGGREGATE	$ 20,000,000 $ 20,000,000
A	**WORKERS COMPENSATION AND EMPLOYERS' LIABILITY** Y / N ANYPROPRIETOR/PARTNER/EXECUTIVE OFFICER/MEMBER EXCLUDED? **(Mandatory in NH)** If yes, describe under DESCRIPTION OF OPERATIONS below	N / A	Y	10051109548	4/1/2026	4/1/2027	X PER STATUTE OTH-ER E.L. EACH ACCIDENT E.L. DISEASE - EA EMPLOYEE E.L. DISEASE - POLICY LIMIT	 $ 1,000,000 $ 1,000,000 $ 1,000,000
C	Leased and Rented			QT630A3233484TLC26	4/1/2026	4/1/2027	Limit	$1M Occ / $1M Item

DESCRIPTION OF OPERATIONS / LOCATIONS / VEHICLES (ACORD 101, Additional Remarks Schedule, may be attached if more space is required)

General Liability, Auto Liability, include blanket additional insured endorsements (on a primary and non-contributory basis), where required by written contract.

General Liability Additional Insured endorsement includes Ongoing & Completed Operations.

General Liability, Auto Liability, and Workers Compensation include blanket waiver of subrogation endorsements, as required by written contract.

Blanket Loss Payee is included on Leased & Rented equipment.

See Attached...

CERTIFICATE HOLDER

City of Brownsville
1001 East Elizabeth St
Brownsville TX 78520

CANCELLATION

SHOULD ANY OF THE ABOVE DESCRIBED POLICIES BE CANCELLED BEFORE THE EXPIRATION DATE THEREOF, NOTICE WILL BE DELIVERED IN ACCORDANCE WITH THE POLICY PROVISIONS.

AUTHORIZED REPRESENTATIVE

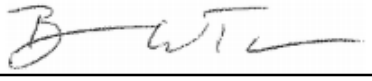

© 1988-2015 ACORD CORPORATION. All rights reserved.

AGENCY CUSTOMER ID: NUECPOW

LOC #: _____

ADDITIONAL REMARKS SCHEDULE

AGENCY Edgewood Partners Ins. Center	**NAMED INSURED** Nueces Farm Center Inc Dba Nueces Power Equipment PO Box 4789 Corpus Christi, TX 78469
POLICY NUMBER	
CARRIER / **NAIC CODE**	**EFFECTIVE DATE:**

ADDITIONAL REMARKS

THIS ADDITIONAL REMARKS FORM IS A SCHEDULE TO ACORD FORM,

FORM NUMBER: 25 **FORM TITLE:** CERTIFICATE OF LIABILITY INSURANCE

Umbrella/Excess is follow form over general liability, auto liability and employers liability;

All policies contain a 30-day notice of cancellation (10 for non-pay) subject to policy terms and conditions.

© 2008 ACORD CORPORATION. All rights reserved.

The ACORD name and logo are registered marks of ACORD

Exhibit E

Form 3 – Texas Ethics Commission Certificate of Interested Parties (Form 1295)

Purpose

This form serves as an acknowledgment of the statutory requirement for certain vendors to file a Certificate of Interested Parties (Form 1295) with the Texas Ethics Commission (TEC) before a contract can be executed with the City of Brownsville.

The requirement applies to any contract that:

- Must be approved by the City Commission or executed by a City official before becoming effective, or
- Otherwise meets the criteria established by the Texas Ethics Commission under Texas Government Code §2252.908 and 1 Texas Administrative Code Chapter 46.

Respondent Acknowledgment

By signing below, the Respondent certifies and acknowledges the following:

1. The Respondent has reviewed the requirements of Texas Government Code §2252.908 and 1 TAC Chapter 46.
2. When applicable, the Respondent shall complete and file Form 1295 electronically at https://www.ethics.state.tx.us/filinginfo/1295/ to obtain a Certificate Number issued by the TEC.
3. The Respondent shall print and provide a PDF copy to the City of Brownsville Procurement Department **after** notice of intent to award but prior to contract execution.
4. The Respondent understands that the City may not execute a contract until a completed and verified Form 1295 is received.
5. The Respondent acknowledges that the Certificate of Interested Parties will be made publicly accessible on the TEC's website in accordance with state law.

Certification

By signing below, the undersigned Respondent certifies that they have read and understood the requirements of Texas Government Code §2252.908 and 1 TAC Chapter 46 and that a completed Form 1295 will be filed and provided to the City prior to contract execution, if applicable.

The Respondent further understands that the Form 1295 itself must be signed in accordance with TEC requirements.

Signature: _____

Printed Name: BEN HERNANDEZ

Title: SALES MANAGER

Date: 6/23/26

Company Name: NUECES POWER EQUIPMENT

Phone: 361.576.0066

Email: BEN@NPETEX.COM

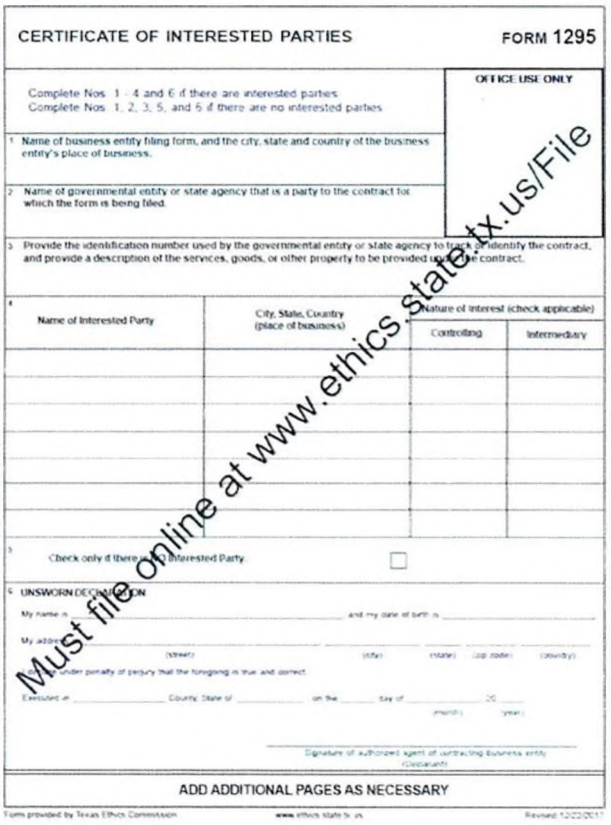

CERTIFICATE OF INTERESTED PARTIES FORM 1295

OFFICE USE ONLY

Complete Nos. 1 - 4 and 6 if there are interested parties.
Complete Nos. 1, 2, 3, 5, and 6 if there are no interested parties.

1 Name of business entity filing form, and the city, state and country of the business entity's place of business.

2 Name of governmental entity or state agency that is a party to the contract for which the form is being filed.

3 Provide the identification number used by the governmental entity or state agency to track or identify the contract, and provide a description of the services, goods, or other property to be provided under the contract.

4 Name of Interested Party	City, State, Country (place of business)	Nature of Interest (check applicable)	
		Controlling	Intermediary

5 Check only if there is NO Interested Party.

6 UNSWORN DECLARATION

My name is _____ and my date of birth is _____

My address is _____ (street) (city) (state) (zip code) (country)

I declare under penalty of perjury that the foregoing is true and correct.

Executed in _____ County, State of _____, on the _____ day of _____ (month), 20__ (year)

_____
Signature of authorized agent of contracting business entity (Declarant)

ADD ADDITIONAL PAGES AS NECESSARY

Must file online at www.ethics.state.tx.us/File

Form provided by Texas Ethics Commission www.ethics.state.tx.us Revised 12/22/2017

CERTIFICATE OF INTERESTED PARTIES

FORM 1295

Complete Nos. 1 - 4 and 6 if there are interested parties.
Complete Nos. 1, 2, 3, 5, and 6 if there are no interested parties.

OFFICE USE ONLY
CERTIFICATION OF FILING

Certificate Number:
2026-1481102

Date Filed:
06/23/2026

Date Acknowledged:

1 Name of business entity filing form, and the city, state and country of the business entity's place of business.
NUECES POWER EQUIPMENT
SAN BENITO, TX United States

2 Name of governmental entity or state agency that is a party to the contract for which the form is being filed.
City of Brownsville

3 Provide the identification number used by the governmental entity or state agency to track or identify the contract, and provide a description of the services, goods, or other property to be provided under the contract.
273-26-ISD-CP
COOPERATIVE PURCHASE AGREEMENT SP33 SLIP FORM PAVER

4 Name of Interested Party	City, State, Country (place of business)	Nature of interest (check applicable)	
		Controlling	Intermediary

5 Check only if there is NO Interested Party. [X]

6 UNSWORN DECLARATION

My name is BEN HERNANDEZ, and my date of birth is 1/7/82.

My address is 4601 US HWY 59N, VICTORIA (city), TX (state), 77905 (zip code), USA (country).

I declare under penalty of perjury that the foregoing is true and correct.

Executed in CAMERON County, State of TEXAS, on the 23 day of JUNE (month), 2026 (year).

Signature of authorized agent of contracting business entity
(Declarant)

To:	Mayor and City Commission
Through:	Alan Guard, Interim City Manager
From:	Allan Garces, Downtown Manager
Date:	Tuesday, July 21, 2026
Agenda #:	Consideration and **ACTION** to approve the purchase of trash cans and benches for Downtown Core (DT-C) as defined in Unified Development Code, and other areas of downtown as needed, based on community input from the Downtown Renaissance Master Plan in the amount of $813,339.30 as budgeted. (Planning & Redevelopment Department)

Summary:
This purchase will provide coordinated site furnishings for the Downtown Master Streetscape project, including 185 Poe litter receptacles, 10 recycling-slot shield assemblies, and 100 Plainwell benches. Landscape Forms, Inc. provided nine quotations totaling $813,339.30, consisting of $731,669.30 for the products and $81,670.00 for shipping and handling. The purchase will be made through OMNIA Contract No. 07-100, subject to verification that the contract remains active and covers the quoted products and pricing. Landscape Forms will supply the materials only; the City will be responsible for offloading and installation.

Project Scope and Analysis:

Funding:

Source: Downtown Improvements - (CIP FY25 - FY31) [811-9110-848-514 and 812-9110-848-514]

Amount: $3,750,000.00

Local Contribution if Applicable:

Recommendation:
The Procurement Department recommends that the City Commission authorize the purchase of Downtown Master Streetscape site furnishings from Landscape Forms, Inc., through OMNIA Contract No. 07-100, in a total amount not to exceed $813,339.30, inclusive of shipping and handling.

Commission Pillar:

Attachments:

1. Poster Board 1
2. Display at BCIC
3. Image
4. Image II
5. Pictures of trash cans and benches samples with EPW
6. 0000470088 Quotation - bench
7. 0000470089 Quotation - bench
8. 0000470083 Quotation - bench
9. 0000470016 Quotation
10. 0000469992 Quotation
11. 0000470003 Quotation
12. 0000470004 Quotation
13. 0000470005 Quotation
14. 0000470006 Quotation
15. Procurement Analysis Trash Cans DT Masterplan
16. Form 1295 Certificate 101570125

Trash Cans & Street Furnishings

Papeleras y mobiliario urbano

Place ONE dot on the option you prefer most for trash cans and benches.

Coloque UN punto en la opción que prefiera para botes de basura y mobiliario urbano

Sample ordered, not on display

Branded City of Brownsville bins
(Botes de basura personalizados de la Ciudad de Brownsville)

Sample ordered, not on display

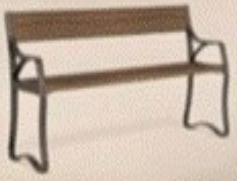

*Based on feedback from First Friday tabling and the public workshop.
(Basado en los comentarios de las presentaciones del Primer Viernes y en el aporte del público.)

La Casa del Nylon
soft landing
RECYCLE
BROWNSVILLE
ONE
TRASH
BROWNSVILLE
ONE

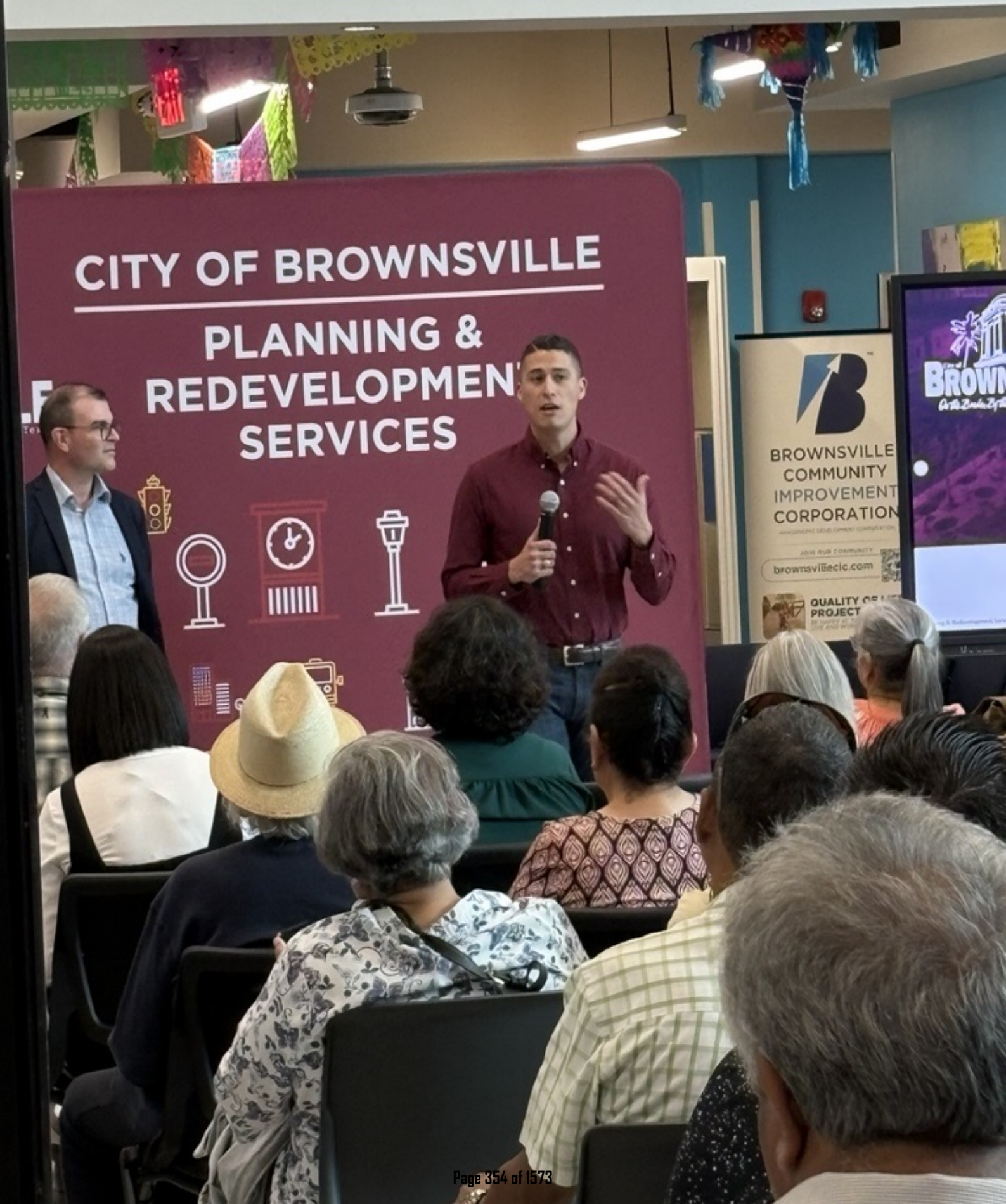
CITY OF BROWNSVILLE
PLANNING &
SERVICES
BROWNSVILLE
COMMUNITY
IMPROVEMENT
CORPORATION
brownsvilleeic.com

CITY OF BROWNSVILLE
PLANNING &
REDEVELOPMENT
SERVICES
BROWNSVILLE
ONE
ON THE BORDE
BY THE SEA
AND BEYOND
HOME OF THE
RIO GRANDE VALL
STARTUP WEE

Department of Health,
Wellness & Animal Services

Quote

Date: 07/01/2026
LF Quote#: 0000470088
PO#:
Project: City of Brownsville - Downtown Master Streetscape - Benches

CORPORATE
7800 E. Michigan Avenue
Kalamazoo, MI 49048-9543
P: 800.521.2546 F: 269.381.3455
www.landscapeforms.com
Federal I.D.# 38-1897577
FSC# PBN-COC-001261

Bill To: City of Brownsville
ATTN: Allan E. Garces
1001 E. Elizabeth St, City Plaza
1st Floor Ste 101
Brownsville, TX 78520

Ship To: City of Brownsville
ATTN: Allan E. Garces
1001 E. Elizabeth St, City Plaza
1st Floor Ste 101
Brownsville, TX 78520

Ship To Contact Phone:956-548-6182
Ship Via: Common Carrier
F.O.B.: Destination

Qty	Description	Unit Price	Total Price

CONTRACT: OMNIA #07-100

* DOCK/FORKLIFT/PALLET JACK REQUIRED TO OFFLOAD *

When ordering please confirm:

- Shipping address and contact information (name and ph#)
- Billing address and contact information
- Is your firm or the project tax exempt? If so, exemption certificate must accompany order
- Delivery schedule:

___Ship immediately upon completion
OR Ship On/After the date:_____

Order 2

34		$ 2,355.72	$ 80,094.48

Plainwell Bench

Length:	*72"*
Insert Style:	*Wood*
Wood Selection:	*Thermally Modified Ash no finish (exterior use only)*
Arm Option:	*Center Arm*
Powdercoat Color:	*Obsidian*
Standard Features:	*Freestanding/Surface Mountable*

Item Total	$ 80,094.48
Shipping & Handling	$ 8,660.00
Sub Total	$ 88,754.48
Estimated Tax	$ 0.00
Document Total	$ 88,754.48

Cust #: 66433
SSR: Kathy Murphy
Rep: Central and South Texas Team

Landscape Forms Customer Service

Purchaser | Seller

landscapeforms

Quote

Date: 07/01/2026
LF Quote#: 0000470088
PO#:
Project: City of Brownsville - Downtown Master Streetscape - Benches

CORPORATE
7800 E. Michigan Avenue
Kalamazoo, MI 49048-9543
P: 800.521.2546 F: 269.381.3455
www.landscapeforms.com
Federal I.D.# 38-1897577
FSC# PBN-COC-001261

Bill To: City of Brownsville
ATTN: Allan E. Garces
1001 E. Elizabeth St, City Plaza
1st Floor Ste 101
Brownsville, TX 78520

Ship To: City of Brownsville
ATTN: Allan E. Garces
1001 E. Elizabeth St, City Plaza
1st Floor Ste 101
Brownsville, TX 78520

Ship To Contact Phone:956-548-6182
Ship Via: Common Carrier
F.O.B.: Destination

Payment Terms: Pending-Net30

Landscape Forms, Inc. reserves the right to change payment terms based on payment history as well as information obtained from commercial credit reporting agencies.

- Purchaser is responsible for confirming options, materials, quantities, etc., for completeness and conformity to plans and specifications.
- Changes to or cancellations of standard product orders may incur a penalty charge of 30% or more.
- Orders including modified or custom product (Specials and/or Studio 431) may not be cancelled. If an order is terminated by the customer, payment in full is expected for the product subtotal regardless of current project status.
- Orders including modified or custom product (Specials, Structure and/or Studio 431) are subject to price increase after engineering/ product development is complete and approved by the customer. Modifications in price will be handled via change order.
- All manufacturing of product, as engineered and/or designed by Landscape Forms, shall be performed exclusively by Landscape Forms or its expressly authorized affiliates or subcontractors. Customer shall not engage any third party for the manufacture of said Product without the prior written consent of Landscape Forms.
- All orders that include a swing product must include an executed liability waiver to be accepted and entered into production.
- Only the Material Supplier Standard Limited Warranty shall apply to all product sold by Landscape Forms. No other warranties or changes to the standard warranty will be applied or accepted.
- No merchandise can be returned without authorization from Landscape Forms. Returns may be subject to a disposition fee of 30-100%.
- Prices based on quantities shown and quantity changes may affect price.
- QUOTED prices are held for 60 days. After receipt of a written ORDER, prices will be held for up to twelve months from receipt of the order. Changes in quantity or specification may affect pricing. Upfit and Scenic pricing will only be held for six months after receipt of a written order.
- Pricing includes selection from our standard color palette. Optional colors and custom color matches are available for an additional fee and will extend lead-time. Please contact our corporate office for more information.
- Fixtures for custom products are the property of Landscape Forms, Inc., and are not available for sale.
- Landscape Forms is a supplier only and ships via common carrier. Customer is responsible for offloading and installing unless otherwise indicated above.
- Handling fees alone will apply on third party and customer pick-up orders.
- Mounting hardware is only available on a limited number of products. Please consult the installation recommendations or contact our corporate office to confirm. In the event hardware is provided, it MUST be used for proper installation.
- Refer to Care and Maintenance guidelines for more detailed information and instructions.
- All orders ship upon completion of fabrication. A one-week grace period may be available, after which storage fees will apply.

Cust #: 66433
SSR: Kathy Murphy
Rep: Central and South Texas Team

Landscape Forms Customer Service

Purchaser | Seller

landscapeforms

Quote

Date: 07/01/2026
LF Quote#: 0000470088
PO#:
Project: City of Brownsville - Downtown Master Streetscape - Benches

Bill To: City of Brownsville
ATTN: Allan E. Garces
1001 E. Elizabeth St, City Plaza
1st Floor Ste 101
Brownsville, TX 78520

CORPORATE
7800 E. Michigan Avenue
Kalamazoo, MI 49048-9543
P: 800.521.2546 F: 269.381.3455
www.landscapeforms.com
Federal I.D.# 38-1897577
FSC# PBN-COC-001261

Ship To: City of Brownsville
ATTN: Allan E. Garces
1001 E. Elizabeth St, City Plaza
1st Floor Ste 101
Brownsville, TX 78520

Ship To Contact Phone:956-548-6182
Ship Via: Common Carrier
F.O.B.: Destination

- This Agreement contains the entire understanding between the parties. All prior communications are merged into this Agreement. The terms of this Agreement shall control any conflict between documents.
- This Agreement may be signed by the parties separately and by facsimile, and together they shall be deemed one binding, original Agreement.
- Purchaser shall pay all costs and expenses paid or incurred by Landscape Forms, Inc. in collecting any amounts due for goods purchased by Purchaser, including without limitation, reasonable attorneys' fees and collection costs. Balances on invoices not paid within 30 days of date of invoice, or within an alternate period of time as determined and indicated by Landscape Forms, shall incur interest at a rate of 18% per annum. Cash discounts are not offered.
- The quoted price may include estimated tax, duties and tariffs. Actual tax, duties and tariffs shall be purchaser's responsibility and may be added to an invoice as a separate and additional charge to purchaser unless an acceptable exemption certificate is presented.
- To the extent purchaser supplies or modifies the standard specifications for any products, Landscape Forms, Inc. expressly disclaims all representations and warranties related to such products or their design whether express or implied except that the products shall be manufactured in accordance with purchaser's specifications.
- **REMITTANCE OPTIONS:** For information on paying via credit card, ACH, direct bank transfer, or wire please email us at AR@landscapeforms.com. Please note all credit card charges will be subject to a 3% surcharge. Mail payments to:

USD Checks
Landscape Forms, Inc.
Dept 78073
PO Box 78000
Detroit, MI 48278-0073
USA

CAD Cheques
Landscape Forms, Inc.
PO Box 2408
Station A
Toronto, Ontario M5W 2K6
CAN

Cust #: 66433
SSR: Kathy Murphy
Rep: Central and South Texas Team

Landscape Forms Customer Service

Purchaser | Seller

Quote

Date: 07/01/2026
LF Quote#: 0000470089
PO#:
Project: City of Brownsville - Downtown Master Streetscape - Benches

CORPORATE
7800 E. Michigan Avenue
Kalamazoo, MI 49048-9543
P: 800.521.2546 F: 269.381.3455
www.landscapeforms.com
Federal I.D.# 38-1897577
FSC# PBN-COC-001261

Bill To: City of Brownsville
ATTN: Allan E. Garces
1001 E. Elizabeth St, City Plaza
1st Floor Ste 101
Brownsville, TX 78520

Ship To: City of Brownsville
ATTN: Allan E. Garces
1001 E. Elizabeth St, City Plaza
1st Floor Ste 101
Brownsville, TX 78520

Ship To Contact Phone:956-548-6182
Ship Via: Common Carrier
F.O.B.: Destination

Qty	Description	Unit Price	Total Price

CONTRACT: OMNIA #07-100

* DOCK/FORKLIFT/PALLET JACK REQUIRED TO OFFLOAD *

When ordering please confirm:

- Shipping address and contact information (name and ph#)
- Billing address and contact information
- Is your firm or the project tax exempt? If so, exemption certificate must accompany order
- Delivery schedule:

___Ship immediately upon completion
OR Ship On/After the date:_____

Order 3

32		$ 2,355.72	$ 75,383.04
	Plainwell Bench		
	Length: *72"*		
	Insert Style: *Wood*		
	Wood Selection: *Thermally Modified Ash no finish (exterior use only)*		
	Arm Option: *Center Arm*		
	Powdercoat Color: *Obsidian*		
	Standard Features: *Freestanding/Surface Mountable*		

Item Total	$ 75,383.04
Shipping & Handling	$ 8,150.00
Sub Total	$ 83,533.04
Estimated Tax	$ 0.00
Document Total	$ 83,533.04

Cust #: 66433
SSR: Kathy Murphy
Rep: Central and South Texas Team

Landscape Forms Customer Service

Purchaser | Seller

landscapeforms

Quote

Date: 07/01/2026
LF Quote#: 0000470089
PO#:
Project: City of Brownsville - Downtown Master Streetscape - Benches

CORPORATE
7800 E. Michigan Avenue
Kalamazoo, MI 49048-9543
P: 800.521.2546 F: 269.381.3455
www.landscapeforms.com
Federal I.D.# 38-1897577
FSC# PBN-COC-001261

Bill To: City of Brownsville
ATTN: Allan E. Garces
1001 E. Elizabeth St, City Plaza
1st Floor Ste 101
Brownsville, TX 78520

Ship To: City of Brownsville
ATTN: Allan E. Garces
1001 E. Elizabeth St, City Plaza
1st Floor Ste 101
Brownsville, TX 78520

Ship To Contact Phone:956-548-6182
Ship Via: Common Carrier
F.O.B.: Destination

Payment Terms: Pending-Net30

Landscape Forms, Inc. reserves the right to change payment terms based on payment history as well as information obtained from commercial credit reporting agencies.

- Purchaser is responsible for confirming options, materials, quantities, etc., for completeness and conformity to plans and specifications.
- Changes to or cancellations of standard product orders may incur a penalty charge of 30% or more.
- Orders including modified or custom product (Specials and/or Studio 431) may not be cancelled. If an order is terminated by the customer, payment in full is expected for the product subtotal regardless of current project status.
- Orders including modified or custom product (Specials, Structure and/or Studio 431) are subject to price increase after engineering/ product development is complete and approved by the customer. Modifications in price will be handled via change order.
- All manufacturing of product, as engineered and/or designed by Landscape Forms, shall be performed exclusively by Landscape Forms or its expressly authorized affiliates or subcontractors. Customer shall not engage any third party for the manufacture of said Product without the prior written consent of Landscape Forms.
- All orders that include a swing product must include an executed liability waiver to be accepted and entered into production.
- Only the Material Supplier Standard Limited Warranty shall apply to all product sold by Landscape Forms. No other warranties or changes to the standard warranty will be applied or accepted.
- No merchandise can be returned without authorization from Landscape Forms. Returns may be subject to a disposition fee of 30-100%.
- Prices based on quantities shown and quantity changes may affect price.
- QUOTED prices are held for 60 days. After receipt of a written ORDER, prices will be held for up to twelve months from receipt of the order. Changes in quantity or specification may affect pricing. Upfit and Scenic pricing will only be held for six months after receipt of a written order.
- Pricing includes selection from our standard color palette. Optional colors and custom color matches are available for an additional fee and will extend lead-time. Please contact our corporate office for more information.
- Fixtures for custom products are the property of Landscape Forms, Inc., and are not available for sale.
- Landscape Forms is a supplier only and ships via common carrier. Customer is responsible for offloading and installing unless otherwise indicated above.
- Handling fees alone will apply on third party and customer pick-up orders.
- Mounting hardware is only available on a limited number of products. Please consult the installation recommendations or contact our corporate office to confirm. In the event hardware is provided, it MUST be used for proper installation.
- Refer to Care and Maintenance guidelines for more detailed information and instructions.
- All orders ship upon completion of fabrication. A one-week grace period may be available, after which storage fees will apply.

Cust #: 66433
SSR: Kathy Murphy
Rep: Central and South Texas Team

Landscape Forms Customer Service

Purchaser | Seller

landscapeforms

Quote

Date: 07/01/2026
LF Quote#: 0000470089
PO#:
Project: City of Brownsville - Downtown Master Streetscape - Benches

Bill To: City of Brownsville
ATTN: Allan E. Garces
1001 E. Elizabeth St, City Plaza
1st Floor Ste 101
Brownsville, TX 78520

CORPORATE
7800 E. Michigan Avenue
Kalamazoo, MI 49048-9543
P: 800.521.2546 F: 269.381.3455
www.landscapeforms.com
Federal I.D.# 38-1897577
FSC# PBN-COC-001261

Ship To: City of Brownsville
ATTN: Allan E. Garces
1001 E. Elizabeth St, City Plaza
1st Floor Ste 101
Brownsville, TX 78520

Ship To Contact Phone:956-548-6182
Ship Via: Common Carrier
F.O.B.: Destination

- This Agreement contains the entire understanding between the parties. All prior communications are merged into this Agreement. The terms of this Agreement shall control any conflict between documents.
- This Agreement may be signed by the parties separately and by facsimile, and together they shall be deemed one binding, original Agreement.
- Purchaser shall pay all costs and expenses paid or incurred by Landscape Forms, Inc. in collecting any amounts due for goods purchased by Purchaser, including without limitation, reasonable attorneys' fees and collection costs. Balances on invoices not paid within 30 days of date of invoice, or within an alternate period of time as determined and indicated by Landscape Forms, shall incur interest at a rate of 18% per annum. Cash discounts are not offered.
- The quoted price may include estimated tax, duties and tariffs. Actual tax, duties and tariffs shall be purchaser's responsibility and may be added to an invoice as a separate and additional charge to purchaser unless an acceptable exemption certificate is presented.
- To the extent purchaser supplies or modifies the standard specifications for any products, Landscape Forms, Inc. expressly disclaims all representations and warranties related to such products or their design whether express or implied except that the products shall be manufactured in accordance with purchaser's specifications.
- **REMITTANCE OPTIONS:** For information on paying via credit card, ACH, direct bank transfer, or wire please email us at AR@landscapeforms.com. Please note all credit card charges will be subject to a 3% surcharge. Mail payments to:

USD Checks
Landscape Forms, Inc.
Dept 78073
PO Box 78000
Detroit, MI 48278-0073
USA

CAD Cheques
Landscape Forms, Inc.
PO Box 2408
Station A
Toronto, Ontario M5W 2K6
CAN

Cust #: 66433
SSR: Kathy Murphy
Rep: Central and South Texas Team

Landscape Forms Customer Service

Purchaser | Seller

Quote

Date: 07/01/2026
LF Quote#: 0000470083
PO#:
Project: City of Brownsville - Downtown Master Streetscape - Benches

CORPORATE
7800 E. Michigan Avenue
Kalamazoo, MI 49048-9543
P: 800.521.2546 F: 269.381.3455
www.landscapeforms.com
Federal I.D.# 38-1897577
FSC# PBN-COC-001261

Bill To: City of Brownsville
ATTN: Allan E. Garces
1001 E. Elizabeth St, City Plaza
1st Floor Ste 101
Brownsville, TX 78520

Ship To: City of Brownsville
ATTN: Allan E. Garces
1001 E. Elizabeth St, City Plaza
1st Floor Ste 101
Brownsville, TX 78520

Ship To Contact Phone:956-548-6182
Ship Via: Common Carrier
F.O.B.: Destination

Qty	Description	Unit Price	Total Price
	CONTRACT: OMNIA #07-100		
	* DOCK/FORKLIFT/PALLET JACK REQUIRED TO OFFLOAD *		

When ordering please confirm:

- Shipping address and contact information (name and ph#)
- Billing address and contact information
- Is your firm or the project tax exempt? If so, exemption certificate must accompany order
- Delivery schedule:

___Ship immediately upon completion
OR Ship On/After the date:_____

Order 1

34			$ 2,355.72	$ 80,094.48
	Plainwell Bench			
	Length:	*72"*		
	Insert Style:	*Wood*		
	Wood Selection:	*Thermally Modified Ash no finish (exterior use only)*		
	Arm Option:	*Center Arm*		
	Powdercoat Color:	*Obsidian*		
	Standard Features:	*Freestanding/Surface Mountable*		
1	Aerosol spray touch-up paint - 1 can Obsidian		$ 0.00	$ 0.00

Item Total	$ 80,094.48
Shipping & Handling	$ 8,670.00
Sub Total	$ 88,764.48
Estimated Tax	$ 0.00

Cust #: 66433
SSR: Kathy Murphy
Rep: Central and South Texas Team

Landscape Forms Customer Service

Purchaser | Seller

landscapeforms

Quote

Date: 07/01/2026
LF Quote#: 0000470083
PO#:
Project: City of Brownsville - Downtown Master Streetscape - Benches

Bill To: City of Brownsville
ATTN: Allan E. Garces
1001 E. Elizabeth St, City Plaza
1st Floor Ste 101
Brownsville, TX 78520

CORPORATE
7800 E. Michigan Avenue
Kalamazoo, MI 49048-9543
P: 800.521.2546 F: 269.381.3455
www.landscapeforms.com
Federal I.D.# 38-1897577
FSC# PBN-COC-001261

Ship To: City of Brownsville
ATTN: Allan E. Garces
1001 E. Elizabeth St, City Plaza
1st Floor Ste 101
Brownsville, TX 78520

Ship To Contact Phone:956-548-6182
Ship Via: Common Carrier
F.O.B.: Destination

Qty	Description	Unit Price	Total Price
		Document Total	$ 88,764.48

Payment Terms: Pending-Net30

Landscape Forms, Inc. reserves the right to change payment terms based on payment history as well as information obtained from commercial credit reporting agencies.

- Purchaser is responsible for confirming options, materials, quantities, etc., for completeness and conformity to plans and specifications.
- Changes to or cancellations of standard product orders may incur a penalty charge of 30% or more.
- Orders including modified or custom product (Specials and/or Studio 431) may not be cancelled. If an order is terminated by the customer, payment in full is expected for the product subtotal regardless of current project status.
- Orders including modified or custom product (Specials, Structure and/or Studio 431) are subject to price increase after engineering/ product development is complete and approved by the customer. Modifications in price will be handled via change order.
- All manufacturing of product, as engineered and/or designed by Landscape Forms, shall be performed exclusively by Landscape Forms or its expressly authorized affiliates or subcontractors. Customer shall not engage any third party for the manufacture of said Product without the prior written consent of Landscape Forms.
- All orders that include a swing product must include an executed liability waiver to be accepted and entered into production.
- Only the Material Supplier Standard Limited Warranty shall apply to all product sold by Landscape Forms. No other warranties or changes to the standard warranty will be applied or accepted.
- No merchandise can be returned without authorization from Landscape Forms. Returns may be subject to a disposition fee of 30-100%.
- Prices based on quantities shown and quantity changes may affect price.
- QUOTED prices are held for 60 days. After receipt of a written ORDER, prices will be held for up to twelve months from receipt of the order. Changes in quantity or specification may affect pricing. Upfit and Scenic pricing will only be held for six months after receipt of a written order.
- Pricing includes selection from our standard color palette. Optional colors and custom color matches are available for an additional fee and will extend lead-time. Please contact our corporate office for more information.
- Fixtures for custom products are the property of Landscape Forms, Inc., and are not available for sale.
- Landscape Forms is a supplier only and ships via common carrier. Customer is responsible for offloading and installing unless otherwise indicated above.

Cust #: 66433
SSR: Kathy Murphy
Rep: Central and South Texas Team

Landscape Forms Customer Service

Purchaser | Seller

landscapeforms

Quote

Date: 07/01/2026
LF Quote#: 0000470083
PO#:
Project: City of Brownsville - Downtown Master Streetscape - Benches

Bill To: City of Brownsville
ATTN: Allan E. Garces
1001 E. Elizabeth St, City Plaza
1st Floor Ste 101
Brownsville, TX 78520

CORPORATE
7800 E. Michigan Avenue
Kalamazoo, MI 49048-9543
P: 800.521.2546 F: 269.381.3455
www.landscapeforms.com
Federal I.D.# 38-1897577
FSC# PBN-COC-001261

Ship To: City of Brownsville
ATTN: Allan E. Garces
1001 E. Elizabeth St, City Plaza
1st Floor Ste 101
Brownsville, TX 78520

Ship To Contact Phone:956-548-6182
Ship Via: Common Carrier
F.O.B.: Destination

- Handling fees alone will apply on third party and customer pick-up orders.
- Mounting hardware is only available on a limited number of products. Please consult the installation recommendations or contact our corporate office to confirm. In the event hardware is provided, it MUST be used for proper installation.
- Refer to Care and Maintenance guidelines for more detailed information and instructions.
- All orders ship upon completion of fabrication. A one-week grace period may be available, after which storage fees will apply.
- This Agreement contains the entire understanding between the parties. All prior communications are merged into this Agreement. The terms of this Agreement shall control any conflict between documents.
- This Agreement may be signed by the parties separately and by facsimile, and together they shall be deemed one binding, original Agreement.
- Purchaser shall pay all costs and expenses paid or incurred by Landscape Forms, Inc. in collecting any amounts due for goods purchased by Purchaser, including without limitation, reasonable attorneys' fees and collection costs. Balances on invoices not paid within 30 days of date of invoice, or within an alternate period of time as determined and indicated by Landscape Forms, shall incur interest at a rate of 18% per annum. Cash discounts are not offered.
- The quoted price may include estimated tax, duties and tariffs. Actual tax, duties and tariffs shall be purchaser’s responsibility and may be added to an invoice as a separate and additional charge to purchaser unless an acceptable exemption certificate is presented.
- To the extent purchaser supplies or modifies the standard specifications for any products, Landscape Forms, Inc. expressly disclaims all representations and warranties related to such products or their design whether express or implied except that the products shall be manufactured in accordance with purchaser's specifications.
- **REMITTANCE OPTIONS:** For information on paying via credit card, ACH, direct bank transfer, or wire please email us at AR@landscapeforms.com. Please note all credit card charges will be subject to a 3% surcharge. Mail payments to:

USD Checks
Landscape Forms, Inc.
Dept 78073
PO Box 78000
Detroit, MI 48278-0073
USA

CAD Cheques
Landscape Forms, Inc.
PO Box 2408
Station A
Toronto, Ontario M5W 2K6
CAN

Cust #: 66433
SSR: Kathy Murphy
Rep: Central and South Texas Team

Landscape Forms Customer Service

Purchaser | Seller

Quote

Date: 07/01/2026
LF Quote#: 0000470016
PO#: (end user - City of Brownsville)
Project: City of Brownsville - Downtown Master Streetscape (Master Project) Litters

CORPORATE
7800 E. Michigan Avenue
Kalamazoo, MI 49048-9543
P: 800.521.2546 F: 269.381.3455
www.landscapeforms.com
Federal I.D.# 38-1897577
FSC# PBN-COC-001261

Bill To: City of Brownsville
ATTN: Allan E. Garces
1001 E. Elizabeth St, City Plaza
1st Floor Ste 101
Brownsville, TX 78520

Ship To: City of Brownsville
ATTN: Allan E. Garces
1001 E. Elizabeth St, City Plaza
1st Floor Ste 101
Brownsville, TX 78520

Ship To Contact Phone:956-548-6182
Ship Via: Common Carrier
F.O.B.: Destination

Qty	Description	Unit Price	Total Price
	CONTRACT: OMNIA #07-100		
	* DOCK/FORKLIFT/PALLET JACK REQUIRED TO OFFLOAD *		
	When ordering please confirm:		
	• Shipping address and contact information (name and ph#) • Billing address and contact information • Is your firm or the project tax exempt? If so, exemption certificate must accompany order • Delivery schedule: ___Ship immediately upon completion OR Ship On/After the date:_____		
	* ORDER 6		
20	Poe Litter, Side Opening w/ Slot, 34gal Capacity, w/ Lock, No Signage, Powdercoat Color: Obsidian	$ 2,654.58	$ 53,091.60
10	Poe litter side opening litter shield assembly ONLY. Opening style: Recycling slot. Includes attaching screws. Powdercoat color: Obsidian	$ 500.00	$ 5,000.00
	**ATTIC STOCK OF SLOT INSERTS. NO LONGER AVAILABLE AFTER 7/30/2026		

Item Total	$ 58,091.60
Shipping & Handling	$ 8,830.00
Sub Total	$ 66,921.60
Estimated Tax	$ 0.00
Document Total	$ 66,921.60

Payment Terms: Pending-Net30

Cust #: 66433
SSR: Kathy Murphy
Rep: Central and South Texas Team

Landscape Forms Customer Service

Purchaser | Seller

landscapeforms

Quote

Date: 07/01/2026
LF Quote#: 0000470016
PO#: (end user - City of Brownsville)
Project: City of Brownsville - Downtown Master Streetscape (Master Project) Litters

CORPORATE
7800 E. Michigan Avenue
Kalamazoo, MI 49048-9543
P: 800.521.2546 F: 269.381.3455
www.landscapeforms.com
Federal I.D.# 38-1897577
FSC# PBN-COC-001261

Bill To: City of Brownsville
ATTN: Allan E. Garces
1001 E. Elizabeth St, City Plaza
1st Floor Ste 101
Brownsville, TX 78520

Ship To: City of Brownsville
ATTN: Allan E. Garces
1001 E. Elizabeth St, City Plaza
1st Floor Ste 101
Brownsville, TX 78520

Ship To Contact Phone:956-548-6182
Ship Via: Common Carrier
F.O.B.: Destination

Landscape Forms, Inc. reserves the right to change payment terms based on payment history as well as information obtained from commercial credit reporting agencies.

- Purchaser is responsible for confirming options, materials, quantities, etc., for completeness and conformity to plans and specifications.
- Changes to or cancellations of standard product orders may incur a penalty charge of 30% or more.
- Orders including modified or custom product (Specials and/or Studio 431) may not be cancelled. If an order is terminated by the customer, payment in full is expected for the product subtotal regardless of current project status.
- Orders including modified or custom product (Specials, Structure and/or Studio 431) are subject to price increase after engineering/ product development is complete and approved by the customer. Modifications in price will be handled via change order.
- All manufacturing of product, as engineered and/or designed by Landscape Forms, shall be performed exclusively by Landscape Forms or its expressly authorized affiliates or subcontractors. Customer shall not engage any third party for the manufacture of said Product without the prior written consent of Landscape Forms.
- All orders that include a swing product must include an executed liability waiver to be accepted and entered into production.
- Only the Material Supplier Standard Limited Warranty shall apply to all product sold by Landscape Forms. No other warranties or changes to the standard warranty will be applied or accepted.
- No merchandise can be returned without authorization from Landscape Forms. Returns may be subject to a disposition fee of 30-100%.
- Prices based on quantities shown and quantity changes may affect price.
- QUOTED prices are held for 60 days. After receipt of a written ORDER, prices will be held for up to twelve months from receipt of the order. Changes in quantity or specification may affect pricing. Upfit and Scenic pricing will only be held for six months after receipt of a written order.
- Pricing includes selection from our standard color palette. Optional colors and custom color matches are available for an additional fee and will extend lead-time. Please contact our corporate office for more information.
- Fixtures for custom products are the property of Landscape Forms, Inc., and are not available for sale.
- Landscape Forms is a supplier only and ships via common carrier. Customer is responsible for offloading and installing unless otherwise indicated above.
- Handling fees alone will apply on third party and customer pick-up orders.
- Mounting hardware is only available on a limited number of products. Please consult the installation recommendations or contact our corporate office to confirm. In the event hardware is provided, it MUST be used for proper installation.
- Refer to Care and Maintenance guidelines for more detailed information and instructions.
- All orders ship upon completion of fabrication. A one-week grace period may be available, after which storage fees will apply.
- This Agreement contains the entire understanding between the parties. All prior communications are merged into this Agreement. The terms of this Agreement shall control any conflict between documents.

Cust #: 66433
SSR: Kathy Murphy
Rep: Central and South Texas Team

Landscape Forms Customer Service

Purchaser | Seller

landscapeforms

Quote

Date: 07/01/2026
LF Quote#: 0000470016
PO#: (end user - City of Brownsville)
Project: City of Brownsville - Downtown Master Streetscape (Master Project) Litters

CORPORATE
7800 E. Michigan Avenue
Kalamazoo, MI 49048-9543
P: 800.521.2546 F: 269.381.3455
www.landscapeforms.com
Federal I.D.# 38-1897577
FSC# PBN-COC-001261

Bill To: City of Brownsville
ATTN: Allan E. Garces
1001 E. Elizabeth St, City Plaza
1st Floor Ste 101
Brownsville, TX 78520

Ship To: City of Brownsville
ATTN: Allan E. Garces
1001 E. Elizabeth St, City Plaza
1st Floor Ste 101
Brownsville, TX 78520

Ship To Contact Phone:956-548-6182
Ship Via: Common Carrier
F.O.B.: Destination

- This Agreement may be signed by the parties separately and by facsimile, and together they shall be deemed one binding, original Agreement.
- Purchaser shall pay all costs and expenses paid or incurred by Landscape Forms, Inc. in collecting any amounts due for goods purchased by Purchaser, including without limitation, reasonable attorneys' fees and collection costs. Balances on invoices not paid within 30 days of date of invoice, or within an alternate period of time as determined and indicated by Landscape Forms, shall incur interest at a rate of 18% per annum. Cash discounts are not offered.
- The quoted price may include estimated tax, duties and tariffs. Actual tax, duties and tariffs shall be purchaser's responsibility and may be added to an invoice as a separate and additional charge to purchaser unless an acceptable exemption certificate is presented.
- To the extent purchaser supplies or modifies the standard specifications for any products, Landscape Forms, Inc. expressly disclaims all representations and warranties related to such products or their design whether express or implied except that the products shall be manufactured in accordance with purchaser's specifications.
- **REMITTANCE OPTIONS:** For information on paying via credit card, ACH, direct bank transfer, or wire please email us at AR@landscapeforms.com. Please note all credit card charges will be subject to a 3% surcharge. Mail payments to:

USD Checks
Landscape Forms, Inc.
Dept 78073
PO Box 78000
Detroit, MI 48278-0073
USA

CAD Cheques
Landscape Forms, Inc.
PO Box 2408
Station A
Toronto, Ontario M5W 2K6
CAN

Cust #: 66433
SSR: Kathy Murphy
Rep: Central and South Texas Team

Landscape Forms Customer Service

Purchaser | Seller

Quote

Date: 07/01/2026
LF Quote#: 0000469992
PO#: (end user - City of Brownsville)
Project: City of Brownsville - Downtown Master Streetscape (Master Project) Litters

CORPORATE
7800 E. Michigan Avenue
Kalamazoo, MI 49048-9543
P: 800.521.2546 F: 269.381.3455
www.landscapeforms.com
Federal I.D.# 38-1897577
FSC# PBN-COC-001261

Bill To: City of Brownsville
ATTN: Allan E. Garces
1001 E. Elizabeth St, City Plaza
1st Floor Ste 101
Brownsville, TX 78520

Ship To: City of Brownsville
ATTN: Allan E. Garces
1001 E. Elizabeth St, City Plaza
1st Floor Ste 101
Brownsville, TX 78520

Ship To Contact Phone:956-548-6182
Ship Via: Common Carrier
F.O.B.: Destination

Qty	Description	Unit Price	Total Price
	CONTRACT: OMNIA #07-100		
	* DOCK/FORKLIFT/PALLET JACK REQUIRED TO OFFLOAD *		
	When ordering please confirm:		
	• Shipping address and contact information (name and ph#)		
	• Billing address and contact information		
	• Is your firm or the project tax exempt? If so, exemption certificate must accompany order		
	• Delivery schedule:		
	___Ship immediately upon completion OR Ship On/After the date:_____		
	* ORDER 1		
33	Poe Litter, Side Opening w/ Slot, 34gal Capacity, w/ Lock, No Signage, Powdercoat Color: Obsidian	$ 2,654.58	$ 87,601.14
1	Aerosol spray touch-up paint - 1 can Obsidian	$ 0.00	$ 0.00

Item Total	$ 87,601.14
Shipping & Handling	$ 9,480.00
Sub Total	$ 97,081.14
Estimated Tax	$ 0.00
Document Total	$ 97,081.14

Payment Terms: Pending-Net30

Landscape Forms, Inc. reserves the right to change payment terms based on payment history as well as information obtained from commercial credit reporting agencies.

Cust #: 66433
SSR: Kathy Murphy
Rep: Central and South Texas Team

Landscape Forms Customer Service

Purchaser | Seller

landscapeforms

Quote

Date: 07/01/2026
LF Quote#: 0000469992
PO#: (end user - City of Brownsville)
Project: City of Brownsville - Downtown Master Streetscape (Master Project) Litters

CORPORATE
7800 E. Michigan Avenue
Kalamazoo, MI 49048-9543
P: 800.521.2546 F: 269.381.3455
www.landscapeforms.com
Federal I.D.# 38-1897577
FSC# PBN-COC-001261

Bill To: City of Brownsville
ATTN: Allan E. Garces
1001 E. Elizabeth St, City Plaza
1st Floor Ste 101
Brownsville, TX 78520

Ship To: City of Brownsville
ATTN: Allan E. Garces
1001 E. Elizabeth St, City Plaza
1st Floor Ste 101
Brownsville, TX 78520

Ship To Contact Phone:956-548-6182
Ship Via: Common Carrier
F.O.B.: Destination

- Purchaser is responsible for confirming options, materials, quantities, etc., for completeness and conformity to plans and specifications.
- Changes to or cancellations of standard product orders may incur a penalty charge of 30% or more.
- Orders including modified or custom product (Specials and/or Studio 431) may not be cancelled. If an order is terminated by the customer, payment in full is expected for the product subtotal regardless of current project status.
- Orders including modified or custom product (Specials, Structure and/or Studio 431) are subject to price increase after engineering/ product development is complete and approved by the customer. Modifications in price will be handled via change order.
- All manufacturing of product, as engineered and/or designed by Landscape Forms, shall be performed exclusively by Landscape Forms or its expressly authorized affiliates or subcontractors. Customer shall not engage any third party for the manufacture of said Product without the prior written consent of Landscape Forms.
- All orders that include a swing product must include an executed liability waiver to be accepted and entered into production.
- Only the Material Supplier Standard Limited Warranty shall apply to all product sold by Landscape Forms. No other warranties or changes to the standard warranty will be applied or accepted.
- No merchandise can be returned without authorization from Landscape Forms. Returns may be subject to a disposition fee of 30-100%.
- Prices based on quantities shown and quantity changes may affect price.
- QUOTED prices are held for 60 days. After receipt of a written ORDER, prices will be held for up to twelve months from receipt of the order. Changes in quantity or specification may affect pricing. Upfit and Scenic pricing will only be held for six months after receipt of a written order.
- Pricing includes selection from our standard color palette. Optional colors and custom color matches are available for an additional fee and will extend lead-time. Please contact our corporate office for more information.
- Fixtures for custom products are the property of Landscape Forms, Inc., and are not available for sale.
- Landscape Forms is a supplier only and ships via common carrier. Customer is responsible for offloading and installing unless otherwise indicated above.
- Handling fees alone will apply on third party and customer pick-up orders.
- Mounting hardware is only available on a limited number of products. Please consult the installation recommendations or contact our corporate office to confirm. In the event hardware is provided, it MUST be used for proper installation.
- Refer to Care and Maintenance guidelines for more detailed information and instructions.
- All orders ship upon completion of fabrication. A one-week grace period may be available, after which storage fees will apply.
- This Agreement contains the entire understanding between the parties. All prior communications are merged into this Agreement. The terms of this Agreement shall control any conflict between documents.
- This Agreement may be signed by the parties separately and by facsimile, and together they shall be deemed one binding, original Agreement.

Cust #: 66433
SSR: Kathy Murphy
Rep: Central and South Texas Team

Landscape Forms Customer Service

Purchaser | Seller

landscapeforms

Quote

Date: 07/01/2026
LF Quote#: 0000469992
PO#: (end user - City of Brownsville)
Project: City of Brownsville - Downtown Master Streetscape (Master Project) Litters

CORPORATE
7800 E. Michigan Avenue
Kalamazoo, MI 49048-9543
P: 800.521.2546 F: 269.381.3455
www.landscapeforms.com
Federal I.D.# 38-1897577
FSC# PBN-COC-001261

Bill To: City of Brownsville
ATTN: Allan E. Garces
1001 E. Elizabeth St, City Plaza
1st Floor Ste 101
Brownsville, TX 78520

Ship To: City of Brownsville
ATTN: Allan E. Garces
1001 E. Elizabeth St, City Plaza
1st Floor Ste 101
Brownsville, TX 78520

Ship To Contact Phone:956-548-6182
Ship Via: Common Carrier
F.O.B.: Destination

- Purchaser shall pay all costs and expenses paid or incurred by Landscape Forms, Inc. in collecting any amounts due for goods purchased by Purchaser, including without limitation, reasonable attorneys' fees and collection costs. Balances on invoices not paid within 30 days of date of invoice, or within an alternate period of time as determined and indicated by Landscape Forms, shall incur interest at a rate of 18% per annum. Cash discounts are not offered.
- The quoted price may include estimated tax, duties and tariffs. Actual tax, duties and tariffs shall be purchaser's responsibility and may be added to an invoice as a separate and additional charge to purchaser unless an acceptable exemption certificate is presented.
- To the extent purchaser supplies or modifies the standard specifications for any products, Landscape Forms, Inc. expressly disclaims all representations and warranties related to such products or their design whether express or implied except that the products shall be manufactured in accordance with purchaser's specifications.
- **REMITTANCE OPTIONS:** For information on paying via credit card, ACH, direct bank transfer, or wire please email us at AR@landscapeforms.com. Please note all credit card charges will be subject to a 3% surcharge. Mail payments to:

USD Checks
Landscape Forms, Inc.
Dept 78073
PO Box 78000
Detroit, MI 48278-0073
USA

CAD Cheques
Landscape Forms, Inc.
PO Box 2408
Station A
Toronto, Ontario M5W 2K6
CAN

Cust #: 66433
SSR: Kathy Murphy
Rep: Central and South Texas Team

Landscape Forms Customer Service

Purchaser | Seller

Quote

Date: 07/01/2026
LF Quote#: 0000470003
PO#: (end user - City of Brownsville)
Project: City of Brownsville - Downtown Master Streetscape (Master Project) Litters

CORPORATE
7800 E. Michigan Avenue
Kalamazoo, MI 49048-9543
P: 800.521.2546 F: 269.381.3455
www.landscapeforms.com
Federal I.D.# 38-1897577
FSC# PBN-COC-001261

Bill To: City of Brownsville
ATTN: Allan E. Garces
1001 E. Elizabeth St, City Plaza
1st Floor Ste 101
Brownsville, TX 78520

Ship To: City of Brownsville
ATTN: Allan E. Garces
1001 E. Elizabeth St, City Plaza
1st Floor Ste 101
Brownsville, TX 78520

Ship To Contact Phone:956-548-6182
Ship Via: Common Carrier
F.O.B.: Destination

Qty	Description	Unit Price	Total Price
	CONTRACT: OMNIA #07-100		
	* DOCK/FORKLIFT/PALLET JACK REQUIRED TO OFFLOAD *		

When ordering please confirm:

- Shipping address and contact information (name and ph#)
- Billing address and contact information
- Is your firm or the project tax exempt? If so, exemption certificate must accompany order
- Delivery schedule:

___Ship immediately upon completion
OR Ship On/After the date:_____

	* ORDER 2		
33	Poe Litter, Side Opening w/ Slot, 34gal Capacity, w/ Lock, No Signage, Powdercoat Color: Obsidian	$ 2,654.58	$ 87,601.14

Item Total	$ 87,601.14
Shipping & Handling	$ 9,470.00
Sub Total	$ 97,071.14
Estimated Tax	$ 0.00
Document Total	$ 97,071.14

Payment Terms: Pending-Net30

Landscape Forms, Inc. reserves the right to change payment terms based on payment history as well as information obtained from commercial credit reporting agencies.

Cust #: 66433
SSR: Kathy Murphy
Rep: Central and South Texas Team

Landscape Forms Customer Service

Purchaser | Seller

landscapeforms

Quote

Date: 07/01/2026
LF Quote#: 0000470003
PO#: (end user - City of Brownsville)
Project: City of Brownsville - Downtown Master Streetscape (Master Project) Litters

CORPORATE
7800 E. Michigan Avenue
Kalamazoo, MI 49048-9543
P: 800.521.2546 F: 269.381.3455
www.landscapeforms.com
Federal I.D.# 38-1897577
FSC# PBN-COC-001261

Bill To: City of Brownsville
ATTN: Allan E. Garces
1001 E. Elizabeth St, City Plaza
1st Floor Ste 101
Brownsville, TX 78520

Ship To: City of Brownsville
ATTN: Allan E. Garces
1001 E. Elizabeth St, City Plaza
1st Floor Ste 101
Brownsville, TX 78520

Ship To Contact Phone:956-548-6182
Ship Via: Common Carrier
F.O.B.: Destination

- Purchaser is responsible for confirming options, materials, quantities, etc., for completeness and conformity to plans and specifications.
- Changes to or cancellations of standard product orders may incur a penalty charge of 30% or more.
- Orders including modified or custom product (Specials and/or Studio 431) may not be cancelled. If an order is terminated by the customer, payment in full is expected for the product subtotal regardless of current project status.
- Orders including modified or custom product (Specials, Structure and/or Studio 431) are subject to price increase after engineering/ product development is complete and approved by the customer. Modifications in price will be handled via change order.
- All manufacturing of product, as engineered and/or designed by Landscape Forms, shall be performed exclusively by Landscape Forms or its expressly authorized affiliates or subcontractors. Customer shall not engage any third party for the manufacture of said Product without the prior written consent of Landscape Forms.
- All orders that include a swing product must include an executed liability waiver to be accepted and entered into production.
- Only the Material Supplier Standard Limited Warranty shall apply to all product sold by Landscape Forms. No other warranties or changes to the standard warranty will be applied or accepted.
- No merchandise can be returned without authorization from Landscape Forms. Returns may be subject to a disposition fee of 30-100%.
- Prices based on quantities shown and quantity changes may affect price.
- QUOTED prices are held for 60 days. After receipt of a written ORDER, prices will be held for up to twelve months from receipt of the order. Changes in quantity or specification may affect pricing. Upfit and Scenic pricing will only be held for six months after receipt of a written order.
- Pricing includes selection from our standard color palette. Optional colors and custom color matches are available for an additional fee and will extend lead-time. Please contact our corporate office for more information.
- Fixtures for custom products are the property of Landscape Forms, Inc., and are not available for sale.
- Landscape Forms is a supplier only and ships via common carrier. Customer is responsible for offloading and installing unless otherwise indicated above.
- Handling fees alone will apply on third party and customer pick-up orders.
- Mounting hardware is only available on a limited number of products. Please consult the installation recommendations or contact our corporate office to confirm. In the event hardware is provided, it MUST be used for proper installation.
- Refer to Care and Maintenance guidelines for more detailed information and instructions.
- All orders ship upon completion of fabrication. A one-week grace period may be available, after which storage fees will apply.
- This Agreement contains the entire understanding between the parties. All prior communications are merged into this Agreement. The terms of this Agreement shall control any conflict between documents.
- This Agreement may be signed by the parties separately and by facsimile, and together they shall be deemed one binding, original Agreement.

Cust #: 66433
SSR: Kathy Murphy
Rep: Central and South Texas Team

Landscape Forms Customer Service

Purchaser | Seller

Quote

Date: 07/01/2026
LF Quote#: 0000470003
PO#: (end user - City of Brownsville)
Project: City of Brownsville - Downtown Master Streetscape (Master Project) Litters

CORPORATE
7800 E. Michigan Avenue
Kalamazoo, MI 49048-9543
P: 800.521.2546 F: 269.381.3455
www.landscapeforms.com
Federal I.D.# 38-1897577
FSC# PBN-COC-001261

Bill To: City of Brownsville
ATTN: Allan E. Garces
1001 E. Elizabeth St, City Plaza
1st Floor Ste 101
Brownsville, TX 78520

Ship To: City of Brownsville
ATTN: Allan E. Garces
1001 E. Elizabeth St, City Plaza
1st Floor Ste 101
Brownsville, TX 78520

Ship To Contact Phone:956-548-6182
Ship Via: Common Carrier
F.O.B.: Destination

- Purchaser shall pay all costs and expenses paid or incurred by Landscape Forms, Inc. in collecting any amounts due for goods purchased by Purchaser, including without limitation, reasonable attorneys' fees and collection costs. Balances on invoices not paid within 30 days of date of invoice, or within an alternate period of time as determined and indicated by Landscape Forms, shall incur interest at a rate of 18% per annum. Cash discounts are not offered.
- The quoted price may include estimated tax, duties and tariffs. Actual tax, duties and tariffs shall be purchaser's responsibility and may be added to an invoice as a separate and additional charge to purchaser unless an acceptable exemption certificate is presented.
- To the extent purchaser supplies or modifies the standard specifications for any products, Landscape Forms, Inc. expressly disclaims all representations and warranties related to such products or their design whether express or implied except that the products shall be manufactured in accordance with purchaser's specifications.
- **REMITTANCE OPTIONS:** For information on paying via credit card, ACH, direct bank transfer, or wire please email us at AR@landscapeforms.com. Please note all credit card charges will be subject to a 3% surcharge. Mail payments to:

USD Checks
Landscape Forms, Inc.
Dept 78073
PO Box 78000
Detroit, MI 48278-0073
USA

CAD Cheques
Landscape Forms, Inc.
PO Box 2408
Station A
Toronto, Ontario M5W 2K6
CAN

Cust #: 66433
SSR: Kathy Murphy
Rep: Central and South Texas Team

Landscape Forms Customer Service

Purchaser | Seller

landscapeforms

Quote

Date: 07/01/2026
LF Quote#: 0000470004
PO#: (end user - City of Brownsville)
Project: City of Brownsville - Downtown Master Streetscape (Master Project) Litters

CORPORATE
7800 E. Michigan Avenue
Kalamazoo, MI 49048-9543
P: 800.521.2546 F: 269.381.3455
www.landscapeforms.com
Federal I.D.# 38-1897577
FSC# PBN-COC-001261

Bill To: City of Brownsville
ATTN: Allan E. Garces
1001 E. Elizabeth St, City Plaza
1st Floor Ste 101
Brownsville, TX 78520

Ship To: City of Brownsville
ATTN: Allan E. Garces
1001 E. Elizabeth St, City Plaza
1st Floor Ste 101
Brownsville, TX 78520

Ship To Contact Phone:956-548-6182
Ship Via: Common Carrier
F.O.B.: Destination

Qty	Description	Unit Price	Total Price
	CONTRACT: OMNIA #07-100		
	* DOCK/FORKLIFT/PALLET JACK REQUIRED TO OFFLOAD *		

When ordering please confirm:

- Shipping address and contact information (name and ph#)
- Billing address and contact information
- Is your firm or the project tax exempt? If so, exemption certificate must accompany order
- Delivery schedule:

___Ship immediately upon completion
OR Ship On/After the date:_____

	* ORDER 3		
33	Poe Litter, Side Opening w/ Slot, 34gal Capacity, w/ Lock, No Signage, Powdercoat Color: Obsidian	$ 2,654.58	$ 87,601.14

Item Total	$ 87,601.14
Shipping & Handling	$ 9,470.00
Sub Total	$ 97,071.14
Estimated Tax	$ 0.00
Document Total	$ 97,071.14

Payment Terms: Pending-Net30

Landscape Forms, Inc. reserves the right to change payment terms based on payment history as well as information obtained from commercial credit reporting agencies.

Cust #: 66433
SSR: Kathy Murphy
Rep: Central and South Texas Team

Landscape Forms Customer Service

Purchaser | Seller

landscapeforms

Quote

Date: 07/01/2026
LF Quote#: 0000470004
PO#: (end user - City of Brownsville)
Project: City of Brownsville - Downtown Master Streetscape (Master Project) Litters

CORPORATE
7800 E. Michigan Avenue
Kalamazoo, MI 49048-9543
P: 800.521.2546 F: 269.381.3455
www.landscapeforms.com
Federal I.D.# 38-1897577
FSC# PBN-COC-001261

Bill To: City of Brownsville
ATTN: Allan E. Garces
1001 E. Elizabeth St, City Plaza
1st Floor Ste 101
Brownsville, TX 78520

Ship To: City of Brownsville
ATTN: Allan E. Garces
1001 E. Elizabeth St, City Plaza
1st Floor Ste 101
Brownsville, TX 78520

Ship To Contact Phone:956-548-6182
Ship Via: Common Carrier
F.O.B.: Destination

- Purchaser is responsible for confirming options, materials, quantities, etc., for completeness and conformity to plans and specifications.
- Changes to or cancellations of standard product orders may incur a penalty charge of 30% or more.
- Orders including modified or custom product (Specials and/or Studio 431) may not be cancelled. If an order is terminated by the customer, payment in full is expected for the product subtotal regardless of current project status.
- Orders including modified or custom product (Specials, Structure and/or Studio 431) are subject to price increase after engineering/ product development is complete and approved by the customer. Modifications in price will be handled via change order.
- All manufacturing of product, as engineered and/or designed by Landscape Forms, shall be performed exclusively by Landscape Forms or its expressly authorized affiliates or subcontractors. Customer shall not engage any third party for the manufacture of said Product without the prior written consent of Landscape Forms.
- All orders that include a swing product must include an executed liability waiver to be accepted and entered into production.
- Only the Material Supplier Standard Limited Warranty shall apply to all product sold by Landscape Forms. No other warranties or changes to the standard warranty will be applied or accepted.
- No merchandise can be returned without authorization from Landscape Forms. Returns may be subject to a disposition fee of 30-100%.
- Prices based on quantities shown and quantity changes may affect price.
- QUOTED prices are held for 60 days. After receipt of a written ORDER, prices will be held for up to twelve months from receipt of the order. Changes in quantity or specification may affect pricing. Upfit and Scenic pricing will only be held for six months after receipt of a written order.
- Pricing includes selection from our standard color palette. Optional colors and custom color matches are available for an additional fee and will extend lead-time. Please contact our corporate office for more information.
- Fixtures for custom products are the property of Landscape Forms, Inc., and are not available for sale.
- Landscape Forms is a supplier only and ships via common carrier. Customer is responsible for offloading and installing unless otherwise indicated above.
- Handling fees alone will apply on third party and customer pick-up orders.
- Mounting hardware is only available on a limited number of products. Please consult the installation recommendations or contact our corporate office to confirm. In the event hardware is provided, it MUST be used for proper installation.
- Refer to Care and Maintenance guidelines for more detailed information and instructions.
- All orders ship upon completion of fabrication. A one-week grace period may be available, after which storage fees will apply.
- This Agreement contains the entire understanding between the parties. All prior communications are merged into this Agreement. The terms of this Agreement shall control any conflict between documents.
- This Agreement may be signed by the parties separately and by facsimile, and together they shall be deemed one binding, original Agreement.

Cust #: 66433
SSR: Kathy Murphy
Rep: Central and South Texas Team

Landscape Forms Customer Service

Purchaser | Seller

Quote

Date: 07/01/2026
LF Quote#: 0000470004
PO#: (end user - City of Brownsville)
Project: City of Brownsville - Downtown Master Streetscape (Master Project) Litters

CORPORATE
7800 E. Michigan Avenue
Kalamazoo, MI 49048-9543
P: 800.521.2546 F: 269.381.3455
www.landscapeforms.com
Federal I.D.# 38-1897577
FSC# PBN-COC-001261

Bill To: City of Brownsville
ATTN: Allan E. Garces
1001 E. Elizabeth St, City Plaza
1st Floor Ste 101
Brownsville, TX 78520

Ship To: City of Brownsville
ATTN: Allan E. Garces
1001 E. Elizabeth St, City Plaza
1st Floor Ste 101
Brownsville, TX 78520

Ship To Contact Phone:956-548-6182
Ship Via: Common Carrier
F.O.B.: Destination

- Purchaser shall pay all costs and expenses paid or incurred by Landscape Forms, Inc. in collecting any amounts due for goods purchased by Purchaser, including without limitation, reasonable attorneys' fees and collection costs. Balances on invoices not paid within 30 days of date of invoice, or within an alternate period of time as determined and indicated by Landscape Forms, shall incur interest at a rate of 18% per annum. Cash discounts are not offered.
- The quoted price may include estimated tax, duties and tariffs. Actual tax, duties and tariffs shall be purchaser's responsibility and may be added to an invoice as a separate and additional charge to purchaser unless an acceptable exemption certificate is presented.
- To the extent purchaser supplies or modifies the standard specifications for any products, Landscape Forms, Inc. expressly disclaims all representations and warranties related to such products or their design whether express or implied except that the products shall be manufactured in accordance with purchaser's specifications.
- **REMITTANCE OPTIONS:** For information on paying via credit card, ACH, direct bank transfer, or wire please email us at AR@landscapeforms.com. Please note all credit card charges will be subject to a 3% surcharge. Mail payments to:

USD Checks
Landscape Forms, Inc.
Dept 78073
PO Box 78000
Detroit, MI 48278-0073
USA

CAD Cheques
Landscape Forms, Inc.
PO Box 2408
Station A
Toronto, Ontario M5W 2K6
CAN

Cust #: 66433
SSR: Kathy Murphy
Rep: Central and South Texas Team

Landscape Forms Customer Service

Purchaser | Seller

landscapeforms

Quote

Date: 07/01/2026
LF Quote#: 0000470005
PO#: (end user - City of Brownsville)
Project: City of Brownsville - Downtown Master Streetscape (Master Project) Litters

CORPORATE
7800 E. Michigan Avenue
Kalamazoo, MI 49048-9543
P: 800.521.2546 F: 269.381.3455
www.landscapeforms.com
Federal I.D.# 38-1897577
FSC# PBN-COC-001261

Bill To: City of Brownsville
ATTN: Allan E. Garces
1001 E. Elizabeth St, City Plaza
1st Floor Ste 101
Brownsville, TX 78520

Ship To: City of Brownsville
ATTN: Allan E. Garces
1001 E. Elizabeth St, City Plaza
1st Floor Ste 101
Brownsville, TX 78520

Ship To Contact Phone:956-548-6182
Ship Via: Common Carrier
F.O.B.: Destination

Qty	Description	Unit Price	Total Price
	CONTRACT: OMNIA #07-100		
	* DOCK/FORKLIFT/PALLET JACK REQUIRED TO OFFLOAD *		

When ordering please confirm:

- Shipping address and contact information (name and ph#)
- Billing address and contact information
- Is your firm or the project tax exempt? If so, exemption certificate must accompany order
- Delivery schedule:

___Ship immediately upon completion
OR Ship On/After the date:_____

	* ORDER 4		
33	Poe Litter, Side Opening w/ Slot, 34gal Capacity, w/ Lock, No Signage, Powdercoat Color: Obsidian	$ 2,654.58	$ 87,601.14

Item Total	$ 87,601.14
Shipping & Handling	$ 9,470.00
Sub Total	$ 97,071.14
Estimated Tax	$ 0.00
Document Total	$ 97,071.14

Payment Terms: Pending-Net30

Landscape Forms, Inc. reserves the right to change payment terms based on payment history as well as information obtained from commercial credit reporting agencies.

Cust #: 66433
SSR: Kathy Murphy
Rep: Central and South Texas Team

Landscape Forms Customer Service

Purchaser | Seller

landscapeforms

Quote

Date: 07/01/2026
LF Quote#: 0000470005
PO#: (end user - City of Brownsville)
Project: City of Brownsville - Downtown Master Streetscape (Master Project) Litters

CORPORATE
7800 E. Michigan Avenue
Kalamazoo, MI 49048-9543
P: 800.521.2546 F: 269.381.3455
www.landscapeforms.com
Federal I.D.# 38-1897577
FSC# PBN-COC-001261

Bill To: City of Brownsville
ATTN: Allan E. Garces
1001 E. Elizabeth St, City Plaza
1st Floor Ste 101
Brownsville, TX 78520

Ship To: City of Brownsville
ATTN: Allan E. Garces
1001 E. Elizabeth St, City Plaza
1st Floor Ste 101
Brownsville, TX 78520

Ship To Contact Phone:956-548-6182
Ship Via: Common Carrier
F.O.B.: Destination

- Purchaser is responsible for confirming options, materials, quantities, etc., for completeness and conformity to plans and specifications.
- Changes to or cancellations of standard product orders may incur a penalty charge of 30% or more.
- Orders including modified or custom product (Specials and/or Studio 431) may not be cancelled. If an order is terminated by the customer, payment in full is expected for the product subtotal regardless of current project status.
- Orders including modified or custom product (Specials, Structure and/or Studio 431) are subject to price increase after engineering/ product development is complete and approved by the customer. Modifications in price will be handled via change order.
- All manufacturing of product, as engineered and/or designed by Landscape Forms, shall be performed exclusively by Landscape Forms or its expressly authorized affiliates or subcontractors. Customer shall not engage any third party for the manufacture of said Product without the prior written consent of Landscape Forms.
- All orders that include a swing product must include an executed liability waiver to be accepted and entered into production.
- Only the Material Supplier Standard Limited Warranty shall apply to all product sold by Landscape Forms. No other warranties or changes to the standard warranty will be applied or accepted.
- No merchandise can be returned without authorization from Landscape Forms. Returns may be subject to a disposition fee of 30-100%.
- Prices based on quantities shown and quantity changes may affect price.
- QUOTED prices are held for 60 days. After receipt of a written ORDER, prices will be held for up to twelve months from receipt of the order. Changes in quantity or specification may affect pricing. Upfit and Scenic pricing will only be held for six months after receipt of a written order.
- Pricing includes selection from our standard color palette. Optional colors and custom color matches are available for an additional fee and will extend lead-time. Please contact our corporate office for more information.
- Fixtures for custom products are the property of Landscape Forms, Inc., and are not available for sale.
- Landscape Forms is a supplier only and ships via common carrier. Customer is responsible for offloading and installing unless otherwise indicated above.
- Handling fees alone will apply on third party and customer pick-up orders.
- Mounting hardware is only available on a limited number of products. Please consult the installation recommendations or contact our corporate office to confirm. In the event hardware is provided, it MUST be used for proper installation.
- Refer to Care and Maintenance guidelines for more detailed information and instructions.
- All orders ship upon completion of fabrication. A one-week grace period may be available, after which storage fees will apply.
- This Agreement contains the entire understanding between the parties. All prior communications are merged into this Agreement. The terms of this Agreement shall control any conflict between documents.
- This Agreement may be signed by the parties separately and by facsimile, and together they shall be deemed one binding, original Agreement.

Cust #: 66433
SSR: Kathy Murphy
Rep: Central and South Texas Team

Landscape Forms Customer Service

Purchaser | Seller

Quote

Date: 07/01/2026
LF Quote#: 0000470005
PO#: (end user - City of Brownsville)
Project: City of Brownsville - Downtown Master Streetscape (Master Project) Litters

CORPORATE
7800 E. Michigan Avenue
Kalamazoo, MI 49048-9543
P: 800.521.2546 F: 269.381.3455
www.landscapeforms.com
Federal I.D.# 38-1897577
FSC# PBN-COC-001261

Bill To: City of Brownsville
ATTN: Allan E. Garces
1001 E. Elizabeth St, City Plaza
1st Floor Ste 101
Brownsville, TX 78520

Ship To: City of Brownsville
ATTN: Allan E. Garces
1001 E. Elizabeth St, City Plaza
1st Floor Ste 101
Brownsville, TX 78520

Ship To Contact Phone:956-548-6182
Ship Via: Common Carrier
F.O.B.: Destination

- Purchaser shall pay all costs and expenses paid or incurred by Landscape Forms, Inc. in collecting any amounts due for goods purchased by Purchaser, including without limitation, reasonable attorneys' fees and collection costs. Balances on invoices not paid within 30 days of date of invoice, or within an alternate period of time as determined and indicated by Landscape Forms, shall incur interest at a rate of 18% per annum. Cash discounts are not offered.
- The quoted price may include estimated tax, duties and tariffs. Actual tax, duties and tariffs shall be purchaser's responsibility and may be added to an invoice as a separate and additional charge to purchaser unless an acceptable exemption certificate is presented.
- To the extent purchaser supplies or modifies the standard specifications for any products, Landscape Forms, Inc. expressly disclaims all representations and warranties related to such products or their design whether express or implied except that the products shall be manufactured in accordance with purchaser's specifications.
- **REMITTANCE OPTIONS:** For information on paying via credit card, ACH, direct bank transfer, or wire please email us at AR@landscapeforms.com. Please note all credit card charges will be subject to a 3% surcharge. Mail payments to:

USD Checks
Landscape Forms, Inc.
Dept 78073
PO Box 78000
Detroit, MI 48278-0073
USA

CAD Cheques
Landscape Forms, Inc.
PO Box 2408
Station A
Toronto, Ontario M5W 2K6
CAN

Cust #: 66433
SSR: Kathy Murphy
Rep: Central and South Texas Team

Landscape Forms Customer Service

Purchaser | Seller

landscapeforms

Quote

Date: 07/01/2026
LF Quote#: 0000470006
PO#: (end user - City of Brownsville)
Project: City of Brownsville - Downtown Master Streetscape (Master Project) Litters

CORPORATE
7800 E. Michigan Avenue
Kalamazoo, MI 49048-9543
P: 800.521.2546 F: 269.381.3455
www.landscapeforms.com
Federal I.D.# 38-1897577
FSC# PBN-COC-001261

Bill To: City of Brownsville
ATTN: Allan E. Garces
1001 E. Elizabeth St, City Plaza
1st Floor Ste 101
Brownsville, TX 78520

Ship To: City of Brownsville
ATTN: Allan E. Garces
1001 E. Elizabeth St, City Plaza
1st Floor Ste 101
Brownsville, TX 78520

Ship To Contact Phone:956-548-6182
Ship Via: Common Carrier
F.O.B.: Destination

Qty	Description	Unit Price	Total Price
	CONTRACT: OMNIA #07-100		
	* DOCK/FORKLIFT/PALLET JACK REQUIRED TO OFFLOAD *		

When ordering please confirm:

- Shipping address and contact information (name and ph#)
- Billing address and contact information
- Is your firm or the project tax exempt? If so, exemption certificate must accompany order
- Delivery schedule:

___Ship immediately upon completion
OR Ship On/After the date:_____

	* ORDER 5		
33	Poe Litter, Side Opening w/ Slot, 34gal Capacity, w/ Lock, No Signage, Powdercoat Color: Obsidian	$ 2,654.58	$ 87,601.14

Item Total	$ 87,601.14
Shipping & Handling	$ 9,470.00
Sub Total	$ 97,071.14
Estimated Tax	$ 0.00
Document Total	$ 97,071.14

Payment Terms: Pending-Net30

Landscape Forms, Inc. reserves the right to change payment terms based on payment history as well as information obtained from commercial credit reporting agencies.

Cust #: 66433
SSR: Kathy Murphy
Rep: Central and South Texas Team

Landscape Forms Customer Service

Purchaser | Seller

landscapeforms

Quote

Date: 07/01/2026
LF Quote#: 0000470006
PO#: (end user - City of Brownsville)
Project: City of Brownsville - Downtown Master Streetscape (Master Project) Litters

CORPORATE
7800 E. Michigan Avenue
Kalamazoo, MI 49048-9543
P: 800.521.2546 F: 269.381.3455
www.landscapeforms.com
Federal I.D.# 38-1897577
FSC# PBN-COC-001261

Bill To: City of Brownsville
ATTN: Allan E. Garces
1001 E. Elizabeth St, City Plaza
1st Floor Ste 101
Brownsville, TX 78520

Ship To: City of Brownsville
ATTN: Allan E. Garces
1001 E. Elizabeth St, City Plaza
1st Floor Ste 101
Brownsville, TX 78520

Ship To Contact Phone:956-548-6182
Ship Via: Common Carrier
F.O.B.: Destination

- Purchaser is responsible for confirming options, materials, quantities, etc., for completeness and conformity to plans and specifications.
- Changes to or cancellations of standard product orders may incur a penalty charge of 30% or more.
- Orders including modified or custom product (Specials and/or Studio 431) may not be cancelled. If an order is terminated by the customer, payment in full is expected for the product subtotal regardless of current project status.
- Orders including modified or custom product (Specials, Structure and/or Studio 431) are subject to price increase after engineering/ product development is complete and approved by the customer. Modifications in price will be handled via change order.
- All manufacturing of product, as engineered and/or designed by Landscape Forms, shall be performed exclusively by Landscape Forms or its expressly authorized affiliates or subcontractors. Customer shall not engage any third party for the manufacture of said Product without the prior written consent of Landscape Forms.
- All orders that include a swing product must include an executed liability waiver to be accepted and entered into production.
- Only the Material Supplier Standard Limited Warranty shall apply to all product sold by Landscape Forms. No other warranties or changes to the standard warranty will be applied or accepted.
- No merchandise can be returned without authorization from Landscape Forms. Returns may be subject to a disposition fee of 30-100%.
- Prices based on quantities shown and quantity changes may affect price.
- QUOTED prices are held for 60 days. After receipt of a written ORDER, prices will be held for up to twelve months from receipt of the order. Changes in quantity or specification may affect pricing. Upfit and Scenic pricing will only be held for six months after receipt of a written order.
- Pricing includes selection from our standard color palette. Optional colors and custom color matches are available for an additional fee and will extend lead-time. Please contact our corporate office for more information.
- Fixtures for custom products are the property of Landscape Forms, Inc., and are not available for sale.
- Landscape Forms is a supplier only and ships via common carrier. Customer is responsible for offloading and installing unless otherwise indicated above.
- Handling fees alone will apply on third party and customer pick-up orders.
- Mounting hardware is only available on a limited number of products. Please consult the installation recommendations or contact our corporate office to confirm. In the event hardware is provided, it MUST be used for proper installation.
- Refer to Care and Maintenance guidelines for more detailed information and instructions.
- All orders ship upon completion of fabrication. A one-week grace period may be available, after which storage fees will apply.
- This Agreement contains the entire understanding between the parties. All prior communications are merged into this Agreement. The terms of this Agreement shall control any conflict between documents.
- This Agreement may be signed by the parties separately and by facsimile, and together they shall be deemed one binding, original Agreement.

Cust #: 66433
SSR: Kathy Murphy
Rep: Central and South Texas Team

Landscape Forms Customer Service

Purchaser | Seller

Quote

Date: 07/01/2026
LF Quote#: 0000470006
PO#: (end user - City of Brownsville)
Project: City of Brownsville - Downtown Master Streetscape (Master Project) Litters

CORPORATE
7800 E. Michigan Avenue
Kalamazoo, MI 49048-9543
P: 800.521.2546 F: 269.381.3455
www.landscapeforms.com
Federal I.D.# 38-1897577
FSC# PBN-COC-001261

Bill To: City of Brownsville
ATTN: Allan E. Garces
1001 E. Elizabeth St, City Plaza
1st Floor Ste 101
Brownsville, TX 78520

Ship To: City of Brownsville
ATTN: Allan E. Garces
1001 E. Elizabeth St, City Plaza
1st Floor Ste 101
Brownsville, TX 78520

Ship To Contact Phone:956-548-6182
Ship Via: Common Carrier
F.O.B.: Destination

- Purchaser shall pay all costs and expenses paid or incurred by Landscape Forms, Inc. in collecting any amounts due for goods purchased by Purchaser, including without limitation, reasonable attorneys' fees and collection costs. Balances on invoices not paid within 30 days of date of invoice, or within an alternate period of time as determined and indicated by Landscape Forms, shall incur interest at a rate of 18% per annum. Cash discounts are not offered.
- The quoted price may include estimated tax, duties and tariffs. Actual tax, duties and tariffs shall be purchaser's responsibility and may be added to an invoice as a separate and additional charge to purchaser unless an acceptable exemption certificate is presented.
- To the extent purchaser supplies or modifies the standard specifications for any products, Landscape Forms, Inc. expressly disclaims all representations and warranties related to such products or their design whether express or implied except that the products shall be manufactured in accordance with purchaser's specifications.
- **REMITTANCE OPTIONS:** For information on paying via credit card, ACH, direct bank transfer, or wire please email us at AR@landscapeforms.com. Please note all credit card charges will be subject to a 3% surcharge. Mail payments to:

USD Checks
Landscape Forms, Inc.
Dept 78073
PO Box 78000
Detroit, MI 48278-0073
USA

CAD Cheques
Landscape Forms, Inc.
PO Box 2408
Station A
Toronto, Ontario M5W 2K6
CAN

Cust #: 66433
SSR: Kathy Murphy
Rep: Central and South Texas Team

Landscape Forms Customer Service

Purchaser | Seller

landscapeforms

PROCUREMENT ANALYSIS

Date: Monday, June 1, 2026
To: Mr. John Cowen Jr., City Mayor
From: Mr. Alan Guard, City Manager
CC: Mr. Damian Espinoza, Procurement Director
Mr. Daniel Leal, Planning and Redevelopment Director

Agenda Title:
Agenda Item for the City Commission meeting of Tuesday, July 21, 2026.
"Consideration and Action to authorize the purchase of Downtown Master Streetscape site furnishings from Landscape Forms, Inc., through OMNIA Contract No. 07-100, in an amount not to exceed $813,339.30 [Planning and Redevelopment Services]."

Executive Summary:

- Department: Planning and Redevelopment Department
- Exemption Type: Cooperative Purchase Exemption
- Cooperative Contract Number: OMNIA No. 07-100
- Vendor: Landscape Forms, Inc.
- Product Subtotal: $731,699.30
- Shipping and Handling: $81,670.00
- Total Purchase Amount: $813,339.30

Background:
The City is planning to purchase site furnishings for the Downtown Master Streetscape project. The proposed purchase includes Poe litter receptacles, recycling-slot shield assemblies, and Plainwell benches. The items will have a coordinated Obsidian powdercoat finish, and the benches will include thermally modified ash inserts and center arms.

Landscape Forms divided the purchase into nine separate quotations based on the quantities and delivery orders.

Procurement Process:
Landscape Forms, Inc. provided nine quotations dated July 1, 2026, identifying OMNIA Contract No. 07-100 as the purchasing vehicle.

The City may use a cooperative purchasing program in accordance with Texas Local Government Code Chapter 271, Subchapter F, provided the City is an eligible participant and the purchase is made through a properly awarded cooperative contract.

Before issuing the purchase order, Procurement should confirm that the cooperative contract remains active, the quoted products are covered by the contract, and the pricing and discounts comply with the contract.

Quote	Order	Description	Product Total	Shipping	Quote Total
0000469992	1	33 Poe litter receptacles	$87,601.14	$9,480.00	$97,081.14
0000470003	2	33 Poe litter receptacles	$87,601.14	$9,470.00	$97,071.14
0000470004	3	33 Poe litter receptacles	$87,601.14	$9,470.00	$97,071.14
0000470005	4	33 Poe litter receptacles	$87,601.14	$9,470.00	$97,071.14
0000470006	5	33 Poe litter receptacles	$87,601.14	$9,470.00	$97,071.14
0000470016	6	20 Poe litter receptacles and 10 recycling-slot shield assemblies	$58,091.60	$8,830.00	$66,921.60
0000470083	1	34 Plainwell benches	$80,094.48	$8,670.00	$88,764.48
0000470088	2	34 Plainwell benches	$80,094.48	$8,660.00	$88,754.48
0000470089	3	32 Plainwell benches	$75,383.04	$8,150.00	$83,533.04
Total			**$731,669.30**	**$81,670.00**	**$813,339.30**

Exemption Justification:
Authorized use of contracts competitively solicited and awarded by another governmental entity or cooperative organization in compliance with Texas Local Government Code §271.102.

Procurement has verified that this contract falls under an interlocal agreement.

Vendor Information:
Vendor Name: Landscape Forms, Inc.
Address: 7800 E. Michigan Avenue, Kalamazoo, MI 49048-9543
Sales Contact: Kathy Murphy / Central and South Texas Team
Phone: 800-521-2546

Exhibits & Supporting Documents:

- Exhibit A – Quotes from Landscape Forms, Inc

Recommendation:
The Procurement Department recommends that the City Commission authorize the purchase of Downtown Master Streetscape site furnishings from Landscape Forms, Inc., through OMNIA Contract No. 07-100, in a total amount not to exceed $813,339.30, inclusive of shipping and handling

Quote

Date: 07/01/2026
LF Quote#: 0000469992
PO#: (end user - City of Brownsville)
Project: City of Brownsville - Downtown Master Streetscape (Master Project) Litters

CORPORATE
7800 E. Michigan Avenue
Kalamazoo, MI 49048-9543
P: 800.521.2546 F: 269.381.3455
www.landscapeforms.com
Federal I.D.# 38-1897577
FSC# PBN-COC-001261

Bill To: City of Brownsville
ATTN: Allan E. Garces
1001 E. Elizabeth St, City Plaza
1st Floor Ste 101
Brownsville, TX 78520

Ship To: City of Brownsville
ATTN: Allan E. Garces
1001 E. Elizabeth St, City Plaza
1st Floor Ste 101
Brownsville, TX 78520

Ship To Contact Phone:956-548-6182
Ship Via: Common Carrier
F.O.B.: Destination

Qty	Description	Unit Price	Total Price
	CONTRACT: OMNIA #07-100		
	* DOCK/FORKLIFT/PALLET JACK REQUIRED TO OFFLOAD *		
	When ordering please confirm:		
	• Shipping address and contact information (name and ph#) • Billing address and contact information • Is your firm or the project tax exempt? If so, exemption certificate must accompany order • Delivery schedule: ___Ship immediately upon completion OR Ship On/After the date:_____		
	* ORDER 1		
33	Poe Litter, Side Opening w/ Slot, 34gal Capacity, w/ Lock, No Signage, Powdercoat Color: Obsidian	$ 2,654.58	$ 87,601.14
1	Aerosol spray touch-up paint - 1 can Obsidian	$ 0.00	$ 0.00

Item Total	$ 87,601.14
Shipping & Handling	$ 9,480.00
Sub Total	$ 97,081.14
Estimated Tax	$ 0.00
Document Total	$ 97,081.14

Payment Terms: Pending-Net30

Landscape Forms, Inc. reserves the right to change payment terms based on payment history as well as information obtained from commercial credit reporting agencies.

Cust #: 66433
SSR: Kathy Murphy
Rep: Central and South Texas Team

Landscape Forms Customer Service

Purchaser | Seller

landscapeforms

Quote

Date: 07/01/2026
LF Quote#: 0000469992
PO#: (end user - City of Brownsville)
Project: City of Brownsville - Downtown Master Streetscape (Master Project) Litters

CORPORATE
7800 E. Michigan Avenue
Kalamazoo, MI 49048-9543
P: 800.521.2546 F: 269.381.3455
www.landscapeforms.com
Federal I.D.# 38-1897577
FSC# PBN-COC-001261

Bill To: City of Brownsville
ATTN: Allan E. Garces
1001 E. Elizabeth St, City Plaza
1st Floor Ste 101
Brownsville, TX 78520

Ship To: City of Brownsville
ATTN: Allan E. Garces
1001 E. Elizabeth St, City Plaza
1st Floor Ste 101
Brownsville, TX 78520

Ship To Contact Phone:956-548-6182
Ship Via: Common Carrier
F.O.B.: Destination

- Purchaser is responsible for confirming options, materials, quantities, etc., for completeness and conformity to plans and specifications.
- Changes to or cancellations of standard product orders may incur a penalty charge of 30% or more.
- Orders including modified or custom product (Specials and/or Studio 431) may not be cancelled. If an order is terminated by the customer, payment in full is expected for the product subtotal regardless of current project status.
- Orders including modified or custom product (Specials, Structure and/or Studio 431) are subject to price increase after engineering/ product development is complete and approved by the customer. Modifications in price will be handled via change order.
- All manufacturing of product, as engineered and/or designed by Landscape Forms, shall be performed exclusively by Landscape Forms or its expressly authorized affiliates or subcontractors. Customer shall not engage any third party for the manufacture of said Product without the prior written consent of Landscape Forms.
- All orders that include a swing product must include an executed liability waiver to be accepted and entered into production.
- Only the Material Supplier Standard Limited Warranty shall apply to all product sold by Landscape Forms. No other warranties or changes to the standard warranty will be applied or accepted.
- No merchandise can be returned without authorization from Landscape Forms. Returns may be subject to a disposition fee of 30-100%.
- Prices based on quantities shown and quantity changes may affect price.
- QUOTED prices are held for 60 days. After receipt of a written ORDER, prices will be held for up to twelve months from receipt of the order. Changes in quantity or specification may affect pricing. Upfit and Scenic pricing will only be held for six months after receipt of a written order.
- Pricing includes selection from our standard color palette. Optional colors and custom color matches are available for an additional fee and will extend lead-time. Please contact our corporate office for more information.
- Fixtures for custom products are the property of Landscape Forms, Inc., and are not available for sale.
- Landscape Forms is a supplier only and ships via common carrier. Customer is responsible for offloading and installing unless otherwise indicated above.
- Handling fees alone will apply on third party and customer pick-up orders.
- Mounting hardware is only available on a limited number of products. Please consult the installation recommendations or contact our corporate office to confirm. In the event hardware is provided, it MUST be used for proper installation.
- Refer to Care and Maintenance guidelines for more detailed information and instructions.
- All orders ship upon completion of fabrication. A one-week grace period may be available, after which storage fees will apply.
- This Agreement contains the entire understanding between the parties. All prior communications are merged into this Agreement. The terms of this Agreement shall control any conflict between documents.
- This Agreement may be signed by the parties separately and by facsimile, and together they shall be deemed one binding, original Agreement.

Cust #: 66433
SSR: Kathy Murphy
Rep: Central and South Texas Team

Landscape Forms Customer Service

Purchaser | Seller

landscapeforms

Quote

Date: 07/01/2026
LF Quote#: 0000469992
PO#: (end user - City of Brownsville)
Project: City of Brownsville - Downtown Master Streetscape (Master Project) Litters

CORPORATE
7800 E. Michigan Avenue
Kalamazoo, MI 49048-9543
P: 800.521.2546 F: 269.381.3455
www.landscapeforms.com
Federal I.D.# 38-1897577
FSC# PBN-COC-001261

Bill To: City of Brownsville
ATTN: Allan E. Garces
1001 E. Elizabeth St, City Plaza
1st Floor Ste 101
Brownsville, TX 78520

Ship To: City of Brownsville
ATTN: Allan E. Garces
1001 E. Elizabeth St, City Plaza
1st Floor Ste 101
Brownsville, TX 78520

Ship To Contact Phone:956-548-6182
Ship Via: Common Carrier
F.O.B.: Destination

- Purchaser shall pay all costs and expenses paid or incurred by Landscape Forms, Inc. in collecting any amounts due for goods purchased by Purchaser, including without limitation, reasonable attorneys' fees and collection costs. Balances on invoices not paid within 30 days of date of invoice, or within an alternate period of time as determined and indicated by Landscape Forms, shall incur interest at a rate of 18% per annum. Cash discounts are not offered.
- The quoted price may include estimated tax, duties and tariffs. Actual tax, duties and tariffs shall be purchaser's responsibility and may be added to an invoice as a separate and additional charge to purchaser unless an acceptable exemption certificate is presented.
- To the extent purchaser supplies or modifies the standard specifications for any products, Landscape Forms, Inc. expressly disclaims all representations and warranties related to such products or their design whether express or implied except that the products shall be manufactured in accordance with purchaser's specifications.
- **REMITTANCE OPTIONS:** For information on paying via credit card, ACH, direct bank transfer, or wire please email us at AR@landscapeforms.com. Please note all credit card charges will be subject to a 3% surcharge. Mail payments to:

USD Checks
Landscape Forms, Inc.
Dept 78073
PO Box 78000
Detroit, MI 48278-0073
USA

CAD Cheques
Landscape Forms, Inc.
PO Box 2408
Station A
Toronto, Ontario M5W 2K6
CAN

Cust #: 66433
SSR: Kathy Murphy
Rep: Central and South Texas Team

Landscape Forms Customer Service

Purchaser | Seller

landscapeforms

Quote

Date: 07/01/2026
LF Quote#: 0000470003
PO#: (end user - City of Brownsville)
Project: City of Brownsville - Downtown Master Streetscape (Master Project) Litters

CORPORATE
7800 E. Michigan Avenue
Kalamazoo, MI 49048-9543
P: 800.521.2546 F: 269.381.3455
www.landscapeforms.com
Federal I.D.# 38-1897577
FSC# PBN-COC-001261

Bill To: City of Brownsville
ATTN: Allan E. Garces
1001 E. Elizabeth St, City Plaza
1st Floor Ste 101
Brownsville, TX 78520

Ship To: City of Brownsville
ATTN: Allan E. Garces
1001 E. Elizabeth St, City Plaza
1st Floor Ste 101
Brownsville, TX 78520

Ship To Contact Phone:956-548-6182
Ship Via: Common Carrier
F.O.B.: Destination

Qty	Description	Unit Price	Total Price
	CONTRACT: OMNIA #07-100		
	* DOCK/FORKLIFT/PALLET JACK REQUIRED TO OFFLOAD *		

When ordering please confirm:

- Shipping address and contact information (name and ph#)
- Billing address and contact information
- Is your firm or the project tax exempt? If so, exemption certificate must accompany order
- Delivery schedule:

___Ship immediately upon completion
OR Ship On/After the date:_____

	* ORDER 2		
33	Poe Litter, Side Opening w/ Slot, 34gal Capacity, w/ Lock, No Signage, Powdercoat Color: Obsidian	$ 2,654.58	$ 87,601.14

Item Total	$ 87,601.14
Shipping & Handling	$ 9,470.00
Sub Total	$ 97,071.14
Estimated Tax	$ 0.00
Document Total	$ 97,071.14

Payment Terms: Pending-Net30

Landscape Forms, Inc. reserves the right to change payment terms based on payment history as well as information obtained from commercial credit reporting agencies.

Cust #: 66433
SSR: Kathy Murphy
Rep: Central and South Texas Team

Landscape Forms Customer Service

Purchaser | Seller

landscapeforms

Quote

Date: 07/01/2026
LF Quote#: 0000470003
PO#: (end user - City of Brownsville)
Project: City of Brownsville - Downtown Master Streetscape (Master Project) Litters

CORPORATE
7800 E. Michigan Avenue
Kalamazoo, MI 49048-9543
P: 800.521.2546 F: 269.381.3455
www.landscapeforms.com
Federal I.D.# 38-1897577
FSC# PBN-COC-001261

Bill To: City of Brownsville
ATTN: Allan E. Garces
1001 E. Elizabeth St, City Plaza
1st Floor Ste 101
Brownsville, TX 78520

Ship To: City of Brownsville
ATTN: Allan E. Garces
1001 E. Elizabeth St, City Plaza
1st Floor Ste 101
Brownsville, TX 78520

Ship To Contact Phone:956-548-6182
Ship Via: Common Carrier
F.O.B.: Destination

- Purchaser is responsible for confirming options, materials, quantities, etc., for completeness and conformity to plans and specifications.
- Changes to or cancellations of standard product orders may incur a penalty charge of 30% or more.
- Orders including modified or custom product (Specials and/or Studio 431) may not be cancelled. If an order is terminated by the customer, payment in full is expected for the product subtotal regardless of current project status.
- Orders including modified or custom product (Specials, Structure and/or Studio 431) are subject to price increase after engineering/ product development is complete and approved by the customer. Modifications in price will be handled via change order.
- All manufacturing of product, as engineered and/or designed by Landscape Forms, shall be performed exclusively by Landscape Forms or its expressly authorized affiliates or subcontractors. Customer shall not engage any third party for the manufacture of said Product without the prior written consent of Landscape Forms.
- All orders that include a swing product must include an executed liability waiver to be accepted and entered into production.
- Only the Material Supplier Standard Limited Warranty shall apply to all product sold by Landscape Forms. No other warranties or changes to the standard warranty will be applied or accepted.
- No merchandise can be returned without authorization from Landscape Forms. Returns may be subject to a disposition fee of 30-100%.
- Prices based on quantities shown and quantity changes may affect price.
- QUOTED prices are held for 60 days. After receipt of a written ORDER, prices will be held for up to twelve months from receipt of the order. Changes in quantity or specification may affect pricing. Upfit and Scenic pricing will only be held for six months after receipt of a written order.
- Pricing includes selection from our standard color palette. Optional colors and custom color matches are available for an additional fee and will extend lead-time. Please contact our corporate office for more information.
- Fixtures for custom products are the property of Landscape Forms, Inc., and are not available for sale.
- Landscape Forms is a supplier only and ships via common carrier. Customer is responsible for offloading and installing unless otherwise indicated above.
- Handling fees alone will apply on third party and customer pick-up orders.
- Mounting hardware is only available on a limited number of products. Please consult the installation recommendations or contact our corporate office to confirm. In the event hardware is provided, it MUST be used for proper installation.
- Refer to Care and Maintenance guidelines for more detailed information and instructions.
- All orders ship upon completion of fabrication. A one-week grace period may be available, after which storage fees will apply.
- This Agreement contains the entire understanding between the parties. All prior communications are merged into this Agreement. The terms of this Agreement shall control any conflict between documents.
- This Agreement may be signed by the parties separately and by facsimile, and together they shall be deemed one binding, original Agreement.

Cust #: 66433
SSR: Kathy Murphy
Rep: Central and South Texas Team

Landscape Forms Customer Service

Purchaser | Seller

Quote

Date: 07/01/2026
LF Quote#: 0000470003
PO#: (end user - City of Brownsville)
Project: City of Brownsville - Downtown Master Streetscape (Master Project) Litters

CORPORATE
7800 E. Michigan Avenue
Kalamazoo, MI 49048-9543
P: 800.521.2546 F: 269.381.3455
www.landscapeforms.com
Federal I.D.# 38-1897577
FSC# PBN-COC-001261

Bill To: City of Brownsville
ATTN: Allan E. Garces
1001 E. Elizabeth St, City Plaza
1st Floor Ste 101
Brownsville, TX 78520

Ship To: City of Brownsville
ATTN: Allan E. Garces
1001 E. Elizabeth St, City Plaza
1st Floor Ste 101
Brownsville, TX 78520

Ship To Contact Phone:956-548-6182
Ship Via: Common Carrier
F.O.B.: Destination

- Purchaser shall pay all costs and expenses paid or incurred by Landscape Forms, Inc. in collecting any amounts due for goods purchased by Purchaser, including without limitation, reasonable attorneys' fees and collection costs. Balances on invoices not paid within 30 days of date of invoice, or within an alternate period of time as determined and indicated by Landscape Forms, shall incur interest at a rate of 18% per annum. Cash discounts are not offered.
- The quoted price may include estimated tax, duties and tariffs. Actual tax, duties and tariffs shall be purchaser's responsibility and may be added to an invoice as a separate and additional charge to purchaser unless an acceptable exemption certificate is presented.
- To the extent purchaser supplies or modifies the standard specifications for any products, Landscape Forms, Inc. expressly disclaims all representations and warranties related to such products or their design whether express or implied except that the products shall be manufactured in accordance with purchaser's specifications.
- **REMITTANCE OPTIONS:** For information on paying via credit card, ACH, direct bank transfer, or wire please email us at AR@landscapeforms.com. Please note all credit card charges will be subject to a 3% surcharge. Mail payments to:

USD Checks
Landscape Forms, Inc.
Dept 78073
PO Box 78000
Detroit, MI 48278-0073
USA

CAD Cheques
Landscape Forms, Inc.
PO Box 2408
Station A
Toronto, Ontario M5W 2K6
CAN

Cust #: 66433
SSR: Kathy Murphy
Rep: Central and South Texas Team

Landscape Forms Customer Service

Purchaser | Seller

landscapeforms

Quote

Date: 07/01/2026
LF Quote#: 0000470004
PO#: (end user - City of Brownsville)
Project: City of Brownsville - Downtown Master Streetscape (Master Project) Litters

CORPORATE
7800 E. Michigan Avenue
Kalamazoo, MI 49048-9543
P: 800.521.2546 F: 269.381.3455
www.landscapeforms.com
Federal I.D.# 38-1897577
FSC# PBN-COC-001261

Bill To: City of Brownsville
ATTN: Allan E. Garces
1001 E. Elizabeth St, City Plaza
1st Floor Ste 101
Brownsville, TX 78520

Ship To: City of Brownsville
ATTN: Allan E. Garces
1001 E. Elizabeth St, City Plaza
1st Floor Ste 101
Brownsville, TX 78520

Ship To Contact Phone:956-548-6182
Ship Via: Common Carrier
F.O.B.: Destination

Qty	Description	Unit Price	Total Price
	CONTRACT: OMNIA #07-100		
	* DOCK/FORKLIFT/PALLET JACK REQUIRED TO OFFLOAD *		
	When ordering please confirm:		
	• Shipping address and contact information (name and ph#) • Billing address and contact information • Is your firm or the project tax exempt? If so, exemption certificate must accompany order • Delivery schedule: ___Ship immediately upon completion OR Ship On/After the date:_____		
	* ORDER 3		
33	Poe Litter, Side Opening w/ Slot, 34gal Capacity, w/ Lock, No Signage, Powdercoat Color: Obsidian	$ 2,654.58	$ 87,601.14

Item Total	$ 87,601.14
Shipping & Handling	$ 9,470.00
Sub Total	$ 97,071.14
Estimated Tax	$ 0.00
Document Total	$ 97,071.14

Payment Terms: Pending-Net30

Landscape Forms, Inc. reserves the right to change payment terms based on payment history as well as information obtained from commercial credit reporting agencies.

Cust #: 66433
SSR: Kathy Murphy
Rep: Central and South Texas Team

Landscape Forms Customer Service

Purchaser | Seller

landscapeforms

Quote

Date: 07/01/2026
LF Quote#: 0000470004
PO#: (end user - City of Brownsville)
Project: City of Brownsville - Downtown Master Streetscape (Master Project) Litters

CORPORATE
7800 E. Michigan Avenue
Kalamazoo, MI 49048-9543
P: 800.521.2546 F: 269.381.3455
www.landscapeforms.com
Federal I.D.# 38-1897577
FSC# PBN-COC-001261

Bill To: City of Brownsville
ATTN: Allan E. Garces
1001 E. Elizabeth St, City Plaza
1st Floor Ste 101
Brownsville, TX 78520

Ship To: City of Brownsville
ATTN: Allan E. Garces
1001 E. Elizabeth St, City Plaza
1st Floor Ste 101
Brownsville, TX 78520

Ship To Contact Phone:956-548-6182
Ship Via: Common Carrier
F.O.B.: Destination

- Purchaser is responsible for confirming options, materials, quantities, etc., for completeness and conformity to plans and specifications.
- Changes to or cancellations of standard product orders may incur a penalty charge of 30% or more.
- Orders including modified or custom product (Specials and/or Studio 431) may not be cancelled. If an order is terminated by the customer, payment in full is expected for the product subtotal regardless of current project status.
- Orders including modified or custom product (Specials, Structure and/or Studio 431) are subject to price increase after engineering/ product development is complete and approved by the customer. Modifications in price will be handled via change order.
- All manufacturing of product, as engineered and/or designed by Landscape Forms, shall be performed exclusively by Landscape Forms or its expressly authorized affiliates or subcontractors. Customer shall not engage any third party for the manufacture of said Product without the prior written consent of Landscape Forms.
- All orders that include a swing product must include an executed liability waiver to be accepted and entered into production.
- Only the Material Supplier Standard Limited Warranty shall apply to all product sold by Landscape Forms. No other warranties or changes to the standard warranty will be applied or accepted.
- No merchandise can be returned without authorization from Landscape Forms. Returns may be subject to a disposition fee of 30-100%.
- Prices based on quantities shown and quantity changes may affect price.
- QUOTED prices are held for 60 days. After receipt of a written ORDER, prices will be held for up to twelve months from receipt of the order. Changes in quantity or specification may affect pricing. Upfit and Scenic pricing will only be held for six months after receipt of a written order.
- Pricing includes selection from our standard color palette. Optional colors and custom color matches are available for an additional fee and will extend lead-time. Please contact our corporate office for more information.
- Fixtures for custom products are the property of Landscape Forms, Inc., and are not available for sale.
- Landscape Forms is a supplier only and ships via common carrier. Customer is responsible for offloading and installing unless otherwise indicated above.
- Handling fees alone will apply on third party and customer pick-up orders.
- Mounting hardware is only available on a limited number of products. Please consult the installation recommendations or contact our corporate office to confirm. In the event hardware is provided, it MUST be used for proper installation.
- Refer to Care and Maintenance guidelines for more detailed information and instructions.
- All orders ship upon completion of fabrication. A one-week grace period may be available, after which storage fees will apply.
- This Agreement contains the entire understanding between the parties. All prior communications are merged into this Agreement. The terms of this Agreement shall control any conflict between documents.
- This Agreement may be signed by the parties separately and by facsimile, and together they shall be deemed one binding, original Agreement.

Cust #: 66433
SSR: Kathy Murphy
Rep: Central and South Texas Team

Landscape Forms Customer Service

Purchaser | Seller

Quote

Date: 07/01/2026
LF Quote#: 0000470004
PO#: (end user - City of Brownsville)
Project: City of Brownsville - Downtown Master Streetscape (Master Project) Litters

CORPORATE
7800 E. Michigan Avenue
Kalamazoo, MI 49048-9543
P: 800.521.2546 F: 269.381.3455
www.landscapeforms.com
Federal I.D.# 38-1897577
FSC# PBN-COC-001261

Bill To: City of Brownsville
ATTN: Allan E. Garces
1001 E. Elizabeth St, City Plaza
1st Floor Ste 101
Brownsville, TX 78520

Ship To: City of Brownsville
ATTN: Allan E. Garces
1001 E. Elizabeth St, City Plaza
1st Floor Ste 101
Brownsville, TX 78520

Ship To Contact Phone:956-548-6182
Ship Via: Common Carrier
F.O.B.: Destination

- Purchaser shall pay all costs and expenses paid or incurred by Landscape Forms, Inc. in collecting any amounts due for goods purchased by Purchaser, including without limitation, reasonable attorneys' fees and collection costs. Balances on invoices not paid within 30 days of date of invoice, or within an alternate period of time as determined and indicated by Landscape Forms, shall incur interest at a rate of 18% per annum. Cash discounts are not offered.
- The quoted price may include estimated tax, duties and tariffs. Actual tax, duties and tariffs shall be purchaser's responsibility and may be added to an invoice as a separate and additional charge to purchaser unless an acceptable exemption certificate is presented.
- To the extent purchaser supplies or modifies the standard specifications for any products, Landscape Forms, Inc. expressly disclaims all representations and warranties related to such products or their design whether express or implied except that the products shall be manufactured in accordance with purchaser's specifications.
- **REMITTANCE OPTIONS:** For information on paying via credit card, ACH, direct bank transfer, or wire please email us at AR@landscapeforms.com. Please note all credit card charges will be subject to a 3% surcharge. Mail payments to:

USD Checks
Landscape Forms, Inc.
Dept 78073
PO Box 78000
Detroit, MI 48278-0073
USA

CAD Cheques
Landscape Forms, Inc.
PO Box 2408
Station A
Toronto, Ontario M5W 2K6
CAN

Cust #: 66433
SSR: Kathy Murphy
Rep: Central and South Texas Team

Landscape Forms Customer Service

Purchaser | Seller

landscapeforms

Quote

Date: 07/01/2026
LF Quote#: 0000470005
PO#: (end user - City of Brownsville)
Project: City of Brownsville - Downtown Master Streetscape (Master Project) Litters

CORPORATE
7800 E. Michigan Avenue
Kalamazoo, MI 49048-9543
P: 800.521.2546 F: 269.381.3455
www.landscapeforms.com
Federal I.D.# 38-1897577
FSC# PBN-COC-001261

Bill To: City of Brownsville
ATTN: Allan E. Garces
1001 E. Elizabeth St, City Plaza
1st Floor Ste 101
Brownsville, TX 78520

Ship To: City of Brownsville
ATTN: Allan E. Garces
1001 E. Elizabeth St, City Plaza
1st Floor Ste 101
Brownsville, TX 78520

Ship To Contact Phone:956-548-6182
Ship Via: Common Carrier
F.O.B.: Destination

Qty	Description	Unit Price	Total Price
	CONTRACT: OMNIA #07-100		
	* DOCK/FORKLIFT/PALLET JACK REQUIRED TO OFFLOAD *		

When ordering please confirm:

- Shipping address and contact information (name and ph#)
- Billing address and contact information
- Is your firm or the project tax exempt? If so, exemption certificate must accompany order
- Delivery schedule:

___Ship immediately upon completion
OR Ship On/After the date:_____

	* ORDER 4		
33	Poe Litter, Side Opening w/ Slot, 34gal Capacity, w/ Lock, No Signage, Powdercoat Color: Obsidian	$ 2,654.58	$ 87,601.14

Item Total	$ 87,601.14
Shipping & Handling	$ 9,470.00
Sub Total	$ 97,071.14
Estimated Tax	$ 0.00
Document Total	$ 97,071.14

Payment Terms: Pending-Net30

Landscape Forms, Inc. reserves the right to change payment terms based on payment history as well as information obtained from commercial credit reporting agencies.

Cust #: 66433
SSR: Kathy Murphy
Rep: Central and South Texas Team

Landscape Forms Customer Service

Purchaser | Seller

landscapeforms

Quote

Date: 07/01/2026
LF Quote#: 0000470005
PO#: (end user - City of Brownsville)
Project: City of Brownsville - Downtown Master Streetscape (Master Project) Litters

CORPORATE
7800 E. Michigan Avenue
Kalamazoo, MI 49048-9543
P: 800.521.2546 F: 269.381.3455
www.landscapeforms.com
Federal I.D.# 38-1897577
FSC# PBN-COC-001261

Bill To: City of Brownsville
ATTN: Allan E. Garces
1001 E. Elizabeth St, City Plaza
1st Floor Ste 101
Brownsville, TX 78520

Ship To: City of Brownsville
ATTN: Allan E. Garces
1001 E. Elizabeth St, City Plaza
1st Floor Ste 101
Brownsville, TX 78520

Ship To Contact Phone:956-548-6182
Ship Via: Common Carrier
F.O.B.: Destination

- Purchaser is responsible for confirming options, materials, quantities, etc., for completeness and conformity to plans and specifications.
- Changes to or cancellations of standard product orders may incur a penalty charge of 30% or more.
- Orders including modified or custom product (Specials and/or Studio 431) may not be cancelled. If an order is terminated by the customer, payment in full is expected for the product subtotal regardless of current project status.
- Orders including modified or custom product (Specials, Structure and/or Studio 431) are subject to price increase after engineering/ product development is complete and approved by the customer. Modifications in price will be handled via change order.
- All manufacturing of product, as engineered and/or designed by Landscape Forms, shall be performed exclusively by Landscape Forms or its expressly authorized affiliates or subcontractors. Customer shall not engage any third party for the manufacture of said Product without the prior written consent of Landscape Forms.
- All orders that include a swing product must include an executed liability waiver to be accepted and entered into production.
- Only the Material Supplier Standard Limited Warranty shall apply to all product sold by Landscape Forms. No other warranties or changes to the standard warranty will be applied or accepted.
- No merchandise can be returned without authorization from Landscape Forms. Returns may be subject to a disposition fee of 30-100%.
- Prices based on quantities shown and quantity changes may affect price.
- QUOTED prices are held for 60 days. After receipt of a written ORDER, prices will be held for up to twelve months from receipt of the order. Changes in quantity or specification may affect pricing. Upfit and Scenic pricing will only be held for six months after receipt of a written order.
- Pricing includes selection from our standard color palette. Optional colors and custom color matches are available for an additional fee and will extend lead-time. Please contact our corporate office for more information.
- Fixtures for custom products are the property of Landscape Forms, Inc., and are not available for sale.
- Landscape Forms is a supplier only and ships via common carrier. Customer is responsible for offloading and installing unless otherwise indicated above.
- Handling fees alone will apply on third party and customer pick-up orders.
- Mounting hardware is only available on a limited number of products. Please consult the installation recommendations or contact our corporate office to confirm. In the event hardware is provided, it MUST be used for proper installation.
- Refer to Care and Maintenance guidelines for more detailed information and instructions.
- All orders ship upon completion of fabrication. A one-week grace period may be available, after which storage fees will apply.
- This Agreement contains the entire understanding between the parties. All prior communications are merged into this Agreement. The terms of this Agreement shall control any conflict between documents.
- This Agreement may be signed by the parties separately and by facsimile, and together they shall be deemed one binding, original Agreement.

Cust #: 66433
SSR: Kathy Murphy
Rep: Central and South Texas Team

Landscape Forms Customer Service

Purchaser | Seller

Quote

Date: 07/01/2026
LF Quote#: 0000470005
PO#: (end user - City of Brownsville)
Project: City of Brownsville - Downtown Master Streetscape (Master Project) Litters

CORPORATE
7800 E. Michigan Avenue
Kalamazoo, MI 49048-9543
P: 800.521.2546 F: 269.381.3455
www.landscapeforms.com
Federal I.D.# 38-1897577
FSC# PBN-COC-001261

Bill To: City of Brownsville
ATTN: Allan E. Garces
1001 E. Elizabeth St, City Plaza
1st Floor Ste 101
Brownsville, TX 78520

Ship To: City of Brownsville
ATTN: Allan E. Garces
1001 E. Elizabeth St, City Plaza
1st Floor Ste 101
Brownsville, TX 78520

Ship To Contact Phone:956-548-6182
Ship Via: Common Carrier
F.O.B.: Destination

- Purchaser shall pay all costs and expenses paid or incurred by Landscape Forms, Inc. in collecting any amounts due for goods purchased by Purchaser, including without limitation, reasonable attorneys' fees and collection costs. Balances on invoices not paid within 30 days of date of invoice, or within an alternate period of time as determined and indicated by Landscape Forms, shall incur interest at a rate of 18% per annum. Cash discounts are not offered.
- The quoted price may include estimated tax, duties and tariffs. Actual tax, duties and tariffs shall be purchaser's responsibility and may be added to an invoice as a separate and additional charge to purchaser unless an acceptable exemption certificate is presented.
- To the extent purchaser supplies or modifies the standard specifications for any products, Landscape Forms, Inc. expressly disclaims all representations and warranties related to such products or their design whether express or implied except that the products shall be manufactured in accordance with purchaser's specifications.
- **REMITTANCE OPTIONS:** For information on paying via credit card, ACH, direct bank transfer, or wire please email us at AR@landscapeforms.com. Please note all credit card charges will be subject to a 3% surcharge. Mail payments to:

USD Checks
Landscape Forms, Inc.
Dept 78073
PO Box 78000
Detroit, MI 48278-0073
USA

CAD Cheques
Landscape Forms, Inc.
PO Box 2408
Station A
Toronto, Ontario M5W 2K6
CAN

Cust #: 66433
SSR: Kathy Murphy
Rep: Central and South Texas Team

Landscape Forms Customer Service

Purchaser | Seller

landscapeforms

Quote

Date: 07/01/2026
LF Quote#: 0000470006
PO#: (end user - City of Brownsville)
Project: City of Brownsville - Downtown Master Streetscape (Master Project) Litters

CORPORATE
7800 E. Michigan Avenue
Kalamazoo, MI 49048-9543
P: 800.521.2546 F: 269.381.3455
www.landscapeforms.com
Federal I.D.# 38-1897577
FSC# PBN-COC-001261

Bill To: City of Brownsville
ATTN: Allan E. Garces
1001 E. Elizabeth St, City Plaza
1st Floor Ste 101
Brownsville, TX 78520

Ship To: City of Brownsville
ATTN: Allan E. Garces
1001 E. Elizabeth St, City Plaza
1st Floor Ste 101
Brownsville, TX 78520

Ship To Contact Phone:956-548-6182
Ship Via: Common Carrier
F.O.B.: Destination

Qty	Description	Unit Price	Total Price
	CONTRACT: OMNIA #07-100		
	* DOCK/FORKLIFT/PALLET JACK REQUIRED TO OFFLOAD *		

When ordering please confirm:

- Shipping address and contact information (name and ph#)
- Billing address and contact information
- Is your firm or the project tax exempt? If so, exemption certificate must accompany order
- Delivery schedule:

___Ship immediately upon completion
OR Ship On/After the date:_____

	* ORDER 5		
33	Poe Litter, Side Opening w/ Slot, 34gal Capacity, w/ Lock, No Signage, Powdercoat Color: Obsidian	$ 2,654.58	$ 87,601.14

Item Total	$ 87,601.14
Shipping & Handling	$ 9,470.00
Sub Total	$ 97,071.14
Estimated Tax	$ 0.00
Document Total	$ 97,071.14

Payment Terms: Pending-Net30

Landscape Forms, Inc. reserves the right to change payment terms based on payment history as well as information obtained from commercial credit reporting agencies.

Cust #: 66433
SSR: Kathy Murphy
Rep: Central and South Texas Team

Landscape Forms Customer Service

Purchaser | Seller

landscapeforms

Quote

Date: 07/01/2026
LF Quote#: 0000470006
PO#: (end user - City of Brownsville)
Project: City of Brownsville - Downtown Master Streetscape (Master Project) Litters

CORPORATE
7800 E. Michigan Avenue
Kalamazoo, MI 49048-9543
P: 800.521.2546 F: 269.381.3455
www.landscapeforms.com
Federal I.D.# 38-1897577
FSC# PBN-COC-001261

Bill To: City of Brownsville
ATTN: Allan E. Garces
1001 E. Elizabeth St, City Plaza
1st Floor Ste 101
Brownsville, TX 78520

Ship To: City of Brownsville
ATTN: Allan E. Garces
1001 E. Elizabeth St, City Plaza
1st Floor Ste 101
Brownsville, TX 78520

Ship To Contact Phone:956-548-6182
Ship Via: Common Carrier
F.O.B.: Destination

- Purchaser is responsible for confirming options, materials, quantities, etc., for completeness and conformity to plans and specifications.
- Changes to or cancellations of standard product orders may incur a penalty charge of 30% or more.
- Orders including modified or custom product (Specials and/or Studio 431) may not be cancelled. If an order is terminated by the customer, payment in full is expected for the product subtotal regardless of current project status.
- Orders including modified or custom product (Specials, Structure and/or Studio 431) are subject to price increase after engineering/ product development is complete and approved by the customer. Modifications in price will be handled via change order.
- All manufacturing of product, as engineered and/or designed by Landscape Forms, shall be performed exclusively by Landscape Forms or its expressly authorized affiliates or subcontractors. Customer shall not engage any third party for the manufacture of said Product without the prior written consent of Landscape Forms.
- All orders that include a swing product must include an executed liability waiver to be accepted and entered into production.
- Only the Material Supplier Standard Limited Warranty shall apply to all product sold by Landscape Forms. No other warranties or changes to the standard warranty will be applied or accepted.
- No merchandise can be returned without authorization from Landscape Forms. Returns may be subject to a disposition fee of 30-100%.
- Prices based on quantities shown and quantity changes may affect price.
- QUOTED prices are held for 60 days. After receipt of a written ORDER, prices will be held for up to twelve months from receipt of the order. Changes in quantity or specification may affect pricing. Upfit and Scenic pricing will only be held for six months after receipt of a written order.
- Pricing includes selection from our standard color palette. Optional colors and custom color matches are available for an additional fee and will extend lead-time. Please contact our corporate office for more information.
- Fixtures for custom products are the property of Landscape Forms, Inc., and are not available for sale.
- Landscape Forms is a supplier only and ships via common carrier. Customer is responsible for offloading and installing unless otherwise indicated above.
- Handling fees alone will apply on third party and customer pick-up orders.
- Mounting hardware is only available on a limited number of products. Please consult the installation recommendations or contact our corporate office to confirm. In the event hardware is provided, it MUST be used for proper installation.
- Refer to Care and Maintenance guidelines for more detailed information and instructions.
- All orders ship upon completion of fabrication. A one-week grace period may be available, after which storage fees will apply.
- This Agreement contains the entire understanding between the parties. All prior communications are merged into this Agreement. The terms of this Agreement shall control any conflict between documents.
- This Agreement may be signed by the parties separately and by facsimile, and together they shall be deemed one binding, original Agreement.

Cust #: 66433
SSR: Kathy Murphy
Rep: Central and South Texas Team

Landscape Forms Customer Service

Purchaser | Seller

Quote

Date: 07/01/2026
LF Quote#: 0000470006
PO#: (end user - City of Brownsville)
Project: City of Brownsville - Downtown Master Streetscape (Master Project) Litters

CORPORATE
7800 E. Michigan Avenue
Kalamazoo, MI 49048-9543
P: 800.521.2546 F: 269.381.3455
www.landscapeforms.com
Federal I.D.# 38-1897577
FSC# PBN-COC-001261

Bill To: City of Brownsville
ATTN: Allan E. Garces
1001 E. Elizabeth St, City Plaza
1st Floor Ste 101
Brownsville, TX 78520

Ship To: City of Brownsville
ATTN: Allan E. Garces
1001 E. Elizabeth St, City Plaza
1st Floor Ste 101
Brownsville, TX 78520

Ship To Contact Phone:956-548-6182
Ship Via: Common Carrier
F.O.B.: Destination

- Purchaser shall pay all costs and expenses paid or incurred by Landscape Forms, Inc. in collecting any amounts due for goods purchased by Purchaser, including without limitation, reasonable attorneys' fees and collection costs. Balances on invoices not paid within 30 days of date of invoice, or within an alternate period of time as determined and indicated by Landscape Forms, shall incur interest at a rate of 18% per annum. Cash discounts are not offered.
- The quoted price may include estimated tax, duties and tariffs. Actual tax, duties and tariffs shall be purchaser's responsibility and may be added to an invoice as a separate and additional charge to purchaser unless an acceptable exemption certificate is presented.
- To the extent purchaser supplies or modifies the standard specifications for any products, Landscape Forms, Inc. expressly disclaims all representations and warranties related to such products or their design whether express or implied except that the products shall be manufactured in accordance with purchaser's specifications.
- **REMITTANCE OPTIONS:** For information on paying via credit card, ACH, direct bank transfer, or wire please email us at AR@landscapeforms.com. Please note all credit card charges will be subject to a 3% surcharge. Mail payments to:

USD Checks
Landscape Forms, Inc.
Dept 78073
PO Box 78000
Detroit, MI 48278-0073
USA

CAD Cheques
Landscape Forms, Inc.
PO Box 2408
Station A
Toronto, Ontario M5W 2K6
CAN

Cust #: 66433
SSR: Kathy Murphy
Rep: Central and South Texas Team

Landscape Forms Customer Service

Purchaser | Seller

Quote

Date: 07/01/2026
LF Quote#: 0000470016
PO#: (end user - City of Brownsville)
Project: City of Brownsville - Downtown Master Streetscape (Master Project) Litters

CORPORATE
7800 E. Michigan Avenue
Kalamazoo, MI 49048-9543
P: 800.521.2546 F: 269.381.3455
www.landscapeforms.com
Federal I.D.# 38-1897577
FSC# PBN-COC-001261

Bill To: City of Brownsville
ATTN: Allan E. Garces
1001 E. Elizabeth St, City Plaza
1st Floor Ste 101
Brownsville, TX 78520

Ship To: City of Brownsville
ATTN: Allan E. Garces
1001 E. Elizabeth St, City Plaza
1st Floor Ste 101
Brownsville, TX 78520

Ship To Contact Phone:956-548-6182
Ship Via: Common Carrier
F.O.B.: Destination

Qty	Description	Unit Price	Total Price
	CONTRACT: OMNIA #07-100		
	* DOCK/FORKLIFT/PALLET JACK REQUIRED TO OFFLOAD *		
	When ordering please confirm: • Shipping address and contact information (name and ph#) • Billing address and contact information • Is your firm or the project tax exempt? If so, exemption certificate must accompany order • Delivery schedule: ___Ship immediately upon completion OR Ship On/After the date:_____		
	* ORDER 6		
20	Poe Litter, Side Opening w/ Slot, 34gal Capacity, w/ Lock, No Signage, Powdercoat Color: Obsidian	$ 2,654.58	$ 53,091.60
10	Poe litter side opening litter shield assembly ONLY. Opening style: Recycling slot. Includes attaching screws. Powdercoat color: Obsidian	$ 500.00	$ 5,000.00
	**ATTIC STOCK OF SLOT INSERTS. NO LONGER AVAILABLE AFTER 7/30/2026		

Item Total	$ 58,091.60
Shipping & Handling	$ 8,830.00
Sub Total	$ 66,921.60
Estimated Tax	$ 0.00
Document Total	$ 66,921.60

Payment Terms: Pending-Net30

Cust #: 66433
SSR: Kathy Murphy
Rep: Central and South Texas Team

Landscape Forms Customer Service

Purchaser | Seller

landscapeforms

Quote

Date: 07/01/2026
LF Quote#: 0000470016
PO#: (end user - City of Brownsville)
Project: City of Brownsville - Downtown Master Streetscape (Master Project) Litters

CORPORATE
7800 E. Michigan Avenue
Kalamazoo, MI 49048-9543
P: 800.521.2546 F: 269.381.3455
www.landscapeforms.com
Federal I.D.# 38-1897577
FSC# PBN-COC-001261

Bill To: City of Brownsville
ATTN: Allan E. Garces
1001 E. Elizabeth St, City Plaza
1st Floor Ste 101
Brownsville, TX 78520

Ship To: City of Brownsville
ATTN: Allan E. Garces
1001 E. Elizabeth St, City Plaza
1st Floor Ste 101
Brownsville, TX 78520

Ship To Contact Phone:956-548-6182
Ship Via: Common Carrier
F.O.B.: Destination

Landscape Forms, Inc. reserves the right to change payment terms based on payment history as well as information obtained from commercial credit reporting agencies.

- Purchaser is responsible for confirming options, materials, quantities, etc., for completeness and conformity to plans and specifications.
- Changes to or cancellations of standard product orders may incur a penalty charge of 30% or more.
- Orders including modified or custom product (Specials and/or Studio 431) may not be cancelled. If an order is terminated by the customer, payment in full is expected for the product subtotal regardless of current project status.
- Orders including modified or custom product (Specials, Structure and/or Studio 431) are subject to price increase after engineering/ product development is complete and approved by the customer. Modifications in price will be handled via change order.
- All manufacturing of product, as engineered and/or designed by Landscape Forms, shall be performed exclusively by Landscape Forms or its expressly authorized affiliates or subcontractors. Customer shall not engage any third party for the manufacture of said Product without the prior written consent of Landscape Forms.
- All orders that include a swing product must include an executed liability waiver to be accepted and entered into production.
- Only the Material Supplier Standard Limited Warranty shall apply to all product sold by Landscape Forms. No other warranties or changes to the standard warranty will be applied or accepted.
- No merchandise can be returned without authorization from Landscape Forms. Returns may be subject to a disposition fee of 30-100%.
- Prices based on quantities shown and quantity changes may affect price.
- QUOTED prices are held for 60 days. After receipt of a written ORDER, prices will be held for up to twelve months from receipt of the order. Changes in quantity or specification may affect pricing. Upfit and Scenic pricing will only be held for six months after receipt of a written order.
- Pricing includes selection from our standard color palette. Optional colors and custom color matches are available for an additional fee and will extend lead-time. Please contact our corporate office for more information.
- Fixtures for custom products are the property of Landscape Forms, Inc., and are not available for sale.
- Landscape Forms is a supplier only and ships via common carrier. Customer is responsible for offloading and installing unless otherwise indicated above.
- Handling fees alone will apply on third party and customer pick-up orders.
- Mounting hardware is only available on a limited number of products. Please consult the installation recommendations or contact our corporate office to confirm. In the event hardware is provided, it MUST be used for proper installation.
- Refer to Care and Maintenance guidelines for more detailed information and instructions.
- All orders ship upon completion of fabrication. A one-week grace period may be available, after which storage fees will apply.
- This Agreement contains the entire understanding between the parties. All prior communications are merged into this Agreement. The terms of this Agreement shall control any conflict between documents.

Cust #: 66433
SSR: Kathy Murphy
Rep: Central and South Texas Team

Landscape Forms Customer Service

Purchaser | Seller

landscapeforms

Quote

Date: 07/01/2026
LF Quote#: 0000470016
PO#: (end user - City of Brownsville)
Project: City of Brownsville - Downtown Master Streetscape (Master Project) Litters

CORPORATE
7800 E. Michigan Avenue
Kalamazoo, MI 49048-9543
P: 800.521.2546 F: 269.381.3455
www.landscapeforms.com
Federal I.D.# 38-1897577
FSC# PBN-COC-001261

Bill To: City of Brownsville
ATTN: Allan E. Garces
1001 E. Elizabeth St, City Plaza
1st Floor Ste 101
Brownsville, TX 78520

Ship To: City of Brownsville
ATTN: Allan E. Garces
1001 E. Elizabeth St, City Plaza
1st Floor Ste 101
Brownsville, TX 78520

Ship To Contact Phone:956-548-6182
Ship Via: Common Carrier
F.O.B.: Destination

- This Agreement may be signed by the parties separately and by facsimile, and together they shall be deemed one binding, original Agreement.
- Purchaser shall pay all costs and expenses paid or incurred by Landscape Forms, Inc. in collecting any amounts due for goods purchased by Purchaser, including without limitation, reasonable attorneys' fees and collection costs. Balances on invoices not paid within 30 days of date of invoice, or within an alternate period of time as determined and indicated by Landscape Forms, shall incur interest at a rate of 18% per annum. Cash discounts are not offered.
- The quoted price may include estimated tax, duties and tariffs. Actual tax, duties and tariffs shall be purchaser's responsibility and may be added to an invoice as a separate and additional charge to purchaser unless an acceptable exemption certificate is presented.
- To the extent purchaser supplies or modifies the standard specifications for any products, Landscape Forms, Inc. expressly disclaims all representations and warranties related to such products or their design whether express or implied except that the products shall be manufactured in accordance with purchaser's specifications.
- **REMITTANCE OPTIONS:** For information on paying via credit card, ACH, direct bank transfer, or wire please email us at AR@landscapeforms.com. Please note all credit card charges will be subject to a 3% surcharge. Mail payments to:

USD Checks
Landscape Forms, Inc.
Dept 78073
PO Box 78000
Detroit, MI 48278-0073
USA

CAD Cheques
Landscape Forms, Inc.
PO Box 2408
Station A
Toronto, Ontario M5W 2K6
CAN

Cust #: 66433
SSR: Kathy Murphy
Rep: Central and South Texas Team

Landscape Forms Customer Service

Purchaser | Seller

Quote

Date: 07/01/2026
LF Quote#: 0000470083
PO#:
Project: City of Brownsville - Downtown Master Streetscape - Benches

CORPORATE
7800 E. Michigan Avenue
Kalamazoo, MI 49048-9543
P: 800.521.2546 F: 269.381.3455
www.landscapeforms.com
Federal I.D.# 38-1897577
FSC# PBN-COC-001261

Bill To: City of Brownsville
ATTN: Allan E. Garces
1001 E. Elizabeth St, City Plaza
1st Floor Ste 101
Brownsville, TX 78520

Ship To: City of Brownsville
ATTN: Allan E. Garces
1001 E. Elizabeth St, City Plaza
1st Floor Ste 101
Brownsville, TX 78520

Ship To Contact Phone:956-548-6182
Ship Via: Common Carrier
F.O.B.: Destination

Qty	Description	Unit Price	Total Price
	CONTRACT: OMNIA #07-100		
	* DOCK/FORKLIFT/PALLET JACK REQUIRED TO OFFLOAD *		
	When ordering please confirm:		
	• Shipping address and contact information (name and ph#)		
	• Billing address and contact information		
	• Is your firm or the project tax exempt? If so, exemption certificate must accompany order		
	• Delivery schedule:		
	___Ship immediately upon completion OR Ship On/After the date:_____		
	Order 1		
34	Plainwell Bench Length: *72"* Insert Style: *Wood* Wood Selection: *Thermally Modified Ash no finish (exterior use only)* Arm Option: *Center Arm* Powdercoat Color: *Obsidian* Standard Features: *Freestanding/Surface Mountable*	$ 2,355.72	$ 80,094.48
1	Aerosol spray touch-up paint - 1 can Obsidian	$ 0.00	$ 0.00

Item Total	$ 80,094.48
Shipping & Handling	$ 8,670.00
Sub Total	$ 88,764.48
Estimated Tax	$ 0.00

Cust #: 66433
SSR: Kathy Murphy
Rep: Central and South Texas Team

Landscape Forms Customer Service

Purchaser | Seller

landscapeforms

Quote

Date: 07/01/2026
LF Quote#: 0000470083
PO#:
Project: City of Brownsville - Downtown Master Streetscape - Benches

Bill To: City of Brownsville
ATTN: Allan E. Garces
1001 E. Elizabeth St, City Plaza
1st Floor Ste 101
Brownsville, TX 78520

CORPORATE
7800 E. Michigan Avenue
Kalamazoo, MI 49048-9543
P: 800.521.2546 F: 269.381.3455
www.landscapeforms.com
Federal I.D.# 38-1897577
FSC# PBN-COC-001261

Ship To: City of Brownsville
ATTN: Allan E. Garces
1001 E. Elizabeth St, City Plaza
1st Floor Ste 101
Brownsville, TX 78520

Ship To Contact Phone:956-548-6182
Ship Via: Common Carrier
F.O.B.: Destination

Qty	Description	Unit Price	Total Price
		Document Total	$ 88,764.48

Payment Terms: Pending-Net30

Landscape Forms, Inc. reserves the right to change payment terms based on payment history as well as information obtained from commercial credit reporting agencies.

- Purchaser is responsible for confirming options, materials, quantities, etc., for completeness and conformity to plans and specifications.
- Changes to or cancellations of standard product orders may incur a penalty charge of 30% or more.
- Orders including modified or custom product (Specials and/or Studio 431) may not be cancelled. If an order is terminated by the customer, payment in full is expected for the product subtotal regardless of current project status.
- Orders including modified or custom product (Specials, Structure and/or Studio 431) are subject to price increase after engineering/ product development is complete and approved by the customer. Modifications in price will be handled via change order.
- All manufacturing of product, as engineered and/or designed by Landscape Forms, shall be performed exclusively by Landscape Forms or its expressly authorized affiliates or subcontractors. Customer shall not engage any third party for the manufacture of said Product without the prior written consent of Landscape Forms.
- All orders that include a swing product must include an executed liability waiver to be accepted and entered into production.
- Only the Material Supplier Standard Limited Warranty shall apply to all product sold by Landscape Forms. No other warranties or changes to the standard warranty will be applied or accepted.
- No merchandise can be returned without authorization from Landscape Forms. Returns may be subject to a disposition fee of 30-100%.
- Prices based on quantities shown and quantity changes may affect price.
- QUOTED prices are held for 60 days. After receipt of a written ORDER, prices will be held for up to twelve months from receipt of the order. Changes in quantity or specification may affect pricing. Upfit and Scenic pricing will only be held for six months after receipt of a written order.
- Pricing includes selection from our standard color palette. Optional colors and custom color matches are available for an additional fee and will extend lead-time. Please contact our corporate office for more information.
- Fixtures for custom products are the property of Landscape Forms, Inc., and are not available for sale.
- Landscape Forms is a supplier only and ships via common carrier. Customer is responsible for offloading and installing unless otherwise indicated above.

Cust #: 66433
SSR: Kathy Murphy
Rep: Central and South Texas Team

Landscape Forms Customer Service

Purchaser | Seller

landscapeforms

Quote

Date: 07/01/2026
LF Quote#: 0000470083
PO#:
Project: City of Brownsville - Downtown Master Streetscape - Benches

Bill To: City of Brownsville
ATTN: Allan E. Garces
1001 E. Elizabeth St, City Plaza
1st Floor Ste 101
Brownsville, TX 78520

CORPORATE
7800 E. Michigan Avenue
Kalamazoo, MI 49048-9543
P: 800.521.2546 F: 269.381.3455
www.landscapeforms.com
Federal I.D.# 38-1897577
FSC# PBN-COC-001261

Ship To: City of Brownsville
ATTN: Allan E. Garces
1001 E. Elizabeth St, City Plaza
1st Floor Ste 101
Brownsville, TX 78520

Ship To Contact Phone:956-548-6182
Ship Via: Common Carrier
F.O.B.: Destination

- Handling fees alone will apply on third party and customer pick-up orders.
- Mounting hardware is only available on a limited number of products. Please consult the installation recommendations or contact our corporate office to confirm. In the event hardware is provided, it MUST be used for proper installation.
- Refer to Care and Maintenance guidelines for more detailed information and instructions.
- All orders ship upon completion of fabrication. A one-week grace period may be available, after which storage fees will apply.
- This Agreement contains the entire understanding between the parties. All prior communications are merged into this Agreement. The terms of this Agreement shall control any conflict between documents.
- This Agreement may be signed by the parties separately and by facsimile, and together they shall be deemed one binding, original Agreement.
- Purchaser shall pay all costs and expenses paid or incurred by Landscape Forms, Inc. in collecting any amounts due for goods purchased by Purchaser, including without limitation, reasonable attorneys' fees and collection costs. Balances on invoices not paid within 30 days of date of invoice, or within an alternate period of time as determined and indicated by Landscape Forms, shall incur interest at a rate of 18% per annum. Cash discounts are not offered.
- The quoted price may include estimated tax, duties and tariffs. Actual tax, duties and tariffs shall be purchaser’s responsibility and may be added to an invoice as a separate and additional charge to purchaser unless an acceptable exemption certificate is presented.
- To the extent purchaser supplies or modifies the standard specifications for any products, Landscape Forms, Inc. expressly disclaims all representations and warranties related to such products or their design whether express or implied except that the products shall be manufactured in accordance with purchaser's specifications.
- **REMITTANCE OPTIONS:** For information on paying via credit card, ACH, direct bank transfer, or wire please email us at AR@landscapeforms.com. Please note all credit card charges will be subject to a 3% surcharge. Mail payments to:

USD Checks
Landscape Forms, Inc.
Dept 78073
PO Box 78000
Detroit, MI 48278-0073
USA

CAD Cheques
Landscape Forms, Inc.
PO Box 2408
Station A
Toronto, Ontario M5W 2K6
CAN

Cust #: 66433
SSR: Kathy Murphy
Rep: Central and South Texas Team

Landscape Forms Customer Service

Purchaser | Seller

Quote

Date: 07/01/2026
LF Quote#: 0000470088
PO#:
Project: City of Brownsville - Downtown Master Streetscape - Benches

Bill To: City of Brownsville
ATTN: Allan E. Garces
1001 E. Elizabeth St, City Plaza
1st Floor Ste 101
Brownsville, TX 78520

CORPORATE
7800 E. Michigan Avenue
Kalamazoo, MI 49048-9543
P: 800.521.2546 F: 269.381.3455
www.landscapeforms.com
Federal I.D.# 38-1897577
FSC# PBN-COC-001261

Ship To: City of Brownsville
ATTN: Allan E. Garces
1001 E. Elizabeth St, City Plaza
1st Floor Ste 101
Brownsville, TX 78520

Ship To Contact Phone:956-548-6182
Ship Via: Common Carrier
F.O.B.: Destination

Qty	Description	Unit Price	Total Price

CONTRACT: OMNIA #07-100

* DOCK/FORKLIFT/PALLET JACK REQUIRED TO OFFLOAD *

When ordering please confirm:

- Shipping address and contact information (name and ph#)
- Billing address and contact information
- Is your firm or the project tax exempt? If so, exemption certificate must accompany order
- Delivery schedule:

___Ship immediately upon completion
OR Ship On/After the date:_____

Order 2

34		$ 2,355.72	$ 80,094.48

Plainwell Bench

Length:	*72"*
Insert Style:	*Wood*
Wood Selection:	*Thermally Modified Ash no finish (exterior use only)*
Arm Option:	*Center Arm*
Powdercoat Color:	*Obsidian*
Standard Features:	*Freestanding/Surface Mountable*

Item Total	$ 80,094.48
Shipping & Handling	$ 8,660.00
Sub Total	$ 88,754.48
Estimated Tax	$ 0.00
Document Total	$ 88,754.48

Cust #: 66433
SSR: Kathy Murphy
Rep: Central and South Texas Team

Landscape Forms Customer Service

Purchaser | Seller

landscapeforms

Quote

Date: 07/01/2026
LF Quote#: 0000470088
PO#:
Project: City of Brownsville - Downtown Master Streetscape - Benches

CORPORATE
7800 E. Michigan Avenue
Kalamazoo, MI 49048-9543
P: 800.521.2546 F: 269.381.3455
www.landscapeforms.com
Federal I.D.# 38-1897577
FSC# PBN-COC-001261

Bill To: City of Brownsville
ATTN: Allan E. Garces
1001 E. Elizabeth St, City Plaza
1st Floor Ste 101
Brownsville, TX 78520

Ship To: City of Brownsville
ATTN: Allan E. Garces
1001 E. Elizabeth St, City Plaza
1st Floor Ste 101
Brownsville, TX 78520

Ship To Contact Phone:956-548-6182
Ship Via: Common Carrier
F.O.B.: Destination

Payment Terms: Pending-Net30

Landscape Forms, Inc. reserves the right to change payment terms based on payment history as well as information obtained from commercial credit reporting agencies.

- Purchaser is responsible for confirming options, materials, quantities, etc., for completeness and conformity to plans and specifications.
- Changes to or cancellations of standard product orders may incur a penalty charge of 30% or more.
- Orders including modified or custom product (Specials and/or Studio 431) may not be cancelled. If an order is terminated by the customer, payment in full is expected for the product subtotal regardless of current project status.
- Orders including modified or custom product (Specials, Structure and/or Studio 431) are subject to price increase after engineering/ product development is complete and approved by the customer. Modifications in price will be handled via change order.
- All manufacturing of product, as engineered and/or designed by Landscape Forms, shall be performed exclusively by Landscape Forms or its expressly authorized affiliates or subcontractors. Customer shall not engage any third party for the manufacture of said Product without the prior written consent of Landscape Forms.
- All orders that include a swing product must include an executed liability waiver to be accepted and entered into production.
- Only the Material Supplier Standard Limited Warranty shall apply to all product sold by Landscape Forms. No other warranties or changes to the standard warranty will be applied or accepted.
- No merchandise can be returned without authorization from Landscape Forms. Returns may be subject to a disposition fee of 30-100%.
- Prices based on quantities shown and quantity changes may affect price.
- QUOTED prices are held for 60 days. After receipt of a written ORDER, prices will be held for up to twelve months from receipt of the order. Changes in quantity or specification may affect pricing. Upfit and Scenic pricing will only be held for six months after receipt of a written order.
- Pricing includes selection from our standard color palette. Optional colors and custom color matches are available for an additional fee and will extend lead-time. Please contact our corporate office for more information.
- Fixtures for custom products are the property of Landscape Forms, Inc., and are not available for sale.
- Landscape Forms is a supplier only and ships via common carrier. Customer is responsible for offloading and installing unless otherwise indicated above.
- Handling fees alone will apply on third party and customer pick-up orders.
- Mounting hardware is only available on a limited number of products. Please consult the installation recommendations or contact our corporate office to confirm. In the event hardware is provided, it MUST be used for proper installation.
- Refer to Care and Maintenance guidelines for more detailed information and instructions.
- All orders ship upon completion of fabrication. A one-week grace period may be available, after which storage fees will apply.

Cust #: 66433
SSR: Kathy Murphy
Rep: Central and South Texas Team

Landscape Forms Customer Service

Purchaser | Seller

landscapeforms

Quote

Date: 07/01/2026
LF Quote#: 0000470088
PO#:
Project: City of Brownsville - Downtown Master Streetscape - Benches

Bill To: City of Brownsville
ATTN: Allan E. Garces
1001 E. Elizabeth St, City Plaza
1st Floor Ste 101
Brownsville, TX 78520

CORPORATE
7800 E. Michigan Avenue
Kalamazoo, MI 49048-9543
P: 800.521.2546 F: 269.381.3455
www.landscapeforms.com
Federal I.D.# 38-1897577
FSC# PBN-COC-001261

Ship To: City of Brownsville
ATTN: Allan E. Garces
1001 E. Elizabeth St, City Plaza
1st Floor Ste 101
Brownsville, TX 78520

Ship To Contact Phone:956-548-6182
Ship Via: Common Carrier
F.O.B.: Destination

- This Agreement contains the entire understanding between the parties. All prior communications are merged into this Agreement. The terms of this Agreement shall control any conflict between documents.
- This Agreement may be signed by the parties separately and by facsimile, and together they shall be deemed one binding, original Agreement.
- Purchaser shall pay all costs and expenses paid or incurred by Landscape Forms, Inc. in collecting any amounts due for goods purchased by Purchaser, including without limitation, reasonable attorneys' fees and collection costs. Balances on invoices not paid within 30 days of date of invoice, or within an alternate period of time as determined and indicated by Landscape Forms, shall incur interest at a rate of 18% per annum. Cash discounts are not offered.
- The quoted price may include estimated tax, duties and tariffs. Actual tax, duties and tariffs shall be purchaser's responsibility and may be added to an invoice as a separate and additional charge to purchaser unless an acceptable exemption certificate is presented.
- To the extent purchaser supplies or modifies the standard specifications for any products, Landscape Forms, Inc. expressly disclaims all representations and warranties related to such products or their design whether express or implied except that the products shall be manufactured in accordance with purchaser's specifications.
- **REMITTANCE OPTIONS:** For information on paying via credit card, ACH, direct bank transfer, or wire please email us at AR@landscapeforms.com. Please note all credit card charges will be subject to a 3% surcharge. Mail payments to:

USD Checks
Landscape Forms, Inc.
Dept 78073
PO Box 78000
Detroit, MI 48278-0073
USA

CAD Cheques
Landscape Forms, Inc.
PO Box 2408
Station A
Toronto, Ontario M5W 2K6
CAN

Cust #: 66433
SSR: Kathy Murphy
Rep: Central and South Texas Team

Landscape Forms Customer Service

Purchaser | Seller

Quote

Date: 07/01/2026
LF Quote#: 0000470089
PO#:
Project: City of Brownsville - Downtown Master Streetscape - Benches

Bill To: City of Brownsville
ATTN: Allan E. Garces
1001 E. Elizabeth St, City Plaza
1st Floor Ste 101
Brownsville, TX 78520

CORPORATE
7800 E. Michigan Avenue
Kalamazoo, MI 49048-9543
P: 800.521.2546 F: 269.381.3455
www.landscapeforms.com
Federal I.D.# 38-1897577
FSC# PBN-COC-001261

Ship To: City of Brownsville
ATTN: Allan E. Garces
1001 E. Elizabeth St, City Plaza
1st Floor Ste 101
Brownsville, TX 78520

Ship To Contact Phone:956-548-6182
Ship Via: Common Carrier
F.O.B.: Destination

Qty	Description	Unit Price	Total Price

CONTRACT: OMNIA #07-100

* DOCK/FORKLIFT/PALLET JACK REQUIRED TO OFFLOAD *

When ordering please confirm:

- Shipping address and contact information (name and ph#)
- Billing address and contact information
- Is your firm or the project tax exempt? If so, exemption certificate must accompany order
- Delivery schedule:

___Ship immediately upon completion
OR Ship On/After the date:_____

Order 3

32		$ 2,355.72	$ 75,383.04
	Plainwell Bench		
	Length: *72"*		
	Insert Style: *Wood*		
	Wood Selection: *Thermally Modified Ash no finish (exterior use only)*		
	Arm Option: *Center Arm*		
	Powdercoat Color: *Obsidian*		
	Standard Features: *Freestanding/Surface Mountable*		

Item Total	$ 75,383.04
Shipping & Handling	$ 8,150.00
Sub Total	$ 83,533.04
Estimated Tax	$ 0.00
Document Total	$ 83,533.04

Cust #: 66433
SSR: Kathy Murphy
Rep: Central and South Texas Team

Landscape Forms Customer Service

Purchaser | Seller

landscapeforms

Quote

Date: 07/01/2026
LF Quote#: 0000470089
PO#:
Project: City of Brownsville - Downtown Master Streetscape - Benches

CORPORATE
7800 E. Michigan Avenue
Kalamazoo, MI 49048-9543
P: 800.521.2546 F: 269.381.3455
www.landscapeforms.com
Federal I.D.# 38-1897577
FSC# PBN-COC-001261

Bill To: City of Brownsville
ATTN: Allan E. Garces
1001 E. Elizabeth St, City Plaza
1st Floor Ste 101
Brownsville, TX 78520

Ship To: City of Brownsville
ATTN: Allan E. Garces
1001 E. Elizabeth St, City Plaza
1st Floor Ste 101
Brownsville, TX 78520

Ship To Contact Phone:956-548-6182
Ship Via: Common Carrier
F.O.B.: Destination

Payment Terms: Pending-Net30

Landscape Forms, Inc. reserves the right to change payment terms based on payment history as well as information obtained from commercial credit reporting agencies.

- Purchaser is responsible for confirming options, materials, quantities, etc., for completeness and conformity to plans and specifications.
- Changes to or cancellations of standard product orders may incur a penalty charge of 30% or more.
- Orders including modified or custom product (Specials and/or Studio 431) may not be cancelled. If an order is terminated by the customer, payment in full is expected for the product subtotal regardless of current project status.
- Orders including modified or custom product (Specials, Structure and/or Studio 431) are subject to price increase after engineering/ product development is complete and approved by the customer. Modifications in price will be handled via change order.
- All manufacturing of product, as engineered and/or designed by Landscape Forms, shall be performed exclusively by Landscape Forms or its expressly authorized affiliates or subcontractors. Customer shall not engage any third party for the manufacture of said Product without the prior written consent of Landscape Forms.
- All orders that include a swing product must include an executed liability waiver to be accepted and entered into production.
- Only the Material Supplier Standard Limited Warranty shall apply to all product sold by Landscape Forms. No other warranties or changes to the standard warranty will be applied or accepted.
- No merchandise can be returned without authorization from Landscape Forms. Returns may be subject to a disposition fee of 30-100%.
- Prices based on quantities shown and quantity changes may affect price.
- QUOTED prices are held for 60 days. After receipt of a written ORDER, prices will be held for up to twelve months from receipt of the order. Changes in quantity or specification may affect pricing. Upfit and Scenic pricing will only be held for six months after receipt of a written order.
- Pricing includes selection from our standard color palette. Optional colors and custom color matches are available for an additional fee and will extend lead-time. Please contact our corporate office for more information.
- Fixtures for custom products are the property of Landscape Forms, Inc., and are not available for sale.
- Landscape Forms is a supplier only and ships via common carrier. Customer is responsible for offloading and installing unless otherwise indicated above.
- Handling fees alone will apply on third party and customer pick-up orders.
- Mounting hardware is only available on a limited number of products. Please consult the installation recommendations or contact our corporate office to confirm. In the event hardware is provided, it MUST be used for proper installation.
- Refer to Care and Maintenance guidelines for more detailed information and instructions.
- All orders ship upon completion of fabrication. A one-week grace period may be available, after which storage fees will apply.

Cust #: 66433
SSR: Kathy Murphy
Rep: Central and South Texas Team

Landscape Forms Customer Service

Purchaser | Seller

landscapeforms

Quote

Date: 07/01/2026
LF Quote#: 0000470089
PO#:
Project: City of Brownsville - Downtown Master Streetscape - Benches

Bill To: City of Brownsville
ATTN: Allan E. Garces
1001 E. Elizabeth St, City Plaza
1st Floor Ste 101
Brownsville, TX 78520

CORPORATE
7800 E. Michigan Avenue
Kalamazoo, MI 49048-9543
P: 800.521.2546 F: 269.381.3455
www.landscapeforms.com
Federal I.D.# 38-1897577
FSC# PBN-COC-001261

Ship To: City of Brownsville
ATTN: Allan E. Garces
1001 E. Elizabeth St, City Plaza
1st Floor Ste 101
Brownsville, TX 78520

Ship To Contact Phone:956-548-6182
Ship Via: Common Carrier
F.O.B.: Destination

- This Agreement contains the entire understanding between the parties. All prior communications are merged into this Agreement. The terms of this Agreement shall control any conflict between documents.
- This Agreement may be signed by the parties separately and by facsimile, and together they shall be deemed one binding, original Agreement.
- Purchaser shall pay all costs and expenses paid or incurred by Landscape Forms, Inc. in collecting any amounts due for goods purchased by Purchaser, including without limitation, reasonable attorneys' fees and collection costs. Balances on invoices not paid within 30 days of date of invoice, or within an alternate period of time as determined and indicated by Landscape Forms, shall incur interest at a rate of 18% per annum. Cash discounts are not offered.
- The quoted price may include estimated tax, duties and tariffs. Actual tax, duties and tariffs shall be purchaser's responsibility and may be added to an invoice as a separate and additional charge to purchaser unless an acceptable exemption certificate is presented.
- To the extent purchaser supplies or modifies the standard specifications for any products, Landscape Forms, Inc. expressly disclaims all representations and warranties related to such products or their design whether express or implied except that the products shall be manufactured in accordance with purchaser's specifications.
- **REMITTANCE OPTIONS:** For information on paying via credit card, ACH, direct bank transfer, or wire please email us at AR@landscapeforms.com. Please note all credit card charges will be subject to a 3% surcharge. Mail payments to:

USD Checks
Landscape Forms, Inc.
Dept 78073
PO Box 78000
Detroit, MI 48278-0073
USA

CAD Cheques
Landscape Forms, Inc.
PO Box 2408
Station A
Toronto, Ontario M5W 2K6
CAN

Cust #: 66433
SSR: Kathy Murphy
Rep: Central and South Texas Team

Landscape Forms Customer Service

Purchaser | Seller

CERTIFICATE OF INTERESTED PARTIES

FORM 1295

Complete Nos. 1 - 4 and 6 if there are interested parties.
Complete Nos. 1, 2, 3, 5, and 6 if there are no interested parties.

OFFICE USE ONLY
CERTIFICATION OF FILING

Certificate Number:
2026-1490576

Date Filed:
07/17/2026

Date Acknowledged:

1 Name of business entity filing form, and the city, state and country of the business entity's place of business.

Landscape Forms, Inc
Kalamazoo, MI United States

2 Name of governmental entity or state agency that is a party to the contract for which the form is being filed.

City of Brownsville

3 Provide the identification number used by the governmental entity or state agency to track or identify the contract, and provide a description of the services, goods, or other property to be provided under the contract.

Omnia 700-100
Benches and trash bins

4 Name of Interested Party	City, State, Country (place of business)	Nature of interest (check applicable)	
		Controlling	Intermediary

5 Check only if there is NO Interested Party. [X]

6 UNSWORN DECLARATION

My name is Cassi Boven, and my date of birth is N/A.

My address is 7800 E Michigan Ave Kalamazoo MI 49048, _____, _____, _____, _____.
(city) (state) (zip code) (country)

I declare under penalty of perjury that the foregoing is true and correct.

Executed in Kalamazoo County, State of MI, on the 17 day of July (month), 20 26 (year).

Cassi Boven

Signature of authorized agent of contracting business entity
(Declarant)

To:	Mayor and City Commission
Through:	Alan Guard, Interim City Manager
From:	Sarai Madrigal, Senior Project & Business Analyst
Date:	Tuesday, July 21, 2026
Agenda #:	Consideration and **ACTION** to award a Contract to Terracon Consultants, Inc. in the amount of $126,425 for materials testing and inspection services, Contract No.309-26-EPMO-CMA, for Bid Package No. 1 of the Public Safety Complex. (Enterprise Project Management Office)

Summary:
Department: Enterprise Project Management Office
• Exemption Type:
• Contract Number: 309-26-EPMO-CMA
• Vendor: Terracon Consultants, Inc.
• Contract Amount: $126.425
• Term: Upon execution through completion of the Public Safety Complex – Phase 1 project.

Project Scope and Analysis:

Funding:

Source:
Amount:
Local Contribution if Applicable:

Recommendation:

Commission Pillar:
Public Safety

Attachments:
1. 309-26-EPMO-CMA Procurement Analysis
2. 309-26-EPMO-CMA Terracon Consultants, Inc

PROCUREMENT ANALYSIS

Date: Tuesday, July 14, 2026
To: Mr. John Cowen Jr., City Mayor
From: Mr. Alan Guard, Interim City Manager
CC: Mr. Damian Espinoza, Procurement Director
Ms. Yolanda De La Torre, Enterprise Project Management Office Director

Agenda Title:
Agenda Item for the City Commission meeting of Tuesday, July 21, 2026.
"Consideration and Action to Authorize a Contract with Terracon Consultants, Inc. in the amount of $126,425.00 for Contract No. 309-26-EPMO-CMA, for a term upon execution through completion of the Public Safety Complex – Phase 1 project, for Materials Testing & Inspection Services for the Enterprise Project Management Office Department"

Executive Summary:

- Department: Enterprise Project Management Office
- Exemption Type: Vendor Under a Master Agreement (GTS-67-0622)
- Contract Number: 309-26-EPMO-CMA
- Vendor: Terracon Consultants, Inc.
- Contract Amount: Not-to-Exceed $126,425.00
- Term: Upon execution through completion of the Public Safety Complex – Phase 1 project

Background:
The Enterprise Project Management Office identified the need for materials testing and inspection services for the Public Safety Complex – Phase 1 project. These services will provide field observations, laboratory testing, and quality assurance of construction materials to verify general conformance with the project plans and specifications. Compensation will be based on the actual quantities of services performed at the unit rates established in the contractor's proposal, up to the not-to-exceed contract amount.

Exemption Justification:

This contract is being awarded to Terracon Consultants, Inc. under the City's existing Master Agreement **GTS-67-0622** for Geotechnical and Construction Material Testing Services. Procurement has verified that Terracon is an awarded vendor under the pre-approved master agreement, allowing the City to issue a project-specific contract in accordance with the terms of the master agreement

Vendor Information:
Terracon Consultants, Inc.
1506 Mid Cities Drive, Pharr, TX 78577
Point of Contact: Jorge Perez

Exhibits & Supporting Documents:

- Exhibit A – Proposal
- Exhibit B – Master Agreement GTS-67-0622
- Exhibit C – Form 2 - Statement of Conflict of Interest
- Exhibit D – Form 3 - Texas Ethics Commission Certificate of Interested Parties (1295)

Recommendation:

The Procurement Department recommends that the City Commission authorize a contract with Terracon Consultants, Inc. in the not-to-exceed amount of **$126,425.00** under Master Agreement **GTS-67-0622** for Materials Testing & Inspection Services for the Public Safety Complex – Phase 1 project. Approval of this agenda item will authorize the full contract value.

1506 Mid Cities Drive
Pharr, Texas 78577
P (956) 283-8254
Terracon.com

July 1, 2026

City of Brownsville
1001 E. Elizabeth St., Brownsville, TX 78520
Brownsville, Texas 78520

Attn: Mr. Alan Guard, City Manager
P: (956) 561-3901
E: alan.guard@brownsvilletx.gov

RE: Proposal for Materials Testing Services
City of Brownsville Public Safety Complex – Phase 1
Brownsville, Texas
Terracon Proposal No. 1000016903

Dear Mr. Guard:

Terracon Consultants, Inc. (Terracon) is pleased to present this proposal for materials testing and inspection services for the above-referenced project. The purpose of our services will be to periodically observe construction activities and test construction materials to evaluate general conformance with project documents. **We understand that we have been chosen to provide these services for this publicly funded project. Therefore, by providing cost information we are not in violation of the Texas Professional Services Procurement Act.**

A. PROJECT INFORMATION

The project consists of all earthwork and underground utilities for the freestanding Public Safety Building. The proposed utilities include the installation of sanitary sewer lines, storm sewer lines, water lines, and fire protection lines. The project site is located in Brownsville, Texas.

Project documents available for review at the time of this proposal include:

- Project plans titled "Public Safety Building – Bid Package 1" dated April 17, 2026.

If selected for this project, Terracon requests that we be placed on the distribution of all documents.

B. WHY TERRACON?

Construction Materials Testing & Special Inspection Services

Our team of inspectors, technicians, and engineers is experienced with providing materials testing, special inspections, and/or observations of concrete, soils, aggregate, masonry, structural steel, foundations, fireproofing, and asphalt pavement in the local area and are familiar with the recognized building jurisdiction requirements.

Compass is Terracon's latest client interfacing tool and elevates the way we do business. Within Terracon Compass, you can access your projects and their associated data, including environmental and geotechnical projects. When you open a materials project within Compass, you will see your materials tests and observations placed on a map. This geographic reference allows you to find your information by the "where", rather than the "when." Other features of Compass include:

- Filters for Date Performed, Service Type and Test Result Status
- Deviation for Non-Conformance Summary: Image overlays to reference multiple plan pages to your test results
- Map layer options: Test results are inserted into Compass as soon as the report has been reviewed and distributed. It becomes easier than ever to view and close deviations with an option to display within a map while also showing them in a table format.

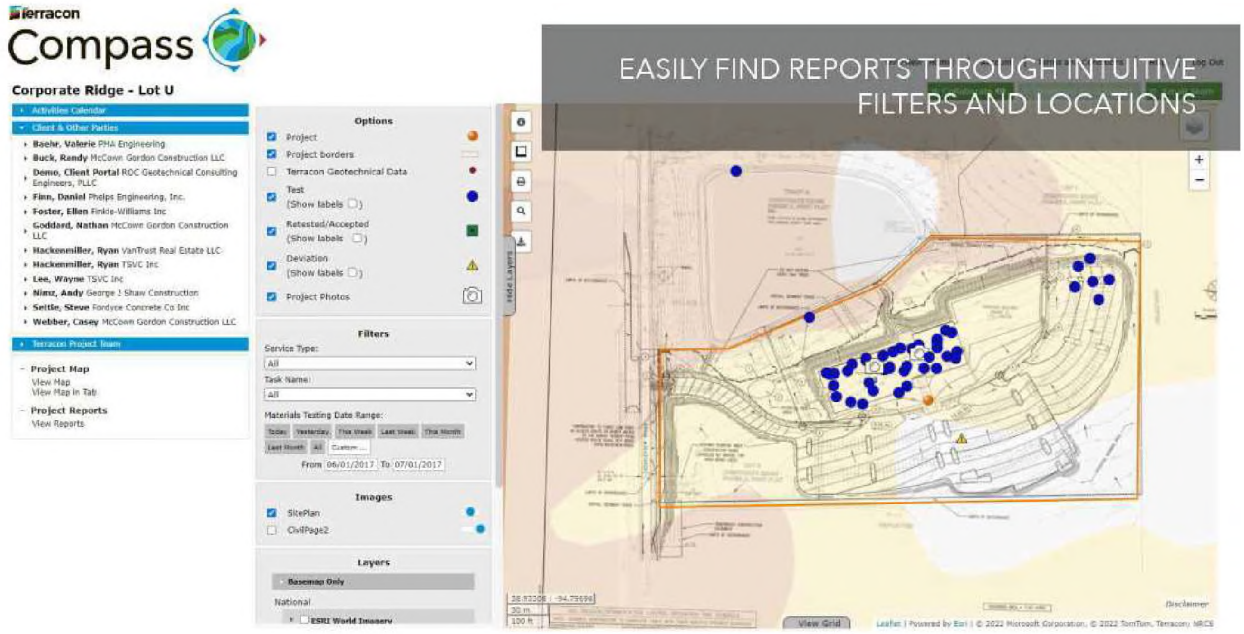

Laboratory Capabilities

Our Pharr laboratory are accredited by AASHTO Resource which is recognized by ASTM E329 Standard Specification for Agencies Engaged in Construction Inspection Testing, or Special Inspection. The scope of accreditation includes the field of Soils, Aggregates, and Portland Cement Concrete. As a requirement of accreditation, we regularly participate in the Proficiency Sample Programs of both AASHTO Resource and the Cement and Concrete Reference Laboratory (CCRL). Our office includes a fully equipped laboratory and employs engineering technicians and special inspectors certified by many agencies including the American Concrete Institute (ACI) and by Texas Department of Transportation (TxDOT). We provide a rigorous internal training program where our staff are evaluated in specific field and laboratory test procedures by internal Terracon auditors and external agencies.

- Accredited by AASHTO Materials Reference Laboratory (AMRL)
- Accredited by Concrete and Cement Reference Laboratory (CCRL)

C. SCOPE OF SERVICES

Terracon proposes to provide the following scope of services. The proposed scope is based on our review of the plans and specifications and on our expectation of the services that will be requested.

A. Earthwork Observations and Testing:

- Sample materials proposed for use as backfill. Prepare and test the samples for Atterberg Limits (ASTM D4318), Sieve Analysis with Percent Passing No. 200 Sieve (ASTM D422 & D1140), Sieve Analysis (ASTM C136), USCS Soil Classification (ASTM D2487) and Moisture Density Relation – Standard Proctor (ASTM D698 and/or D1557).
- On a call-out (periodic) basis, perform field compaction / moisture tests using the nuclear method (ASTM D6938) to determine the compaction level and moisture content of the soil.
- On a call-out (periodic) basis, perform proof rolling observation on subgrade soil prior to soil fill.

B. Project Management and Administration:

- A project manager will be assigned to the project to review the daily activity and assist in scheduling the work. Field and laboratory tests will be reviewed prior to submittal. The project manager will be responsible for monitoring the project budget and will oversee the preparation of the final report.

D. COMPENSATION

Our scope of services will be determined by your authorization for specific services as requested by your project superintendent or other representative. Charges for our services will be based on the quantities of services provided and the unit rates shown on the attached TABLE 1.

Additional services that may be requested (but are not included in this agreement) can be provided at the unit fees of the current "Schedule of Services and Fees". The actual cost of our services will be determined by the construction schedule and the quantity of services provided. Based on our review of the construction plans and specifications and our experience with similar construction projects, our fee estimates to provide the proposed scope of services is **$126,425.00**.

There is a minimum charge of four (4) hours per trip for all field services. Overtime rates (1.5 times regular rates) apply to time in excess of 8 hours per day (Monday to Friday), hours before 8:00AM or after 5:00PM (Monday to Friday) and all hours on Saturdays. The overtime factor is 2.0 for work on Sundays and holidays.

Invoices will be issued monthly for services provided, as authorized or requested by client or a designated representative. Terracon's fee is due within 30 days of your receipt of each invoice.

E. SITE ACCESS AND SAFETY

The client shall secure all necessary site related approvals, permits, licenses, and consents necessary to commence and complete the services and will execute any necessary site access agreement. Terracon will be responsible for supervision of safety measures for its own employees but shall not be responsible for the supervision or health and safety precautions for any third parties, including Client's contractors, subcontractors, or other parties present at the site.

Employee safety is a core value of Terracon, and we are committed to an Incident and Injury-Free (IIF) workplace. It is our personal and organizational commitment at all levels of the company to everyone going home safe to their family every day. All employees are expected to perform their job assignments with safety as a primary objective. Terracon dedicates the time, resources, and equipment necessary for an IIF environment and no employee will be required to work in unsafe conditions.

F. TESTING AND OBSERVATION

The above services will be provided under an as-requested basis. Additionally, we request a 24-hour notice to schedule our services through our schedule line **(956) 283-8254**.

Client understands that testing and observation are discrete sampling procedures, and that such procedures indicate conditions only at the depths, locations, and times the procedures were performed. Terracon will provide test results and opinions based on tests and field observation only for the work tested. Client understands that testing and observation are not continuous or exhaustive and are conducted to reduce – not eliminate – project risk. Client agrees to the level or amount of testing performed and the associated risk. Client is responsible (even if delegated to contractor) for notifying and scheduling Terracon so Terracon can perform these services.

Terracon shall not be responsible for the quality and completeness of Client's contractor's work or their adherence to the project documents, and Terracon's performance of testing and observation services shall not relieve contractor in any way from its responsibility for defects discovered in its work or create a warranty or guarantee. Terracon will not supervise or direct the work performed by contractor or its subcontractors and is not responsible for their means and methods.

G. AUTHORIZATION

This proposal may be accepted by executing the attached Agreement for Services and returning the executed agreement, along with this proposal, to Terracon. This proposal for services and accompanying limitations shall constitute the terms and conditions for our services to be performed for the project.

We appreciate the opportunity to propose on this project. Please call us at (956) 283-8254 if you have any questions concerning this proposal.

Sincerely,
TERRACON CONSULTANTS, INC.
Firm Registration: TX F-3272

Jorge Perez

Jorge Perez
Group Manager

Lupe Leal

Guadalupe Leal
Department Manager

Attachments: Table 1 – Estimated Fee Summary
Agreement for Services
Distribution List

TABLE 1
ESTIMATED FEE SUMMARY

Our fee estimate is in accordance with the time and tests performed as shown below:

Earthwork Observation/Testing				
Item Description	**Quantity**	**Unit**	**Unit Rate**	**Estimate**
Standard Proctor (Moisture-Density Relationship)	20	Each	$250.00	$5,000.00
(Plasticity Index)	20	Each	$90.00	$1,800.00
% Passing No. 200 Sieve	20	Each	$90.00	$1,800.00
In-Place Density Tests	1490	Each	$25.00	$37,250.00
Technician	860	Hour	$60.00	$51,600.00
Trip Charge	215	Trip	$60.00	$12,900.00
Subtotal, Earthwork				**$110,350.00**
P.E.	20	Hour	$185.00	$3,700.00
E.I.T., Graduate Engineer	100	Hour	$110.00	$11,000.00
Administrative Fee	25	Hour	$55.00	$1,375.00
ESTIMATE TOTAL				**$126,425.00**

The quantity of In-Place Density Tests was determined based on an assumed testing frequency of one test per 5,000 square feet for mass grading, one test per 150 linear feet for utilities, and one test per 2,500 square feet for the building pad. Landscape and green areas were excluded from the testing scope.

Reference Number: 1000016903

AGREEMENT FOR SERVICES

This **AGREEMENT** is between City of Brownsville TX ("Client") and Terracon Consultants, Inc. ("Consultant") for Services to be provided by Consultant for Client on the City of Brownsville Public Safety Complex - Phase 1 - Brownsville, TX - PHA - 26 - Proposal project ("Project"), as described in Consultant's Proposal dated 06/11/2026 ("Proposal"), including but not limited to the Project Information section, unless the Project is otherwise described in Exhibit A to this Agreement (which section or Exhibit is incorporated into this Agreement).

1. **Scope of Services.** The scope of Consultant's services is described in the Proposal, including but not limited to the Scope of Services section ("Services"), unless Services are otherwise described in Exhibit B to this Agreement (which section or exhibit is incorporated into this Agreement). Portions of the Services may be subcontracted. When Consultant subcontracts to other individuals or companies, then consultant will collect from Client on the Subcontractors' behalf. Consultant's Services do not include the investigation or detection of, nor do recommendations in Consultant's reports address the presence or prevention of biological pollutants (e.g., mold, fungi, bacteria, viruses, or their byproducts) or occupant safety issues, such as vulnerability to natural disasters, terrorism, or violence. If Services include purchase of software, Client will execute a separate software license agreement. Consultant's findings, opinions, and recommendations are based solely upon data and information obtained by and furnished to Consultant at the time of the Services.
2. **Acceptance/ Termination.** Client agrees that execution of this Agreement is a material element of the consideration Consultant requires to execute the Services, and if Services are initiated by Consultant prior to execution of this Agreement as an accommodation for Client at Client's request, both parties shall consider that commencement of Services constitutes formal acceptance of all terms and conditions of this Agreement. Additional terms and conditions may be added or changed only by written amendment to this Agreement signed by both parties. In the event Client uses a purchase order or other form to administer this Agreement, the use of such form shall be for convenience purposes only and any additional or conflicting terms it contains are stricken. This Agreement shall not be assigned by either party without prior written consent of the other party. Either party may terminate this Agreement or the Services upon written notice to the other. In such case, Consultant shall be paid costs incurred and fees earned to the date of termination plus reasonable costs of closing the Project.
3. **Change Orders.** Client may request changes to the scope of Services by altering or adding to the Services to be performed. If Client so requests, Consultant will return to Client a statement (or supplemental proposal) of the change setting forth an adjustment to the Services and fees for the requested changes. Following Client's review, Client shall provide written acceptance. If Client does not follow these procedures, but instead directs, authorizes, or permits Consultant to perform changed or additional work, the Services are changed accordingly and Consultant will be paid for this work according to the fees stated or its current fee schedule. If project conditions change materially from those observed at the site or described to Consultant at the time of proposal, Consultant is entitled to a change order equitably adjusting its Services and fee.
4. **Compensation and Terms of Payment.** Client shall pay compensation for the Services performed at the fees stated in the Proposal, including but not limited to the Compensation section, unless fees are otherwise stated in Exhibit C to this Agreement (which section or Exhibit is incorporated into this Agreement). If not stated in either, fees will be according to Consultant's current fee schedule. Fee schedules are valid for the calendar year in which they are issued. Fees do not include sales tax. Client will pay applicable sales tax as required by law. Consultant may invoice Client at least monthly and payment is due upon receipt of invoice. Client shall notify Consultant in writing, at the address below, within 15 days of the date of the invoice if Client objects to any portion of the charges on the invoice, and shall promptly pay the undisputed portion. Client shall pay a finance fee of 1.5% per month, but not exceeding the maximum rate allowed by law, for all unpaid amounts 30 days or older. Client agrees to pay all collection-related costs that Consultant incurs, including attorney fees. Consultant may suspend Services for lack of timely payment. It is the responsibility of Client to determine whether federal, state, or local prevailing wage requirements apply and to notify Consultant if prevailing wages apply. If it is later determined that prevailing wages apply, and Consultant was not previously notified by Client, Client agrees to pay the prevailing wage from that point forward, as well as a retroactive payment adjustment to bring previously paid amounts in line with prevailing wages. Client also agrees to defend, indemnify, and hold harmless Consultant from any alleged violations made by any governmental agency regulating prevailing wage activity for failing to pay prevailing wages, including the payment of any fines or penalties.
5. **Third Party Reliance.** This Agreement and the Services provided are for Consultant and Client's sole benefit and exclusive use with no third party beneficiaries intended. Reliance upon the Services and any work product is limited to Client, and is not intended for third parties other than those who have executed Consultant's reliance agreement, subject to the prior approval of Consultant and Client.
6. **LIMITATION OF LIABILITY. CLIENT AND CONSULTANT HAVE EVALUATED THE RISKS AND REWARDS ASSOCIATED WITH THIS PROJECT, INCLUDING CONSULTANT'S FEE RELATIVE TO THE RISKS ASSUMED, AND AGREE TO ALLOCATE CERTAIN OF THE ASSOCIATED RISKS. TO THE FULLEST EXTENT PERMITTED BY LAW, THE TOTAL AGGREGATE LIABILITY OF CONSULTANT (AND ITS RELATED CORPORATIONS AND EMPLOYEES) TO CLIENT AND THIRD PARTIES GRANTED RELIANCE IS LIMITED TO THE GREATER OF $100,000 OR CONSULTANT'S FEE, FOR ANY AND ALL INJURIES, DAMAGES, CLAIMS, LOSSES, OR EXPENSES (INCLUDING ATTORNEY AND EXPERT FEES) ARISING OUT OF CONSULTANT'S SERVICES OR THIS AGREEMENT. PRIOR TO ACCEPTANCE OF THIS AGREEMENT AND UPON WRITTEN REQUEST FROM CLIENT, CONSULTANT MAY NEGOTIATE A HIGHER LIMITATION FOR ADDITIONAL CONSIDERATION IN THE FORM OF A SURCHARGE TO BE ADDED TO THE AMOUNT STATED IN THE COMPENSATION SECTION OF THE PROPOSAL. THIS LIMITATION SHALL APPLY REGARDLESS OF AVAILABLE PROFESSIONAL LIABILITY INSURANCE COVERAGE, CAUSE(S), OR THE THEORY OF LIABILITY, INCLUDING NEGLIGENCE, INDEMNITY, OR OTHER RECOVERY. THIS LIMITATION SHALL NOT APPLY TO THE EXTENT THE DAMAGE IS PAID UNDER CONSULTANT'S COMMERCIAL GENERAL LIABILITY POLICY.**
7. **Indemnity/Statute of Limitations.** Consultant shall indemnify and hold harmless Client and its respective employees from and against legal liability for claims, losses, damages, and expenses to the extent such claims, losses, damages, or expenses are legally determined to be caused by Consultant's negligent acts, errors, or omissions. Causes of action arising out of Consultant's Services or this Agreement regardless of cause(s) or the theory of liability, including negligence, indemnity or other recovery shall be deemed to have accrued and the applicable statute of limitations shall commence to run not later than the date of Consultant's substantial completion of Services on the project.
8. **Warranty.** Consultant will perform the Services in a manner consistent with that level of care and skill ordinarily exercised by members of the profession currently practicing under similar conditions in the same locale. **EXCEPT FOR THE STANDARD OF CARE PREVIOUSLY STATED, CONSULTANT MAKES NO WARRANTIES OR GUARANTEES, EXPRESS OR IMPLIED, RELATING TO CONSULTANT'S SERVICES AND CONSULTANT DISCLAIMS ANY IMPLIED WARRANTIES OR WARRANTIES IMPOSED BY LAW, INCLUDING WARRANTIES OF MERCHANTABILITY AND FITNESS FOR A PARTICULAR PURPOSE.**
9. **Insurance.** Consultant represents that it now carries, and will continue to carry: (i) workers' compensation insurance in accordance with the laws of the states having jurisdiction over Consultant's employees who are engaged in the Services, and employer's liability insurance ($1,000,000); (ii) commercial general liability insurance ($2,000,000 occ / $4,000,000 agg); (iii) automobile liability insurance ($2,000,000 B.I. and P.D. combined single limit); (iv) umbrella liability ($5,000,000 occ / agg); and (v) professional liability insurance ($1,000,000 claim / agg). Certificates of insurance will be provided upon request. Client and Consultant shall waive subrogation against the other party on all general liability and property coverage.

10. **CONSEQUENTIAL DAMAGES.** **NEITHER PARTY SHALL BE LIABLE TO THE OTHER FOR LOSS OF PROFITS OR REVENUE; LOSS OF USE OR OPPORTUNITY; LOSS OF GOOD WILL; COST OF SUBSTITUTE FACILITIES, GOODS, OR SERVICES; COST OF CAPITAL; OR FOR ANY SPECIAL, CONSEQUENTIAL, INDIRECT, PUNITIVE, OR EXEMPLARY DAMAGES.**
11. **Dispute Resolution.** Client shall not be entitled to assert a Claim against Consultant based on any theory of professional negligence unless and until Client has obtained the written opinion from a registered, independent, and reputable engineer, architect, or geologist that Consultant has violated the standard of care applicable to Consultant's performance of the Services. Client shall provide this opinion to Consultant and the parties shall endeavor to resolve the dispute within 30 days, after which Client may pursue its remedies at law. This Agreement shall be governed by and construed according to Kansas law.
12. **Subsurface Explorations.** Subsurface conditions throughout the site may vary from those depicted on logs of discrete borings, test pits, or other exploratory services. Client understands Consultant's layout of boring and test locations is approximate and that Consultant may deviate a reasonable distance from those locations. Consultant will take reasonable precautions to reduce damage to the site when performing Services; however, Client accepts that invasive services such as drilling or sampling may damage or alter the site. Site restoration is not provided unless specifically included in the Services.
13. **Testing and Observations.** Client understands that testing and observation are discrete sampling procedures, and that such procedures indicate conditions only at the depths, locations, and times the procedures were performed. Consultant will provide test results and opinions based on tests and field observations only for the work tested. Client understands that testing and observation are not continuous or exhaustive, and are conducted to reduce - not eliminate - project risk. Client shall cause all tests and inspections of the site, materials, and Services performed by Consultant to be timely and properly scheduled in order for the Services to be performed in accordance with the plans, specifications, contract documents, and Consultant's recommendations. No claims for loss or damage or injury shall be brought against Consultant by Client or any third party unless all tests and inspections have been so performed and Consultant's recommendations have been followed. Unless otherwise stated in the Proposal, Client assumes sole responsibility for determining whether the quantity and the nature of Services ordered by Client is adequate and sufficient for Client's intended purpose. Client is responsible (even if delegated to contractor) for requesting services, and notifying and scheduling Consultant so Consultant can perform these Services. Consultant is not responsible for damages caused by Services not performed due to a failure to request or schedule Consultant's Services. Consultant shall not be responsible for the quality and completeness of Client's contractor's work or their adherence to the project documents, and Consultant's performance of testing and observation services shall not relieve Client's contractor in any way from its responsibility for defects discovered in its work, or create a warranty or guarantee. Consultant will not supervise or direct the work performed by Client's contractor or its subcontractors and is not responsible for their means and methods. The extension of unit prices with quantities to establish a total estimated cost does not guarantee a maximum cost to complete the Services. The quantities, when given, are estimates based on contract documents and schedules made available at the time of the Proposal. Since schedule, performance, production, and charges are directed and/or controlled by others, any quantity extensions must be considered as estimated and not a guarantee of maximum cost.
14. **Sample Disposition, Affected Materials, and Indemnity.** Samples are consumed in testing or disposed of upon completion of the testing procedures (unless stated otherwise in the Services). Client shall furnish or cause to be furnished to Consultant all documents and information known or available to Client that relate to the identity, location, quantity, nature, or characteristic of any hazardous waste, toxic, radioactive, or contaminated materials ("Affected Materials") at or near the site, and shall immediately transmit new, updated, or revised information as it becomes available. Client agrees that Consultant is not responsible for the disposition of Affected Materials unless specifically provided in the Services, and that Client is responsible for directing such disposition. In no event shall Consultant be required to sign a hazardous waste manifest or take title to any Affected Materials. Client shall have the obligation to make all spill or release notifications to appropriate governmental agencies. The Client agrees that Consultant neither created nor contributed to the creation or existence of any Affected Materials conditions at the site and Consultant shall not be responsible for any claims, losses, or damages allegedly arising out of Consultant's performance of Services hereunder, or for any claims against Consultant as a generator, disposer, or arranger of Affected Materials under federal, state, or local law or ordinance.
15. **Ownership of Documents.** Work product, such as reports, logs, data, notes, or calculations, prepared by Consultant shall remain Consultant's property. Proprietary concepts, systems, and ideas developed during performance of the Services shall remain the sole property of Consultant. Files shall be maintained in general accordance with Consultant's document retention policies and practices.
16. **Utilities.** Unless otherwise stated in the Proposal, Client shall provide the location and/or arrange for the marking of private utilities and subterranean structures. Consultant shall take reasonable precautions to avoid damage or injury to subterranean structures or utilities. Consultant shall not be responsible for damage to subterranean structures or utilities that are not called to Consultant's attention, are not correctly marked, including by a utility locate service, or are incorrectly shown on the plans furnished to Consultant.
17. **Site Access and Safety.** Client shall secure all necessary site related approvals, permits, licenses, and consents necessary to commence and complete the Services and will execute any necessary site access agreement. Consultant will be responsible for supervision and site safety measures for its own employees, but shall not be responsible for the supervision or health and safety precautions for any third parties, including Client's contractors, subcontractors, or other parties present at the site. In addition, Consultant retains the right to stop work without penalty at any time Consultant believes it is in the best interests of Consultant's employees or subcontractors to do so in order to reduce the risk of exposure to unsafe site conditions. Client agrees it will respond quickly to all requests for information made by Consultant related to Consultant's pre-task planning and risk assessment processes.

Consultant:	**Terracon Consultants, Inc.**	Client:	**City of Brownsville TX**
By:	Date: **7/13/2026**	By:	Date:
Name/Title:	**Jorge A. Flores / Office Manager III**	Name/Title:	Mr. Alan Guard-City Manager
Address:	**1506 Mid Cities Dr** **Pharr, TX 78577**	Address:	**1001 E. Elizabeth St.** **Brownsville, TX 78520**
Phone:	**(956) 283-8254** Fax:	Phone:	**(956) 561-3901** Fax:
Email:	**Jorge.Flores@terracon.com**	Email:	**alan.guard@brownsvilletx.gov**

APPROVED as to form and legality
By Criselda Ivon Rincon Flores at 4:39 pm, Jul 14, 2026

DISTRIBUTION SHEET

Thank you for choosing Terracon Consultants, Inc. to provide these services. Please fill out below the pertinent information below so that we may expedite report distribution, project correspondence and invoice(s) to appropriate person (s). If you have any questions please do not hesitate to contact our office.

Project Name: _____

Client

Copies _____ Firm _____

Address _____

Attn: _____ P _____ F _____

Email: _____

Invoice (do not complete if same as client)

Copies _____ Firm _____

Address _____

Attn: _____ P ( ) _____ F ( ) _____

Email: _____

Report Distribution (Clients, Architects, Engineers, Contractors, etc...)

Copies _____ Firm _____

Address _____

Attn: _____ P ( ) _____ F ( ) _____

Email: _____

Copies _____ Firm _____

Address _____

Attn: _____ P ( ) _____ F ( ) _____

Email: _____

Copies _____ Firm _____

Address _____

Attn: _____ P ( ) _____ F ( ) _____

Email: _____

Copies _____ Firm _____

Address _____

Attn: _____ P ( ) _____ F ( ) _____

Email: _____

Copies _____ Firm _____

Address _____

Attn: _____ P ( ) _____ F ( ) _____

Email: _____

Copies _____ Firm _____

Address _____

Attn: _____ P ( ) _____ F ( ) _____

Email: _____

If you need more room or would like to send other pertinent information please provide on the back of this sheet. Thank you for your time and concern to this matter.

INDEPENDENT CONTRACTOR AGREEMENT
FOR A TERM CONTRACT FOR GEOTECHNICAL AND CONSTRUCTION MATERIAL TESTING SERVICE ON A PRE-APPROVED VENDOR LIST FOR STREET AND DRAINAGE IMPROVEMENT PROJECTS AND MISCELLANEOUS PROJECTS FOR THE CITY OF BROWNSVILLE
RFQ GTS-67-0622

This Agreement is entered into as of Tuesday, September 20, 2022, between THE CITY OF BROWNSVILLE ("CITY") and. Terracon Consultants, Inc. ("CONTRACTOR").

1. Documents

(a) The following documents (collectively, "Contract Documents") are hereby incorporated into and made part of this Agreement.

i. Scope of Services to be performed by Contractor and fee structure (Exhibit A)

ii. Term on Contract (Exhibit B)

iii. Required Contract Provisions (Exhibit C)

iv. Certificate of Insurance (Exhibit D)

2. Scope of Services: The Contractor shall perform the following services in a professional manner:

(a) Contractor shall perform all those services as necessary and as described in Exhibit A.

(b) Contractor will perform such services related to the Project in a diligent and workmanlike manner consistent with industry standards and in accordance with the schedule, if any, set forth in the Contract Documents.

(c) By signing this Agreement, Contractor represents that it has thoroughly reviewed the Contract Documents incorporated into this Agreement by reference and that it accepts the description of the Project and the conditions under which the Project is to be performed and completed.

3. Independent Contractor; Personnel

(a) Contractor enters into this Agreement as, and shall continue to be, an independent contractor. All Services shall be performed only by Contractor and Contractor's employees. Under no circumstances shall Contractor , or any of Contractor's employees, look to City as his/her employer, or as a partner, agent or principal. Neither Contractor , nor any of Contractor's employees, shall be entitled to any benefits accorded to City's employees, including without limitation worker's compensation, disability insurance, vacation or sick pay. Contractor shall be responsible for providing, at Contractor's expense, and in Contractor's name, unemployment, disability, worker's compensation and other insurance, as well as any and all licenses and permits usual or necessary for conducting the Services. Contractor shall be responsible for paying all applicable local, state and federal taxes.

(b) Contractor represents and warrants to City that its employees performing work hereunder will have sufficient expertise, training, licensure (if applicable) and experience to accomplish the Services.

(c) Contractor shall not subcontract any portion of the work required by this Agreement, except as provided in the Contract Documents. City may terminate this Agreement, effective immediately, if there is any assignment, or attempted assignment, transfer, or encumbrance, by Contractor of this Agreement or any right or interest herein without City's written consent. In the event Contractor engages any subcontractor in the performance of this Agreement, Contractor shall ensure that all of Contractor's subcontractors perform in accordance with the terms and conditions of this Agreement. Contractor shall be fully

responsible for all of Contractor's subcontractors' performance, and liable for any of Contractor's subcontractors' non-performance and all of Contractor's subcontractors' acts and omissions.

4. Term of Contract

Contract will commence upon City Commission approval and shall expire three years from date of approval. The City of Brownsville reserves the unilateral right to extend the life of the contract for two (2) periods of one (1) year each thereafter: if mutually acceptable to the contractor and the City of Brownsville.

5. Compensation.

(a) Contractor agrees to provide the services and/or materials as specified in the Contract Documents at the cost specified in Exhibit A. It is acknowledged and agreed by Contractor that this amount is the maximum payable and constitutes a limitation upon City's obligation to compensate Contractor for Contractor's services pursuant and related to this Agreement. This maximum amount, however, does not constitute a limitation of any sort upon Contractor's obligation to perform all items of work required by or which can be reasonably inferred from the Scope of Service.

(b) Contractor may submit invoices for compensation no more often than monthly, but only after the services for which the invoices are submitted have been completed. An original invoice plus one copy are due within fifteen (15) days of the end of the month except the final invoice which must be received no later than sixty (60) days after this Agreement expires. Invoices shall designate the nature of the services performed and/or the goods provided. Notwithstanding any provision of this Agreement to the contrary, City may withhold, in whole or in part, payment to the extent necessary to protect itself from loss on account of inadequate or defective work that has not been remedied or resolved in a manner satisfactory to the City's Contract Administrator or failure to comply with this Agreement. The amount withheld shall not be subject to payment of interest by City.

6. Insurance.

(a) The Contractor shall furnish proof of insurance requirements as indicated below. The coverage is to remain in force at all times during the contract period. The following minimum insurance coverage is required. The commercial general liability insurance policy shall name the City of Brownsville, Texas, as an "additional insured." This MUST be written in the description section of the insurance certificate, even if there is a check-off box on the insurance certificate. Any costs for adding the City as "additional insured" shall be at the Contractor's expense.

(b) The City of Brownsville shall be given notice 10 days prior to cancellation or modification of any required insurance. The insurance provided shall be endorsed or amended to comply with this notice requirement. In the event that the insurer is unable to accommodate, it shall be the responsibility of the Contractor to provide the proper notice. Such notification will be in writing by registered mail, return receipt requested and addressed to the Procurement Services Division.

(c) The Contractor's insurance must be provided by an A.M. Best's "A-"rated or better insurance company authorized to issue insurance policies in the State of Texas, subject to approval by the City of Brownsville Department of Safety and Risk Management. Any exclusions or provisions in the insurance maintained by the contractor that excludes coverage for work contemplated in this solicitation shall be deemed unacceptable and shall be considered breach of contract.

i. Workers' Compensation and Employers' Liability Insurance

Minimum Limits Consistent with Texas Worker's Compensation Act (Section 401):

1. $100,000 bodily injury each accident
2. $500,000 bodily injury by disease policy limit
3. $100,000 Bodily injury by disease each employee

Any firm performing work for or on behalf of the City of Brownsville must provide Workers' Compensation insurance.

ii. Commercial General Liability Insurance

Covering premises-operations, products-completed operations, independent contractors and contractual liability.

Limits: Combined single limit bodily injury/property damage $1,000,000.

This coverage must include, but not limited to:

1. Coverage for the liability assumed by the contractor under the indemnity provision of the contract.
2. Coverage for Premises/Operations
3. Products/Completed Operations
4. Broad Form Contractual Liability
5. Independent Contractors

iii. Professional Liability Insurance

Professional Liability Insurance in the amount not less than the projected total amount of the assigned project. This coverage will be adjusted to reflect the scope of work for each project.

iv. Automobile Liability Insurance

Covering all owned, hired and non-owned automobile equipment.

Limits:	Bodily injury	$250,000 each person, $500,000 each occurrence
	Property damage	$100,000 each occurrence

7. Termination.

(a) *Termination for Cause.* The aggrieved party may terminate this Agreement for cause if the party in breach has not corrected the breach within ten (10) days after written notice from the aggrieved party identifying the breach. The City Manager may also terminate this Agreement upon such notice as the City Manager deems appropriate under the circumstances in the event the City Manager determines that termination is necessary to protect the public health or safety. The parties agree that if the City erroneously, improperly or unjustifiably terminates for cause, such termination shall be deemed a termination for convenience, which shall be effective thirty (30) days after such notice of termination for cause is provided.

This Agreement may be terminated for cause for reasons including, but not limited to, Contractor's repeated (whether negligent or intentional) submission for payment of false or incorrect bills or invoices, failure to perform the Work to the City's satisfaction; or failure to continuously perform the work in a manner calculated to meet or accomplish the objectives as set forth in this Agreement.

(b) *Termination for Convenience.* The City reserves the right, in its best interest as determined by the City, to cancel this contract for convenience by giving written notice to the Contractor at least thirty (30) days prior to the effective date of such cancellation. In the event this Agreement is terminated for convenience, Contractor shall be paid for any services performed to the City's satisfaction pursuant to the Agreement through the termination date specified in the written notice of termination. Contractor acknowledges and agrees that he/she/it has received good, valuable and sufficient consideration from City, the receipt and adequacy of which are hereby acknowledged by Contractor , for City's right to terminate this Agreement for convenience.

(c) *Cancellation for Non-appropriated Funds.* The City reserves the right, in its best interest as determined by the City, to cancel this contract for non-appropriated funds or unavailability of funds by giving written notice to the Contractor at least thirty (30) days prior to the effective date of such cancellation. The obligation of the City for payment to a Contractor is limited to the availability of funds appropriated in a current fiscal period, and continuation of the contract into a subsequent fiscal period is subject to appropriation of funds, unless otherwise provided by law.

(d) *Force Majeure.* The City and Contractor will be excused from the performance of their respective obligations under this agreement when and to the extent that their performance is delayed or prevented by any circumstances beyond their control including, fire, flood, explosion, strikes or other labor disputes, act of God or public emergency, war, riot, civil commotion,

malicious damage, act or omission of any governmental authority, delay or failure or shortage of any type of transportation, equipment, or service from a public utility needed for their performance, provided that:

i. The non performing party gives the other party prompt written notice describing the particulars of the Force Majeure including, but not limited to, the nature of the occurrence and its expected duration, and continues to furnish timely reports with respect thereto during the period of the Force Majeure;

ii. The excuse of performance is of no greater scope and of no longer duration than is reasonably necessary when considered in light of the Force Majeure;

iii. No obligations of either party that arose before the Force Majeure causing the excuse of performance are excused as a result of the Force Majeure; and

iv. The non-performing party uses its best efforts to remedy its inability to perform.

v. Notwithstanding the above, performance shall not be excused under this Section for a period in excess of sixty (60) days, provided that in extenuating circumstances, the City may excuse performance for a longer term. Economic hardship of the Contractor will not constitute Force Majeure. The term of the agreement shall be extended by a period equal to that during which either party's performance is suspended under this Section.

8. Materiality and Waiver of Breach.

(a) City and Contractor agree that each requirement, duty, and obligation set forth herein is substantial and important to the formation of this Agreement and that each is, therefore, a material term hereof. City's failure to enforce any provision of this Agreement shall not be deemed a waiver of such provision or modification of this Agreement. A waiver of any breach of a provision of this Agreement shall not be deemed a waiver of any subsequent breach and shall not be construed to be a modification of the terms of this Agreement.

9. Indemnification by Consultant.

CONSULTANT AGREES TO DEFEND, INDEMNIFY AND HOLD THE CITY AND ITS RESPECTIVE OFFICERS, AGENTS AND EMPLOYEES, HARMLESS AGAINST ANY AND ALL CLAIMS, LAWSUITS, JUDGMENTS, FINES, PENAL TIES, COSTS AND EXPENSES FOR ALL PROPERTY DAMAGE OR OTHER HARM OR VIOLATIONS FOR WHICH RECOVERY OF DAMAGES, FINES, OR PENAL TIES IS SOUGHT, SUFFERED BY ANY PERSON OR PERSONS, THAT MAY ARISE OUT OF OR BE OCCASIONED BY CONSULTANT'S BREACH OF ANY OF THE TERMS OR PROVISIONS OF THIS CONTRACT, VIOLATIONS OF LAW, OR BY ANY NEGLIGENT, GROSSLY NEGLIGENT, INTENTIONAL, OR STRICTLY LIABLE ACT OR OMISSION OF THE CONSULTANT, ITS OFFICERS, AGENTS, EMPLOYEES, INVITEES, SUBCONTRACTORS, OR SUB- SUBCONTRACTORS AND THEIR RESPECTIVE OFFICERS, AGENTS, OR REPRESENTATIVES, OR ANY OTHER PERSONS OR ENTITIES FOR WHICH THE CONSULTANT IS LEGALLY RESPONSIBLE IN THE PERFORMANCE OF THIS CONTRACT. THE CITY DOES NOT WAIVE ANY GOVERNMENTAL IMMUNITY OR OTHER DEFENSES AVAILABLE TO IT UNDER TEXAS OR FEDERAL LAW. THE PROVISIONS OF THIS PARAGRAPH ARE SOLELY FOR THE BENEFIT OF THE PARTIES HERETO AND ARE NOT INTENDED TO CREATE OR GRANT ANY RIGHTS, CONTRACTUAL OR OTHERWISE, TO ANY OTHER PERSON OR ENTITY.

CONSULTANT AT ITS OWN EXPENSE IS EXPRESSLY REQUIRED TO DEFEND CITY AGAINST ALL SUCH CLAIMS. CITY RESERVES THE RIGHT TO PROVIDE A PORTION OR ALL OF ITS OWN DEFENSE; HOWEVER, CITY IS UNDER NO OBLIGATION TO DO SO. ANY SUCH ACTION BY CITY IS NOT TO BE CONSTRUED AS A WAIVER OF CONSULTANT'S OBLIGATION TO DEFEND CITY OR AS A WAIVER OF

CONSULTANT'S OBLIGATION TO INDEMNIFY CITY PURSUANT TO THIS AGREEMENT. CONSULTANT SHALL RETAIN DEFENSE COUNSEL WITHIN SEVEN (7} BUSINESS DAYS OF CITY'S WRITTEN NOTICE THAT CITY IS INVOKING ITS RIGHT TO INDEMNIFICATION UNDER THIS AGREEMENT. IF CONSULTANT FAILS TO RETAIN COUNSEL WITHIN THE REQUIRED TIME PERIOD, CITY SHALL HAVE THE RIGHT TO RETAIN

DEFENSE COUNSEL ON ITS OWN BEHALF AND CONSULTANT SHALL BE LIABLE FOR ALL COSTS INCURRED BY THE CITY.

10. Miscellaneous Provisions.

(a) *Successors and Assigns.* All of the provisions of this Agreement shall be binding upon and inure to the benefit of the parties hereto and their respective heirs, if any, successors, and assigns.

(b) *Choice of Law.* The laws of the state of Texas shall govern the validity of this Agreement, the construction of its terms and the interpretation of the rights and duties of the parties hereto.

(c) *No Waiver of Governmental Immunity.* NOTHING IN THIS SECTION SHALL BE CONSTRUED TO WAIVE CITY'S GOVERNMENTAL IMMUNITY FROM LAWSUIT, WHICH IMMUNITY IS EXPRESSLY RETAINED TO THE EXTENT IT IS NOT CLEARLY AND UNAMBIGUOUSLY WAIVED BY STATE LAW.

(d) *Assignment.* Contractor shall not assign any of Contractor's rights under this Agreement, or delegate the performance of any of Contractor's duties hereunder, without the prior written consent of the City.

(e) *Modification or Amendment.* No amendment, change or modification of this Agreement shall be valid unless in writing signed by the parties hereto.

(f) *Venue.* This Agreement and any and all matters arising directly or indirectly herefrom shall be governed by and construed and enforced in accordance with the Laws of the State of Texas, with the Federal and State Courts of Cameron County, Texas having jurisdiction. (b) If at any time there is a dispute between or among the Parties with respect to any matter arising directly or indirectly from this Agreement (an "Agreement Matter"), the Parties agree that, prior to seeking judicial remedy, they will engage in face-to-face negotiations in an attempt to resolve such dispute and shall, upon failing to negotiate a mutually satisfactory resolution, choose a mutually agreeable neutral third party to mediate such dispute. Mediation shall be non-binding and shall be confidential.

Notices. Any and all notices, demands, or other communications required or desired to be given hereunder by any party shall be in writing and shall be validly given or made to another party if personally served, or if deposited in the United States mail, certified or registered, postage prepaid, return receipt requested. If such notice or demand is served personally, notice shall be deemed constructively made at the time of such personal service. If such notice, demand or other communication is given by mail, such notice shall be conclusively deemed given five days after deposit thereof in the United States mail addressed to the party to whom such notice, demand or other communication is to be given as follows:

If to Contractor: Terracon Consultants Inc.
1506 Mid Cities Dr.
Pharr, TX, 78577

If to City: City of Brownsville
1001 East Elizabeth St.
Brownsville, TX, 78520

Any party hereto may change its address for purposes of this paragraph by written notice given in the manner provided above.

(g) *Entire Understanding.* This document and any exhibit attached constitute the entire understanding and agreement of the parties, and any and all prior agreements, understandings, and representations are hereby terminated and canceled in their entirety and are of no further force and effect.

(h) *Unenforceability of Provisions.* If any provision of this Agreement, or any portion thereof, is held to be invalid and unenforceable, then the remainder of this Agreement shall nevertheless remain in full force and effect.

IN WITNESS WHEREOF the undersigned have executed this Agreement as of the day and year first written above.

CITY OF BROWNSVILLE

Signature: _____

Print Name: Trey Mender

Title: Mayor

Date: 10/02/2022

CONTRACTOR

Signature: _____

Print Name: Jorge A. Flores, P.G.

Title: Senior Principal/Office Manager

Date: 8-29-2022

Exhibit A

City of Brownsville Geotechnical Fee Schedule

Item Description	Unit	Rate	Prices have been confirmed unless otherwise noted.
CMT SERVICES - (Plasticity Index)	ea	$ 90.00	
CMT SERVICES - Standard Proctor (Moisture-Density Relationship)	ea	$ 250.00	
CMT SERVICES - In-place Density Tests	ea	$ 25.00	
CMT SERVICES - In-place asphalt cores (min. 3) 2" diameter	ea	$ 115.00	
CMT SERVICES - In-place asphalt cores (min. 3) 4" diameter	ea	$ 120.00	
CMT SERVICES - Compressive Strength Concrete Cyl (Incl. tech time, Min. 4)	ea	$ 75.00	
CMT SERVICES - Technician Standy-by Time	hr	$ 60.00	
CMT SERVICES - Trip Charge	ea	$ 60.00	
CMT SERVICES - Cylinder pick-up trip charge	ea	$ 300.00	Cylinder pick-up trip charge- if unit can be changed to hr it is $60
CMT SERVICES - Concrete Coring (4" diameter, Min. 4)	ea	$ 117.50	
CMT SERVICES - Sieve Analysis	ea	$ 120.00	
CMT SERVICES - Grout Compressive Strenght (4 Min)	ea	$ 20.00	
CMT SERVICES - Texas Triaxial	set	$ 1,900.00	
ASPHALT TESTING-Extraction –Gradation	ea	$ 200.00	
ASPHALT TESTING-Molding of Sample (Min. 3)	set	$ 185.00	
ASPHALT TESTING-Stability (Min. 3)	ea	$ 82.00	
ASPHALT TESTING-Asph Mix Des (Haveem Method)	set	$ 350.00	
ASPHALT TESTING-Lab. Molded Specific Gravity	ea	$ 185.00	
ASPHALT TESTING-Specific Gravity of Cored Samples	ea	$ 50.00	
ASPHALT TESTING-Rolling Pattern (2 HR Max. w/densities)	hr	$ 75.00	
EXISTING PAV INVESTIGATION - Core Exist Asph Pav: (Min. 3) Asphalt thickness, Caliche Base PI, Caliche Base Gradation, Subgrade PI	ea	$ 3,000.00	Includes: Coring Rig, Generator, Sieve Analysis, Plastic Index, -200 Sieve ,Bit wear, Patching, DCP, Technician, Trip, PE, CME Manager / Grad Eng.
GEO TECH LAB SERVICE -% Passing No. 200 Sieve	ea	$ 90.00	
GEO TECH LAB SERVICE-Moisture Content	ea	$ 25.00	
GEO TECH LAB SERVICE-Mortar Cube Compressive Strength (min.6)	ea	$ 25.00	
GEO TECH LAB SERVICE-Optimum Lime (PI)	ea	$ 540.00	
GEOTECH FIELD SRVC - Soil Test Boring 0 – 50 feet	ft	$ 15.00	
GEOTECH FIELD SRVC - Soil Test Boring 50 – 100 feet	ft	$ 20.00	
GEOTECH FIELD SRVC - Soil Test Boring, Wet Rotary	ft	$ 17.00	
GEOTECH FIELD SRVC - TxDOT-Texas Cone Penetrometer Test	ft	$ 22.00	
GEOTECH FIELD SRVC - Field Logging Services	hr	$ 75.00	
GEOTECH FIELD SRVC - Field Coordination	hr	$ 100.00	

GEOTECH FIELD SRVC - Mobilization (Lump Sum)	ea	$ 600.00	
GEOTECH FIELD SRVC - Concrete/Asphalt Pavement Patch	ea	$ 40.00	
GEOTECH FIELD SRVC - Plugging of Holes	ft	$ 8.00	
GEOTECH FIELD SRVC - Stand-by Time	hr	$ 350.00	
GEOTECH FIELD SRVC - Standard Penetration Test (SPT)	ea	$ 9.00	
GEOTECH FIELD SRVC - Shelby Tube Un-Disturbed Samples	ea	$ 115.00	
GEOTECH LAB SRVC - Sand Equivalent	ea	$ 110.00	
GEOTECH LAB SRVC - Linear Shrinkage	ea	$ 135.00	
GEOTECH LAB SRVC - PH	ea	$ 55.00	
GEOTECH LAB SRVC - Resistivity	ea	$ 305.00	
GEOTECH LAB SRVC - PH and Resisitivity	ea	$ 360.00	
GEOTECH LAB SRVC - Optimum Lime (pH)	ea	$ 330.00	
GEOTECH LAB SRVC - Max. Theo. Specific Gravity	ea	$ 115.00	
GEOTECH LAB SRVC - Specific Gravity	ea	$ 50.00	
GEOTECH LAB SRVC - Loose Unit Weight	ea	$ 50.00	
GEOTECH LAB SRVC - Rodded Unit Weight	ea	$ 50.00	
GEOTECH LAB SRVC - Split Tensile Strength of Concrete Cylinder (min. 2)	ea	$ 30.00	
GEOTECH LAB SRVC - Sawing of Cylinder Ends (Prep.)	ea	$ 5.00	
GEOTECH LAB SRVC - Wet Ball Mill	ea	$ 285.00	
GEOTECH LAB SRVC - Sulfate Content	ea	$ 105.00	
GEOTECH LAB SRVC - Corrositivity (pH, Resistivity, Sulfate & Chloride)	ea	$ 455.00	
GEOTECH LAB SRVC - Sieve Analysis (Up to No. 40 Sieve)	ea	$ 120.00	
GEOTECH LAB SRVC - Hydrometer	ea	$ 285.00	
GEOTECH LAB SRVC - Sieve and Hydrometer (All Sieves)	ea	$ 370.00	
GEOTECH LAB SRVC - Unit Dry Weight (Density)	ea	$ 15.00	
GEOTECH LAB SRVC - Constant Head Permeability, In Situ	ea	$ 200.00	
GEOTECH LAB SRVC - Unconfined Compression (Soil)	ea	$ 75.00	
GEOTECH LAB SRVC - Triaxial Compression, UU (Multi-Stage -Revised)	ea	$ 350.00	
GEOTECH LAB SRVC - Triaxial Compression, CD	ea	$ 275.00	
GEOTECH LAB SRVC - Direct Shear, UU	ea	$ 275.00	
GEOTECH LAB SRVC - Consolidation	ea	$ 600.00	
GEOTECH LAB SRVC - Swell Test, (Method A - Revised)	ea	$ 275.00	
GEOTECH LAB SRVC - Swell Test, (Method B - Revised)	ea	$ 275.00	
LAB TEST - Flexural Strength of Concrete Beams (Min. 3)	ea	$ 55.00	
LAB TEST - California Bearing Ratio (CBR)	set	$ 1,100.00	
ENGINEERING SERVICES - P.E.	hr	$ 185.00	
ENGINEERING SERVICES - E.I.T., Graduate Engineer	hr	$ 110.00	
ENGINEERING SERVICES - Draftsmen	hr	$ 65.00	
ENGINEERING SERVICES - Clerical	hr	$ 55.00	
ENGINEERING SERVICES - Technician	hr	$ 60.00	
ENGINEERING SERVICES - Geologist	hr	$ 160.00	

ENGINEERING SERVICES - Administrative Fee	hr	$ 55.00	
ENGINEERING SERVICES - Prof. Inspection (Welding, Steel, Etc.)	hr	$ 125.00	
ENGINEERING SRVC - PEIZOMETER/MONITORING WELL -	ea	na	
ENGINEERING SRVC - FLOOR FLATNESS TESTING -	ea	$ 800.00	
ENGINEERING SRVC - CONSTANT HEAD PERMEABILITY, UNDISTURBED -	ea	$ 235.00	

Exhibit B

Contract will commence upon City Commission approval and shall expire three years from date of approval. The City of Brownsville reserves the unilateral right to extend the life of the contract for two (2) periods of one (1) year each thereafter: if mutually acceptable to the contractor and the City of Brownsville.

REQUIRED CONTRACT PROVISIONS

2 CFR 200.327 Contract provisions. The non-Federal entity's contracts should contain applicable provisions described in Appendix II to Part 200—Contract Provisions for non-Federal Entity Contracts Under Federal Awards. The non-Federal entity's contracts must contain the provisions described in Appendix II to Part 200—Contract Provisions for non-Federal Entity Contracts Under Federal Awards, as applicable. ***Language as of March 28, 2022.**

All Contracts

THRESHOLD	PROVISION	CITATION
>$250,000 (Simplified Acquisition Threshold)	Contracts for more than the simplified acquisition threshold, which is the inflation adjusted amount determined by the Civilian Agency Acquisition Council and the Defense Acquisition Regulations Council (Councils) as authorized by 41 U.S.C. 1908, must address administrative, contractual, or legal remedies in instances where contractors violate or breach contract terms, and provide for such sanctions and penalties as appropriate.	2 CFR 200 APPENDIX II (A)
>$10,000	All contracts in excess of $10,000 must address termination for cause and for convenience by the non-Federal entity including the manner by which it will be effected and the basis for settlement.	2 CFR 200 APPENDIX II (B)
None	Equal Employment Opportunity. Except as otherwise provided under 41 CFR Part 60, all contracts that meet the definition of "federally assisted construction contract" in 41 CFR Part 60-1.3 must include the equal opportunity clause provided under 41 CFR 60-1.4(b), in accordance with Executive Order 11246, "Equal Employment Opportunity" (30 FR 12319, 12935, 3 CFR Part, 1964-1965 Comp., p. 339), as amended by Executive Order 11375, "Amending Executive Order 11246 Relating to Equal Employment Opportunity," and implementing regulations at 41 CFR part 60, "Office of Federal Contract Compliance Programs, Equal Employment Opportunity, Department of Labor." 41 CFR 60-1.4 Equal opportunity clause. (b) Federally assisted construction contracts. (1) Except as otherwise provided, each administering agency shall require the inclusion of the following language as a condition of any grant, contract, loan, insurance, or guarantee involving federally assisted construction which is not exempt from the requirements of the equal opportunity clause: The [recipient] hereby agrees that it will incorporate or cause to be incorporated into any contract for construction work, or modification thereof, as defined in the regulations of the Secretary of Labor at 41 CFR Chapter 60, which is paid for in whole or in part with funds obtained from the Federal Government or borrowed on the credit of the Federal Government pursuant to a grant, contract, loan, insurance, or guarantee, or undertaken pursuant to any Federal program involving such grant, contract, loan, insurance, or guarantee, the following equal opportunity clause: During the performance of this contract, the contractor agrees as follows:	2 CFR 200 APPENDIX II I and 41 CFR §60-1.4(b)

	(1) The contractor will not discriminate against any employee or applicant for employment because of race, color, religion, sex, sexual orientation, gender identity, or national origin. The contractor will take affirmative action to ensure that applicants are employed, and that employees are treated during employment without regard to their race, color, religion, sex, sexual orientation, gender identity, or national origin. Such action shall include, but not be limited to the following: Employment, upgrading, demotion, or transfer; recruitment or recruitment advertising; layoff or termination; rates of pay or other forms of compensation; and selection for training, including apprenticeship. The contractor agrees to post in conspicuous places, available to employees and applicants for employment, notices to be provided setting forth the provisions of this nondiscrimination clause. (2) The contractor will, in all solicitations or advertisements for employees placed by or on behalf of the contractor, state that all qualified applicants will receive consideration for employment without regard to race, color, religion, sex, sexual orientation, gender identity, or national origin. (3) The contractor will not discharge or in any other manner discriminate against any employee or applicant for employment because such employee or applicant has inquired about, discussed, or disclosed the compensation of the employee or applicant or another employee or applicant. This provision shall not apply to instances in which an employee who has access to the compensation information of other employees or applicants as a part of such employee's essential job functions discloses the compensation of such other employees or applicants to individuals who do not otherwise have access to such information, unless such disclosure is in response to a formal complaint or charge, in furtherance of an investigation, proceeding, hearing, or action, including an investigation conducted by the employer, or is consistent with the contractor's legal duty to furnish information. (4) The contractor will send to each labor union or representative of workers with which he has a collective bargaining agreement or other contract or understanding, a notice to be provided advising the said labor union or workers' representatives of the contractor's commitments under this section, and shall post copies of the notice in conspicuous places available to employees and applicants for employment. (5) The contractor will comply with all provisions of Executive Order 11246 of September 24, 1965, and of the rules, regulations, and relevant orders of the Secretary of Labor. (6) The contractor will furnish all information and reports required by Executive Order 11246 of September 24, 1965, and by rules, regulations, and orders of the Secretary of Labor, or pursuant thereto, and will permit access to his books, records, and accounts by the administering agency and the Secretary of Labor for purposes of investigation to ascertain compliance with such rules, regulations, and orders. (7) In the event of the contractor's noncompliance with the nondiscrimination clauses of this contract or with any of the said rules, regulations, or orders, this contract may be canceled, terminated, or	

	suspended in whole or in part and the contractor may be declared ineligible for further Government contracts or federally assisted construction contracts in accordance with procedures authorized in Executive Order 11246 of September 24, 1965, and such other sanctions may be imposed and remedies invoked as provided in Executive Order 11246 of September 24, 1965, or by rule, regulation, or order of the Secretary of Labor, or as otherwise provided by law. (8) The contractor will include the portion of the sentence immediately preceding paragraph (1) and the provisions of paragraphs (1) through (8) in every subcontract or purchase order unless exempted by rules, regulations, or orders of the Secretary of Labor issued pursuant to section 204 of Executive Order 11246 of September 24, 1965, so that such provisions will be binding upon each subcontractor or vendor. The contractor will take such action with respect to any subcontract or purchase order as the administering agency may direct as a means of enforcing such provisions, including sanctions for noncompliance: Provided, however, that in the event a contractor becomes involved in, or is threatened with, litigation with a subcontractor or vendor as a result of such direction by the administering agency, the contractor may request the United States to enter into such litigation to protect the interests of the United States. The [recipient] further agrees that it will be bound by the above equal opportunity clause with respect to its own employment practices when it participates in federally assisted construction work: Provided, that if the [recipient] so participating is a State or local government, the above equal opportunity clause is not applicable to any agency, instrumentality or subdivision of such government which does not participate in work on or under the contract. The recipient] agrees that it will assist and cooperate actively with the administering agency and the Secretary of Labor in obtaining the compliance of contractors and subcontractors with the equal opportunity clause and the rules, regulations, and relevant orders of the Secretary of Labor, that it will furnish the administering agency and the Secretary of Labor such information as they may require for the supervision of such compliance, and that it will otherwise assist the recipientring agency in the discharge of the agency's primary responsibility for securing compliance. The recipient further agrees that it will refrain from entering into any contract or contract modification subject to Executive Order 11246 of September 24, 1965, with a contractor debarred from, or who has not demonstrated eligibility for, Government contracts and federally assisted construction contracts pursuant to the Executive Order and will carry out such sanctions and penalties for violation of the equal opportunity clause as may be imposed upon contractors and subcontractors by the administering agency or the Secretary of Labor pursuant to Part II, Subpart D of the Executive Order. In addition, the [recipient] agrees that if it fails or refuses to comply with these undertakings, the administering agency may take any or all of the following actions: Cancel, terminate, or	

	suspend in whole or in part this grant (contract, loan, insurance, guarantee); refrain from extending any further assistance to the [recipient] under the program with respect to which the failure or refund occurred until satisfactory assurance of future compliance has been received from such [recipient]; and refer the case to the Department of Justice for appropriate legal proceedings.	
>$10,000,000 for ARPA but State Provision Applies at any amount. Applies to all public works projects	Davis-Bacon Act, as amended (40 U.S.C. 3141-3148). When required by Federal program legislation, all prime construction contracts in excess of $10,000,00 awarded by non-Federal entities must include a provision for compliance with the Davis-Bacon Act (40 U.S.C. 3141-3144, and 3146-3148) as supplemented by Department of Labor regulations (29 CFR Part 5, "Labor Standards Provisions Applicable to Contracts Covering Federally Financed and Assisted Construction"). In accordance with the statute, contractors must be required to pay wages to laborers and mechanics at a rate not less than the prevailing wages specified in a wage determination made by the Secretary of Labor. In addition, contractors must be required to pay wages not less than once a week. The non-Federal entity must place a copy of the current prevailing wage determination issued by the Department of Labor in each solicitation. The decision to award a contract or subcontract must be conditioned upon the acceptance of the wage determination. The non-Federal entity must report all suspected or reported violations to the Federal awarding agency. The contracts must also include a provision for compliance with the Copeland "Anti-Kickback" Act (40 U.S.C. 3145), as supplemented by Department of Labor regulations (29 CFR Part 3, "Contractors and Subcontractors on Public Building or Public Work Financed in Whole or in Part by Loans or Grants from the United States"). The Act provides that each contractor or subrecipient must be prohibited from inducing, by any means, any person employed in the construction, completion, or repair of public work, to give up any part of the compensation to which he or she is otherwise entitled. The non-Federal entity must report all suspected or reported violations to the Federal awarding agency.	2 CFR 200 APPENDIX II (D)
>$100,000	Contract Work Hours and Safety Standards Act (40 U.S.C. 3701-3708). Where applicable, all contracts awarded by the non-Federal entity in excess of $100,000 that involve the employment of mechanics or laborers must include a provision for compliance with 40 U.S.C. 3702 and 3704, as supplemented by Department of Labor regulations (29 CFR Part 5). Under 40 U.S.C. 3702 of the Act, each contractor must be required to compute the wages of every mechanic and laborer on the basis of a standard work week of 40 hours. Work in excess of the standard work week is permissible provided that the worker is compensated at a rate of not less than one and a half times the basic rate of pay for all hours worked in excess of 40 hours in the work week. The requirements of 40 U.S.C. 3704 are applicable to construction work and provide that no laborer or mechanic must be required to work in surroundings or under working conditions which are unsanitary, hazardous or dangerous. These requirements do not apply to the purchases of supplies or materials or articles ordinarily available on the open market, or contracts for transportation or transmission of intelligence.	2 CFR 200 APPENDIX II I

None	Rights to Inventions Made Under a Contract or Agreement. If the Federal award meets the definition of "funding agreement" under 37 CFR § 401.2 (a) and the recipient or subrecipient wishes to enter into a contract with a small business firm or nonprofit organization regarding the substitution of parties, assignment or performance of experimental, developmental, or research work under that "funding agreement," the recipient or subrecipient must comply with the requirements of 37 CFR Part 401, "Rights to Inventions Made by Nonprofit Organizations and Small Business Firms Under Government Grants, Contracts and Cooperative Agreements," and any implementing regulations issued by the awarding agency.	2 CFR 200 APPENDIX II (F)
>$150,000	Clean Air Act (42 U.S.C. 7401-7671q.) and the Federal Water Pollution Control Act (33 U.S.C. 1251-1387), as amended – Contracts and subgrants of amounts in excess of $150,000 must contain a provision that requires the non-Federal award to agree to comply with all applicable standards, orders or regulations issued pursuant to the Clean Air Act (42 U.S.C. 7401-7671q) and the Federal Water Pollution Control Act as amended (33 U.S.C. 1251-1387). Violations must be reported to the Federal awarding agency and the Regional Office of the Environmental Protection Agency (EPA).	2 CFR 200 APPENDIX II (G)
>$25,000	Debarment and Suspension (Executive Orders 12549 and 12689) – A contract award (see 2 CFR 180.220) must not be made to parties listed on the governmentwide exclusions in the System for Award Management (SAM), in accordance with the OMB guidelines at 2 CFR 180 that implement Executive Orders 12549 (3 CFR part 1986 Comp., p. 189) and 12689 (3 CFR part 1989 Comp., p. 235), "Debarment and Suspension." SAM Exclusions contains the names of parties debarred, suspended, or otherwise excluded by agencies, as well as parties declared ineligible under statutory or regulatory authority other than Executive Order 12549.	2 CFR 200 APPENDIX II (H)
>$100,000	Byrd Anti-Lobbying Amendment (31 U.S.C. 1352) – Contractors that apply or bid for an award exceeding $100,000 must file the required certification. Each tier certifies to the tier above that it will not and has not used Federal appropriated funds to pay any person or organization for influencing or attempting to influence an officer or employee of any agency, a member of Congress, officer or employee of Congress, or an employee of a member of Congress in connection with obtaining any Federal contract, grant or any other award covered by 31 U.S.C. 1352. Each tier must also disclose any lobbying with non-Federal funds that takes place in connection with obtaining any Federal award. Such disclosures are forwarded from tier to tier up to the non-Federal award.	2 CFR 200 APPENDIX II (I) and 24 CFR §570.303
	See 2 CFR §200.323.	2 CFR 200 APPENDIX II (J)
	See 2 CFR §200.216.	2 CFR 200 APPENDIX II (K)
	See 2 CFR §200.322.	2 CFR 200

		APPENDIX II (L)
>$10,000	An NFE (non-Federal Entity) that is a state agency or an agency of a political subdivision of a state, and the NFE's contractors must comply with Section 6002 of the Solid Waste Disposal Act.56 Applicable NFEs must include a contract provision requiring compliance with this requirement.57 This includes contracts awarded by a state agency or political subdivision of a state and its contractors for certain items, as designated by the EPA, with a purchase price greater than $10,000.58 Indian Tribal Governments and nonprofit organizations are not required to comply with this provision. Additional requirements are listed below.	2 CFR 200.323
None	Section 889(b)(1) of the John S. McCain National Defense Authorization Act for Fiscal Year 2019 (FY2019 NDAA) and 2 C.F.R. § 200.216, as implemented by FEMA Policy 405-143-1, Prohibitions on Expending FEMA Award Funds for Covered Telecommunications Equipment or Services (Interim), prohibit the obligation or expending of federal award funds on certain telecommunication products or from certain entities for national security reasons. Effective August 13, 2020, FEMA recipients and subrecipients, as well as their contractors and subcontractors, may not obligate or expend any FEMA award funds to: a. Procure or obtain any equipment, system, or service that uses covered telecommunications equipment or services as a substantial or essential component of any system, or as critical technology of any system; b. Enter into, extend, or renew a contract to procure or obtain any equipment, system, or service that uses covered telecommunications equipment or services as a substantial or essential component of any system, or as critical technology of any system; or c. Enter into, extend, or renew contracts with entities that use covered telecommunications equipment or services as a substantial or essential component of any system, or as critical technology as part of any system.	2 CFR 200.216
None	As appropriate and to the extent consistent with law, the non-Federal entity should, to the greatest extent practicable under a Federal award, provide a preference for the purchase, acquisition, or use of goods, products, or materials produced in the United States (including but not limited to iron, aluminum, steel, cement, and other manufactured products). The requirements of this section must be included in all subawards including all contracts and purchase orders for work or products under this award. For purposes of this section: (1) "Produced in the United States" means, for iron and steel products, that all manufacturing processes, from the initial melting stage through the application of coatings, occurred in the United States. (2) "Manufactured products" means items and construction materials composed in whole or in part of non-ferrous metals such as aluminum; plastics and polymer-based products such as polyvinyl chloride pipe; aggregates such as concrete; glass, including optical fiber; and lumber.	2 CFR 200.322(a)(b)(1) (2)

None	The Federal awarding agency must establish conflict of interest policies for Federal awards. The non-Federal entity must disclose in writing any potential conflict of interest to the Federal awarding agency or pass-through entity in accordance with applicable Federal awarding agency policy.	2 CFR 200.112
None	The Federal awarding agency and the non-Federal entity should, whenever practicable, collect, transmit, and store Federal award-related information in open and machine-readable formats rather than in closed formats or on paper in accordance with applicable legislative requirements. A machine-readable format is a format in a standard computer language (not English text) that can be read automatically by a web browser or computer system. The Federal awarding agency or pass-through entity must always provide or accept paper versions of Federal award-related information to and from the non-Federal entity upon request. If paper copies are submitted, the Federal awarding agency or pass-through entity must not require more than an original and two copies. When original records are electronic and cannot be altered, there is no need to create and retain paper copies. When original records are paper, electronic versions may be substituted through the use of duplication or other forms of electronic media provided that they are subject to periodic quality control reviews, provide reasonable safeguards against alteration, and remain readable.	2 CFR 200.336
None	Contracting with HUB, small and minority businesses, women's business enterprises, and labor surplus area firms. (a) The non-Federal entity must take all necessary affirmative steps to assure that minority businesses, women's business enterprises, and labor surplus area firms are used when possible. (b) Affirmative steps must include: (1) Placing qualified small and minority businesses and women's business enterprises on solicitation lists; (2) Assuring that small and minority businesses, and women's business enterprises are solicited whenever they are potential sources; (3) Dividing total requirements, when economically feasible, into smaller tasks or quantities to permit maximum participation by small and minority businesses, and women's business enterprises; (4) Establishing delivery schedules, where the requirement permits, which encourage participation by small and minority businesses, and women's business enterprises; (5) Using the services and assistance, as appropriate, of such organizations as the Small Business Administration and the Minority Business Development Agency of the Department of Commerce; and (6) Requiring the prime contractor, if subcontracts are to be let, to take the affirmative steps listed in paragraphs (b)(1) through (5) of this section.	2 CFR 200.321

None	Financial records, supporting documents, statistical records, and all other non-Federal entity records pertinent to a Federal award must be retained for a period of three years from the date of submission of the final expenditure report or, for Federal awards that are renewed quarterly or annually, from the date of the submission of the quarterly or annual financial report, respectively, as reported to the Federal awarding agency or pass-through entity in the case of a subrecipient. Federal awarding agencies and pass-through entities must not impose any other record retention requirements upon non-Federal entities. The only exceptions are the following: (a) If any litigation, claim, or audit is started before the expiration of the 3-year period, the records must be retained until all litigation, claims, or audit findings involving the records have been resolved and final action taken. (b) When the non-Federal entity is notified in writing by the Federal awarding agency, cognizant agency for audit, oversight agency for audit, cognizant agency for indirect costs, or pass-through entity to extend the retention period. (c) Records for real property and equipment acquired with Federal funds must be retained for 3 years after final disposition. (d) When records are transferred to or maintained by the Federal awarding agency or pass-through entity, the 3-year retention requirement is not applicable to the non-Federal entity. (e) Records for program income transactions after the period of performance. In some cases, recipients must report program income after the period of performance. Where there is such a requirement, the retention period for the records pertaining to the earning of the program income starts from the end of the non-Federal entity's fiscal year in which the program income is earned. (f) Indirect cost rate proposals and cost allocations plans. This paragraph applies to the following types of documents and their supporting records: Indirect cost rate computations or proposals, cost allocation plans, and any similar accounting computations of the rate at which a particular group of costs is chargeable (such as computer usage chargeback rates or composite fringe benefit rates). (1) *If submitted for negotiation.* If the proposal, plan, or other computation is required to be submitted to the Federal Government (or to the pass-through entity) to form the basis for negotiation of the rate, then the 3-year retention period for its supporting records starts from the date of such submission. (2) *If not submitted for negotiation.* If the proposal, plan, or other computation is not required to be submitted to the Federal Government (or to the pass-through entity) for negotiation purposes, then the 3-year retention period for the proposal, plan, or computation and its supporting records starts from the end of the fiscal year (or other accounting period) covered by the proposal, plan, or other computation.	2 CFR 200.334

None	CONTRACTS WITH COMPANIES ENGAGED IN BUSINESS WITH IRAN, SUDAN, OR FOREIGN TERRORIST ORGANIZATION PROHIBITED. A governmental entity may not enter into a governmental contract with a company that is identified on a list prepared and maintained under Section 806.051, 807.051, or 2252.153.The term "foreign terrorist organization" in this paragraph has the meaning assigned to such a term in Section 2252.151(2) of the Texas Government Code.	Texas Government Code 2252.152
>$100,000	PROVISION REQUIRED IN CONTRACT. (a) This section applies only to a contract that: (1) is between a governmental entity and a company with 10 or more full-time employees; and (2) has a value of $100,000 or more that is to be paid wholly or partly from public funds of the governmental entity. (b) A governmental entity may not enter into a contract with a company for goods or services unless the contract contains a written verification from the company that it: (1) does not boycott Israel; and (2) will not boycott Israel during the term of the contract.	Texas Government Code 2271
Option Contract Language for contracts awarded prior to Grant Award	The contract award is contingent upon the receipt of ARPA funds. If no such funds are awarded, the contract shall terminate.	Optional
	Mandatory standards and policies relating to energy efficiency which are contained in the state energy conservation plan issued in compliance with the Energy Policy and Conservation Act.	42 U.S.C. 6201
	The Firm agrees that no otherwise qualified individual with disabilities shall, solely by reason of his/her disability, be denied the benefits of, or be subjected to discrimination, including discrimination in employment, under any program or activity receiving federal financial assistance.	Section 504 of the Rehabilitation Act of 1973, as amended.

Insert System for Award Management (SAM) Record Search for company name and company principal

(Supplied by Proposal Responder/Bidder i.e. Vendor)

SAM.GOV®

TERRACON CONSULTANTS, INC.

ALERT! This entity is only available FOR OFFICIAL USE ONLY.

DUNS Unique Entity ID	SAM Unique Entity ID	CAGE / NCAGE
613569961	**MG15GZJ9BES5**	**1DJP8**
Purpose of Registration	Registration Status	Expiration Date
All Awards	**Active**	**Sep 13, 2022**
Physical Address	Mailing Address	
10841 S Ridgeview RD **Olathe, Kansas 66061-6456** **United States**	**10841 S Ridgeview RD** **Olathe, Kansas 66061-6456** **United States**	

Business Information

Doing Business as	Division Name	Division Number
(blank)	**(blank)**	**(blank)**
Congressional District	State / Country of Incorporation	URL
Kansas 03	**Delaware / United States**	**http://www.terracon.com**
MPIN		
********CON1**		

Registration Dates

Activation Date	Submission Date	Initial Registration Date
Sep 14, 2021	**Sep 13, 2021**	**Jan 15, 2002**

Entity Dates

Entity Start Date	Fiscal Year End Close Date
Apr 22, 1965	**Dec 31**

Immediate Owner

CAGE	Legal Business Name
7ELA3	**TSVC, INC.**

Highest Level Owner

CAGE	Legal Business Name
7E5X8	**T T COMPANIES, INC.**

Executive Compensation

In your business or organization's preceding completed fiscal year, did your business or organization (the legal entity to which this specific SAM record, represented by a DUNS number, belongs) receive both of the following: 1. 80 percent or more of your annual gross revenues in U.S. federal contracts, subcontracts, loans, grants, subgrants, and/or cooperative agreements and 2. $25,000,000 or more in annual gross revenues from U.S. federal contracts, subcontracts, loans, grants, subgrants, and/or cooperative agreements?

No

Does the public have access to information about the compensation of the senior executives in your business or organization (the legal entity to which this specific SAM record, represented by a DUNS number, belongs) through periodic reports filed under section 13(a) or 15(d) of the Securities Exchange Act of 1934 (15 U.S.C. 78m(a), 78o(d)) or section 6104 of the Internal Revenue Code of 1986?

Not Selected

Proceedings Questions

Is your business or organization, as represented by the DUNS Number on this entity registration, responding to a Federal procurement opportunity that contains the provision at FAR 52.209-7, subject to the clause in FAR 52.209-9 in a current Federal contract, or applying for a Federal grant opportunity which contains the award term and condition described in 2 C.F.R. 200 Appendix XII?

No

Does your business or organization, as represented by the DUNS number on this specific SAM record, have current active Federal contracts and/or grants with total value (including any exercised/unexercised options) greater than $10,000,000?

Not Selected

Within the last five years, had the business or organization (represented by the DUNS number on this specific SAM record) and/or any of its principals, in

finding of fault with either a monetary fine or penalty greater than $5,000 or reimbursement, restitution, or damages greater than $100,000, or other acknowledgment of fault?

Not Selected

Exclusion Summary

Active Exclusions Records?

No

SAM Search Authorization

I authorize my entity's non-sensitive information to be displayed in SAM public search results:

Yes

Entity Types

Business Types

Entity Structure	Entity Type	Organization Factors
Corporate Entity (Not Tax Exempt)	**Business or Organization**	**(blank)**

Profit Structure
For Profit Organization

Socio-Economic Types

Check the registrant's Reps & Certs, if present, under FAR 52.212-3 or FAR 52.219-1 to determine if the entity is an SBA-certified HUBZone small business concern. Additional small business information may be found in the SBA's Dynamic Small Business Search if the entity completed the SBA supplemental pages during registration.

Financial Information

Accepts Credit Card Payments	Debt Subject To Offset
Yes	**No**

EFT Indicator	CAGE Code
0000	**1DJP8**

Electronic Funds Transfer

Account Type	Routing Number	Lock Box Number
Financial Institution	Account Number	

Automated Clearing House

Phone (U.S.)	Email	Phone (non-U.S.)
Fax		

Remittance Address

Taxpayer Information

EIN	Type of Tax	Taxpayer Name
*****9917	**Applicable Federal Tax**	**TERRACON CONSULTANTS INC**
Tax Year (Most Recent Tax Year)	Name/Title of Individual Executing Consent	TIN Consent Date
2020	**Director Of Accounting**	**Sep 13, 2021**

Address
10841 S Ridgeview RD
Olathe, Kansas 66061

Points of Contact

Accounts Receivable POC

Wayne S Schweizer
Wayne.Schweizer@terracon.com
9135996886

Compliance
monica.curls@terracon.com
9132027528

United States

Jeff Davis, National Director of Federal Services
jeff.davis@terracon.com
9492795088

1421 Edinger AVE.
Tustin, California 92780
United States

Government Business

Monica Curls, Manager of Government Compliance
monica.curls@terracon.com
9132027528

10841 S. Ridgeview Road
Olathe, Kansas 66061
United States

Jeri Rease, Senior Corporate Marketing Strategist
jeri.rease@terracon.com
9139092728

10841 S. Ridgeview Road
Olathe, Kansas 66061
United States

Security Information

Company Security Level
(blank)

Highest Level Employee Security Level
(blank)

Service Classifications

NAICS Codes

Primary	NAICS Codes	NAICS Title
Yes	**541330**	**Engineering Services**
	541310	**Architectural Services**
	541350	**Building Inspection Services**
	541360	**Geophysical Surveying And Mapping Services**
	541380	**Testing Laboratories**
	541618	**Other Management Consulting Services**
	541620	**Environmental Consulting Services**
	541690	**Other Scientific And Technical Consulting Services**
	561210	**Facilities Support Services**
	561990	**All Other Support Services**
	562910	**Remediation Services**
	611430	**Professional And Management Development Training**
	712120	**Historical Sites**

Size Metrics

IGT Size Metrics

Annual Revenue (from all IGTs)
(blank)

Worldwide

Annual Receipts (in accordance with 13 CFR 121)
$791,485,020.00

Number of Employees (in accordance with 13 CFR 121)
5050

Location

Annual Receipts (in accordance with 13 CFR 121)
(blank)

Number of Employees (in accordance with 13 CFR 121)
(blank)

Industry-Specific

Electronic Data Interchange (EDI) Information

This entity did not enter the EDI information

Disaster Response

Yes, this entity appears in the disaster response registry.

Bonding Levels	Dollars
(blank)	**(blank)**

States
Any

Counties
(blank)

Metropolitan Statistical Areas
(blank)

Conflict of Interest Questionnaire – Form CIQ

CONFLICT OF INTEREST QUESTIONNAIRE — FORM CIQ

For vendor doing business with local governmental entity

OFFICE USE ONLY
Date Received

This questionnaire reflects changes made to the law by H.B. 23, 84th Leg., Regular Session.

This questionnaire is being filed in accordance with Chapter 176, Local Government Code, by a vendor who has a business relationship as defined by Section 176.001(1-a) with a local governmental entity and the vendor meets requirements under Section 176.006(a).

By law this questionnaire must be filed with the records administrator of the local governmental entity not later than the 7th business day after the date the vendor becomes aware of facts that require the statement to be filed. *See* Section 176.006(a-1), Local Government Code.

A vendor commits an offense if the vendor knowingly violates Section 176.006, Local Government Code. An offense under this section is a misdemeanor.

1 **Name of vendor who has a business relationship with local governmental entity.**

N/A

2 ☐ **Check this box if you are filing an update to a previously filed questionnaire.** (The law requires that you file an updated completed questionnaire with the appropriate filing authority not later than the 7th business day after the date on which you became aware that the originally filed questionnaire was incomplete or inaccurate.)

3 **Name of local government officer about whom the information is being disclosed.**

N/A

Name of Officer

4 **Describe each employment or other business relationship with the local government officer, or a family member of the officer, as described by Section 176.003(a)(2)(A). Also describe any family relationship with the local government officer. Complete subparts A and B for each employment or business relationship described. Attach additional pages to this Form CIQ as necessary.**

A. Is the local government officer or a family member of the officer receiving or likely to receive taxable income, other than investment income, from the vendor?

☐ Yes ☐ No

B. Is the vendor receiving or likely to receive taxable income, other than investment income, from or at the direction of the local government officer or a family member of the officer AND the taxable income is not received from the local governmental entity?

☐ Yes ☐ No

5 **Describe each employment or business relationship that the vendor named in Section 1 maintains with a corporation or other business entity with respect to which the local government officer serves as an officer or director, or holds an ownership interest of one percent or more.**

6 ☐ Check this box if the vendor has given the local government officer or a family member of the officer one or more gifts as described in Section 176.003(a)(2)(B), excluding gifts described in Section 176.003(a-1).

7 Jorge A. Flores, P.G. 7-11-22

Signature of vendor doing business with the governmental entity — Date

Form provided by Texas Ethics Commission — www.ethics.state.tx.us — Revised 11/30/2015

CONFLICT OF INTEREST QUESTIONNAIRE
For vendor doing business with local governmental entity

A complete copy of Chapter 176 of the Local Government Code may be found at http://www.statutes.legis.state.tx.us/Docs/LG/htm/LG.176.htm. For easy reference, below are some of the sections cited on this form.

Local Government Code § 176.001(1-a): "Business relationship" means a connection between two or more parties based on commercial activity of one of the parties. The term does not include a connection based on:

(A) a transaction that is subject to rate or fee regulation by a federal, state, or local governmental entity or an agency of a federal, state, or local governmental entity;

(B) a transaction conducted at a price and subject to terms available to the public; or

(C) a purchase or lease of goods or services from a person that is chartered by a state or federal agency and that is subject to regular examination by, and reporting to, that agency.

Local Government Code § 176.003(a)(2)(A) and (B):

(a) A local government officer shall file a conflicts disclosure statement with respect to a vendor if:

***

(2) the vendor:

(A) has an employment or other business relationship with the local government officer or a family member of the officer that results in the officer or family member receiving taxable income, other than investment income, that exceeds $2,500 during the 12-month period preceding the date that the officer becomes aware that

(i) a contract between the local governmental entity and vendor has been executed; or

(ii) the local governmental entity is considering entering into a contract with the vendor;

(B) has given to the local government officer or a family member of the officer one or more gifts that have an aggregate value of more than $100 in the 12-month period preceding the date the officer becomes aware that:

(i) a contract between the local governmental entity and vendor has been executed; or

(ii) the local governmental entity is considering entering into a contract with the vendor.

Local Government Code § 176.006(a) and (a-1)

(a) A vendor shall file a completed conflict of interest questionnaire if the vendor has a business relationship with a local governmental entity and:

(1) has an employment or other business relationship with a local government officer of that local governmental entity, or a family member of the officer, described by Section 176.003(a)(2)(A);

(2) has given a local government officer of that local governmental entity, or a family member of the officer, one or more gifts with the aggregate value specified by Section 176.003(a)(2)(B), excluding any gift described by Section 176.003(a-1); or

(3) has a family relationship with a local government officer of that local governmental entity.

(a-1) The completed conflict of interest questionnaire must be filed with the appropriate records administrator not later than the seventh business day after the later of:

(1) the date that the vendor:

(A) begins discussions or negotiations to enter into a contract with the local governmental entity; or

(B) submits to the local governmental entity an application, response to a request for proposals or bids, correspondence, or another writing related to a potential contract with the local governmental entity; or

(2) the date the vendor becomes aware:

(A) of an employment or other business relationship with a local government officer, or a family member of the officer, described by Subsection (a);

(B) that the vendor has given one or more gifts described by Subsection (a); or

(C) of a family relationship with a local government officer.

Instructions, searching existing data sources, gathering and maintaining the data needed, and completing and reviewing the collection of information. Send comments regarding the burden estimate or any other aspect of this collection of information, including suggestions for reducing this burden, to the Office of Management and Budget, Paperwork Reduction Project (0348-0046), Washington, DC 20503

Approved by OMB
0348-0046 N/A

Disclosure of Lobbying Activities

Complete this form to disclose lobbying activities pursuant to 31 U.S.C. 1352
(See reverse for public burden disclosure)

Type of Federal Action: a. contract ____ b. grant c. cooperative agreement d. loan e. loan guarantee f. loan insurance	**Status of Federal Action:** a. bid/offer/application _____ b. initial award c. post-award	**Report Type:** a. initial filing _____ b. material change
Name and Address of Reporting Entity: ____ Prime _____ Subawardee Tier_____, if Known: **Congressional District, if known:**		**If Reporting Entity in No. 4 is Subawardee,** Enter Name and Address of Prime: **Congressional District, if known:**
Federal Department/Agency:		**7. Federal Program Name/Description:** **CFDA Number,** *if applicable:*
Federal Action Number, *if known:*		**9. Award Amount,** *if known:* **$**
10. a. Name and Address of Lobbying Registrant *(if individual, last name, first name, MI):*		**b. Individuals Performing Services** *(including address if different from No. 10a)* *(last name, first name, MI):*
11. Information requested through this form is authorized by title 31 U.S.C. section 1352. This disclosure of lobbying activities is a material representation of fact upon which reliance was placed by the tier above when this transaction was made or entered into. This disclosure is required pursuant to 31 U.S.C. 1352. This information will be reported to the Congress semi-annually and will be available for public inspection. Any person who fails to file the required disclosure shall be subject to a civil penalty of not less than $10,000 and not more than $100,000 for each such failure.		**Signature:** 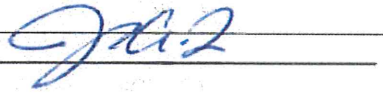 **Print Name:** Jorge A. Flores, P.G. **Title:** Senior Principal/Office Manager **Telephone No.:** 956-283-8254 **Date:** 8-29-2022
Federal Use Only		**Authorized for Local Reproduction** **Standard Form - LLL (Rev. 7-97)**

Form 2 - Statement Of Conflicts Of Interest (If Any)

Conflict of Interest Disclosure Instructions

The Respondent must disclose any conflicts of interest related to the goods and/or services associated with this solicitation. A conflict-of-interest statement is required if any conflicts exist, along with a detailed plan for mitigating the conflict(s). The City reserves the sole discretion to determine whether a conflict disqualifies a firm and/or whether a conflict mitigation plan is acceptable.

If a conflict of interest exists, the Respondent must:

- Complete Form CIQ
- File the form with the City Secretary
- Include a copy of the completed Form CIQ with the proposal

If no conflict of interest exists, Form CIQ is not required. Regardless of whether a conflict exists, this Form 2 must be completed and signed.

Respondent Acknowledgment

By signing below, the Respondent certifies and acknowledges the following:

1. The Respondent has reviewed the requirements of Chapter 176, Texas Local Government Code, regarding conflict-of-interest disclosures.
2. The Respondent understands that a completed Texas Ethics Commission Form CIQ must be filed with the City Secretary's Office of the City of Brownsville, Texas, within seven (7) business days after the Respondent becomes aware of a conflict.
3. The Respondent acknowledges that the completed Form CIQ is a public record and will be made available by the City Secretary in accordance with state law.
4. The Respondent understands that failure to file a required Form CIQ is a violation of state law and may result in penalties under Texas Local Government Code §176.006 and possible disqualification from consideration for award.
5. The Respondent shall submit this acknowledgment form as part of its solicitation response and attach a copy of the completed TEC Form CIQ, if applicable.

City Secretary Contact Information

City of Brownsville – Office of the City Secretary
1001 East Elizabeth Street, Brownsville, Texas 78520
Email: citysecretary@brownsvilletx.gov
Phone: (956) 548-6000

Certification

By signing below, the Respondent certifies that they have reviewed and understand the requirements of Chapter 176, Texas Local Government Code and have determined whether a conflict of interest exists. The Respondent further certifies that, if a conflict of interest exists, a completed Conflict of Interest Questionnaire (Form CIQ) has been or will be filed with the City Secretary in accordance with state law and that a copy of the completed Form CIQ is included with this submission, if applicable. The Respondent affirms that all information provided is true and correct and that they are authorized to bind the entity.

Signature: _____

Printed Name: Jorge A. Flores, P.G.

Title: Senior Principal/Operations Manager

Date: 7-8-2026

Company Name: Terracon Consultants, Inc.

Phone: 956-283-8254

Email: jorge.flores@terracon.com

CONFLICT OF INTEREST QUESTIONNAIRE

FORM CIQ

For vendor doing business with local governmental entity

This questionnaire reflects changes made to the law by H.B. 23, 84th Leg., Regular Session.

This questionnaire is being filed in accordance with Chapter 176, Local Government Code, by a vendor who has a business relationship as defined by Section 176.001(1-a) with a local governmental entity and the vendor meets requirements under Section 176.006(a).

By law this questionnaire must be filed with the records administrator of the local governmental entity not later than the 7th business day after the date the vendor becomes aware of facts that require the statement to be filed. *See* Section 176.006(a-1), Local Government Code.

A vendor commits an offense if the vendor knowingly violates Section 176.006, Local Government Code. An offense under this section is a misdemeanor.

OFFICE USE ONLY
Date Received

1 **Name of vendor who has a business relationship with local governmental entity.**

Terracon Consultants, Inc.

2 ☐ **Check this box if you are filing an update to a previously filed questionnaire.** (The law requires that you file an updated completed questionnaire with the appropriate filing authority not later than the 7th business day after the date on which you became aware that the originally filed questionnaire was incomplete or inaccurate.)

3 **Name of local government officer about whom the information is being disclosed.**

N/A

Name of Officer

4 **Describe each employment or other business relationship with the local government officer, or a family member of the officer, as described by Section 176.003(a)(2)(A). Also describe any family relationship with the local government officer. Complete subparts A and B for each employment or business relationship described. Attach additional pages to this Form CIQ as necessary.**

N/A

A. Is the local government officer or a family member of the officer receiving or likely to receive taxable income, other than investment income, from the vendor?

☐ Yes ☐ No

B. Is the vendor receiving or likely to receive taxable income, other than investment income, from or at the direction of the local government officer or a family member of the officer AND the taxable income is not received from the local governmental entity?

☐ Yes ☐ No

5 **Describe each employment or business relationship that the vendor named in Section 1 maintains with a corporation or other business entity with respect to which the local government officer serves as an officer or director, or holds an ownership interest of one percent or more.**

N/A

6 ☐ Check this box if the vendor has given the local government officer or a family member of the officer one or more gifts as described in Section 176.003(a)(2)(B), excluding gifts described in Section 176.003(a-1).

7 Jorge A. Flores, P.G. 7-8-2026

Signature of vendor doing business with the governmental entity — Date

CONFLICT OF INTEREST QUESTIONNAIRE
For vendor doing business with local governmental entity

A complete copy of Chapter 176 of the Local Government Code may be found at http://www.statutes.legis.state.tx.us/Docs/LG/htm/LG.176.htm. For easy reference, below are some of the sections cited on this form.

Local Government Code § 176.001(1-a): "Business relationship" means a connection between two or more parties based on commercial activity of one of the parties. The term does not include a connection based on:

(A) a transaction that is subject to rate or fee regulation by a federal, state, or local governmental entity or an agency of a federal, state, or local governmental entity;

(B) a transaction conducted at a price and subject to terms available to the public; or

(C) a purchase or lease of goods or services from a person that is chartered by a state or federal agency and that is subject to regular examination by, and reporting to, that agency.

Local Government Code § 176.003(a)(2)(A) and (B):

(a) A local government officer shall file a conflicts disclosure statement with respect to a vendor if:

***

(2) the vendor:

(A) has an employment or other business relationship with the local government officer or a family member of the officer that results in the officer or family member receiving taxable income, other than investment income, that exceeds $2,500 during the 12-month period preceding the date that the officer becomes aware that

(i) a contract between the local governmental entity and vendor has been executed; or

(ii) the local governmental entity is considering entering into a contract with the vendor;

(B) has given to the local government officer or a family member of the officer one or more gifts that have an aggregate value of more than $100 in the 12-month period preceding the date the officer becomes aware that:

(i) a contract between the local governmental entity and vendor has been executed; or

(ii) the local governmental entity is considering entering into a contract with the vendor.

Local Government Code § 176.006(a) and (a-1)

(a) A vendor shall file a completed conflict of interest questionnaire if the vendor has a business relationship with a local governmental entity and:

(1) has an employment or other business relationship with a local government officer of that local governmental entity, or a family member of the officer, described by Section 176.003(a)(2)(A);

(2) has given a local government officer of that local governmental entity, or a family member of the officer, one or more gifts with the aggregate value specified by Section 176.003(a)(2)(B), excluding any gift described by Section 176.003(a-1); or

(3) has a family relationship with a local government officer of that local governmental entity.

(a-1) The completed conflict of interest questionnaire must be filed with the appropriate records administrator not later than the seventh business day after the later of:

(1) the date that the vendor:

(A) begins discussions or negotiations to enter into a contract with the local governmental entity; or

(B) submits to the local governmental entity an application, response to a request for proposals or bids, correspondence, or another writing related to a potential contract with the local governmental entity; or

(2) the date the vendor becomes aware:

(A) of an employment or other business relationship with a local government officer, or a family member of the officer, described by Subsection (a);

(B) that the vendor has given one or more gifts described by Subsection (a); or

(C) of a family relationship with a local government officer.

Form 3 – Texas Ethics Commission Certificate of Interested Parties (Form 1295)

Purpose

This form serves as an acknowledgment of the statutory requirement for certain vendors to file a Certificate of Interested Parties (Form 1295) with the Texas Ethics Commission (TEC) before a contract can be executed with the City of Brownsville.

The requirement applies to any contract that:

- Must be approved by the City Commission or executed by a City official before becoming effective, or
- Otherwise meets the criteria established by the Texas Ethics Commission under Texas Government Code §2252.908 and 1 Texas Administrative Code Chapter 46.

Respondent Acknowledgment

By signing below, the Respondent certifies and acknowledges the following:

1. The Respondent has reviewed the requirements of Texas Government Code §2252.908 and 1 TAC Chapter 46.
2. When applicable, the Respondent shall complete and file Form 1295 electronically at https://www.ethics.state.tx.us/filinginfo/1295/ to obtain a Certificate Number issued by the TEC.
3. The Respondent shall print and provide a PDF copy to the City of Brownsville Procurement Department **after** notice of intent to award but prior to contract execution.
4. The Respondent understands that the City may not execute a contract until a completed and verified Form 1295 is received.
5. The Respondent acknowledges that the Certificate of Interested Parties will be made publicly accessible on the TEC's website in accordance with state law.

Certification

By signing below, the undersigned Respondent certifies that they have read and understood the requirements of Texas Government Code §2252.908 and 1 TAC Chapter 46 and that a completed Form 1295 will be filed and provided to the City prior to contract execution, if applicable.

The Respondent further understands that the Form 1295 itself must be signed in accordance with TEC requirements.

Signature: [signature]

Printed Name: Jorge A. Flores, P.G.

Title: Senior Principal/Operations Manager

Date: 7-6-2026

Company Name: Terracon Consultants, Inc.

Phone: 956-283-8254

Email: jorge.flores@terracon.com

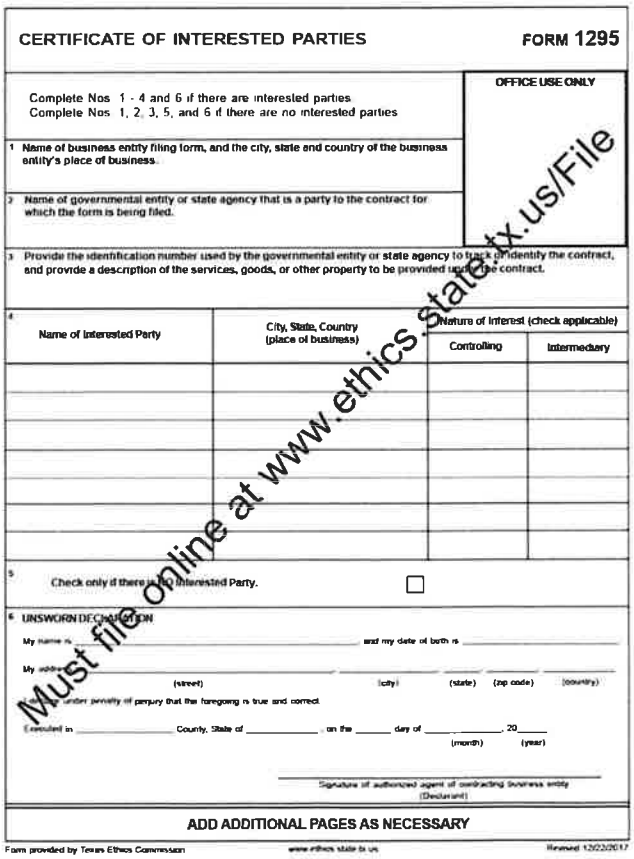

CERTIFICATE OF INTERESTED PARTIES **FORM 1295**

Complete Nos 1 - 4 and 6 if there are interested parties
Complete Nos 1, 2, 3, 5, and 6 if there are no interested parties

OFFICE USE ONLY

1 Name of business entity filing form, and the city, state and country of the business entity's place of business.

2 Name of governmental entity or state agency that is a party to the contract for which the form is being filed.

3 Provide the identification number used by the governmental entity or state agency to track or identify the contract, and provide a description of the services, goods, or other property to be provided under the contract.

4

Name of Interested Party	City, State, Country (place of business)	Nature of Interest (check applicable)	
		Controlling	Intermediary

5 Check only if there is NO Interested Party. ☐

6 UNSWORN DECLARATION

My name is _____ and my date of birth is _____

My address _____ (street) _____ (city) _____ (state) _____ (zip code) _____ (country)

I declare under penalty of perjury that the foregoing is true and correct.

Executed in _____ County, State of _____, on the _____ day of _____ (month), 20____ (year)

_____
Signature of authorized agent of contracting business entity
(Declarant)

ADD ADDITIONAL PAGES AS NECESSARY

Form provided by Texas Ethics Commission www.ethics.state.tx.us Revised 12/22/2017

Must file online at www.ethics.state.tx.us/File

CERTIFICATE OF INTERESTED PARTIES

FORM 1295

Complete Nos. 1 - 4 and 6 if there are interested parties.
Complete Nos. 1, 2, 3, 5, and 6 if there are no interested parties.

OFFICE USE ONLY
CERTIFICATION OF FILING

Certificate Number:
2026-1485723

Date Filed:
07/06/2026

Date Acknowledged:

1 Name of business entity filing form, and the city, state and country of the business entity's place of business.
Terracon Consultants, Inc.
Pharr, TX United States

2 Name of governmental entity or state agency that is a party to the contract for which the form is being filed.
City of Brownsville

3 Provide the identification number used by the governmental entity or state agency to track or identify the contract, and provide a description of the services, goods, or other property to be provided under the contract.
309-26-EPMO-CMA
Materials Testing and Inspection Services for the City of Brownsville Public Safety Complex

4 Name of Interested Party	City, State, Country (place of business)	Nature of interest (check applicable)	
		Controlling	Intermediary
Anderson, Tim	Phoenix, AZ United States	X	
Sander, Jason	Cincinatti, OH United States	X	
Kephart, Jason	Olathe, KS United States	X	
Packer, Gayle	Olathe, KS United States	X	
Roberts, Jeffrey	Houston, TX United States	X	
Anderson, William	Savannah, GA United States	X	

5 Check only if there is NO Interested Party. ☐

6 UNSWORN DECLARATION

My name is Jorge A. Flores, P.G., and my date of birth is 10/23/1975.

My address is 1506 Mid Cities Dr., Pharr (city), TX (state), 78577 (zip code), USA (country).

I declare under penalty of perjury that the foregoing is true and correct.

Executed in Hidalgo County, State of Texas, on the 7th day of July (month), 2026 (year).

Signature of authorized agent of contracting business entity
(Declarant)

CERTIFICATE OF INTERESTED PARTIES

FORM 1295

Complete Nos. 1 - 4 and 6 if there are interested parties.
Complete Nos. 1, 2, 3, 5, and 6 if there are no interested parties.

OFFICE USE ONLY
CERTIFICATION OF FILING

Certificate Number:
2026-1485723

Date Filed:
07/06/2026

Date Acknowledged:
07/08/2026

1 Name of business entity filing form, and the city, state and country of the business entity's place of business.
Terracon Consultants, Inc.
Pharr, TX United States

2 Name of governmental entity or state agency that is a party to the contract for which the form is being filed.
City of Brownsville

3 Provide the identification number used by the governmental entity or state agency to track or identify the contract, and provide a description of the services, goods, or other property to be provided under the contract.
309-26-EPMO-CMA
Materials Testing and Inspection Services for the City of Brownsville Public Safety Complex

4 Name of Interested Party	City, State, Country (place of business)	Nature of interest (check applicable)	
		Controlling	Intermediary
Anderson, Tim	Phoenix, AZ United States	X	
Sander, Jason	Cincinatti, OH United States	X	
Kephart, Jason	Olathe, KS United States	X	
Packer, Gayle	Olathe, KS United States	X	
Roberts, Jeffrey	Houston, TX United States	X	
Anderson, William	Savannah, GA United States	X	

5 Check only if there is NO Interested Party. ☐

6 UNSWORN DECLARATION

My name is _____, and my date of birth is _____.

My address is _____, _____, _____, _____, _____.
(city) (state) (zip code) (country)

I declare under penalty of perjury that the foregoing is true and correct.

Executed in _____County, State of _____, on the _____day of _____, 20_____.
(month) (year)

_____
Signature of authorized agent of contracting business entity
(Declarant)

Contract Summary Form
Contract Number 309-26-EPMO-CMA

Procurement Info	
Procurement Method:	**Vendor Under a Master Agreement – GTS-67-0622**
New Contract:	**Yes ☒ No ☐**
Contractor	
Vendor Name:	**Terracon Consultants, Inc**
Address:	1506 Mid Cities Drive, Pharr, TX 78577
Point of Contact / Project Manager*:	Jorge Perez
Email Address:	
City Contact Information	
Department:	**Enterprise Project Management Office**
Point of Contact / Project Manager:	Yolanda Y. De la Torre
Email Address:	Yolanda.DeLaTorre@brownsvilletx.gov
Contract Term	
Contract Amount:	Not-to-Exceed Amount: **$126,425.00**
Contract Base/Primary Term:	Upon execution through completion of the Public Safety Complex – Phase 1 project.
Renewal Periods (if any):	N/A
Total Term of Contract:	Upon execution through completion of the Public Safety Complex – Phase 1 project.
Important	
Compensation	Compensation shall be based on the actual quantities of services performed at the unit rates established in the Contractor's proposal, up to the not-to-exceed contract amount of **$126,425.00**. Invoices shall be submitted monthly for services authorized and performed.
Budget Information	
State or Federal Funds:	**Yes ☐ No ☒**
GL Account:	

CITY OF BROWNSVILLE CONTRACT AGREEMENT FOR PUBLIC SAFETY COMPLEX PHASE 1 MATERIALS TESTING & INSPECTION SERVICES 309-26-EPMO-CMA

This Agreement shall commence upon the approval of the City Manager and executed by the City of Brownsville's Manager or designee. This agreement is between The City of Brownsville, Texas, hereinafter referred to as ("CITY") and Terracon Consultants, Inc. hereinafter referred to as ("CONTRACTOR"), collectively referred to as "Parties" and individually as "Party".

1. **Documents**
   a. The following documents (collectively, "Contract Documents") are hereby incorporated into and made part of this Agreement.

      i. Scope of Services, Conditions and Additional Services (Exhibit A)
      ii. Term of Agreement (Exhibit B)
      iii. Master Agreement GTS-67-0622 (Exhibit C)
      iv. Form 2 - Statement of Conflict of Interest (Exhibit D)
      v. Insurance (Exhibit E)

2. **Scope of Services**
   a. Contractor shall perform the Services under this agreement upon written request orders by CITY. Unless otherwise specified in a project request, Contractor and CITY agree that the scope of work is deemed to include preliminary considerations and prerequisites, and all tasks which are an integral and inseparable part of the work described in the Contract Documents or by separate written request.
   b. Contractor will perform such Services in a diligent and workmanlike manner consistent with industry standards.
   c. By signing this Agreement, Contractor represents that it has thoroughly reviewed the Contract Documents incorporated into this Agreement, including but not limited to "Exhibit A" Scope of services and that it accepts the description of the Work and the conditions under which the Work is to be performed and completed.

3. **Independent Contractor; Personnel**
   a. Contractor enters into this Agreement as, and shall continue to be, an independent Contractor. All Services shall be performed only by Contractor and Contractor's employees. Under no circumstances shall Contractor, or any of Contractor's employees, look to CITY as his/her employer, or as a partner, agent or principal. Neither Contractor, nor any of Contractor's employees, shall be entitled to any benefits accorded to CITY's employees, including without limitation worker's compensation, disability insurance, vacation or sick pay. Contractor shall be responsible for providing, at Contractor's expense, and in Contractor's name, unemployment, disability, worker's compensation and other insurance, as well as any and all licenses and permits usual or necessary for conducting the Services. Contractor shall be responsible for paying all applicable local, state and federal taxes.
   b. Contractor represents and warrants to CITY that its employees performing Work hereunder will have sufficient expertise, training, licensure (if applicable) and experience to accomplish the Services.

4. **Term of Agreement.**
   a. The initial contract period shall commence upon approval by the City Manager and when executed by the City of Brownsville's Manager or designee and shall end or be extended upon the terms specified in

Contract Documents "Exhibit B". The term or any continuation of this Agreement shall be subject to both the appropriation and the availability of funds by CITY.

5. Compensation

a. Contractor agrees that compensation for services shall be as specified in the Contract Documents "Exhibit A". It is acknowledged and agreed by Contractor that compensation, as enumerated in Exhibit C constitutes a limitation upon CITY's obligation to compensate Contractor for Contractor's services pursuant and related to this Agreement but it does not constitute a limitation of any sort upon Contractor's obligation to perform all items of work required by or which can be reasonably inferred from the Scope of Services.

b. Contractor may submit invoices for compensation no more often than monthly, but only after the services for which the invoices are submitted have been completed. An original invoice plus one copy are due within fifteen (15) days of the end of the month except the final invoice which must be received no later than sixty (60) days after this Agreement expires. Invoices shall designate the nature of the services performed and/or the goods provided. Notwithstanding any provision of this Agreement to the contrary, CITY may withhold, in whole or in part, payment to the extent necessary to protect itself from loss on account of inadequate or defective work that has not been remedied or resolved in a manner satisfactory to the CITY's Contract Administrator or failure to comply with this Agreement. The amount withheld shall not be subject to payment of interest by CITY.

6. Observation and Review of the Project.

a. The Contractor shall exercise reasonable care and due diligence in discovering and promptly reporting to the City defects or deficiencies in the work of the Contractor or any subContractors or sub-Contractors reasonably observed during regular site visits.

7. Ownership of Documents.

a. All documents prepared or furnished by the Contractor (and Contractor's subContractors or sub-Contractors) pursuant to this Agreement are instruments of service and shall become property of the City upon the termination of this Agreement. The Contractor is entitled to retain copies of all such documents.

8. Insurance

a. The Contractor shall furnish proof of insurance requirements as specified in Contract Documents "Exhibit E". The coverage is to remain in force at all times during the contract period and the minimum insurance coverage is required. The commercial general liability insurance policy shall name the City of Brownsville, Texas, as an "additional insured." This MUST be written in the description section of the insurance certificate, even if there is a check-off box on the insurance certificate. Any costs for adding the City as "additional insured" shall be at the Contractor's expense.

b. The CITY shall be given notice 10 days prior to cancellation or modification of any required insurance. The insurance provided shall be endorsed or amended to comply with this notice requirement. In the event that the insurer is unable to accommodate, it shall be the responsibility of the Contractor to provide the proper notice. Such notification will be in writing by registered mail, return receipt requested and addressed to the Procurement Services Division.

c. The Contractor's insurance must be provided by an A.M. Best's "A-"rated or better insurance company authorized to issue insurance policies in the State of Texas, subject to approval by the City of Brownsville Department of Safety and Risk Management. Any exclusions or provisions in the insurance maintained

by the Contractor that excludes coverage for work contemplated in this solicitation shall be deemed unacceptable, and shall be considered breach of contract.

9. Termination

a. *Termination for Cause.* The aggrieved party may terminate this Agreement for cause if the party in breach has not corrected the breach within ten (10) days after written notice from the aggrieved party identifying the breach. CITY may also terminate this Agreement upon such notice as the City of Brownsville's City Manager deems appropriate under the circumstances in the event the City Manager determines that termination is necessary to protect the public health or safety. The parties agree that if the CITY erroneously, improperly or unjustifiably terminates for cause, such termination shall be deemed a termination for convenience, which shall be effective thirty (30) days after such notice of termination for cause is provided.

This Agreement may be terminated for cause for reasons including, but not limited to, Contractor's repeated (whether negligent or intentional) submission for payment of false or incorrect bills or invoices, failure to perform the Work to CITY's satisfaction; or failure to continuously perform the work in a manner calculated to meet or accomplish the objectives as set forth in this Agreement.

b. *Termination for Convenience.* CITY reserves the right, in its best interest as determined by the City of Brownsville's City Manager, to cancel this contract for convenience by giving written notice to the Contractor at least thirty (30) days prior to the effective date of such cancellation. In the event this Agreement is terminated for convenience, Contractor shall be paid for any services performed to CITY's satisfaction pursuant to the Agreement through the termination date specified in the written notice of termination. Contractor acknowledges and agrees that he/she/it has received good, valuable and sufficient consideration from CITY, the receipt and adequacy of which are hereby acknowledged by Contractor, for CITY's right to terminate this Agreement for convenience.

c. *Cancellation for Non-appropriated Funds.* CITY reserves the right, in its best interest as determined by the City of Brownsville's City Manager, to cancel this contract for non-appropriated funds or unavailability of funds by giving written notice to the Contractor at least thirty (30) days prior to the effective date of such cancellation. The obligation of CITY for payment to a Contractor is limited to the availability of funds appropriated in a current fiscal period, and continuation of the contract into a subsequent fiscal period is subject to appropriation of funds, unless otherwise provided by law.

d. *Force Majeure.* CITY and Contractor will be excused from the performance of their respective obligations under this agreement when and to the extent that their performance is delayed or prevented by any circumstances beyond their control including, fire, flood, explosion, strikes or other labor disputes, act of God or public emergency, war, riot, civil commotion, malicious damage, act or omission of any governmental authority, delay or failure or shortage of any type of transportation, equipment, or service from a public utility needed for their performance, provided that:

   i. The non performing party gives the other party prompt written notice describing the particulars of the Force Majeure including, but not limited to, the nature of the occurrence and its expected duration, and continues to furnish timely reports with respect thereto during the period of the Force Majeure;
   ii. The excuse of performance is of no greater scope and of no longer duration than is reasonably necessary when considered in light of the Force Majeure;
   iii. No obligations of either party that arose before the Force Majeure causing the excuse of performance are excused as a result of the Force Majeure; and
   iv. The non-performing party uses its best efforts to remedy its inability to perform.

v. Notwithstanding the above, performance shall not be excused under this Section for a period in excess of sixty (60) days, provided that in extenuating circumstances, CITY may excuse performance for a longer term. Economic hardship of the Contractor will not constitute Force Majeure. The term of the agreement shall be extended by a period equal to that during which either party's performance is suspended under this Section.

10. Materiality and Waiver of Breach.

a. CITY and Contractor agree that each requirement, duty, and obligation set forth herein is substantial and important to the formation of this Agreement and that each is, therefore, a material term hereof. CITY's failure to enforce any provision of this Agreement shall not be deemed a waiver of such provision or modification of this Agreement. A waiver of any breach of a provision of this Agreement shall not be deemed a waiver of any subsequent breach and shall not be construed to be a modification of the terms of this Agreement

11. Indemnification.

a. CONTRACTOR COVENANTS AND AGREES TO FULLY INDEMNIFY, DEFEND AND HOLD HARMLESS, THE CITY AND THE ELECTED OFFICIALS, EMPLOYEES, OFFICERS, DIRECTORS, VOLUNTEERS AND REPRESENTATIVES OF THE CITY, INDIVIDUALLY AND COLLECTIVELY, FROM AND AGAINST ANY AND ALL COSTS, CLAIMS, LIENS, DAMAGES, LOSSES, EXPENSES, FEES, FINES, PENALTIES, PROCEEDINGS, ACTIONS, DEMANDS, CAUSES OF ACTION, LIABILITY AND SUITS OF ANY KIND AND NATURE, INCLUDING BUT NOT LIMITED TO, PERSONAL OR BODILY INJURY, DEATH AND PROPERTY DAMAGE, MADE UPON THE CITY DIRECTLY OR INDIRECTLY ARISING OUT OF, RESULTING FROM OR RELATED TO CONTRACTOR'S ACTIVITIES UNDER THIS AGREEMENT, INCLUDING ANY ACTS OR OMISSIONS OF CONTRACTOR, ANY AGENT, OFFICER, DIRECTOR, REPRESENTATIVE, EMPLOYEE, CONTRACTOR OR SUBCONTRACTOR OF CONTRACTOR, AND THEIR RESPECTIVE OFFICERS, AGENTS EMPLOYEES, DIRECTORS AND REPRESENTATIVES WHILE IN THE EXERCISE OF THE RIGHTS OR PERFORMANCE OF THE DUTIES UNDER THIS AGREEMENT. THIS INDEMNIFICATION PROVISION IS SPECIFICALLY INTENDED TO OPERATE AND BE EFFECTIVE EVEN IF IT IS ALLEGED OR PROVEN THAT ALL OR SOME OF THE DAMAGES BEING SOUGHT WERE CAUSED, IN WHOLE OR IN PART, BY ANY ACT, OMISSION OR NEGLIGENCE OF THE CITY. THIS INDEMNITY PROVISION IS INTENDED TO INCLUDE, WITHOUT LIMITATION, INDEMNITY FOR COSTS, EXPENSES AND LEGAL FEES INCURRED BY THE CITY IN DEFENDING AGAINST SUCH CLAIMS AND CAUSES OF ACTIONS. IN THE EVENT CONTRACTOR AND CITY ARE FOUND JOINTLY LIABLE BY A COURT OF COMPETENT JURISDICTION, LIABILITY SHALL BE APPORTIONED COMPARATIVELY IN ACCORDANCE WITH THE LAWS FOR THE STATE OF TEXAS, WITHOUT, HOWEVER, WAIVING ANY

GOVERNMENTAL IMMUNITY AVAILABLE TO THE CITY UNDER TEXAS LAW AND WITHOUT WAIVING ANY DEFENSES OF THE PARTIES UNDER TEXAS LAW.

b. THE PROVISIONS OF THIS INDEMNITY ARE SOLELY FOR THE BENEFIT OF THE PARTIES HERETO AND NOT INTENDED TO CREATE OR GRANT ANY RIGHTS, CONTRACTUAL OR OTHERWISE, TO ANY OTHER PERSON OR ENTITY. CONTRACTOR SHALL ADVISE THE CITY IN WRITING WITHIN 24 HOURS OF ANY CLAIM OR DEMAND AGAINST THE CITY OR CONTRACTOR KNOWN TO CONTRACTOR RELATED TO OR ARISING OUT OF CONTRACTOR'S ACTIVITIES UNDER THIS AGREEMENT, AND SHALL SEE TO THE INVESTIGATION AND DEFENSE OF SUCH CLAIM OR DEMAND AT CONTRACTOR'S COST. THE CITY SHALL HAVE THE RIGHT, AT ITS OPTION AND AT ITS OWN EXPENSE, TO PARTICIPATE IN SUCH DEFENSE WITHOUT RELIEVING CONTRACTOR OF ANY OF ITS OBLIGATIONS UNDER THIS PARAGRAPH.

c. This Indemnification provision shall survive termination or expiration of the Agreement.

12. Miscellaneous Provisions.

a. *Successors and Assigns.* All of the provisions of this Agreement shall be binding upon and inure to the benefit of the parties hereto and their respective heirs, if any, successors, and assigns.

b. *Choice of Law.* The laws of the state of Texas shall govern the validity of this Agreement, the construction of its terms and the interpretation of the rights and duties of the parties hereto.

c. *No Waiver of Governmental Immunity.* NOTHING IN THIS AGREEMENT SHALL BE CONSTRUED TO WAIVE CITY'S GOVERNMENTAL IMMUNITY FROM LAWSUIT, WHICH IMMUNITY IS EXPRESSLY RETAINED TO THE EXTENT IT IS NOT CLEARLY AND UNAMBIGUOUSLY WAIVED BY STATE LAW.

d. *Assignment.* Contractor shall not assign any of Contractor's rights under this Agreement or delegate the performance of any of Contractor's duties hereunder, without the prior consent of CITY.

e. *Modification or Amendment.* No amendment, change or modification of this Agreement shall be valid unless in writing signed by the parties hereto.

f. *Venue.* This Agreement and any and all matters arising directly or indirectly here from shall be governed by and construed and enforced in accordance with the Laws of the State of Texas, in the Federal and State Courts of Cameron County, Texas having jurisdiction. (b) If at any time there is a dispute between or among the Parties with respect to any matter arising directly or indirectly from this Agreement (an "Agreement Matter"), the Parties agree that, prior to seeking judicial remedy, they will engage in face-to-face negotiations in an attempt to resolve such dispute and shall, upon failing to negotiate a mutually-satisfactory resolution, choose a mutually agreeable neutral third party to mediate such dispute. Mediation shall be non-binding and shall be confidential.

g. *Notices.* Any and all notices, demands, or other communications required or desired to be given hereunder by any party shall be in writing and shall be validly given or made to another party if personally served, or if deposited in the United States mail, certified or registered, postage prepaid, return receipt requested. If such notice or demand is served personally, notice shall be deemed constructively made at the time of such personal service. If such notice, demand or other communication is given by mail, such notice shall be conclusively deemed given five days after deposit thereof in the United States

mail addressed to the party to whom such notice, demand or other communication is to be given as follows:

If to Contractor:	Terracon Consultants, Inc. 1506 Mid Cities Drive, Pharr, TX 78577
If to CITY:	City of Brownsville 1001 E. Elizabeth St. Brownsville, Texas, 78521

Any party hereto may change its address for purposes of this paragraph by written notice given in the manner provided above.

h. *Entire Understanding.* This document and any exhibit attached constitute the entire understanding and agreement of the parties, and any and all prior agreements, understandings, and representations are hereby terminated and canceled in their entirety and are of no further force and effect.

i. *Unenforceability of Provisions.* If any provision of this Agreement, or any portion thereof, is held to be invalid and unenforceable, then the remainder of this Agreement shall nevertheless remain in full force and effect.

IN WITNESS WHEREOF the undersigned have executed this Agreement as of the day and year first written above.

CITY OF BROWNSVILLE	CONTRACTOR
Signature: _____	Signature: Jorge A. Flores
Print Name: _____	Print Name: Jorge A. Flores, P.G.
Title: _____	Title: Senior Principal/Operations Manager
Date: _____	Date: 7-7-2026

APPROVED as to form and legality
By Criselda Ivon Rincon Flores at 4:30 pm, Jul 14, 2026

1506 Mid Cities Drive
Pharr, Texas 78577
P (956) 283-8254
Terracon.com

July 1, 2026

City of Brownsville
1001 E. Elizabeth St., Brownsville, TX 78520
Brownsville, Texas 78520

Attn: Mr. Alan Guard, City Manager
P: (956) 561-3901
E: alan.guard@brownsvilletx.gov

RE: Proposal for Materials Testing Services
City of Brownsville Public Safety Complex – Phase 1
Brownsville, Texas
Terracon Proposal No. 1000016903

Dear Mr. Guard:

Terracon Consultants, Inc. (Terracon) is pleased to present this proposal for materials testing and inspection services for the above-referenced project. The purpose of our services will be to periodically observe construction activities and test construction materials to evaluate general conformance with project documents. **We understand that we have been chosen to provide these services for this publicly funded project. Therefore, by providing cost information we are not in violation of the Texas Professional Services Procurement Act.**

A. PROJECT INFORMATION

The project consists of all earthwork and underground utilities for the freestanding Public Safety Building. The proposed utilities include the installation of sanitary sewer lines, storm sewer lines, water lines, and fire protection lines. The project site is located in Brownsville, Texas.

Project documents available for review at the time of this proposal include:

- Project plans titled "Public Safety Building – Bid Package 1" dated April 17, 2026.

If selected for this project, Terracon requests that we be placed on the distribution of all documents.

B. WHY TERRACON?

Construction Materials Testing & Special Inspection Services

Our team of inspectors, technicians, and engineers is experienced with providing materials testing, special inspections, and/or observations of concrete, soils, aggregate, masonry, structural steel, foundations, fireproofing, and asphalt pavement in the local area and are familiar with the recognized building jurisdiction requirements.

Compass is Terracon's latest client interfacing tool and elevates the way we do business. Within Terracon Compass, you can access your projects and their associated data, including environmental and geotechnical projects. When you open a materials project within Compass, you will see your materials tests and observations placed on a map. This geographic reference allows you to find your information by the "where", rather than the "when." Other features of Compass include:

- Filters for Date Performed, Service Type and Test Result Status
- Deviation for Non-Conformance Summary: Image overlays to reference multiple plan pages to your test results
- Map layer options: Test results are inserted into Compass as soon as the report has been reviewed and distributed. It becomes easier than ever to view and close deviations with an option to display within a map while also showing them in a table format.

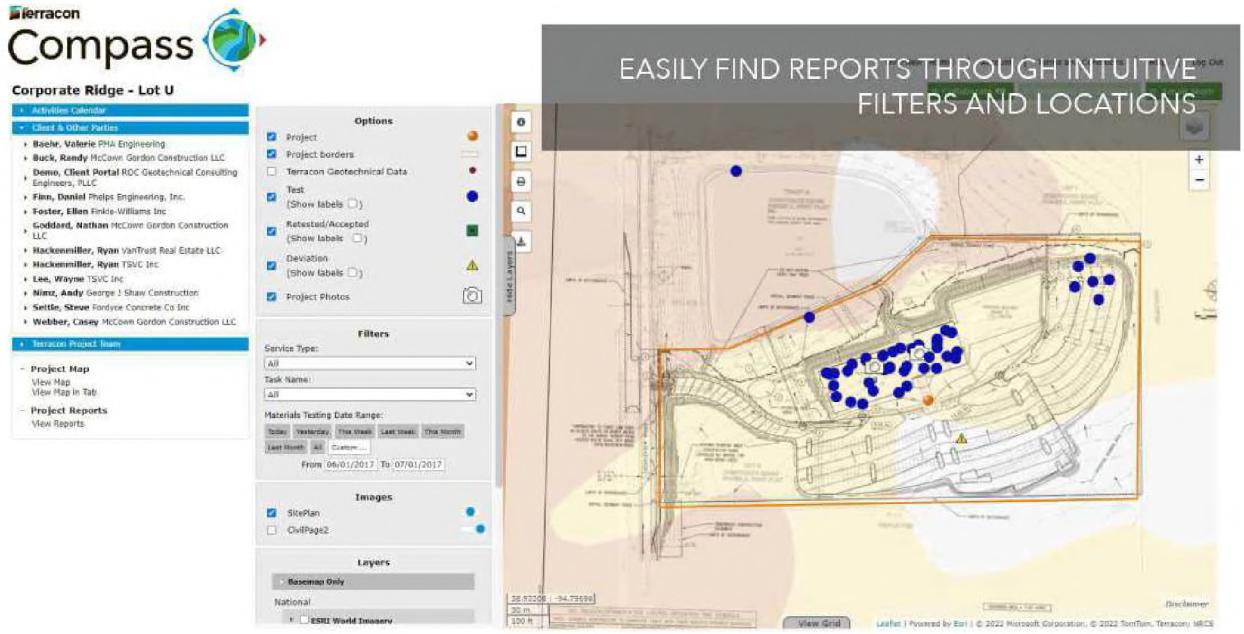

Laboratory Capabilities

Our Pharr laboratory are accredited by AASHTO Resource which is recognized by ASTM E329 Standard Specification for Agencies Engaged in Construction Inspection Testing, or Special Inspection. The scope of accreditation includes the field of Soils, Aggregates, and Portland Cement Concrete. As a requirement of accreditation, we regularly participate in the Proficiency Sample Programs of both AASHTO Resource and the Cement and Concrete Reference Laboratory (CCRL). Our office includes a fully equipped laboratory and employs engineering technicians and special inspectors certified by many agencies including the American Concrete Institute (ACI) and by Texas Department of Transportation (TxDOT). We provide a rigorous internal training program where our staff are evaluated in specific field and laboratory test procedures by internal Terracon auditors and external agencies.

- Accredited by AASHTO Materials Reference Laboratory (AMRL)
- Accredited by Concrete and Cement Reference Laboratory (CCRL)

C. SCOPE OF SERVICES

Terracon proposes to provide the following scope of services. The proposed scope is based on our review of the plans and specifications and on our expectation of the services that will be requested.

A. Earthwork Observations and Testing:

- Sample materials proposed for use as backfill. Prepare and test the samples for Atterberg Limits (ASTM D4318), Sieve Analysis with Percent Passing No. 200 Sieve (ASTM D422 & D1140), Sieve Analysis (ASTM C136), USCS Soil Classification (ASTM D2487) and Moisture Density Relation – Standard Proctor (ASTM D698 and/or D1557).
- On a call-out (periodic) basis, perform field compaction / moisture tests using the nuclear method (ASTM D6938) to determine the compaction level and moisture content of the soil.
- On a call-out (periodic) basis, perform proof rolling observation on subgrade soil prior to soil fill.

B. Project Management and Administration:

- A project manager will be assigned to the project to review the daily activity and assist in scheduling the work. Field and laboratory tests will be reviewed prior to submittal. The project manager will be responsible for monitoring the project budget and will oversee the preparation of the final report.

D. COMPENSATION

Our scope of services will be determined by your authorization for specific services as requested by your project superintendent or other representative. Charges for our services will be based on the quantities of services provided and the unit rates shown on the attached TABLE 1.

Additional services that may be requested (but are not included in this agreement) can be provided at the unit fees of the current "Schedule of Services and Fees". The actual cost of our services will be determined by the construction schedule and the quantity of services provided. Based on our review of the construction plans and specifications and our experience with similar construction projects, our fee estimates to provide the proposed scope of services is **$126,425.00**.

There is a minimum charge of four (4) hours per trip for all field services. Overtime rates (1.5 times regular rates) apply to time in excess of 8 hours per day (Monday to Friday), hours before 8:00AM or after 5:00PM (Monday to Friday) and all hours on Saturdays. The overtime factor is 2.0 for work on Sundays and holidays.

Invoices will be issued monthly for services provided, as authorized or requested by client or a designated representative. Terracon's fee is due within 30 days of your receipt of each invoice.

E. SITE ACCESS AND SAFETY

The client shall secure all necessary site related approvals, permits, licenses, and consents necessary to commence and complete the services and will execute any necessary site access agreement. Terracon will be responsible for supervision of safety measures for its own employees but shall not be responsible for the supervision or health and safety precautions for any third parties, including Client's contractors, subcontractors, or other parties present at the site.

Employee safety is a core value of Terracon, and we are committed to an Incident and Injury-Free (IIF) workplace. It is our personal and organizational commitment at all levels of the company to everyone going home safe to their family every day. All employees are expected to perform their job assignments with safety as a primary objective. Terracon dedicates the time, resources, and equipment necessary for an IIF environment and no employee will be required to work in unsafe conditions.

F. TESTING AND OBSERVATION

The above services will be provided under an as-requested basis. Additionally, we request a 24-hour notice to schedule our services through our schedule line **(956) 283-8254**.

Client understands that testing and observation are discrete sampling procedures, and that such procedures indicate conditions only at the depths, locations, and times the procedures were performed. Terracon will provide test results and opinions based on tests and field observation only for the work tested. Client understands that testing and observation are not continuous or exhaustive and are conducted to reduce – not eliminate – project risk. Client agrees to the level or amount of testing performed and the associated risk. Client is responsible (even if delegated to contractor) for notifying and scheduling Terracon so Terracon can perform these services.

Terracon shall not be responsible for the quality and completeness of Client's contractor's work or their adherence to the project documents, and Terracon's performance of testing and observation services shall not relieve contractor in any way from its responsibility for defects discovered in its work or create a warranty or guarantee. Terracon will not supervise or direct the work performed by contractor or its subcontractors and is not responsible for their means and methods.

G. AUTHORIZATION

This proposal may be accepted by executing the attached Agreement for Services and returning the executed agreement, along with this proposal, to Terracon. This proposal for services and accompanying limitations shall constitute the terms and conditions for our services to be performed for the project.

We appreciate the opportunity to propose on this project. Please call us at (956) 283-8254 if you have any questions concerning this proposal.

Sincerely,
TERRACON CONSULTANTS, INC.
Firm Registration: TX F-3272

Jorge Perez

Jorge Perez
Group Manager

Lupe Leal

Guadalupe Leal
Department Manager

Attachments: Table 1 – Estimated Fee Summary
Agreement for Services
Distribution List

TABLE 1
ESTIMATED FEE SUMMARY

Our fee estimate is in accordance with the time and tests performed as shown below:

Earthwork Observation/Testing				
Item Description	**Quantity**	**Unit**	**Unit Rate**	**Estimate**
Standard Proctor (Moisture-Density Relationship)	20	Each	$250.00	$5,000.00
(Plasticity Index)	20	Each	$90.00	$1,800.00
% Passing No. 200 Sieve	20	Each	$90.00	$1,800.00
In-Place Density Tests	1490	Each	$25.00	$37,250.00
Technician	860	Hour	$60.00	$51,600.00
Trip Charge	215	Trip	$60.00	$12,900.00
Subtotal, Earthwork				**$110,350.00**
P.E.	20	Hour	$185.00	$3,700.00
E.I.T., Graduate Engineer	100	Hour	$110.00	$11,000.00
Administrative Fee	25	Hour	$55.00	$1,375.00
ESTIMATE TOTAL				**$126,425.00**

The quantity of In-Place Density Tests was determined based on an assumed testing frequency of one test per 5,000 square feet for mass grading, one test per 150 linear feet for utilities, and one test per 2,500 square feet for the building pad. Landscape and green areas were excluded from the testing scope.

Reference Number: 1000016903

AGREEMENT FOR SERVICES

This **AGREEMENT** is between City of Brownsville TX ("Client") and Terracon Consultants, Inc. ("Consultant") for Services to be provided by Consultant for Client on the City of Brownsville Public Safety Complex - Phase 1 - Brownsville, TX - PHA - 26 - Proposal project ("Project"), as described in Consultant's Proposal dated 06/11/2026 ("Proposal"), including but not limited to the Project Information section, unless the Project is otherwise described in Exhibit A to this Agreement (which section or Exhibit is incorporated into this Agreement).

1. **Scope of Services.** The scope of Consultant's services is described in the Proposal, including but not limited to the Scope of Services section ("Services"), unless Services are otherwise described in Exhibit B to this Agreement (which section or exhibit is incorporated into this Agreement). Portions of the Services may be subcontracted. When Consultant subcontracts to other individuals or companies, then consultant will collect from Client on the Subcontractors' behalf. Consultant's Services do not include the investigation or detection of, nor do recommendations in Consultant's reports address the presence or prevention of biological pollutants (e.g., mold, fungi, bacteria, viruses, or their byproducts) or occupant safety issues, such as vulnerability to natural disasters, terrorism, or violence. If Services include purchase of software, Client will execute a separate software license agreement. Consultant's findings, opinions, and recommendations are based solely upon data and information obtained by and furnished to Consultant at the time of the Services.
2. **Acceptance/ Termination.** Client agrees that execution of this Agreement is a material element of the consideration Consultant requires to execute the Services, and if Services are initiated by Consultant prior to execution of this Agreement as an accommodation for Client at Client's request, both parties shall consider that commencement of Services constitutes formal acceptance of all terms and conditions of this Agreement. Additional terms and conditions may be added or changed only by written amendment to this Agreement signed by both parties. In the event Client uses a purchase order or other form to administer this Agreement, the use of such form shall be for convenience purposes only and any additional or conflicting terms it contains are stricken. This Agreement shall not be assigned by either party without prior written consent of the other party. Either party may terminate this Agreement or the Services upon written notice to the other. In such case, Consultant shall be paid costs incurred and fees earned to the date of termination plus reasonable costs of closing the Project.
3. **Change Orders.** Client may request changes to the scope of Services by altering or adding to the Services to be performed. If Client so requests, Consultant will return to Client a statement (or supplemental proposal) of the change setting forth an adjustment to the Services and fees for the requested changes. Following Client's review, Client shall provide written acceptance. If Client does not follow these procedures, but instead directs, authorizes, or permits Consultant to perform changed or additional work, the Services are changed accordingly and Consultant will be paid for this work according to the fees stated or its current fee schedule. If project conditions change materially from those observed at the site or described to Consultant at the time of proposal, Consultant is entitled to a change order equitably adjusting its Services and fee.
4. **Compensation and Terms of Payment.** Client shall pay compensation for the Services performed at the fees stated in the Proposal, including but not limited to the Compensation section, unless fees are otherwise stated in Exhibit C to this Agreement (which section or Exhibit is incorporated into this Agreement). If not stated in either, fees will be according to Consultant's current fee schedule. Fee schedules are valid for the calendar year in which they are issued. Fees do not include sales tax. Client will pay applicable sales tax as required by law. Consultant may invoice Client at least monthly and payment is due upon receipt of invoice. Client shall notify Consultant in writing, at the address below, within 15 days of the date of the invoice if Client objects to any portion of the charges on the invoice, and shall promptly pay the undisputed portion. Client shall pay a finance fee of 1.5% per month, but not exceeding the maximum rate allowed by law, for all unpaid amounts 30 days or older. Client agrees to pay all collection-related costs that Consultant incurs, including attorney fees. Consultant may suspend Services for lack of timely payment. It is the responsibility of Client to determine whether federal, state, or local prevailing wage requirements apply and to notify Consultant if prevailing wages apply. If it is later determined that prevailing wages apply, and Consultant was not previously notified by Client, Client agrees to pay the prevailing wage from that point forward, as well as a retroactive payment adjustment to bring previously paid amounts in line with prevailing wages. Client also agrees to defend, indemnify, and hold harmless Consultant from any alleged violations made by any governmental agency regulating prevailing wage activity for failing to pay prevailing wages, including the payment of any fines or penalties.
5. **Third Party Reliance.** This Agreement and the Services provided are for Consultant and Client's sole benefit and exclusive use with no third party beneficiaries intended. Reliance upon the Services and any work product is limited to Client, and is not intended for third parties other than those who have executed Consultant's reliance agreement, subject to the prior approval of Consultant and Client.
6. **LIMITATION OF LIABILITY. CLIENT AND CONSULTANT HAVE EVALUATED THE RISKS AND REWARDS ASSOCIATED WITH THIS PROJECT, INCLUDING CONSULTANT'S FEE RELATIVE TO THE RISKS ASSUMED, AND AGREE TO ALLOCATE CERTAIN OF THE ASSOCIATED RISKS. TO THE FULLEST EXTENT PERMITTED BY LAW, THE TOTAL AGGREGATE LIABILITY OF CONSULTANT (AND ITS RELATED CORPORATIONS AND EMPLOYEES) TO CLIENT AND THIRD PARTIES GRANTED RELIANCE IS LIMITED TO THE GREATER OF $100,000 OR CONSULTANT'S FEE, FOR ANY AND ALL INJURIES, DAMAGES, CLAIMS, LOSSES, OR EXPENSES (INCLUDING ATTORNEY AND EXPERT FEES) ARISING OUT OF CONSULTANT'S SERVICES OR THIS AGREEMENT. PRIOR TO ACCEPTANCE OF THIS AGREEMENT AND UPON WRITTEN REQUEST FROM CLIENT, CONSULTANT MAY NEGOTIATE A HIGHER LIMITATION FOR ADDITIONAL CONSIDERATION IN THE FORM OF A SURCHARGE TO BE ADDED TO THE AMOUNT STATED IN THE COMPENSATION SECTION OF THE PROPOSAL. THIS LIMITATION SHALL APPLY REGARDLESS OF AVAILABLE PROFESSIONAL LIABILITY INSURANCE COVERAGE, CAUSE(S), OR THE THEORY OF LIABILITY, INCLUDING NEGLIGENCE, INDEMNITY, OR OTHER RECOVERY. THIS LIMITATION SHALL NOT APPLY TO THE EXTENT THE DAMAGE IS PAID UNDER CONSULTANT'S COMMERCIAL GENERAL LIABILITY POLICY.**
7. **Indemnity/Statute of Limitations.** Consultant shall indemnify and hold harmless Client and its respective employees from and against legal liability for claims, losses, damages, and expenses to the extent such claims, losses, damages, or expenses are legally determined to be caused by Consultant's negligent acts, errors, or omissions. Causes of action arising out of Consultant's Services or this Agreement regardless of cause(s) or the theory of liability, including negligence, indemnity or other recovery shall be deemed to have accrued and the applicable statute of limitations shall commence to run not later than the date of Consultant's substantial completion of Services on the project.
8. **Warranty.** Consultant will perform the Services in a manner consistent with that level of care and skill ordinarily exercised by members of the profession currently practicing under similar conditions in the same locale. **EXCEPT FOR THE STANDARD OF CARE PREVIOUSLY STATED, CONSULTANT MAKES NO WARRANTIES OR GUARANTEES, EXPRESS OR IMPLIED, RELATING TO CONSULTANT'S SERVICES AND CONSULTANT DISCLAIMS ANY IMPLIED WARRANTIES OR WARRANTIES IMPOSED BY LAW, INCLUDING WARRANTIES OF MERCHANTABILITY AND FITNESS FOR A PARTICULAR PURPOSE.**
9. **Insurance.** Consultant represents that it now carries, and will continue to carry: (i) workers' compensation insurance in accordance with the laws of the states having jurisdiction over Consultant's employees who are engaged in the Services, and employer's liability insurance ($1,000,000); (ii) commercial general liability insurance ($2,000,000 occ / $4,000,000 agg); (iii) automobile liability insurance ($2,000,000 B.I. and P.D. combined single limit); (iv) umbrella liability ($5,000,000 occ / agg); and (v) professional liability insurance ($1,000,000 claim / agg). Certificates of insurance will be provided upon request. Client and Consultant shall waive subrogation against the other party on all general liability and property coverage.

10. **CONSEQUENTIAL DAMAGES.** **NEITHER PARTY SHALL BE LIABLE TO THE OTHER FOR LOSS OF PROFITS OR REVENUE; LOSS OF USE OR OPPORTUNITY; LOSS OF GOOD WILL; COST OF SUBSTITUTE FACILITIES, GOODS, OR SERVICES; COST OF CAPITAL; OR FOR ANY SPECIAL, CONSEQUENTIAL, INDIRECT, PUNITIVE, OR EXEMPLARY DAMAGES.**
11. **Dispute Resolution.** Client shall not be entitled to assert a Claim against Consultant based on any theory of professional negligence unless and until Client has obtained the written opinion from a registered, independent, and reputable engineer, architect, or geologist that Consultant has violated the standard of care applicable to Consultant's performance of the Services. Client shall provide this opinion to Consultant and the parties shall endeavor to resolve the dispute within 30 days, after which Client may pursue its remedies at law. This Agreement shall be governed by and construed according to Kansas law.
12. **Subsurface Explorations.** Subsurface conditions throughout the site may vary from those depicted on logs of discrete borings, test pits, or other exploratory services. Client understands Consultant's layout of boring and test locations is approximate and that Consultant may deviate a reasonable distance from those locations. Consultant will take reasonable precautions to reduce damage to the site when performing Services; however, Client accepts that invasive services such as drilling or sampling may damage or alter the site. Site restoration is not provided unless specifically included in the Services.
13. **Testing and Observations.** Client understands that testing and observation are discrete sampling procedures, and that such procedures indicate conditions only at the depths, locations, and times the procedures were performed. Consultant will provide test results and opinions based on tests and field observations only for the work tested. Client understands that testing and observation are not continuous or exhaustive, and are conducted to reduce - not eliminate - project risk. Client shall cause all tests and inspections of the site, materials, and Services performed by Consultant to be timely and properly scheduled in order for the Services to be performed in accordance with the plans, specifications, contract documents, and Consultant's recommendations. No claims for loss or damage or injury shall be brought against Consultant by Client or any third party unless all tests and inspections have been so performed and Consultant's recommendations have been followed. Unless otherwise stated in the Proposal, Client assumes sole responsibility for determining whether the quantity and the nature of Services ordered by Client is adequate and sufficient for Client's intended purpose. Client is responsible (even if delegated to contractor) for requesting services, and notifying and scheduling Consultant so Consultant can perform these Services. Consultant is not responsible for damages caused by Services not performed due to a failure to request or schedule Consultant's Services. Consultant shall not be responsible for the quality and completeness of Client's contractor's work or their adherence to the project documents, and Consultant's performance of testing and observation services shall not relieve Client's contractor in any way from its responsibility for defects discovered in its work, or create a warranty or guarantee. Consultant will not supervise or direct the work performed by Client's contractor or its subcontractors and is not responsible for their means and methods. The extension of unit prices with quantities to establish a total estimated cost does not guarantee a maximum cost to complete the Services. The quantities, when given, are estimates based on contract documents and schedules made available at the time of the Proposal. Since schedule, performance, production, and charges are directed and/or controlled by others, any quantity extensions must be considered as estimated and not a guarantee of maximum cost.
14. **Sample Disposition, Affected Materials, and Indemnity.** Samples are consumed in testing or disposed of upon completion of the testing procedures (unless stated otherwise in the Services). Client shall furnish or cause to be furnished to Consultant all documents and information known or available to Client that relate to the identity, location, quantity, nature, or characteristic of any hazardous waste, toxic, radioactive, or contaminated materials ("Affected Materials") at or near the site, and shall immediately transmit new, updated, or revised information as it becomes available. Client agrees that Consultant is not responsible for the disposition of Affected Materials unless specifically provided in the Services, and that Client is responsible for directing such disposition. In no event shall Consultant be required to sign a hazardous waste manifest or take title to any Affected Materials. Client shall have the obligation to make all spill or release notifications to appropriate governmental agencies. The Client agrees that Consultant neither created nor contributed to the creation or existence of any Affected Materials conditions at the site and Consultant shall not be responsible for any claims, losses, or damages allegedly arising out of Consultant's performance of Services hereunder, or for any claims against Consultant as a generator, disposer, or arranger of Affected Materials under federal, state, or local law or ordinance.
15. **Ownership of Documents.** Work product, such as reports, logs, data, notes, or calculations, prepared by Consultant shall remain Consultant's property. Proprietary concepts, systems, and ideas developed during performance of the Services shall remain the sole property of Consultant. Files shall be maintained in general accordance with Consultant's document retention policies and practices.
16. **Utilities.** Unless otherwise stated in the Proposal, Client shall provide the location and/or arrange for the marking of private utilities and subterranean structures. Consultant shall take reasonable precautions to avoid damage or injury to subterranean structures or utilities. Consultant shall not be responsible for damage to subterranean structures or utilities that are not called to Consultant's attention, are not correctly marked, including by a utility locate service, or are incorrectly shown on the plans furnished to Consultant.
17. **Site Access and Safety.** Client shall secure all necessary site related approvals, permits, licenses, and consents necessary to commence and complete the Services and will execute any necessary site access agreement. Consultant will be responsible for supervision and site safety measures for its own employees, but shall not be responsible for the supervision or health and safety precautions for any third parties, including Client's contractors, subcontractors, or other parties present at the site. In addition, Consultant retains the right to stop work without penalty at any time Consultant believes it is in the best interests of Consultant's employees or subcontractors to do so in order to reduce the risk of exposure to unsafe site conditions. Client agrees it will respond quickly to all requests for information made by Consultant related to Consultant's pre-task planning and risk assessment processes.

Consultant:	**Terracon Consultants, Inc.**	Client:	**City of Brownsville TX**
By:	Date: **7/13/2026**	By:	Date:
Name/Title:	**Jorge A. Flores / Office Manager III**	Name/Title:	Mr. Alan Guard-City Manager
Address:	**1506 Mid Cities Dr** **Pharr, TX 78577**	Address:	**1001 E. Elizabeth St.** **Brownsville, TX 78520**
Phone:	**(956) 283-8254** Fax:	Phone:	**(956) 561-3901** Fax:
Email:	**Jorge.Flores@terracon.com**	Email:	**alan.guard@brownsvilletx.gov**

APPROVED as to form and legality
By Criselda Ivon Rincon Flores at 4:39 pm, Jul 14, 2026

DISTRIBUTION SHEET

Thank you for choosing Terracon Consultants, Inc. to provide these services. Please fill out below the pertinent information below so that we may expedite report distribution, project correspondence and invoice(s) to appropriate person (s). If you have any questions please do not hesitate to contact our office.

Project Name: _____

Client

Copies _____ Firm _____

Address _____

Attn: _____ P _____ F _____

Email: _____

Invoice (do not complete if same as client)

Copies _____ Firm _____

Address _____

Attn: _____ P ( ) _____ F ( ) _____

Email: _____

Report Distribution (Clients, Architects, Engineers, Contractors, etc...)

Copies _____ Firm _____

Address _____

Attn: _____ P ( ) _____ F ( ) _____

Email: _____

Copies _____ Firm _____

Address _____

Attn: _____ P ( ) _____ F ( ) _____

Email: _____

Copies _____ Firm _____

Address _____

Attn: _____ P ( ) _____ F ( ) _____

Email: _____

Copies _____ Firm _____

Address _____

Attn: _____ P ( ) _____ F ( ) _____

Email: _____

Copies _____ Firm _____

Address _____

Attn: _____ P ( ) _____ F ( ) _____

Email: _____

Copies _____ Firm _____

Address _____

Attn: _____ P ( ) _____ F ( ) _____

Email: _____

If you need more room or would like to send other pertinent information please provide on the back of this sheet. Thank you for your time and concern to this matter.

"EXHIBIT B"

Contract Term Details: The Contract, pending City Manager approval, shall be effective upon execution and continue through the completion of the Public Safety Complex – Phase 1 Materials Testing & Inspection Services under Master Agreement GTS-67-0622.

INDEPENDENT CONTRACTOR AGREEMENT
FOR A TERM CONTRACT FOR GEOTECHNICAL AND CONSTRUCTION MATERIAL TESTING SERVICE ON A PRE-APPROVED VENDOR LIST FOR STREET AND DRAINAGE IMPROVEMENT PROJECTS AND MISCELLANEOUS PROJECTS FOR THE CITY OF BROWNSVILLE
RFQ GTS-67-0622

This Agreement is entered into as of Tuesday, September 20, 2022, between THE CITY OF BROWNSVILLE ("CITY") and. Terracon Consultants, Inc. ("CONTRACTOR").

1. Documents

(a) The following documents (collectively, "Contract Documents") are hereby incorporated into and made part of this Agreement.

i. Scope of Services to be performed by Contractor and fee structure (Exhibit A)

ii. Term on Contract (Exhibit B)

iii. Required Contract Provisions (Exhibit C)

iv. Certificate of Insurance (Exhibit D)

2. Scope of Services: The Contractor shall perform the following services in a professional manner:

(a) Contractor shall perform all those services as necessary and as described in Exhibit A.

(b) Contractor will perform such services related to the Project in a diligent and workmanlike manner consistent with industry standards and in accordance with the schedule, if any, set forth in the Contract Documents.

(c) By signing this Agreement, Contractor represents that it has thoroughly reviewed the Contract Documents incorporated into this Agreement by reference and that it accepts the description of the Project and the conditions under which the Project is to be performed and completed.

3. Independent Contractor; Personnel

(a) Contractor enters into this Agreement as, and shall continue to be, an independent contractor. All Services shall be performed only by Contractor and Contractor's employees. Under no circumstances shall Contractor , or any of Contractor's employees, look to City as his/her employer, or as a partner, agent or principal. Neither Contractor , nor any of Contractor's employees, shall be entitled to any benefits accorded to City's employees, including without limitation worker's compensation, disability insurance, vacation or sick pay. Contractor shall be responsible for providing, at Contractor's expense, and in Contractor's name, unemployment, disability, worker's compensation and other insurance, as well as any and all licenses and permits usual or necessary for conducting the Services. Contractor shall be responsible for paying all applicable local, state and federal taxes.

(b) Contractor represents and warrants to City that its employees performing work hereunder will have sufficient expertise, training, licensure (if applicable) and experience to accomplish the Services.

(c) Contractor shall not subcontract any portion of the work required by this Agreement, except as provided in the Contract Documents. City may terminate this Agreement, effective immediately, if there is any assignment, or attempted assignment, transfer, or encumbrance, by Contractor of this Agreement or any right or interest herein without City's written consent. In the event Contractor engages any subcontractor in the performance of this Agreement, Contractor shall ensure that all of Contractor's subcontractors perform in accordance with the terms and conditions of this Agreement. Contractor shall be fully

responsible for all of Contractor's subcontractors' performance, and liable for any of Contractor's subcontractors' non-performance and all of Contractor's subcontractors' acts and omissions.

4. Term of Contract

Contract will commence upon City Commission approval and shall expire three years from date of approval. The City of Brownsville reserves the unilateral right to extend the life of the contract for two (2) periods of one (1) year each thereafter: if mutually acceptable to the contractor and the City of Brownsville.

5. Compensation.

(a) Contractor agrees to provide the services and/or materials as specified in the Contract Documents at the cost specified in Exhibit A. It is acknowledged and agreed by Contractor that this amount is the maximum payable and constitutes a limitation upon City's obligation to compensate Contractor for Contractor's services pursuant and related to this Agreement. This maximum amount, however, does not constitute a limitation of any sort upon Contractor's obligation to perform all items of work required by or which can be reasonably inferred from the Scope of Service.

(b) Contractor may submit invoices for compensation no more often than monthly, but only after the services for which the invoices are submitted have been completed. An original invoice plus one copy are due within fifteen (15) days of the end of the month except the final invoice which must be received no later than sixty (60) days after this Agreement expires. Invoices shall designate the nature of the services performed and/or the goods provided. Notwithstanding any provision of this Agreement to the contrary, City may withhold, in whole or in part, payment to the extent necessary to protect itself from loss on account of inadequate or defective work that has not been remedied or resolved in a manner satisfactory to the City's Contract Administrator or failure to comply with this Agreement. The amount withheld shall not be subject to payment of interest by City.

6. Insurance.

(a) The Contractor shall furnish proof of insurance requirements as indicated below. The coverage is to remain in force at all times during the contract period. The following minimum insurance coverage is required. The commercial general liability insurance policy shall name the City of Brownsville, Texas, as an "additional insured." This MUST be written in the description section of the insurance certificate, even if there is a check-off box on the insurance certificate. Any costs for adding the City as "additional insured" shall be at the Contractor's expense.

(b) The City of Brownsville shall be given notice 10 days prior to cancellation or modification of any required insurance. The insurance provided shall be endorsed or amended to comply with this notice requirement. In the event that the insurer is unable to accommodate, it shall be the responsibility of the Contractor to provide the proper notice. Such notification will be in writing by registered mail, return receipt requested and addressed to the Procurement Services Division.

(c) The Contractor's insurance must be provided by an A.M. Best's "A-"rated or better insurance company authorized to issue insurance policies in the State of Texas, subject to approval by the City of Brownsville Department of Safety and Risk Management. Any exclusions or provisions in the insurance maintained by the contractor that excludes coverage for work contemplated in this solicitation shall be deemed unacceptable and shall be considered breach of contract.

i. Workers' Compensation and Employers' Liability Insurance

Minimum Limits Consistent with Texas Worker's Compensation Act (Section 401):

1. $100,000 bodily injury each accident
2. $500,000 bodily injury by disease policy limit
3. $100,000 Bodily injury by disease each employee

Any firm performing work for or on behalf of the City of Brownsville must provide Workers' Compensation insurance.

ii. Commercial General Liability Insurance

Covering premises-operations, products-completed operations, independent contractors and contractual liability.

Limits: Combined single limit bodily injury/property damage $1,000,000.

This coverage must include, but not limited to:

1. Coverage for the liability assumed by the contractor under the indemnity provision of the contract.
2. Coverage for Premises/Operations
3. Products/Completed Operations
4. Broad Form Contractual Liability
5. Independent Contractors

iii. Professional Liability Insurance

Professional Liability Insurance in the amount not less than the projected total amount of the assigned project. This coverage will be adjusted to reflect the scope of work for each project.

iv. Automobile Liability Insurance

Covering all owned, hired and non-owned automobile equipment.

Limits:	Bodily injury	$250,000 each person, $500,000 each occurrence
	Property damage	$100,000 each occurrence

7. Termination.

(a) *Termination for Cause.* The aggrieved party may terminate this Agreement for cause if the party in breach has not corrected the breach within ten (10) days after written notice from the aggrieved party identifying the breach. The City Manager may also terminate this Agreement upon such notice as the City Manager deems appropriate under the circumstances in the event the City Manager determines that termination is necessary to protect the public health or safety. The parties agree that if the City erroneously, improperly or unjustifiably terminates for cause, such termination shall be deemed a termination for convenience, which shall be effective thirty (30) days after such notice of termination for cause is provided.

This Agreement may be terminated for cause for reasons including, but not limited to, Contractor's repeated (whether negligent or intentional) submission for payment of false or incorrect bills or invoices, failure to perform the Work to the City's satisfaction; or failure to continuously perform the work in a manner calculated to meet or accomplish the objectives as set forth in this Agreement.

(b) *Termination for Convenience.* The City reserves the right, in its best interest as determined by the City, to cancel this contract for convenience by giving written notice to the Contractor at least thirty (30) days prior to the effective date of such cancellation. In the event this Agreement is terminated for convenience, Contractor shall be paid for any services performed to the City's satisfaction pursuant to the Agreement through the termination date specified in the written notice of termination. Contractor acknowledges and agrees that he/she/it has received good, valuable and sufficient consideration from City, the receipt and adequacy of which are hereby acknowledged by Contractor , for City's right to terminate this Agreement for convenience.

(c) *Cancellation for Non-appropriated Funds.* The City reserves the right, in its best interest as determined by the City, to cancel this contract for non-appropriated funds or unavailability of funds by giving written notice to the Contractor at least thirty (30) days prior to the effective date of such cancellation. The obligation of the City for payment to a Contractor is limited to the availability of funds appropriated in a current fiscal period, and continuation of the contract into a subsequent fiscal period is subject to appropriation of funds, unless otherwise provided by law.

(d) *Force Majeure.* The City and Contractor will be excused from the performance of their respective obligations under this agreement when and to the extent that their performance is delayed or prevented by any circumstances beyond their control including, fire, flood, explosion, strikes or other labor disputes, act of God or public emergency, war, riot, civil commotion,

malicious damage, act or omission of any governmental authority, delay or failure or shortage of any type of transportation, equipment, or service from a public utility needed for their performance, provided that:

i. The non performing party gives the other party prompt written notice describing the particulars of the Force Majeure including, but not limited to, the nature of the occurrence and its expected duration, and continues to furnish timely reports with respect thereto during the period of the Force Majeure;

ii. The excuse of performance is of no greater scope and of no longer duration than is reasonably necessary when considered in light of the Force Majeure;

iii. No obligations of either party that arose before the Force Majeure causing the excuse of performance are excused as a result of the Force Majeure; and

iv. The non-performing party uses its best efforts to remedy its inability to perform.

v. Notwithstanding the above, performance shall not be excused under this Section for a period in excess of sixty (60) days, provided that in extenuating circumstances, the City may excuse performance for a longer term. Economic hardship of the Contractor will not constitute Force Majeure. The term of the agreement shall be extended by a period equal to that during which either party's performance is suspended under this Section.

8. Materiality and Waiver of Breach.

(a) City and Contractor agree that each requirement, duty, and obligation set forth herein is substantial and important to the formation of this Agreement and that each is, therefore, a material term hereof. City's failure to enforce any provision of this Agreement shall not be deemed a waiver of such provision or modification of this Agreement. A waiver of any breach of a provision of this Agreement shall not be deemed a waiver of any subsequent breach and shall not be construed to be a modification of the terms of this Agreement.

9. Indemnification by Consultant.

CONSULTANT AGREES TO DEFEND, INDEMNIFY AND HOLD THE CITY AND ITS RESPECTIVE OFFICERS, AGENTS AND EMPLOYEES, HARMLESS AGAINST ANY AND ALL CLAIMS, LAWSUITS, JUDGMENTS, FINES, PENAL TIES, COSTS AND EXPENSES FOR ALL PROPERTY DAMAGE OR OTHER HARM OR VIOLATIONS FOR WHICH RECOVERY OF DAMAGES, FINES, OR PENAL TIES IS SOUGHT, SUFFERED BY ANY PERSON OR PERSONS, THAT MAY ARISE OUT OF OR BE OCCASIONED BY CONSULTANT'S BREACH OF ANY OF THE TERMS OR PROVISIONS OF THIS CONTRACT, VIOLATIONS OF LAW, OR BY ANY NEGLIGENT, GROSSLY NEGLIGENT, INTENTIONAL, OR STRICTLY LIABLE ACT OR OMISSION OF THE CONSULTANT, ITS OFFICERS, AGENTS, EMPLOYEES, INVITEES, SUBCONTRACTORS, OR SUB- SUBCONTRACTORS AND THEIR RESPECTIVE OFFICERS, AGENTS, OR REPRESENTATIVES, OR ANY OTHER PERSONS OR ENTITIES FOR WHICH THE CONSULTANT IS LEGALLY RESPONSIBLE IN THE PERFORMANCE OF THIS CONTRACT. THE CITY DOES NOT WAIVE ANY GOVERNMENTAL IMMUNITY OR OTHER DEFENSES AVAILABLE TO IT UNDER TEXAS OR FEDERAL LAW. THE PROVISIONS OF THIS PARAGRAPH ARE SOLELY FOR THE BENEFIT OF THE PARTIES HERETO AND ARE NOT INTENDED TO CREATE OR GRANT ANY RIGHTS, CONTRACTUAL OR OTHERWISE, TO ANY OTHER PERSON OR ENTITY.

CONSULTANT AT ITS OWN EXPENSE IS EXPRESSLY REQUIRED TO DEFEND CITY AGAINST ALL SUCH CLAIMS. CITY RESERVES THE RIGHT TO PROVIDE A PORTION OR ALL OF ITS OWN DEFENSE; HOWEVER, CITY IS UNDER NO OBLIGATION TO DO SO. ANY SUCH ACTION BY CITY IS NOT TO BE CONSTRUED AS A WAIVER OF CONSULTANT'S OBLIGATION TO DEFEND CITY OR AS A WAIVER OF

CONSULTANT'S OBLIGATION TO INDEMNIFY CITY PURSUANT TO THIS AGREEMENT. CONSULTANT SHALL RETAIN DEFENSE COUNSEL WITHIN SEVEN (7} BUSINESS DAYS OF CITY'S WRITTEN NOTICE THAT CITY IS INVOKING ITS RIGHT TO INDEMNIFICATION UNDER THIS AGREEMENT. IF CONSULTANT FAILS TO RETAIN COUNSEL WITHIN THE REQUIRED TIME PERIOD, CITY SHALL HAVE THE RIGHT TO RETAIN

DEFENSE COUNSEL ON ITS OWN BEHALF AND CONSULTANT SHALL BE LIABLE FOR ALL COSTS INCURRED BY THE CITY.

10. Miscellaneous Provisions.

(a) *Successors and Assigns.* All of the provisions of this Agreement shall be binding upon and inure to the benefit of the parties hereto and their respective heirs, if any, successors, and assigns.

(b) *Choice of Law.* The laws of the state of Texas shall govern the validity of this Agreement, the construction of its terms and the interpretation of the rights and duties of the parties hereto.

(c) *No Waiver of Governmental Immunity.* NOTHING IN THIS SECTION SHALL BE CONSTRUED TO WAIVE CITY'S GOVERNMENTAL IMMUNITY FROM LAWSUIT, WHICH IMMUNITY IS EXPRESSLY RETAINED TO THE EXTENT IT IS NOT CLEARLY AND UNAMBIGUOUSLY WAIVED BY STATE LAW.

(d) *Assignment.* Contractor shall not assign any of Contractor's rights under this Agreement, or delegate the performance of any of Contractor's duties hereunder, without the prior written consent of the City.

(e) *Modification or Amendment.* No amendment, change or modification of this Agreement shall be valid unless in writing signed by the parties hereto.

(f) *Venue.* This Agreement and any and all matters arising directly or indirectly herefrom shall be governed by and construed and enforced in accordance with the Laws of the State of Texas, with the Federal and State Courts of Cameron County, Texas having jurisdiction. (b) If at any time there is a dispute between or among the Parties with respect to any matter arising directly or indirectly from this Agreement (an "Agreement Matter"), the Parties agree that, prior to seeking judicial remedy, they will engage in face-to-face negotiations in an attempt to resolve such dispute and shall, upon failing to negotiate a mutually satisfactory resolution, choose a mutually agreeable neutral third party to mediate such dispute. Mediation shall be non-binding and shall be confidential.

Notices. Any and all notices, demands, or other communications required or desired to be given hereunder by any party shall be in writing and shall be validly given or made to another party if personally served, or if deposited in the United States mail, certified or registered, postage prepaid, return receipt requested. If such notice or demand is served personally, notice shall be deemed constructively made at the time of such personal service. If such notice, demand or other communication is given by mail, such notice shall be conclusively deemed given five days after deposit thereof in the United States mail addressed to the party to whom such notice, demand or other communication is to be given as follows:

If to Contractor: Terracon Consultants Inc.
1506 Mid Cities Dr.
Pharr, TX, 78577

If to City: City of Brownsville
1001 East Elizabeth St.
Brownsville, TX, 78520

Any party hereto may change its address for purposes of this paragraph by written notice given in the manner provided above.

(g) *Entire Understanding.* This document and any exhibit attached constitute the entire understanding and agreement of the parties, and any and all prior agreements, understandings, and representations are hereby terminated and canceled in their entirety and are of no further force and effect.

(h) *Unenforceability of Provisions.* If any provision of this Agreement, or any portion thereof, is held to be invalid and unenforceable, then the remainder of this Agreement shall nevertheless remain in full force and effect.

IN WITNESS WHEREOF the undersigned have executed this Agreement as of the day and year first written above.

CITY OF BROWNSVILLE	CONTRACTOR
Signature:	Signature:
Print Name: Trey Mender	Print Name: Jorge A. Flores, P.G.
Title: Mayor	Title: Senior Principal/Office Manager
Date: 10/02/2022	Date: 8-29-2022

Exhibit A

City of Brownsville Geotechnical Fee Schedule

Item Description	Unit	Rate	Prices have been confirmed unless otherwise noted.
CMT SERVICES - (Plasticity Index)	ea	$ 90.00	
CMT SERVICES - Standard Proctor (Moisture-Density Relationship)	ea	$ 250.00	
CMT SERVICES - In-place Density Tests	ea	$ 25.00	
CMT SERVICES - In-place asphalt cores (min. 3) 2" diameter	ea	$ 115.00	
CMT SERVICES - In-place asphalt cores (min. 3) 4" diameter	ea	$ 120.00	
CMT SERVICES - Compressive Strength Concrete Cyl (Incl. tech time, Min. 4)	ea	$ 75.00	
CMT SERVICES - Technician Standy-by Time	hr	$ 60.00	
CMT SERVICES - Trip Charge	ea	$ 60.00	
CMT SERVICES - Cylinder pick-up trip charge	ea	$ 300.00	Cylinder pick-up trip charge- if unit can be changed to hr it is $60
CMT SERVICES - Concrete Coring (4" diameter, Min. 4)	ea	$ 117.50	
CMT SERVICES - Sieve Analysis	ea	$ 120.00	
CMT SERVICES - Grout Compressive Strenght (4 Min)	ea	$ 20.00	
CMT SERVICES - Texas Triaxial	set	$ 1,900.00	
ASPHALT TESTING-Extraction –Gradation	ea	$ 200.00	
ASPHALT TESTING-Molding of Sample (Min. 3)	set	$ 185.00	
ASPHALT TESTING-Stability (Min. 3)	ea	$ 82.00	
ASPHALT TESTING-Asph Mix Des (Haveem Method)	set	$ 350.00	
ASPHALT TESTING-Lab. Molded Specific Gravity	ea	$ 185.00	
ASPHALT TESTING-Specific Gravity of Cored Samples	ea	$ 50.00	
ASPHALT TESTING-Rolling Pattern (2 HR Max. w/densities)	hr	$ 75.00	
EXISTING PAV INVESTIGATION - Core Exist Asph Pav: (Min. 3) Asphalt thickness, Caliche Base PI, Caliche Base Gradation, Subgrade PI	ea	$ 3,000.00	Includes: Coring Rig, Generator, Sieve Analysis, Plastic Index, -200 Sieve ,Bit wear, Patching, DCP, Technician, Trip, PE, CME Manager / Grad Eng.
GEO TECH LAB SERVICE -% Passing No. 200 Sieve	ea	$ 90.00	
GEO TECH LAB SERVICE-Moisture Content	ea	$ 25.00	
GEO TECH LAB SERVICE-Mortar Cube Compressive Strength (min.6)	ea	$ 25.00	
GEO TECH LAB SERVICE-Optimum Lime (PI)	ea	$ 540.00	
GEOTECH FIELD SRVC - Soil Test Boring 0 – 50 feet	ft	$ 15.00	
GEOTECH FIELD SRVC - Soil Test Boring 50 – 100 feet	ft	$ 20.00	
GEOTECH FIELD SRVC - Soil Test Boring, Wet Rotary	ft	$ 17.00	
GEOTECH FIELD SRVC - TxDOT-Texas Cone Penetrometer Test	ft	$ 22.00	
GEOTECH FIELD SRVC - Field Logging Services	hr	$ 75.00	
GEOTECH FIELD SRVC - Field Coordination	hr	$ 100.00	

GEOTECH FIELD SRVC - Mobilization (Lump Sum)	ea	$ 600.00	
GEOTECH FIELD SRVC - Concrete/Asphalt Pavement Patch	ea	$ 40.00	
GEOTECH FIELD SRVC - Plugging of Holes	ft	$ 8.00	
GEOTECH FIELD SRVC - Stand-by Time	hr	$ 350.00	
GEOTECH FIELD SRVC - Standard Penetration Test (SPT)	ea	$ 9.00	
GEOTECH FIELD SRVC - Shelby Tube Un-Disturbed Samples	ea	$ 115.00	
GEOTECH LAB SRVC - Sand Equivalent	ea	$ 110.00	
GEOTECH LAB SRVC - Linear Shrinkage	ea	$ 135.00	
GEOTECH LAB SRVC - PH	ea	$ 55.00	
GEOTECH LAB SRVC - Resistivity	ea	$ 305.00	
GEOTECH LAB SRVC - PH and Resisitivity	ea	$ 360.00	
GEOTECH LAB SRVC - Optimum Lime (pH)	ea	$ 330.00	
GEOTECH LAB SRVC - Max. Theo. Specific Gravity	ea	$ 115.00	
GEOTECH LAB SRVC - Specific Gravity	ea	$ 50.00	
GEOTECH LAB SRVC - Loose Unit Weight	ea	$ 50.00	
GEOTECH LAB SRVC - Rodded Unit Weight	ea	$ 50.00	
GEOTECH LAB SRVC - Split Tensile Strength of Concrete Cylinder (min. 2)	ea	$ 30.00	
GEOTECH LAB SRVC - Sawing of Cylinder Ends (Prep.)	ea	$ 5.00	
GEOTECH LAB SRVC - Wet Ball Mill	ea	$ 285.00	
GEOTECH LAB SRVC - Sulfate Content	ea	$ 105.00	
GEOTECH LAB SRVC - Corrositivity (pH, Resistivity, Sulfate & Chloride)	ea	$ 455.00	
GEOTECH LAB SRVC - Sieve Analysis (Up to No. 40 Sieve)	ea	$ 120.00	
GEOTECH LAB SRVC - Hydrometer	ea	$ 285.00	
GEOTECH LAB SRVC - Sieve and Hydrometer (All Sieves)	ea	$ 370.00	
GEOTECH LAB SRVC - Unit Dry Weight (Density)	ea	$ 15.00	
GEOTECH LAB SRVC - Constant Head Permeability, In Situ	ea	$ 200.00	
GEOTECH LAB SRVC - Unconfined Compression (Soil)	ea	$ 75.00	
GEOTECH LAB SRVC - Triaxial Compression, UU (Multi-Stage -Revised)	ea	$ 350.00	
GEOTECH LAB SRVC - Triaxial Compression, CD	ea	$ 275.00	
GEOTECH LAB SRVC - Direct Shear, UU	ea	$ 275.00	
GEOTECH LAB SRVC - Consolidation	ea	$ 600.00	
GEOTECH LAB SRVC - Swell Test, (Method A - Revised)	ea	$ 275.00	
GEOTECH LAB SRVC - Swell Test, (Method B - Revised)	ea	$ 275.00	
LAB TEST - Flexural Strength of Concrete Beams (Min. 3)	ea	$ 55.00	
LAB TEST - California Bearing Ratio (CBR)	set	$ 1,100.00	
ENGINEERING SERVICES - P.E.	hr	$ 185.00	
ENGINEERING SERVICES - E.I.T., Graduate Engineer	hr	$ 110.00	
ENGINEERING SERVICES - Draftsmen	hr	$ 65.00	
ENGINEERING SERVICES - Clerical	hr	$ 55.00	
ENGINEERING SERVICES - Technician	hr	$ 60.00	
ENGINEERING SERVICES - Geologist	hr	$ 160.00	

ENGINEERING SERVICES - Administrative Fee	hr	$ 55.00	
ENGINEERING SERVICES - Prof. Inspection (Welding, Steel, Etc.)	hr	$ 125.00	
ENGINEERING SRVC - PEIZOMETER/MONITORING WELL -	ea	na	
ENGINEERING SRVC - FLOOR FLATNESS TESTING -	ea	$ 800.00	
ENGINEERING SRVC - CONSTANT HEAD PERMEABILITY, UNDISTURBED -	ea	$ 235.00	

Exhibit B

Contract will commence upon City Commission approval and shall expire three years from date of approval. The City of Brownsville reserves the unilateral right to extend the life of the contract for two (2) periods of one (1) year each thereafter: if mutually acceptable to the contractor and the City of Brownsville.

REQUIRED CONTRACT PROVISIONS

2 CFR 200.327 Contract provisions. The non-Federal entity's contracts should contain applicable provisions described in Appendix II to Part 200—Contract Provisions for non-Federal Entity Contracts Under Federal Awards. The non-Federal entity's contracts must contain the provisions described in Appendix II to Part 200—Contract Provisions for non-Federal Entity Contracts Under Federal Awards, as applicable. ***Language as of March 28, 2022.**

All Contracts

THRESHOLD	PROVISION	CITATION
>$250,000 (Simplified Acquisition Threshold)	Contracts for more than the simplified acquisition threshold, which is the inflation adjusted amount determined by the Civilian Agency Acquisition Council and the Defense Acquisition Regulations Council (Councils) as authorized by 41 U.S.C. 1908, must address administrative, contractual, or legal remedies in instances where contractors violate or breach contract terms, and provide for such sanctions and penalties as appropriate.	2 CFR 200 APPENDIX II (A)
>$10,000	All contracts in excess of $10,000 must address termination for cause and for convenience by the non-Federal entity including the manner by which it will be effected and the basis for settlement.	2 CFR 200 APPENDIX II (B)
None	Equal Employment Opportunity. Except as otherwise provided under 41 CFR Part 60, all contracts that meet the definition of "federally assisted construction contract" in 41 CFR Part 60-1.3 must include the equal opportunity clause provided under 41 CFR 60-1.4(b), in accordance with Executive Order 11246, "Equal Employment Opportunity" (30 FR 12319, 12935, 3 CFR Part, 1964-1965 Comp., p. 339), as amended by Executive Order 11375, "Amending Executive Order 11246 Relating to Equal Employment Opportunity," and implementing regulations at 41 CFR part 60, "Office of Federal Contract Compliance Programs, Equal Employment Opportunity, Department of Labor." 41 CFR 60-1.4 Equal opportunity clause. (b) Federally assisted construction contracts. (1) Except as otherwise provided, each administering agency shall require the inclusion of the following language as a condition of any grant, contract, loan, insurance, or guarantee involving federally assisted construction which is not exempt from the requirements of the equal opportunity clause: The [recipient] hereby agrees that it will incorporate or cause to be incorporated into any contract for construction work, or modification thereof, as defined in the regulations of the Secretary of Labor at 41 CFR Chapter 60, which is paid for in whole or in part with funds obtained from the Federal Government or borrowed on the credit of the Federal Government pursuant to a grant, contract, loan, insurance, or guarantee, or undertaken pursuant to any Federal program involving such grant, contract, loan, insurance, or guarantee, the following equal opportunity clause: During the performance of this contract, the contractor agrees as follows:	2 CFR 200 APPENDIX II I and 41 CFR §60-1.4(b)

	(1) The contractor will not discriminate against any employee or applicant for employment because of race, color, religion, sex, sexual orientation, gender identity, or national origin. The contractor will take affirmative action to ensure that applicants are employed, and that employees are treated during employment without regard to their race, color, religion, sex, sexual orientation, gender identity, or national origin. Such action shall include, but not be limited to the following: Employment, upgrading, demotion, or transfer; recruitment or recruitment advertising; layoff or termination; rates of pay or other forms of compensation; and selection for training, including apprenticeship. The contractor agrees to post in conspicuous places, available to employees and applicants for employment, notices to be provided setting forth the provisions of this nondiscrimination clause. (2) The contractor will, in all solicitations or advertisements for employees placed by or on behalf of the contractor, state that all qualified applicants will receive consideration for employment without regard to race, color, religion, sex, sexual orientation, gender identity, or national origin. (3) The contractor will not discharge or in any other manner discriminate against any employee or applicant for employment because such employee or applicant has inquired about, discussed, or disclosed the compensation of the employee or applicant or another employee or applicant. This provision shall not apply to instances in which an employee who has access to the compensation information of other employees or applicants as a part of such employee's essential job functions discloses the compensation of such other employees or applicants to individuals who do not otherwise have access to such information, unless such disclosure is in response to a formal complaint or charge, in furtherance of an investigation, proceeding, hearing, or action, including an investigation conducted by the employer, or is consistent with the contractor's legal duty to furnish information. (4) The contractor will send to each labor union or representative of workers with which he has a collective bargaining agreement or other contract or understanding, a notice to be provided advising the said labor union or workers' representatives of the contractor's commitments under this section, and shall post copies of the notice in conspicuous places available to employees and applicants for employment. (5) The contractor will comply with all provisions of Executive Order 11246 of September 24, 1965, and of the rules, regulations, and relevant orders of the Secretary of Labor. (6) The contractor will furnish all information and reports required by Executive Order 11246 of September 24, 1965, and by rules, regulations, and orders of the Secretary of Labor, or pursuant thereto, and will permit access to his books, records, and accounts by the administering agency and the Secretary of Labor for purposes of investigation to ascertain compliance with such rules, regulations, and orders. (7) In the event of the contractor's noncompliance with the nondiscrimination clauses of this contract or with any of the said rules, regulations, or orders, this contract may be canceled, terminated, or	

	suspended in whole or in part and the contractor may be declared ineligible for further Government contracts or federally assisted construction contracts in accordance with procedures authorized in Executive Order 11246 of September 24, 1965, and such other sanctions may be imposed and remedies invoked as provided in Executive Order 11246 of September 24, 1965, or by rule, regulation, or order of the Secretary of Labor, or as otherwise provided by law. (8) The contractor will include the portion of the sentence immediately preceding paragraph (1) and the provisions of paragraphs (1) through (8) in every subcontract or purchase order unless exempted by rules, regulations, or orders of the Secretary of Labor issued pursuant to section 204 of Executive Order 11246 of September 24, 1965, so that such provisions will be binding upon each subcontractor or vendor. The contractor will take such action with respect to any subcontract or purchase order as the administering agency may direct as a means of enforcing such provisions, including sanctions for noncompliance: Provided, however, that in the event a contractor becomes involved in, or is threatened with, litigation with a subcontractor or vendor as a result of such direction by the administering agency, the contractor may request the United States to enter into such litigation to protect the interests of the United States. The [recipient] further agrees that it will be bound by the above equal opportunity clause with respect to its own employment practices when it participates in federally assisted construction work: Provided, that if the [recipient] so participating is a State or local government, the above equal opportunity clause is not applicable to any agency, instrumentality or subdivision of such government which does not participate in work on or under the contract. The recipient] agrees that it will assist and cooperate actively with the administering agency and the Secretary of Labor in obtaining the compliance of contractors and subcontractors with the equal opportunity clause and the rules, regulations, and relevant orders of the Secretary of Labor, that it will furnish the administering agency and the Secretary of Labor such information as they may require for the supervision of such compliance, and that it will otherwise assist the recipientring agency in the discharge of the agency's primary responsibility for securing compliance. The recipient further agrees that it will refrain from entering into any contract or contract modification subject to Executive Order 11246 of September 24, 1965, with a contractor debarred from, or who has not demonstrated eligibility for, Government contracts and federally assisted construction contracts pursuant to the Executive Order and will carry out such sanctions and penalties for violation of the equal opportunity clause as may be imposed upon contractors and subcontractors by the administering agency or the Secretary of Labor pursuant to Part II, Subpart D of the Executive Order. In addition, the [recipient] agrees that if it fails or refuses to comply with these undertakings, the administering agency may take any or all of the following actions: Cancel, terminate, or	

	suspend in whole or in part this grant (contract, loan, insurance, guarantee); refrain from extending any further assistance to the [recipient] under the program with respect to which the failure or refund occurred until satisfactory assurance of future compliance has been received from such [recipient]; and refer the case to the Department of Justice for appropriate legal proceedings.	
>$10,000,000 for ARPA but State Provision Applies at any amount. Applies to all public works projects	Davis-Bacon Act, as amended (40 U.S.C. 3141-3148). When required by Federal program legislation, all prime construction contracts in excess of $10,000,00 awarded by non-Federal entities must include a provision for compliance with the Davis-Bacon Act (40 U.S.C. 3141-3144, and 3146-3148) as supplemented by Department of Labor regulations (29 CFR Part 5, "Labor Standards Provisions Applicable to Contracts Covering Federally Financed and Assisted Construction"). In accordance with the statute, contractors must be required to pay wages to laborers and mechanics at a rate not less than the prevailing wages specified in a wage determination made by the Secretary of Labor. In addition, contractors must be required to pay wages not less than once a week. The non-Federal entity must place a copy of the current prevailing wage determination issued by the Department of Labor in each solicitation. The decision to award a contract or subcontract must be conditioned upon the acceptance of the wage determination. The non-Federal entity must report all suspected or reported violations to the Federal awarding agency. The contracts must also include a provision for compliance with the Copeland "Anti-Kickback" Act (40 U.S.C. 3145), as supplemented by Department of Labor regulations (29 CFR Part 3, "Contractors and Subcontractors on Public Building or Public Work Financed in Whole or in Part by Loans or Grants from the United States"). The Act provides that each contractor or subrecipient must be prohibited from inducing, by any means, any person employed in the construction, completion, or repair of public work, to give up any part of the compensation to which he or she is otherwise entitled. The non-Federal entity must report all suspected or reported violations to the Federal awarding agency.	2 CFR 200 APPENDIX II (D)
>$100,000	Contract Work Hours and Safety Standards Act (40 U.S.C. 3701-3708). Where applicable, all contracts awarded by the non-Federal entity in excess of $100,000 that involve the employment of mechanics or laborers must include a provision for compliance with 40 U.S.C. 3702 and 3704, as supplemented by Department of Labor regulations (29 CFR Part 5). Under 40 U.S.C. 3702 of the Act, each contractor must be required to compute the wages of every mechanic and laborer on the basis of a standard work week of 40 hours. Work in excess of the standard work week is permissible provided that the worker is compensated at a rate of not less than one and a half times the basic rate of pay for all hours worked in excess of 40 hours in the work week. The requirements of 40 U.S.C. 3704 are applicable to construction work and provide that no laborer or mechanic must be required to work in surroundings or under working conditions which are unsanitary, hazardous or dangerous. These requirements do not apply to the purchases of supplies or materials or articles ordinarily available on the open market, or contracts for transportation or transmission of intelligence.	2 CFR 200 APPENDIX II I

None	Rights to Inventions Made Under a Contract or Agreement. If the Federal award meets the definition of "funding agreement" under 37 CFR § 401.2 (a) and the recipient or subrecipient wishes to enter into a contract with a small business firm or nonprofit organization regarding the substitution of parties, assignment or performance of experimental, developmental, or research work under that "funding agreement," the recipient or subrecipient must comply with the requirements of 37 CFR Part 401, "Rights to Inventions Made by Nonprofit Organizations and Small Business Firms Under Government Grants, Contracts and Cooperative Agreements," and any implementing regulations issued by the awarding agency.	2 CFR 200 APPENDIX II (F)
>$150,000	Clean Air Act (42 U.S.C. 7401-7671q.) and the Federal Water Pollution Control Act (33 U.S.C. 1251-1387), as amended – Contracts and subgrants of amounts in excess of $150,000 must contain a provision that requires the non-Federal award to agree to comply with all applicable standards, orders or regulations issued pursuant to the Clean Air Act (42 U.S.C. 7401-7671q) and the Federal Water Pollution Control Act as amended (33 U.S.C. 1251-1387). Violations must be reported to the Federal awarding agency and the Regional Office of the Environmental Protection Agency (EPA).	2 CFR 200 APPENDIX II (G)
>$25,000	Debarment and Suspension (Executive Orders 12549 and 12689) – A contract award (see 2 CFR 180.220) must not be made to parties listed on the governmentwide exclusions in the System for Award Management (SAM), in accordance with the OMB guidelines at 2 CFR 180 that implement Executive Orders 12549 (3 CFR part 1986 Comp., p. 189) and 12689 (3 CFR part 1989 Comp., p. 235), "Debarment and Suspension." SAM Exclusions contains the names of parties debarred, suspended, or otherwise excluded by agencies, as well as parties declared ineligible under statutory or regulatory authority other than Executive Order 12549.	2 CFR 200 APPENDIX II (H)
>$100,000	Byrd Anti-Lobbying Amendment (31 U.S.C. 1352) – Contractors that apply or bid for an award exceeding $100,000 must file the required certification. Each tier certifies to the tier above that it will not and has not used Federal appropriated funds to pay any person or organization for influencing or attempting to influence an officer or employee of any agency, a member of Congress, officer or employee of Congress, or an employee of a member of Congress in connection with obtaining any Federal contract, grant or any other award covered by 31 U.S.C. 1352. Each tier must also disclose any lobbying with non-Federal funds that takes place in connection with obtaining any Federal award. Such disclosures are forwarded from tier to tier up to the non-Federal award.	2 CFR 200 APPENDIX II (I) and 24 CFR §570.303
	See 2 CFR §200.323.	2 CFR 200 APPENDIX II (J)
	See 2 CFR §200.216.	2 CFR 200 APPENDIX II (K)
	See 2 CFR §200.322.	2 CFR 200

		APPENDIX II (L)
>$10,000	An NFE (non-Federal Entity) that is a state agency or an agency of a political subdivision of a state, and the NFE's contractors must comply with Section 6002 of the Solid Waste Disposal Act.56 Applicable NFEs must include a contract provision requiring compliance with this requirement.57 This includes contracts awarded by a state agency or political subdivision of a state and its contractors for certain items, as designated by the EPA, with a purchase price greater than $10,000.58 Indian Tribal Governments and nonprofit organizations are not required to comply with this provision. Additional requirements are listed below.	2 CFR 200.323
None	Section 889(b)(1) of the John S. McCain National Defense Authorization Act for Fiscal Year 2019 (FY2019 NDAA) and 2 C.F.R. § 200.216, as implemented by FEMA Policy 405-143-1, Prohibitions on Expending FEMA Award Funds for Covered Telecommunications Equipment or Services (Interim), prohibit the obligation or expending of federal award funds on certain telecommunication products or from certain entities for national security reasons. Effective August 13, 2020, FEMA recipients and subrecipients, as well as their contractors and subcontractors, may not obligate or expend any FEMA award funds to: a. Procure or obtain any equipment, system, or service that uses covered telecommunications equipment or services as a substantial or essential component of any system, or as critical technology of any system; b. Enter into, extend, or renew a contract to procure or obtain any equipment, system, or service that uses covered telecommunications equipment or services as a substantial or essential component of any system, or as critical technology of any system; or c. Enter into, extend, or renew contracts with entities that use covered telecommunications equipment or services as a substantial or essential component of any system, or as critical technology as part of any system.	2 CFR 200.216
None	As appropriate and to the extent consistent with law, the non-Federal entity should, to the greatest extent practicable under a Federal award, provide a preference for the purchase, acquisition, or use of goods, products, or materials produced in the United States (including but not limited to iron, aluminum, steel, cement, and other manufactured products). The requirements of this section must be included in all subawards including all contracts and purchase orders for work or products under this award. For purposes of this section: (1) "Produced in the United States" means, for iron and steel products, that all manufacturing processes, from the initial melting stage through the application of coatings, occurred in the United States. (2) "Manufactured products" means items and construction materials composed in whole or in part of non-ferrous metals such as aluminum; plastics and polymer-based products such as polyvinyl chloride pipe; aggregates such as concrete; glass, including optical fiber; and lumber.	2 CFR 200.322(a)(b)(1) (2)

None	The Federal awarding agency must establish conflict of interest policies for Federal awards. The non-Federal entity must disclose in writing any potential conflict of interest to the Federal awarding agency or pass-through entity in accordance with applicable Federal awarding agency policy.	2 CFR 200.112
None	The Federal awarding agency and the non-Federal entity should, whenever practicable, collect, transmit, and store Federal award-related information in open and machine-readable formats rather than in closed formats or on paper in accordance with applicable legislative requirements. A machine-readable format is a format in a standard computer language (not English text) that can be read automatically by a web browser or computer system. The Federal awarding agency or pass-through entity must always provide or accept paper versions of Federal award-related information to and from the non-Federal entity upon request. If paper copies are submitted, the Federal awarding agency or pass-through entity must not require more than an original and two copies. When original records are electronic and cannot be altered, there is no need to create and retain paper copies. When original records are paper, electronic versions may be substituted through the use of duplication or other forms of electronic media provided that they are subject to periodic quality control reviews, provide reasonable safeguards against alteration, and remain readable.	2 CFR 200.336
None	Contracting with HUB, small and minority businesses, women's business enterprises, and labor surplus area firms. (a) The non-Federal entity must take all necessary affirmative steps to assure that minority businesses, women's business enterprises, and labor surplus area firms are used when possible. (b) Affirmative steps must include: (1) Placing qualified small and minority businesses and women's business enterprises on solicitation lists; (2) Assuring that small and minority businesses, and women's business enterprises are solicited whenever they are potential sources; (3) Dividing total requirements, when economically feasible, into smaller tasks or quantities to permit maximum participation by small and minority businesses, and women's business enterprises; (4) Establishing delivery schedules, where the requirement permits, which encourage participation by small and minority businesses, and women's business enterprises; (5) Using the services and assistance, as appropriate, of such organizations as the Small Business Administration and the Minority Business Development Agency of the Department of Commerce; and (6) Requiring the prime contractor, if subcontracts are to be let, to take the affirmative steps listed in paragraphs (b)(1) through (5) of this section.	2 CFR 200.321

None	Financial records, supporting documents, statistical records, and all other non-Federal entity records pertinent to a Federal award must be retained for a period of three years from the date of submission of the final expenditure report or, for Federal awards that are renewed quarterly or annually, from the date of the submission of the quarterly or annual financial report, respectively, as reported to the Federal awarding agency or pass-through entity in the case of a subrecipient. Federal awarding agencies and pass-through entities must not impose any other record retention requirements upon non-Federal entities. The only exceptions are the following: (a) If any litigation, claim, or audit is started before the expiration of the 3-year period, the records must be retained until all litigation, claims, or audit findings involving the records have been resolved and final action taken. (b) When the non-Federal entity is notified in writing by the Federal awarding agency, cognizant agency for audit, oversight agency for audit, cognizant agency for indirect costs, or pass-through entity to extend the retention period. (c) Records for real property and equipment acquired with Federal funds must be retained for 3 years after final disposition. (d) When records are transferred to or maintained by the Federal awarding agency or pass-through entity, the 3-year retention requirement is not applicable to the non-Federal entity. (e) Records for program income transactions after the period of performance. In some cases, recipients must report program income after the period of performance. Where there is such a requirement, the retention period for the records pertaining to the earning of the program income starts from the end of the non-Federal entity's fiscal year in which the program income is earned. (f) Indirect cost rate proposals and cost allocations plans. This paragraph applies to the following types of documents and their supporting records: Indirect cost rate computations or proposals, cost allocation plans, and any similar accounting computations of the rate at which a particular group of costs is chargeable (such as computer usage chargeback rates or composite fringe benefit rates). (1) *If submitted for negotiation.* If the proposal, plan, or other computation is required to be submitted to the Federal Government (or to the pass-through entity) to form the basis for negotiation of the rate, then the 3-year retention period for its supporting records starts from the date of such submission. (2) *If not submitted for negotiation.* If the proposal, plan, or other computation is not required to be submitted to the Federal Government (or to the pass-through entity) for negotiation purposes, then the 3-year retention period for the proposal, plan, or computation and its supporting records starts from the end of the fiscal year (or other accounting period) covered by the proposal, plan, or other computation.	2 CFR 200.334

None	CONTRACTS WITH COMPANIES ENGAGED IN BUSINESS WITH IRAN, SUDAN, OR FOREIGN TERRORIST ORGANIZATION PROHIBITED. A governmental entity may not enter into a governmental contract with a company that is identified on a list prepared and maintained under Section 806.051, 807.051, or 2252.153.The term "foreign terrorist organization" in this paragraph has the meaning assigned to such a term in Section 2252.151(2) of the Texas Government Code.	Texas Government Code 2252.152
>$100,000	PROVISION REQUIRED IN CONTRACT. (a) This section applies only to a contract that: (1) is between a governmental entity and a company with 10 or more full-time employees; and (2) has a value of $100,000 or more that is to be paid wholly or partly from public funds of the governmental entity. (b) A governmental entity may not enter into a contract with a company for goods or services unless the contract contains a written verification from the company that it: (1) does not boycott Israel; and (2) will not boycott Israel during the term of the contract.	Texas Government Code 2271
Option Contract Language for contracts awarded prior to Grant Award	The contract award is contingent upon the receipt of ARPA funds. If no such funds are awarded, the contract shall terminate.	Optional
	Mandatory standards and policies relating to energy efficiency which are contained in the state energy conservation plan issued in compliance with the Energy Policy and Conservation Act.	42 U.S.C. 6201
	The Firm agrees that no otherwise qualified individual with disabilities shall, solely by reason of his/her disability, be denied the benefits of, or be subjected to discrimination, including discrimination in employment, under any program or activity receiving federal financial assistance.	Section 504 of the Rehabilitation Act of 1973, as amended.

Insert System for Award Management (SAM) Record Search for company name and company principal

(Supplied by Proposal Responder/Bidder i.e. Vendor)

SAM.GOV®

TERRACON CONSULTANTS, INC.

ALERT! This entity is only available FOR OFFICIAL USE ONLY.

DUNS Unique Entity ID	SAM Unique Entity ID	CAGE / NCAGE
613569961	**MG15GZJ9BES5**	**1DJP8**
Purpose of Registration	Registration Status	Expiration Date
All Awards	**Active**	**Sep 13, 2022**
Physical Address	Mailing Address	
10841 S Ridgeview RD **Olathe, Kansas 66061-6456** **United States**	**10841 S Ridgeview RD** **Olathe, Kansas 66061-6456** **United States**	

Business Information

Doing Business as	Division Name	Division Number
(blank)	**(blank)**	**(blank)**
Congressional District	State / Country of Incorporation	URL
Kansas 03	**Delaware / United States**	**http://www.terracon.com**
MPIN		
********CON1**		

Registration Dates

Activation Date	Submission Date	Initial Registration Date
Sep 14, 2021	**Sep 13, 2021**	**Jan 15, 2002**

Entity Dates

Entity Start Date	Fiscal Year End Close Date
Apr 22, 1965	**Dec 31**

Immediate Owner

CAGE	Legal Business Name
7ELA3	**TSVC, INC.**

Highest Level Owner

CAGE	Legal Business Name
7E5X8	**T T COMPANIES, INC.**

Executive Compensation

In your business or organization's preceding completed fiscal year, did your business or organization (the legal entity to which this specific SAM record, represented by a DUNS number, belongs) receive both of the following: 1. 80 percent or more of your annual gross revenues in U.S. federal contracts, subcontracts, loans, grants, subgrants, and/or cooperative agreements and 2. $25,000,000 or more in annual gross revenues from U.S. federal contracts, subcontracts, loans, grants, subgrants, and/or cooperative agreements?

No

Does the public have access to information about the compensation of the senior executives in your business or organization (the legal entity to which this specific SAM record, represented by a DUNS number, belongs) through periodic reports filed under section 13(a) or 15(d) of the Securities Exchange Act of 1934 (15 U.S.C. 78m(a), 78o(d)) or section 6104 of the Internal Revenue Code of 1986?

Not Selected

Proceedings Questions

Is your business or organization, as represented by the DUNS Number on this entity registration, responding to a Federal procurement opportunity that contains the provision at FAR 52.209-7, subject to the clause in FAR 52.209-9 in a current Federal contract, or applying for a Federal grant opportunity which contains the award term and condition described in 2 C.F.R. 200 Appendix XII?

No

Does your business or organization, as represented by the DUNS number on this specific SAM record, have current active Federal contracts and/or grants with total value (including any exercised/unexercised options) greater than $10,000,000?

Not Selected

Within the last five years, had the business or organization (represented by the DUNS number on this specific SAM record) and/or any of its principals, in

finding of fault with either a monetary fine or penalty greater than $5,000 or reimbursement, restitution, or damages greater than $100,000, or other acknowledgment of fault?

Not Selected

Exclusion Summary

Active Exclusions Records?

No

SAM Search Authorization

I authorize my entity's non-sensitive information to be displayed in SAM public search results:

Yes

Entity Types

Business Types

Entity Structure	Entity Type	Organization Factors
Corporate Entity (Not Tax Exempt)	**Business or Organization**	**(blank)**

Profit Structure

For Profit Organization

Socio-Economic Types

Check the registrant's Reps & Certs, if present, under FAR 52.212-3 or FAR 52.219-1 to determine if the entity is an SBA-certified HUBZone small business concern. Additional small business information may be found in the SBA's Dynamic Small Business Search if the entity completed the SBA supplemental pages during registration.

Financial Information

Accepts Credit Card Payments	Debt Subject To Offset
Yes	**No**

EFT Indicator	CAGE Code
0000	**1DJP8**

Electronic Funds Transfer

Account Type	Routing Number	Lock Box Number
Financial Institution	Account Number	

Automated Clearing House

Phone (U.S.)	Email	Phone (non-U.S.)
Fax		

Remittance Address

Taxpayer Information

EIN	Type of Tax	Taxpayer Name
*****9917	**Applicable Federal Tax**	**TERRACON CONSULTANTS INC**
Tax Year (Most Recent Tax Year)	Name/Title of Individual Executing Consent	TIN Consent Date
2020	**Director Of Accounting**	**Sep 13, 2021**

Address

10841 S Ridgeview RD
Olathe, Kansas 66061

Points of Contact

Accounts Receivable POC

Wayne S Schweizer
Wayne.Schweizer@terracon.com
9135996886

Compliance
monica.curls@terracon.com
9132027528

United States

Jeff Davis, National Director of Federal Services
jeff.davis@terracon.com
9492795088

1421 Edinger AVE.
Tustin, California 92780
United States

Government Business

Monica Curls, Manager of Government Compliance
monica.curls@terracon.com
9132027528

10841 S. Ridgeview Road
Olathe, Kansas 66061
United States

Jeri Rease, Senior Corporate Marketing Strategist
jeri.rease@terracon.com
9139092728

10841 S. Ridgeview Road
Olathe, Kansas 66061
United States

Security Information

Company Security Level
(blank)

Highest Level Employee Security Level
(blank)

Service Classifications

NAICS Codes

Primary	NAICS Codes	NAICS Title
Yes	**541330**	**Engineering Services**
	541310	**Architectural Services**
	541350	**Building Inspection Services**
	541360	**Geophysical Surveying And Mapping Services**
	541380	**Testing Laboratories**
	541618	**Other Management Consulting Services**
	541620	**Environmental Consulting Services**
	541690	**Other Scientific And Technical Consulting Services**
	561210	**Facilities Support Services**
	561990	**All Other Support Services**
	562910	**Remediation Services**
	611430	**Professional And Management Development Training**
	712120	**Historical Sites**

Size Metrics

IGT Size Metrics

Annual Revenue (from all IGTs)
(blank)

Worldwide

Annual Receipts (in accordance with 13 CFR 121)
$791,485,020.00

Number of Employees (in accordance with 13 CFR 121)
5050

Location

Annual Receipts (in accordance with 13 CFR 121)
(blank)

Number of Employees (in accordance with 13 CFR 121)
(blank)

Industry-Specific

Electronic Data Interchange (EDI) Information

This entity did not enter the EDI information

Disaster Response

Yes, this entity appears in the disaster response registry.

Bonding Levels	Dollars
(blank)	**(blank)**

States	Counties	Metropolitan Statistical Areas
Any	**(blank)**	**(blank)**

Conflict of Interest Questionnaire – Form CIQ

CONFLICT OF INTEREST QUESTIONNAIRE — FORM CIQ

For vendor doing business with local governmental entity

This questionnaire reflects changes made to the law by H.B. 23, 84th Leg., Regular Session. This questionnaire is being filed in accordance with Chapter 176, Local Government Code, by a vendor who has a business relationship as defined by Section 176.001(1-a) with a local governmental entity and the vendor meets requirements under Section 176.006(a). By law this questionnaire must be filed with the records administrator of the local governmental entity not later than the 7th business day after the date the vendor becomes aware of facts that require the statement to be filed. *See* Section 176.006(a-1), Local Government Code. A vendor commits an offense if the vendor knowingly violates Section 176.006, Local Government Code. An offense under this section is a misdemeanor.	**OFFICE USE ONLY** Date Received

1 **Name of vendor who has a business relationship with local governmental entity.**

N/A

2 ☐ **Check this box if you are filing an update to a previously filed questionnaire.** (The law requires that you file an updated completed questionnaire with the appropriate filing authority not later than the 7th business day after the date on which you became aware that the originally filed questionnaire was incomplete or inaccurate.)

3 **Name of local government officer about whom the information is being disclosed.**

N/A

Name of Officer

4 **Describe each employment or other business relationship with the local government officer, or a family member of the officer, as described by Section 176.003(a)(2)(A). Also describe any family relationship with the local government officer. Complete subparts A and B for each employment or business relationship described. Attach additional pages to this Form CIQ as necessary.**

A. Is the local government officer or a family member of the officer receiving or likely to receive taxable income, other than investment income, from the vendor?

☐ Yes ☐ No

B. Is the vendor receiving or likely to receive taxable income, other than investment income, from or at the direction of the local government officer or a family member of the officer AND the taxable income is not received from the local governmental entity?

☐ Yes ☐ No

5 **Describe each employment or business relationship that the vendor named in Section 1 maintains with a corporation or other business entity with respect to which the local government officer serves as an officer or director, or holds an ownership interest of one percent or more.**

6 ☐ Check this box if the vendor has given the local government officer or a family member of the officer one or more gifts as described in Section 176.003(a)(2)(B), excluding gifts described in Section 176.003(a-1).

7 Jorge A. Flores, P.G. 7-11-22

Signature of vendor doing business with the governmental entity — Date

Form provided by Texas Ethics Commission — www.ethics.state.tx.us — Revised 11/30/2015

CONFLICT OF INTEREST QUESTIONNAIRE
For vendor doing business with local governmental entity

A complete copy of Chapter 176 of the Local Government Code may be found at http://www.statutes.legis.state.tx.us/Docs/LG/htm/LG.176.htm. For easy reference, below are some of the sections cited on this form.

Local Government Code § 176.001(1-a): "Business relationship" means a connection between two or more parties based on commercial activity of one of the parties. The term does not include a connection based on:

(A) a transaction that is subject to rate or fee regulation by a federal, state, or local governmental entity or an agency of a federal, state, or local governmental entity;

(B) a transaction conducted at a price and subject to terms available to the public; or

(C) a purchase or lease of goods or services from a person that is chartered by a state or federal agency and that is subject to regular examination by, and reporting to, that agency.

Local Government Code § 176.003(a)(2)(A) and (B):

(a) A local government officer shall file a conflicts disclosure statement with respect to a vendor if:

***

(2) the vendor:

(A) has an employment or other business relationship with the local government officer or a family member of the officer that results in the officer or family member receiving taxable income, other than investment income, that exceeds $2,500 during the 12-month period preceding the date that the officer becomes aware that

(i) a contract between the local governmental entity and vendor has been executed; or

(ii) the local governmental entity is considering entering into a contract with the vendor;

(B) has given to the local government officer or a family member of the officer one or more gifts that have an aggregate value of more than $100 in the 12-month period preceding the date the officer becomes aware that:

(i) a contract between the local governmental entity and vendor has been executed; or

(ii) the local governmental entity is considering entering into a contract with the vendor.

Local Government Code § 176.006(a) and (a-1)

(a) A vendor shall file a completed conflict of interest questionnaire if the vendor has a business relationship with a local governmental entity and:

(1) has an employment or other business relationship with a local government officer of that local governmental entity, or a family member of the officer, described by Section 176.003(a)(2)(A);

(2) has given a local government officer of that local governmental entity, or a family member of the officer, one or more gifts with the aggregate value specified by Section 176.003(a)(2)(B), excluding any gift described by Section 176.003(a-1); or

(3) has a family relationship with a local government officer of that local governmental entity.

(a-1) The completed conflict of interest questionnaire must be filed with the appropriate records administrator not later than the seventh business day after the later of:

(1) the date that the vendor:

(A) begins discussions or negotiations to enter into a contract with the local governmental entity; or

(B) submits to the local governmental entity an application, response to a request for proposals or bids, correspondence, or another writing related to a potential contract with the local governmental entity; or

(2) the date the vendor becomes aware:

(A) of an employment or other business relationship with a local government officer, or a family member of the officer, described by Subsection (a);

(B) that the vendor has given one or more gifts described by Subsection (a); or

(C) of a family relationship with a local government officer.

Instructions, searching existing data sources, gathering and maintaining the data needed, and completing and reviewing the collection of information. Send comments regarding the burden estimate or any other aspect of this collection of information, including suggestions for reducing this burden, to the Office of Management and Budget, Paperwork Reduction Project (0348-0046), Washington, DC 20503

Approved by OMB
0348-0046 N/A

Disclosure of Lobbying Activities

Complete this form to disclose lobbying activities pursuant to 31 U.S.C. 1352
(See reverse for public burden disclosure)

Type of Federal Action: a. contract ____ b. grant c. cooperative agreement d. loan e. loan guarantee f. loan insurance	**Status of Federal Action:** a. bid/offer/application _____ b. initial award c. post-award	**Report Type:** a. initial filing _____ b. material change

Name and Address of Reporting Entity: ____ Prime _____ Subawardee Tier_____, if Known: **Congressional District, if known:**	**If Reporting Entity in No. 4 is Subawardee,** Enter Name and Address of Prime: **Congressional District, if known:**
Federal Department/Agency:	**7. Federal Program Name/Description:** **CFDA Number,** *if applicable:*
Federal Action Number, *if known:*	**9. Award Amount,** *if known:* **$**
10. a. Name and Address of Lobbying Registrant *(if individual, last name, first name, MI):*	**b. Individuals Performing Services** *(including address if different from No. 10a)* *(last name, first name, MI):*
11. Information requested through this form is authorized by title 31 U.S.C. section 1352. This disclosure of lobbying activities is a material representation of fact upon which reliance was placed by the tier above when this transaction was made or entered into. This disclosure is required pursuant to 31 U.S.C. 1352. This information will be reported to the Congress semi-annually and will be available for public inspection. Any person who fails to file the required disclosure shall be subject to a civil penalty of not less than $10,000 and not more than $100,000 for each such failure.	**Signature:** 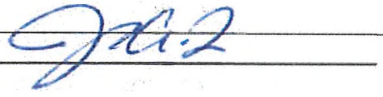 **Print Name:** Jorge A. Flores, P.G. **Title:** Senior Principal/Office Manager **Telephone No.:** 956-283-8254 **Date:** 8-29-2022
Federal Use Only	**Authorized for Local Reproduction** **Standard Form - LLL (Rev. 7-97)**

City of Brownsville
Procurement Department

First Renewal for the Term Contract for Geotechnical and Construction Material Testing Service on a Pre-Approved Vendor List for Street and Drainage Improvement Projects and Miscellaneous Projects for the City of Brownsville
 # GTS-67-0622

This **FIRST** Renewal ("Renewal") to the contract for Geotechnical and Construction Material Testing Service for the City of Brownsville **GTS-67-0622** ("Agreement") by and between The City of Brownsville ("City"), a Texas municipal corporation, and **Terracon Consultants Inc.** ("Contractor"), is entered into after approval by City Commission and/or City Manager, and as to the last party to sign the Renewal as dated below (the "Effective Date"). City and Contractor are collectively referred to as the "Parties."

WHEREAS, City has recognized the necessity to renew the abovementioned contract with the Contractor; and

WHEREAS, the City and Contractor now desire to renew the Agreement as stated herein.

NOW, THEREFORE, for good and valuable consideration, the receipt and adequacy of which is acknowledged, the parties hereby agree as follows:

The renewal of the contract will be from **September 20, 2025, through September 20, 2026**.

- **Initial contract terms and renewals**:
  - The initial contract period was from **September 20, 2022, through September 20, 2025**.
  - This first renewal of the contract will be from **September 20, 2025 – September 20, 2026**.
  - A second and final renewal period may extend from **September 20, 2026 – September 20, 2027**, subject to mutual agreement.

These services shall be in accordance with the terms of the Agreement. Either Party may terminate the Agreement with not less than 60 days' written notice.

Except as amended herein, the terms and conditions of the Agreement between City and Contractor shall remain in full force and effect.

IN WITNESS WHEREOF, City and Contractor have executed this Renewal to the Agreement as of the last date written below.

Terracon Consultants Inc.

By: Jorge A. Flores

Title: Senior Principal

Date: 09/04/2025

City of Brownsville, Texas

By: Helen Ramirez

Title: City Manager 2025-09-18

Da APPROVED AS TO FORM

APPROVED AS TO FORM

Alyssa J. Castillon
Assistant City Attorney

1

CERTIFICATE *of* SIGNATURE

REF. NUMBER
CYDWY-ES3P8-XDVRN-PMBLT

DOCUMENT COMPLETED BY ALL PARTIES ON
18 SEP 2025 21:01:25
UTC

SIGNER	TIMESTAMP	SIGNATURE
HELEN RAMIREZ EMAIL HELEN.RAMIREZ@BROWNSVILLETX.GOV	SENT 18 SEP 2025 19:02:56 VIEWED 18 SEP 2025 21:00:41 SIGNED 18 SEP 2025 21:01:25	 IP ADDRESS 72.178.148.115 LOCATION BROWNSVILLE, UNITED STATES

RECIPIENT VERIFICATION

EMAIL VERIFIED
18 SEP 2025 21:00:41

Form 2 - Statement Of Conflicts Of Interest (If Any)

Conflict of Interest Disclosure Instructions

The Respondent must disclose any conflicts of interest related to the goods and/or services associated with this solicitation. A conflict-of-interest statement is required if any conflicts exist, along with a detailed plan for mitigating the conflict(s). The City reserves the sole discretion to determine whether a conflict disqualifies a firm and/or whether a conflict mitigation plan is acceptable.

If a conflict of interest exists, the Respondent must:

- Complete Form CIQ
- File the form with the City Secretary
- Include a copy of the completed Form CIQ with the proposal

If no conflict of interest exists, Form CIQ is not required. Regardless of whether a conflict exists, this Form 2 must be completed and signed.

Respondent Acknowledgment

By signing below, the Respondent certifies and acknowledges the following:

1. The Respondent has reviewed the requirements of Chapter 176, Texas Local Government Code, regarding conflict-of-interest disclosures.
2. The Respondent understands that a completed Texas Ethics Commission Form CIQ must be filed with the City Secretary's Office of the City of Brownsville, Texas, within seven (7) business days after the Respondent becomes aware of a conflict.
3. The Respondent acknowledges that the completed Form CIQ is a public record and will be made available by the City Secretary in accordance with state law.
4. The Respondent understands that failure to file a required Form CIQ is a violation of state law and may result in penalties under Texas Local Government Code §176.006 and possible disqualification from consideration for award.
5. The Respondent shall submit this acknowledgment form as part of its solicitation response and attach a copy of the completed TEC Form CIQ, if applicable.

City Secretary Contact Information

City of Brownsville – Office of the City Secretary
1001 East Elizabeth Street, Brownsville, Texas 78520
Email: citysecretary@brownsvilletx.gov
Phone: (956) 548-6000

Certification

By signing below, the Respondent certifies that they have reviewed and understand the requirements of Chapter 176, Texas Local Government Code and have determined whether a conflict of interest exists. The Respondent further certifies that, if a conflict of interest exists, a completed Conflict of Interest Questionnaire (Form CIQ) has been or will be filed with the City Secretary in accordance with state law and that a copy of the completed Form CIQ is included with this submission, if applicable. The Respondent affirms that all information provided is true and correct and that they are authorized to bind the entity.

Signature: _____

Printed Name: Jorge A. Flores, P.G.

Title: Senior Principal/Operations Manager

Date: 7-8-2026

Company Name: Terracon Consultants, Inc.

Phone: 956-283-8254

Email: jorge.flores@terracon.com

CONFLICT OF INTEREST QUESTIONNAIRE

FORM CIQ

For vendor doing business with local governmental entity

This questionnaire reflects changes made to the law by H.B. 23, 84th Leg., Regular Session.

This questionnaire is being filed in accordance with Chapter 176, Local Government Code, by a vendor who has a business relationship as defined by Section 176.001(1-a) with a local governmental entity and the vendor meets requirements under Section 176.006(a).

By law this questionnaire must be filed with the records administrator of the local governmental entity not later than the 7th business day after the date the vendor becomes aware of facts that require the statement to be filed. *See* Section 176.006(a-1), Local Government Code.

A vendor commits an offense if the vendor knowingly violates Section 176.006, Local Government Code. An offense under this section is a misdemeanor.

OFFICE USE ONLY
Date Received

1 **Name of vendor who has a business relationship with local governmental entity.**

Terracon Consultants, Inc.

2 ☐ **Check this box if you are filing an update to a previously filed questionnaire.** (The law requires that you file an updated completed questionnaire with the appropriate filing authority not later than the 7th business day after the date on which you became aware that the originally filed questionnaire was incomplete or inaccurate.)

3 **Name of local government officer about whom the information is being disclosed.**

N/A

Name of Officer

4 **Describe each employment or other business relationship with the local government officer, or a family member of the officer, as described by Section 176.003(a)(2)(A). Also describe any family relationship with the local government officer. Complete subparts A and B for each employment or business relationship described. Attach additional pages to this Form CIQ as necessary.**

N/A

A. Is the local government officer or a family member of the officer receiving or likely to receive taxable income, other than investment income, from the vendor?

☐ Yes ☐ No

B. Is the vendor receiving or likely to receive taxable income, other than investment income, from or at the direction of the local government officer or a family member of the officer AND the taxable income is not received from the local governmental entity?

☐ Yes ☐ No

5 **Describe each employment or business relationship that the vendor named in Section 1 maintains with a corporation or other business entity with respect to which the local government officer serves as an officer or director, or holds an ownership interest of one percent or more.**

N/A

6 ☐ Check this box if the vendor has given the local government officer or a family member of the officer one or more gifts as described in Section 176.003(a)(2)(B), excluding gifts described in Section 176.003(a-1).

7

Jorge A. Flores, P.G. 7-8-2026

Signature of vendor doing business with the governmental entity — Date

CONFLICT OF INTEREST QUESTIONNAIRE
For vendor doing business with local governmental entity

A complete copy of Chapter 176 of the Local Government Code may be found at http://www.statutes.legis.state.tx.us/Docs/LG/htm/LG.176.htm. For easy reference, below are some of the sections cited on this form.

Local Government Code § 176.001(1-a): "Business relationship" means a connection between two or more parties based on commercial activity of one of the parties. The term does not include a connection based on:

(A) a transaction that is subject to rate or fee regulation by a federal, state, or local governmental entity or an agency of a federal, state, or local governmental entity;

(B) a transaction conducted at a price and subject to terms available to the public; or

(C) a purchase or lease of goods or services from a person that is chartered by a state or federal agency and that is subject to regular examination by, and reporting to, that agency.

Local Government Code § 176.003(a)(2)(A) and (B):

(a) A local government officer shall file a conflicts disclosure statement with respect to a vendor if:

***

(2) the vendor:

(A) has an employment or other business relationship with the local government officer or a family member of the officer that results in the officer or family member receiving taxable income, other than investment income, that exceeds $2,500 during the 12-month period preceding the date that the officer becomes aware that

(i) a contract between the local governmental entity and vendor has been executed; or

(ii) the local governmental entity is considering entering into a contract with the vendor;

(B) has given to the local government officer or a family member of the officer one or more gifts that have an aggregate value of more than $100 in the 12-month period preceding the date the officer becomes aware that:

(i) a contract between the local governmental entity and vendor has been executed; or

(ii) the local governmental entity is considering entering into a contract with the vendor.

Local Government Code § 176.006(a) and (a-1)

(a) A vendor shall file a completed conflict of interest questionnaire if the vendor has a business relationship with a local governmental entity and:

(1) has an employment or other business relationship with a local government officer of that local governmental entity, or a family member of the officer, described by Section 176.003(a)(2)(A);

(2) has given a local government officer of that local governmental entity, or a family member of the officer, one or more gifts with the aggregate value specified by Section 176.003(a)(2)(B), excluding any gift described by Section 176.003(a-1); or

(3) has a family relationship with a local government officer of that local governmental entity.

(a-1) The completed conflict of interest questionnaire must be filed with the appropriate records administrator not later than the seventh business day after the later of:

(1) the date that the vendor:

(A) begins discussions or negotiations to enter into a contract with the local governmental entity; or

(B) submits to the local governmental entity an application, response to a request for proposals or bids, correspondence, or another writing related to a potential contract with the local governmental entity; or

(2) the date the vendor becomes aware:

(A) of an employment or other business relationship with a local government officer, or a family member of the officer, described by Subsection (a);

(B) that the vendor has given one or more gifts described by Subsection (a); or

(C) of a family relationship with a local government officer.

"EXHIBIT E"

INSURANCE

Contractor shall obtain and maintain insurance coverage as agreed in paragraph 8 of the City of Brownsville Contract Agreement and ensure that coverage with the parameters contained herein remains in full force at all times during the contract period as follows:

1. **Workers' Compensation and Employers' Liability Insurance**

   Minimum Limits Consistent with Texas Worker's Compensation Act (Section 401):

   1. $100,000 bodily injury each accident
   2. $500,000 bodily injury by disease policy limit
   3. $100,000 Bodily injury by disease each employee

   Any firm performing work for or on behalf of the City of Brownsville must provide Workers' Compensation insurance.

2. **Commercial General Liability Insurance**

   Covering premises-operations, products-completed operations, independent Contractors and contractual liability, with a combined single limit bodily injury/property damage of $1,000,000. This coverage must include, but not be limited to:

   1. Coverage for the liability assumed by the Contractor under the indemnity provision of the contract.
   2. Coverage for Premises/Operations
   3. Products/Completed Operations
   4. Broad Form Contractual Liability
   5. Independent Contractors

3. **Automobile Liability Insurance**

   Covering all owned, hired and non-owned automobile equipment with the following Limits:

   1. Bodily injury

      $250,000 each person,

      $500,000 each occurrence
   2. Property damage

      $100,000 each occurrence

CERTIFICATE OF LIABILITY INSURANCE

4/1/2027

DATE (MM/DD/YYYY) 3/4/2026

THIS CERTIFICATE IS ISSUED AS A MATTER OF INFORMATION ONLY AND CONFERS NO RIGHTS UPON THE CERTIFICATE HOLDER. THIS CERTIFICATE DOES NOT AFFIRMATIVELY OR NEGATIVELY AMEND, EXTEND OR ALTER THE COVERAGE AFFORDED BY THE POLICIES BELOW. THIS CERTIFICATE OF INSURANCE DOES NOT CONSTITUTE A CONTRACT BETWEEN THE ISSUING INSURER(S), AUTHORIZED REPRESENTATIVE OR PRODUCER, AND THE CERTIFICATE HOLDER.

IMPORTANT: If the certificate holder is an ADDITIONAL INSURED, the policy(ies) must have ADDITIONAL INSURED provisions or be endorsed. If SUBROGATION IS WAIVED, subject to the terms and conditions of the policy, certain policies may require an endorsement. A statement on this certificate does not confer rights to the certificate holder in lieu of such endorsement(s).

PRODUCER Lockton Companies, LLC DBA Lockton Insurance Brokers, LLC in CA CA license #0F15767 444 W. 47th St., Ste. 900 Kansas City MO 64112-1906 (816) 960-9000 kcasu@lockton.com	**CONTACT NAME:** **PHONE (A/C, No, Ext):** **FAX (A/C, No):** **E-MAIL ADDRESS:**
INSURED 1312891 TERRACON CONSULTANTS, INC. 10841 S. RIDGEVIEW ROAD OLATHE KS 66061	**INSURER(S) AFFORDING COVERAGE** — **NAIC #** **INSURER A :** Travelers Property Casualty Company of America — 25674 **INSURER B :** Allied World Assurance Company (U.S.) Inc. — 19489 **INSURER C :** The Travelers Indemnity Company of Connecticut — 25682 **INSURER D :** Lloyds of London **INSURER E :** **INSURER F :**

COVERAGES **CERTIFICATE NUMBER:** 22462015 **REVISION NUMBER:** XXXXXXX

THIS IS TO CERTIFY THAT THE POLICIES OF INSURANCE LISTED BELOW HAVE BEEN ISSUED TO THE INSURED NAMED ABOVE FOR THE POLICY PERIOD INDICATED. NOTWITHSTANDING ANY REQUIREMENT, TERM OR CONDITION OF ANY CONTRACT OR OTHER DOCUMENT WITH RESPECT TO WHICH THIS CERTIFICATE MAY BE ISSUED OR MAY PERTAIN, THE INSURANCE AFFORDED BY THE POLICIES DESCRIBED HEREIN IS SUBJECT TO ALL THE TERMS, EXCLUSIONS AND CONDITIONS OF SUCH POLICIES. LIMITS SHOWN MAY HAVE BEEN REDUCED BY PAID CLAIMS.

INSR LTR	TYPE OF INSURANCE	ADDL INSD	SUBR WVD	POLICY NUMBER	POLICY EFF (MM/DD/YYYY)	POLICY EXP (MM/DD/YYYY)	LIMITS	
A	X **COMMERCIAL GENERAL LIABILITY** [ ] CLAIMS-MADE [X] OCCUR X CONTRACTUAL LIAB X XCU COVERAGE GEN'L AGGREGATE LIMIT APPLIES PER: [ ] POLICY [X] PRO-JECT [ ] LOC [ ] OTHER:	N	Y	TC2J-GLSA–9P529930	4/1/2026	4/1/2027	EACH OCCURRENCE DAMAGE TO RENTED PREMISES (Ea occurrence) MED EXP (Any one person) PERSONAL & ADV INJURY GENERAL AGGREGATE PRODUCTS - COMP/OP AGG 	$ 2,000,000 $ 1,000,000 $ 25,000 $ 2,000,000 $ 4,000,000 $ 4,000,000 $
A	**AUTOMOBILE LIABILITY** X ANY AUTO [ ] OWNED AUTOS ONLY [ ] SCHEDULED AUTOS [ ] HIRED AUTOS ONLY [ ] NON-OWNED AUTOS ONLY	N	N	TC2J-CAP-131J3858	4/1/2026	4/1/2027	COMBINED SINGLE LIMIT (Ea accident) BODILY INJURY (Per person) BODILY INJURY (Per accident) PROPERTY DAMAGE (Per accident) 	$ 3,000,000 $ XXXXXXX $ XXXXXXX $ XXXXXXX $ XXXXXXX
A	X **UMBRELLA LIAB** [X] OCCUR X **EXCESS LIAB** [ ] CLAIMS-MADE [ ] DED [ ] RETENTION $	N	Y	CUP-4W208814	4/1/2026	4/1/2027	EACH OCCURRENCE AGGREGATE 	$ 10,000,000 $ 10,000,000 $ XXXXXXX
A C	**WORKERS COMPENSATION AND EMPLOYERS' LIABILITY** Y / N ANY PROPRIETOR/PARTNER/EXECUTIVE OFFICER/MEMBER EXCLUDED? [N] N / A **(Mandatory in NH)** If yes, describe under DESCRIPTION OF OPERATIONS below		N	UB-1T88663A (AOS) UB-1T885681 (AZ, MA, WI)	4/1/2026 4/1/2026	4/1/2027 4/1/2027	X PER STATUTE [ ] OTH-ER E.L. EACH ACCIDENT E.L. DISEASE - EA EMPLOYEE E.L. DISEASE - POLICY LIMIT	 $ 1,000,000 $ 1,000,000 $ 1,000,000
B	CONTRACTORS POLLUTION LIAB	N	N	0312-6506	4/1/2025	4/1/2027	$10,000,000 EACH OCCURRENCE/AGG	
D	PROFESSIONAL LIAB			B0507BN2600303	4/1/2026	4/1/2027	$1,000,000 EACH CLAIM/AGG	

DESCRIPTION OF OPERATIONS / LOCATIONS / VEHICLES (ACORD 101, Additional Remarks Schedule, may be attached if more space is required)

RE: PROJECT #P90257412 ; PROJECT NAME: LA POSADA PARK. WAIVER OF SUBROGATION APPLIES TO GENERAL LIABILITY AND UMBRELLA/ EXCESS LIABILITY, WHERE ALLOWED BY STATE LAW AND AS REQUIRED BY WRITTEN CONTRACT.

CERTIFICATE HOLDER

22462015
CITY OF BROWNSVILLE.
ATTN: SARAI MADRIGAL
1001 E. ELIZABETH ST.
BROWNSVILLE, TX 78520

CANCELLATION See Attachments

SHOULD ANY OF THE ABOVE DESCRIBED POLICIES BE CANCELLED BEFORE THE EXPIRATION DATE THEREOF, NOTICE WILL BE DELIVERED IN ACCORDANCE WITH THE POLICY PROVISIONS.

AUTHORIZED REPRESENTATIVE

© 1988-2015 ACORD CORPORATION. All rights reserved.

Company Consumer Inquiry for the State of Texas

Displaying 1 - 1 (of 1 matching records) Page 1 of 1

TRAVELERS PROPERTY CASUALTY COMPANY OF AMERICA
1 TOWER SQ
HARTFORD, CT 06183-0001
Domicile State : Connecticut **NAIC ID** : 25674 **Status Date** : 06-28-1974
Active Company Type(s) : Fire and Casualty

Displaying 1 - 1 (of 1 matching records) Page 1 of 1

Revise Inquiry

Copyright © 1998-2026 Sircon Corp. | Get Support | 1500 Abbot Rd Ste.100 | East Lansing, MI 48823

Print

ALLIED WORLD ASSURANCE COMPANY (U.S.) INC.

Domicile State	Delaware
NAIC ID	19489
Status	Active

Mailing Address	199 WATER ST FL 29 NEW YORK, NY 10038-3532

Company Types/Authorized Lines

Company Type	Status	Status Date
Surplus Lines	Eligible	06-01-1993

Revise Inquiry

Copyright © 1998-2026 Sircon Corp. | Get Support | 1500 Abbot Rd Ste.100 | East Lansing, MI 48823

Company Consumer Inquiry for the State of Texas

Displaying 1 - 1 (of 1 matching records) Page 1 of 1

TRAVELERS INDEMNITY COMPANY OF CONNECTICUT, THE
1 TOWER SQ
HARTFORD, CT 06183-0001
Domicile State : Connecticut **NAIC ID** : 25682 **Status Date** : 01-01-1919
Active Company Type(s) : Fire and Casualty

Displaying 1 - 1 (of 1 matching records) Page 1 of 1

Revise Inquiry

Copyright © 1998-2026 Sircon Corp. | Get Support | 1500 Abbot Rd Ste.100 | East Lansing, MI 48823

Displaying 1 - 10 (of 108 matching records) Page 1 of 11

LLOYD'S OF LONDON SYNDICATE #1036
C/O LLOYD'S AMERICA, INC.
280 Park Ave
FL 25
NEW YORK, NY 10017
Domicile State : **NAIC ID** : **Status Date** : 09-01-1995
Active Company Type(s) : Surplus Lines-Syndicate

LLOYD'S OF LONDON SYNDICATE #1084
C/O LLOYD'S AMERICA, INC.
280 Park Ave
FL 25
NEW YORK, NY 10017
Domicile State : **NAIC ID** : **Status Date** : 09-01-1995
Active Company Type(s) : Surplus Lines-Syndicate

LLOYD'S OF LONDON SYNDICATE #1100
LLOYD'S AMERICA INC
280 PARK AVE FL25
NEW YORK, NY 10017
Domicile State : **NAIC ID** : **Status Date** : 01-01-2025
Active Company Type(s) : Surplus Lines-Syndicate

LLOYD'S OF LONDON SYNDICATE #1110
C/O LLOYD'S AMERICA, INC.
280 Park Ave
FL 25
NEW YORK, NY 10017
Domicile State : **NAIC ID** : **Status Date** : 01-01-2010
Active Company Type(s) : Surplus Lines-Syndicate

LLOYD'S OF LONDON SYNDICATE #1176
C/O LLOYD'S AMERICA, INC.
280 Park Ave
FL 25
NEW YORK, NY 10017
Domicile State : **NAIC ID** : **Status Date** : 09-01-1995
Active Company Type(s) : Surplus Lines-Syndicate

LLOYD'S OF LONDON SYNDICATE #1183
C/O LLOYD'S AMERICA, INC.
280 Park Ave
FL 25
NEW YORK, NY 10017
Domicile State : **NAIC ID** : **Status Date** : 09-01-1995
Active Company Type(s) : Surplus Lines-Syndicate

LLOYD'S OF LONDON SYNDICATE #1200
C/O LLOYD'S AMERICA, INC.
280 Park Ave
FL 25
NEW YORK, NY 10017
Domicile State : **NAIC ID** : **Status Date** : 10-01-2002
Active Company Type(s) : Surplus Lines-Syndicate

LLOYD'S OF LONDON SYNDICATE #1218
C/O LLOYD'S AMERICA, INC.
280 Park Ave
FL 25
NEW YORK, NY 10017

Domicile State : **NAIC ID** : **Status Date** : 12-02-1996
Active Company Type(s) : Surplus Lines-Syndicate

LLOYD'S OF LONDON SYNDICATE #1221
C/O LLOYD'S AMERICA, INC.
280 Park Ave
FL 25
NEW YORK, NY 10017
Domicile State : **NAIC ID** : **Status Date** : 09-01-1995
Active Company Type(s) : Surplus Lines-Syndicate

LLOYD'S OF LONDON SYNDICATE #1225
C/O LLOYD'S AMERICA, INC.
280 Park Ave
FL 25
NEW YORK, NY 10017
Domicile State : **NAIC ID** : **Status Date** : 01-01-1999
Active Company Type(s) : Surplus Lines-Syndicate

Displaying 1 - 10 (of 108 matching records) Page 1 of 11

Go To Page: 1 Go

Next

Revise Inquiry

Copyright © 1998-2026 Sircon Corp. | Get Support | 1500 Abbot Rd Ste.100 | East Lansing, MI 48823

Print

AGNELLO, JOSEPH MICHAEL
National Producer Number: 255201
KANSAS CITY, MO 64112-1906

Licenses

License Type	License Number	Original Issue Date	Status	Effective Date	Expiration Date
General Lines Agent	913434	12-13-1999	Active	12-13-1999	01-31-2028

Qualifications (Authorized Lines of Insurance)

Qualification Type	Original Issue Date	Status	Effective Date
Life, Acc., Health & HMO	08-20-2007	Active	08-20-2007
Property and Casualty	12-13-1999	Active	12-13-1999

Affiliations/Appointments

NAIC **Company Name**

12304 Accident Fund General Insurance Company

Appointments

Appointment Type	Status	Active Date	Termination Date
Property and Casualty	Active	12-14-2020	

10166 Accident Fund Insurance Company of America

Appointments

Appointment Type	Status	Active Date	Termination Date
Property and Casualty	Active	12-14-2020	

12305 Accident Fund National Insurance Company

Appointments

Appointment Type	Status	Active Date	Termination Date
Property and Casualty	Active	12-14-2020	

95910 Aetna Dental Inc.

Appointments

Appointment Type	Status	Active Date	Termination Date
Life, Accident, Health and HMO	Active	10-14-2025	

95490 Aetna Health Inc.

Appointments

Appointment Type	Status	Active Date	Termination Date
Life, Accident, Health and HMO	Active	10-14-2025	

72052 Aetna Health Insurance Company

Appointments

Appointment Type	Status	Active Date	Termination Date
Life, Accident, Health and HMO	Active	10-14-2025	

60054 Aetna Life Insurance Company

Appointments

Appointment Type	Status	Active Date	Termination Date
Life, Accident, Health and HMO	Active	10-14-2025	

19402 AIG PROPERTY CASUALTY COMPANY

Appointments

Appointment Type	Status	Active Date	Termination Date
Property and Casualty	Active	08-23-2017	

82406 All Savers Insurance Company

Appointments

Appointment Type	Status	Active Date	Termination Date
Life, Accident, Health and HMO	Active	09-03-2020	

10127 Allied Insurance Company of America

Appointments

Appointment Type	Status	Active Date	Termination Date
Property and Casualty	Active	07-31-2020	

42579 ALLIED PROPERTY AND CASUALTY INSURANCE COMPANY

Appointments

Appointment Type	Status	Active Date	Termination Date
Property and Casualty	Active	07-31-2020	

10212 Allmerica Financial Alliance Insurance Company

Appointments

Appointment Type	Status	Active Date	Termination Date
Property and Casualty	Active	02-23-2021	

41840 Allmerica Financial Benefit Insurance Company

Appointments

Appointment Type	Status	Active Date	Termination Date
Property and Casualty	Active	02-23-2021	

19100 AMCO INSURANCE COMPANY

Appointments

Appointment Type	Status	Active Date	Termination Date
Property and Casualty	Active	07-31-2020	

19720 American Alternative Insurance Corporation

Appointments

Appointment Type	Status	Active Date	Termination Date
Property and Casualty	Active	12-18-2019	

20427 AMERICAN CASUALTY COMPANY OF READING, PENNSYLVANIA

Appointments

Appointment Type	Status	Active Date	Termination Date
Property and Casualty	Active	10-24-2023	

19690 American Economy Insurance Company

Appointments

Appointment Type	Status	Active Date	Termination Date
Property and Casualty	Active	05-01-2020	

23450 American Family Home Insurance Company

Appointments

Appointment Type	Status	Active Date	Termination Date
Property and Casualty	Active	11-20-2020	

24066 American Fire and Casualty Company

Appointments

Appointment Type	Status	Active Date	Termination Date
Property and Casualty	Active	03-10-2025	

26247 American Guarantee and Liability Insurance Company

Appointments

Appointment Type	Status	Active Date	Termination Date
Property and Casualty	Active	07-22-2016	

60534 American Heritage Life Insurance Company

Appointments

Appointment Type	Status	Active Date	Termination Date
Life, Accident, Health and HMO	Active	03-24-2021	

40142 **American Zurich Insurance Company**

Appointments

Appointment Type	Status	Active Date	Termination Date
Property and Casualty	Active	07-22-2016	

42390 **AmGUARD Insurance Company**

Appointments

Appointment Type	Status	Active Date	Termination Date
Property and Casualty	Active	11-03-2023	

30830 **Arch Indemnity Insurance Company**

Appointments

Appointment Type	Status	Active Date	Termination Date
Property and Casualty	Active	07-20-2023	

11150 **Arch Insurance Company**

Appointments

Appointment Type	Status	Active Date	Termination Date
Property and Casualty	Active	02-17-2021	

10946 **Arch Property Casualty Insurance Company**

Appointments

Appointment Type	Status	Active Date	Termination Date
Property and Casualty	Active	07-20-2023	

27154 **Atlantic Specialty Insurance Company**

Appointments

Appointment Type	Status	Active Date	Termination Date
Property and Casualty	Active	03-19-2024	

37273 **AXIS Insurance Company**

Appointments

Appointment Type	Status	Active Date	Termination Date
Property and Casualty	Active	02-03-2017	

38245 **BCS INSURANCE COMPANY**

Appointments

Appointment Type	Status	Active Date	Termination Date
Life, Accident, Health and HMO	Active	03-24-2025	

38911 **BERKLEY NATIONAL INSURANCE COMPANY**

Appointments

Appointment Type	Status	Active Date	Termination Date
Property and Casualty	Inactive	01-04-2017	09-23-2020

29580 **Berkley Regional Insurance Company**

Appointments

Appointment Type	Status	Active Date	Termination Date
Property and Casualty	Inactive	01-04-2017	09-23-2020

25615 **CHARTER OAK FIRE INSURANCE COMPANY, THE**

Appointments

Appointment Type	Status	Active Date	Termination Date
Property and Casualty	Active	08-30-2021	

12777 **Chubb Indemnity Insurance Company**

Appointments

Appointment Type	Status	Active Date	Termination Date
Property and Casualty	Active	03-23-2005	

27774 Chubb Lloyds Insurance Company of Texas

Appointments

Appointment Type	Status	Active Date	Termination Date
Property and Casualty	Active	08-31-2004	

10052 Chubb National Insurance Company

Appointments

Appointment Type	Status	Active Date	Termination Date
Property and Casualty	Active	03-23-2005	

95037 Cigna Dental Health of Texas, Inc.

Appointments

Appointment Type	Status	Active Date	Termination Date
Life, Accident, Health and HMO	Active	12-08-2025	

67369 Cigna Health and Life Insurance Company

Appointments

Appointment Type	Status	Active Date	Termination Date
Life, Accident, Health and HMO	Active	08-24-2017	

28665 Cincinnati Casualty Company, The

Appointments

Appointment Type	Status	Active Date	Termination Date
Property and Casualty	Active	04-02-2025	

23280 Cincinnati Indemnity Company, The

Appointments

Appointment Type	Status	Active Date	Termination Date
Property and Casualty	Active	04-02-2025	

10677 Cincinnati Insurance Company, The

Appointments

Appointment Type	Status	Active Date	Termination Date
Property and Casualty	Active	04-02-2025	

31534 Citizens Insurance Company of America

Appointments

Appointment Type	Status	Active Date	Termination Date
Property and Casualty	Active	02-23-2021	

34347 Colonial American Casualty and Surety Company

Appointments

Appointment Type	Status	Active Date	Termination Date
Property and Casualty	Active	08-09-2019	

29262 Colonial County Mutual Insurance Company

Appointments

Appointment Type	Status	Active Date	Termination Date
Property and Casualty	Active	07-31-2020	

19410 Commerce and Industry Insurance Company

Appointments

Appointment Type	Status	Active Date	Termination Date
Property and Casualty	Active	08-14-2014	

20443 Continental Casualty Company

Appointments

Appointment Type	Status	Active Date	Termination Date
Property and Casualty	Active	12-06-2021	

35289 CONTINENTAL INSURANCE COMPANY, THE

Appointments

Appointment Type	Status	Active Date	Termination Date
Property and Casualty	Active	04-06-2023	

18961 **Crestbrook Insurance Company**

Appointments

Appointment Type	Status	Active Date	Termination Date
Property and Casualty	Active	10-06-2015	

42587 **Depositors Insurance Company**

Appointments

Appointment Type	Status	Active Date	Termination Date
Property and Casualty	Active	07-31-2020	

25186 **EMC Property & Casualty Company**

Appointments

Appointment Type	Status	Active Date	Termination Date
Property and Casualty	Active	10-25-2022	

21407 **EMCASCO INSURANCE COMPANY**

Appointments

Appointment Type	Status	Active Date	Termination Date
Property and Casualty	Active	07-17-2020	

21326 **Empire Fire and Marine Insurance Company**

Appointments

Appointment Type	Status	Active Date	Termination Date
Property and Casualty	Active	08-21-2020	

21458 **Employers Insurance Company of Wausau**

Appointments

Appointment Type	Status	Active Date	Termination Date
Property and Casualty	Active	09-10-2025	

21415 **Employers Mutual Casualty Company**

Appointments

Appointment Type	Status	Active Date	Termination Date
Property and Casualty	Active	07-17-2020	

16044 **Everest Denali Insurance Company**

Appointments

Appointment Type	Status	Active Date	Termination Date
Property and Casualty	Active	12-20-2017	

10120 **Everest National Insurance Company**

Appointments

Appointment Type	Status	Active Date	Termination Date
Property and Casualty	Active	12-20-2017	

16045 **Everest Premier Insurance Company**

Appointments

Appointment Type	Status	Active Date	Termination Date
Property and Casualty	Active	12-20-2017	

35181 **Executive Risk Indemnity Inc.**

Appointments

Appointment Type	Status	Active Date	Termination Date
Property and Casualty	Active	03-23-2005	

41483 **FARMINGTON CASUALTY COMPANY**

Appointments

Appointment Type	Status	Active Date	Termination Date
Property and Casualty	Active	08-30-2021	

20281 **Federal Insurance Company**

Appointments

Appointment Type	Status	Active Date	Termination Date
Life, Accident, Health and HMO	Active	08-06-2008	
Property and Casualty	Active	12-13-1999	

39306 **Fidelity and Deposit Company of Maryland**

Appointments

Appointment Type	Status	Active Date	Termination Date
Property and Casualty	Active	08-09-2019	

71870 **FIDELITY SECURITY LIFE INSURANCE COMPANY**

Appointments

Appointment Type	Status	Active Date	Termination Date
Life, Accident, Health and HMO	Active	06-22-2012	

33588 **First Liberty Insurance Corporation, The**

Appointments

Appointment Type	Status	Active Date	Termination Date
Property and Casualty	Active	09-10-2025	

29254 **Foremost County Mutual Insurance Company**

Appointments

Appointment Type	Status	Active Date	Termination Date
Property and Casualty	Inactive	09-30-2019	05-18-2025

11185 **Foremost Insurance Company Grand Rapids, Michigan**

Appointments

Appointment Type	Status	Active Date	Termination Date
Property and Casualty	Inactive	09-30-2019	05-18-2025

41688 **Foremost Lloyds of Texas**

Appointments

Appointment Type	Status	Active Date	Termination Date
Property and Casualty	Inactive	09-30-2019	05-18-2025

24732 **General Insurance Company of America**

Appointments

Appointment Type	Status	Active Date	Termination Date
Property and Casualty	Active	03-13-2000	

26611 **Glatfelter Insurance Company**

Appointments

Appointment Type	Status	Active Date	Termination Date
Property and Casualty	Inactive	12-16-2019	11-24-2025

38148 **Granada Indemnity Company**

Appointments

Appointment Type	Status	Active Date	Termination Date
Property and Casualty	Active	08-19-2025	

18694 **Great Midwest Insurance Company**

Appointments

Appointment Type	Status	Active Date	Termination Date
Property and Casualty	Active	04-09-2015	

20303 **Great Northern Insurance Company**

Appointments

Appointment Type	Status	Active Date	Termination Date
Property and Casualty	Active	03-23-2005	

64246 **Guardian Life Insurance Company of America, The**

Appointments

Appointment Type	Status	Active Date	Termination Date
Life, Accident, Health and HMO	Active	10-27-2017	

36064 **Hanover American Insurance Company, The**

Appointments

Appointment Type	Status	Active Date	Termination Date
Property and Casualty	Active	02-23-2021	

41602 **Hanover Casualty Company, The**

Appointments

Appointment Type	Status	Active Date	Termination Date
Property and Casualty	Active	02-23-2021	

22292 **Hanover Insurance Company, The**

Appointments

Appointment Type	Status	Active Date	Termination Date
Property and Casualty	Active	02-23-2021	

22357 **HARTFORD ACCIDENT AND INDEMNITY COMPANY**

Appointments

Appointment Type	Status	Active Date	Termination Date
Property and Casualty	Active	04-18-2024	

29424 **HARTFORD CASUALTY INSURANCE COMPANY**

Appointments

Appointment Type	Status	Active Date	Termination Date
Property and Casualty	Active	11-15-2018	

19682 **Hartford Fire Insurance Company**

Appointments

Appointment Type	Status	Active Date	Termination Date
Property and Casualty	Active	09-02-2016	

38288 **Hartford Insurance Company of Illinois**

Appointments

Appointment Type	Status	Active Date	Termination Date
Property and Casualty	Active	04-22-2022	

38261 **Hartford Insurance Company of the Southeast**

Appointments

Appointment Type	Status	Active Date	Termination Date
Property and Casualty	Active	03-12-2025	

70815 **Hartford Life and Accident Insurance Company**

Appointments

Appointment Type	Status	Active Date	Termination Date
Life, Accident, Health and HMO	Active	01-18-2024	

38253 **Hartford Lloyd's Insurance Company**

Appointments

Appointment Type	Status	Active Date	Termination Date
Property and Casualty	Active	10-30-2019	

30104 **HARTFORD UNDERWRITERS INSURANCE COMPANY**

Appointments

Appointment Type	Status	Active Date	Termination Date
Property and Casualty	Active	10-30-2019	

92711 **HCC Life Insurance Company**

Appointments

Appointment Type	Status	Active Date	Termination Date

Life, Accident, Health and HMO	Active	01-31-2024	

41343 **HDI Global Insurance Company**

Appointments

Appointment Type	Status	Active Date	Termination Date
Property and Casualty	Active	12-28-2018	

93440 **HM Life Insurance Company**

Appointments

Appointment Type	Status	Active Date	Termination Date
Life, Accident, Health and HMO	Inactive	09-13-2017	04-03-2020

60052 **Humana Benefit Plan of Illinois, Inc.**

Appointments

Appointment Type	Status	Active Date	Termination Date
Life, Accident, Health and HMO	Inactive	11-12-2020	11-10-2023

95024 **Humana Health Plan of Texas, Inc.**

Appointments

Appointment Type	Status	Active Date	Termination Date
Life, Accident, Health and HMO	Active	11-12-2020	

73288 **Humana Insurance Company**

Appointments

Appointment Type	Status	Active Date	Termination Date
Life, Accident, Health and HMO	Active	11-12-2020	

60219 **Humana Insurance Company of Kentucky**

Appointments

Appointment Type	Status	Active Date	Termination Date
Life, Accident, Health and HMO	Active	11-12-2020	

35408 **Imperium Insurance Company**

Appointments

Appointment Type	Status	Active Date	Termination Date
Property and Casualty	Active	04-09-2015	

26581 **Independence American Insurance Company**

Appointments

Appointment Type	Status	Active Date	Termination Date
Property and Casualty	Active	06-12-2023	

19429 **Insurance Company of the State of Pennsylvania, The**

Appointments

Appointment Type	Status	Active Date	Termination Date
Property and Casualty	Active	04-13-2020	

27847 **Insurance Company of the West**

Appointments

Appointment Type	Status	Active Date	Termination Date
Property and Casualty	Active	11-13-2025	

19544 **Liberty County Mutual Insurance Company**

Appointments

Appointment Type	Status	Active Date	Termination Date
Property and Casualty	Active	03-10-2021	

42404 **Liberty Insurance Corporation**

Appointments

Appointment Type	Status	Active Date	Termination Date
Property and Casualty	Active	09-10-2025	

23035 **Liberty Mutual Fire Insurance Company**

Appointments

Appointment Type	Status	Active Date	Termination Date
Property and Casualty	Active	09-10-2025	

23043 **Liberty Mutual Insurance Company**

Appointments

Appointment Type	Status	Active Date	Termination Date
Property and Casualty	Active	05-25-2022	

65498 **Life Insurance Company of North America**

Appointments

Appointment Type	Status	Active Date	Termination Date
Life, Accident, Health and HMO	Active	03-11-2014	

33600 **LM Insurance Corporation**

Appointments

Appointment Type	Status	Active Date	Termination Date
Property and Casualty	Active	09-10-2025	

52556 **Managed DentalGuard, Inc.**

Appointments

Appointment Type	Status	Active Date	Termination Date
Life, Accident, Health and HMO	Active	10-27-2017	

38970 **Markel Insurance Company**

Appointments

Appointment Type	Status	Active Date	Termination Date
Property and Casualty	Inactive	11-01-2019	01-12-2023

22306 **Massachusetts Bay Insurance Company**

Appointments

Appointment Type	Status	Active Date	Termination Date
Property and Casualty	Active	02-23-2021	

11843 **MEDICAL PROTECTIVE COMPANY, THE**

Appointments

Appointment Type	Status	Active Date	Termination Date
Property and Casualty	Active	01-29-2021	

65978 **Metropolitan Life Insurance Company**

Appointments

Appointment Type	Status	Active Date	Termination Date
Life, Accident, Health and HMO	Active	07-20-2016	

20478 **NATIONAL FIRE INSURANCE COMPANY OF HARTFORD**

Appointments

Appointment Type	Status	Active Date	Termination Date
Property and Casualty	Active	02-05-2025	

95251 **National Pacific Dental, Inc.**

Appointments

Appointment Type	Status	Active Date	Termination Date
Life, Accident, Health and HMO	Active	08-03-2016	

22608 **National Specialty Insurance Company**

Appointments

Appointment Type	Status	Active Date	Termination Date
Property and Casualty	Inactive	04-12-2016	01-13-2020

19445 **NATIONAL UNION FIRE INSURANCE COMPANY OF PITTSBURGH, PA.**

Appointments

Appointment Type	Status	Active Date	Termination Date

Property and Casualty	Active	08-14-2014	

26093 NATIONWIDE AFFINITY INSURANCE COMPANY OF AMERICA

Appointments

Appointment Type	Status	Active Date	Termination Date
Property and Casualty	Active	06-04-2021	

28223 Nationwide Agribusiness Insurance Company

Appointments

Appointment Type	Status	Active Date	Termination Date
Property and Casualty	Active	07-31-2020	

10723 Nationwide Assurance Company

Appointments

Appointment Type	Status	Active Date	Termination Date
Property and Casualty	Active	08-12-2020	

23760 Nationwide General Insurance Company

Appointments

Appointment Type	Status	Active Date	Termination Date
Property and Casualty	Active	07-31-2020	

25453 Nationwide Insurance Company of America

Appointments

Appointment Type	Status	Active Date	Termination Date
Property and Casualty	Active	07-31-2020	

10948 Nationwide Insurance Company of Florida

Appointments

Appointment Type	Status	Active Date	Termination Date
Property and Casualty	Active	06-04-2021	

66869 Nationwide Life Insurance Company

Appointments

Appointment Type	Status	Active Date	Termination Date
Life, Accident, Health and HMO	Active	12-17-2021	

23787 Nationwide Mutual Insurance Company

Appointments

Appointment Type	Status	Active Date	Termination Date
Property and Casualty	Active	08-31-2016	

37877 Nationwide Property and Casualty Insurance Company

Appointments

Appointment Type	Status	Active Date	Termination Date
Property and Casualty	Active	07-31-2020	

23841 New Hampshire Insurance Company

Appointments

Appointment Type	Status	Active Date	Termination Date
Property and Casualty	Active	08-14-2014	

66583 NGL Insurance Company

Appointments

Appointment Type	Status	Active Date	Termination Date
Life, Accident, Health and HMO	Active	07-11-2022	

31470 NORGUARD INSURANCE COMPANY

Appointments

Appointment Type	Status	Active Date	Termination Date
Property and Casualty	Active	11-03-2023	

27740 North Pointe Insurance Company

Appointments

Appointment Type	Status	Active Date	Termination Date
Property and Casualty	Active	09-16-2019	

39608 **Nutmeg Insurance Company**

Appointments

Appointment Type	Status	Active Date	Termination Date
Property and Casualty	Active	06-05-2023	

24074 **Ohio Casualty Insurance Company, The**

Appointments

Appointment Type	Status	Active Date	Termination Date
Property and Casualty	Active	09-26-2018	

24082 **Ohio Security Insurance Company**

Appointments

Appointment Type	Status	Active Date	Termination Date
Property and Casualty	Active	06-04-2021	

24147 **Old Republic Insurance Company**

Appointments

Appointment Type	Status	Active Date	Termination Date
Property and Casualty	Active	07-24-2020	

20346 **Pacific Indemnity Company**

Appointments

Appointment Type	Status	Active Date	Termination Date
Property and Casualty	Active	03-23-2005	

70785 **PACIFICARE LIFE AND HEALTH INSURANCE COMPANY**

Appointments

Appointment Type	Status	Active Date	Termination Date
Life, Accident, Health and HMO	Active	08-03-2016	

11087 **Pan-American Casualty Company**

Appointments

Appointment Type	Status	Active Date	Termination Date
Property and Casualty	Active	02-06-2018	

67539 **Pan-American Life Insurance Company**

Appointments

Appointment Type	Status	Active Date	Termination Date
Life, Accident, Health and HMO	Active	04-04-2016	

25623 **PHOENIX INSURANCE COMPANY, THE**

Appointments

Appointment Type	Status	Active Date	Termination Date
Property and Casualty	Active	08-30-2021	

61271 **Principal Life Insurance Company**

Appointments

Appointment Type	Status	Active Date	Termination Date
Life, Accident, Health and HMO	Active	10-15-2024	

12873 **Privilege Underwriters Reciprocal Exchange**

Appointments

Appointment Type	Status	Active Date	Termination Date
Property and Casualty	Inactive	07-27-2017	03-28-2025

34690 **Property and Casualty Insurance Company of Hartford**

Appointments

Appointment Type	Status	Active Date	Termination Date

Property and Casualty	Active	08-29-2019	

68195 **PROVIDENT LIFE AND ACCIDENT INSURANCE COMPANY**

Appointments

Appointment Type	Status	Active Date	Termination Date
Life, Accident, Health and HMO	Active	10-13-2017	

68241 **Prudential Insurance Company of America, The**

Appointments

Appointment Type	Status	Active Date	Termination Date
Life, Accident, Health and HMO	Active	07-25-2019	

68381 **Reliance Standard Life Insurance Company**

Appointments

Appointment Type	Status	Active Date	Termination Date
Life, Accident, Health and HMO	Active	07-21-2022	

24740 **Safeco Insurance Company of America**

Appointments

Appointment Type	Status	Active Date	Termination Date
Property and Casualty	Active	12-13-1999	

11215 **Safeco Insurance Company of Indiana**

Appointments

Appointment Type	Status	Active Date	Termination Date
Property and Casualty	Active	02-27-2024	

95051 **SafeGuard Health Plans, Inc.**

Appointments

Appointment Type	Status	Active Date	Termination Date
Life, Accident, Health and HMO	Active	09-16-2019	

11000 **SENTINEL INSURANCE COMPANY, LTD.**

Appointments

Appointment Type	Status	Active Date	Termination Date
Property and Casualty	Active	01-07-2019	

19070 **STANDARD FIRE INSURANCE COMPANY, THE**

Appointments

Appointment Type	Status	Active Date	Termination Date
Property and Casualty	Active	08-30-2021	

69019 **Standard Insurance Company**

Appointments

Appointment Type	Status	Active Date	Termination Date
Life, Accident, Health and HMO	Active	08-25-2023	

40045 **StarNet Insurance Company**

Appointments

Appointment Type	Status	Active Date	Termination Date
Property and Casualty	Inactive	01-04-2017	09-23-2020

25127 **State Auto Property & Casualty Insurance Company**

Appointments

Appointment Type	Status	Active Date	Termination Date
Property and Casualty	Active	10-23-2019	

25135 **State Automobile Mutual Insurance Company**

Appointments

Appointment Type	Status	Active Date	Termination Date
Property and Casualty	Active	11-28-2019	

29874 **Swiss Re Corporate Solutions America Insurance Corporation**

Appointments

Appointment Type	Status	Active Date	Termination Date
Life, Accident, Health and HMO	Active	05-17-2021	
Property and Casualty	Active	03-21-2017	

29700 **Swiss Re Corporate Solutions Elite Insurance Corporation**

Appointments

Appointment Type	Status	Active Date	Termination Date
Property and Casualty	Active	03-21-2017	

32778 **Swiss Re Corporate Solutions Premier Insurance Corporation**

Appointments

Appointment Type	Status	Active Date	Termination Date
Property and Casualty	Active	01-06-2022	

86231 **Transamerica Life Insurance Company**

Appointments

Appointment Type	Status	Active Date	Termination Date
Life, Accident, Health and HMO	Active	08-18-2021	

20494 **TRANSPORTATION INSURANCE COMPANY**

Appointments

Appointment Type	Status	Active Date	Termination Date
Property and Casualty	Active	10-24-2023	

19038 **TRAVELERS CASUALTY AND SURETY COMPANY**

Appointments

Appointment Type	Status	Active Date	Termination Date
Property and Casualty	Active	05-01-2023	

31194 **TRAVELERS CASUALTY AND SURETY COMPANY OF AMERICA**

Appointments

Appointment Type	Status	Active Date	Termination Date
Property and Casualty	Active	08-30-2021	

19046 **TRAVELERS CASUALTY INSURANCE COMPANY OF AMERICA**

Appointments

Appointment Type	Status	Active Date	Termination Date
Property and Casualty	Active	08-30-2021	

25666 **TRAVELERS INDEMNITY COMPANY OF AMERICA, THE**

Appointments

Appointment Type	Status	Active Date	Termination Date
Property and Casualty	Active	08-30-2021	

25682 **TRAVELERS INDEMNITY COMPANY OF CONNECTICUT, THE**

Appointments

Appointment Type	Status	Active Date	Termination Date
Property and Casualty	Active	08-30-2021	

25658 **TRAVELERS INDEMNITY COMPANY, THE**

Appointments

Appointment Type	Status	Active Date	Termination Date
Property and Casualty	Active	08-30-2021	

25674 **TRAVELERS PROPERTY CASUALTY COMPANY OF AMERICA**

Appointments

Appointment Type	Status	Active Date	Termination Date
Property and Casualty	Active	08-30-2021	

27120 **TRUMBULL INSURANCE COMPANY**

Appointments

Appointment Type	Status	Active Date	Termination Date
Property and Casualty	Active	01-27-2025	

29459 Twin City Fire Insurance Company

Appointments

Appointment Type	Status	Active Date	Termination Date
Property and Casualty	Active	02-14-2020	

21423 UNION INSURANCE COMPANY OF PROVIDENCE

Appointments

Appointment Type	Status	Active Date	Termination Date
Property and Casualty	Active	07-17-2020	

69868 United of Omaha Life Insurance Company

Appointments

Appointment Type	Status	Active Date	Termination Date
Life, Accident, Health and HMO	Active	04-12-2022	

21113 United States Fire Insurance Company

Appointments

Appointment Type	Status	Active Date	Termination Date
Property and Casualty	Active	02-21-2019	

29157 United Wisconsin Insurance Company

Appointments

Appointment Type	Status	Active Date	Termination Date
Property and Casualty	Active	12-14-2020	

95174 UnitedHealthcare Benefits of Texas, Inc.

Appointments

Appointment Type	Status	Active Date	Termination Date
Life, Accident, Health and HMO	Active	08-03-2016	

79413 UnitedHealthcare Insurance Company

Appointments

Appointment Type	Status	Active Date	Termination Date
Life, Accident, Health and HMO	Active	08-03-2016	

95765 UnitedHealthcare of Texas, Inc.

Appointments

Appointment Type	Status	Active Date	Termination Date
Life, Accident, Health and HMO	Active	08-03-2016	

62235 Unum Life Insurance Company of America

Appointments

Appointment Type	Status	Active Date	Termination Date
Life, Accident, Health and HMO	Active	10-13-2017	

20508 VALLEY FORGE INSURANCE COMPANY

Appointments

Appointment Type	Status	Active Date	Termination Date
Property and Casualty	Active	03-21-2023	

20397 Vigilant Insurance Company

Appointments

Appointment Type	Status	Active Date	Termination Date
Property and Casualty	Active	03-23-2005	

39616 Vision Service Plan Insurance Company

Appointments

Appointment Type	Status	Active Date	Termination Date
Life, Accident, Health and HMO	Active	06-02-2022	

13126 Waypoint Mutual

Appointments

Appointment Type	Status	Active Date	Termination Date
Property and Casualty	Active	06-02-2017	

44393 West American Insurance Company

Appointments

Appointment Type	Status	Active Date	Termination Date
Property and Casualty	Active	03-10-2024	

39845 Westport Insurance Corporation

Appointments

Appointment Type	Status	Active Date	Termination Date
Life, Accident, Health and HMO	Inactive	12-03-2019	06-19-2023

16535 Zurich American Insurance Company

Appointments

Appointment Type	Status	Active Date	Termination Date
Property and Casualty	Active	07-22-2016	

27855 Zurich American Insurance Company of Illinois

Appointments

Appointment Type	Status	Active Date	Termination Date
Property and Casualty	Active	07-22-2016	

Revise Inquiry

Copyright © 1998-2026 Sircon Corp. | Get Support | 1500 Abbot Rd Ste.100 | East Lansing, MI 48823

WC COVERAGE VERIFICATION

1

TERRACON CONSULTANTS INC

TRACK POLICY

Insurance Coverage Provider

STANDARD FIRE INSURANCE COMPANY

Coverage Date

06/22/2026

CLICK HERE FOR CLAIM PROCESSING INFORMATION

23 Employer Location(s)

Filter by name or address

TERRACON CONSULTANTS INC

10400 STATE HIGHWAY 191
MIDLAND, TX, 79707-1497

TERRACON CONSULTANTS INC

11133 INTERSTATE 45 S
CONROE, TX, 77302-5833

TERRACON CONSULTANTS INC

11555 CLAY RD CLAYMOORE PARK DR
HOUSTON, TX, 77043-0000

TERRACON CONSULTANTS INC

13145 KALLAN AVE
TYLER, TX, 75703-6520

TERRACON CONSULTANTS INC

TERRACON CONSULTANTS INC

1506 MID CITIES DR BLDG CCJAGPHARR
PHARR, TX, 78577-2128

1609 S CHESTNUT ST
LUFKIN, TX, 75901-5705

TERRACON CONSULTANTS INC

19930 HIGHWAY 242
CONROE, TX, 77306-9366

TERRACON CONSULTANTS INC

2615 CARTWRIGHT ST
DALLAS, TX, 75212-4307

TERRACON CONSULTANTS INC

3004 IRVING BLVD
DALLAS, TX, 75247-6213

TERRACON CONSULTANTS INC

307 SAM HOUSTON DR STE D
VICTORIA, TX, 77901-4897

TERRACON CONSULTANTS INC

3606 WOW RD
CORPUS CHRISTI, TX, 78413-1919

TERRACON CONSULTANTS INC

4235 FM 78 BLDG 3
MCQUEENEY, TX, 78123-3556

TERRACON CONSULTANTS INC

501 INDUSTRIAL BLVD STE D
NASH, TX, 75569-2658

TERRACON CONSULTANTS INC

5307 INDUSTRIAL OAKS BLVD
AUSTIN, TX, 78735-8821

TERRACON CONSULTANTS INC

551 W LEAGUE CITY PKWY

TERRACON CONSULTANTS INC

5847 50TH ST

TERRACON CONSULTANTS INC

5908 STONE CREEK DR
LEWISVILLE, TX, 75056-2637

TERRACON CONSULTANTS INC

6000 NORTHWEST PKWY STE 100
SAN ANTONIO, TX, 78249-3346

TERRACON CONSULTANTS INC

615 GALE ST
LAREDO, TX, 78041

TERRACON CONSULTANTS INC

6198 IMPERIAL LOOP
COLLEGE STATION, TX, 77845-5765

TERRACON CONSULTANTS INC

7701 SW 81ST AVE STE 340
AMARILLO, TX, 79119-5506

TERRACON CONSULTANTS INC

800 PALOMA DR STE 160
ROUND ROCK, TX, 78665-2404

TERRACON CONSULTANTS INC

8901 JOHN W CARPENTER FWY
DALLAS, TX, 75247-4526

To:	Mayor and City Commission
Through:	Alan Guard, Interim City Manager
From:	
Date:	Tuesday, July 21, 2026
Agenda #:	Consideration and **ACTION** to approve the first one-year renewal of the Independent Contractor Agreement for Architect/Engineering Consulting Services (RFQ PES-63-0523) with Jviation, Inc for the Brownsville South Padre Island International Airport. (Airport Department).

Summary:
This item requests approval to exercise the one-year renewal option under the existing contract for on-call airport engineering consulting services for AIRSIDE. The consultant provides planning, engineering, design, construction administration, and FAA grant support for a variety of airport capital improvement projects, including airfield, terminal, security, drainage, roadway, and runway improvements, as well as ACIP assistance, construction management, and FAA coordination. The renewal is in accordance with the contract's option term and will ensure continuity of professional engineering services for ongoing and future FAA-funded airport projects, such as Runway 18/36 Reconstruction and Airfield Signage Update.

Project Scope and Analysis:
The original contract with Jviation, Inc., a Woolpert Company, was awarded on September 5, 2023, for a term contract for Architect/Engineering Consulting Servicesfor use by the Brownsville South Padre Island International Airport, the primary term expiring September 4, 2026.

The City of Brownsville would like to exercise the option under section 1.ii. Term of Contract: PRIMARY TERM: 3 YEARS, OPTION TERMS: 2 PERIODS OF 1 YEAR EACH.

Funding:

Source:

Amount:

Local Contribution if Applicable:

Recommendation:
The Airport staff recommends exercising the option term for this contract.

Commission Pillar:

Attachments:
1. City of Brownsville JViation Inc. Agreement 08.09.23
2. Jviation First Renewal - Signed

DocuSign Envelope ID: 56BB9692-46EB-4B74-BA5D-E5CCCEBDD459

INDEPENDENT CONTRACTOR AGREEMENT
FOR A TERM CONTRACT FOR ARCHITECT/ENGINEERING COSULTING SERVICES FOR THE ON A PRE-APPROVED VENDOR LIST FOR THE CITY OF BROWNSVILLE: BROWNSVILLE SOUTH PADRE ISLAND INTERNATIONAL AIRPORT
RFQ PES-63-0523

This Agreement shall commence upon the approval of the City Commission and executed by the City of Brownsville's Mayor or designee. This agreement is between THE CITY OF BROWNSVILLE ("CITY") and. JViation Inc. ("CONTRACTOR").

1. **Documents**

(a) The following documents (collectively, "Contract Documents") are hereby incorporated into and made part of this Agreement.

i. Scope of Services to be performed by Contractor and fee structure (Exhibit A)

ii. Term on Contract (Exhibit B)

iii. Required Contract Provisions (Exhibit C)

iv. Certificate of Insurance (Exhibit D)

2. **Scope of Services:** The Contractor shall perform the following services in a professional manner:

(a) Contractor shall perform all those services as necessary and as described in Exhibit A.

(b) Contractor will perform such services related to the Project in accordance with the standard of care ordinarily exercised by members of the same profession working under similar circumstances.

(c) By signing this Agreement, Contractor represents that it has thoroughly reviewed the Contract Documents incorporated into this Agreement by reference and that it accepts the description of the Project and the conditions under which the Project is to be performed and completed.

3. **Independent Contractor; Personnel**

(a) Contractor enters into this Agreement as, and shall continue to be, an independent contractor. All Services shall be performed only by Contractor and Contractor's employees. Under no circumstances shall Contractor , or any of Contractor's employees, look to City as his/her employer, or as a partner, agent or principal. Neither Contractor , nor any of Contractor's employees, shall be entitled to any benefits accorded to City's employees, including without limitation worker's compensation, disability insurance, vacation or sick pay. Contractor shall be responsible for providing, at Contractor's expense, and in Contractor's name, unemployment, disability, worker's compensation and other insurance, as well as any and all licenses and permits usual or necessary for conducting the Services. Contractor shall be responsible for paying all applicable local, state and federal taxes.

(b) Contractor represents and warrants to City that its employees performing work hereunder will have sufficient expertise, training, licensure (if applicable) and experience to accomplish the Services.

(c) Contractor shall not subcontract any portion of the work required by this Agreement, except as provided in the Contract Documents. City may terminate this Agreement, effective immediately, if there is any assignment, or attempted assignment, transfer, or encumbrance, by Contractor of this Agreement or any right or interest herein without City's written consent. In the event Contractor engages any subcontractor in the performance of this Agreement, Contractor shall ensure that all of Contractor's subcontractors perform in accordance with the terms and conditions of this Agreement. Contractor shall be fully

DocuSign Envelope ID: 56BB9692-46EB-4B74-BA5D-E5CCCEBDD459

responsible for all of Contractor's subcontractors' performance, and liable for any of Contractor's subcontractors' non-performance and all of Contractor's subcontractors' acts and omissions.

4. Term of Contract

Contract will commence upon City Commission approval and shall expire three years from date of approval. The City of Brownsville reserves the unilateral right to extend the life of the contract for two (2) periods of one (1) year each thereafter: if mutually acceptable to the contractor and the City of Brownsville.

5. Compensation.

(a) Contractor agrees to provide the services and/or materials as specified in the Contract Documents at the cost specified in Exhibit A. It is acknowledged and agreed by Contractor that this amount is the maximum payable and constitutes a limitation upon City's obligation to compensate Contractor for Contractor's services pursuant and related to this Agreement. This maximum amount, however, does not constitute a limitation of any sort upon Contractor's obligation to perform all items of work required by or which can be reasonably inferred from the Scope of Service.

(b) Contractor may submit invoices for compensation no more often than monthly, but only after the services for which the invoices are submitted have been completed. An original invoice plus one copy are due within fifteen (15) days of the end of the month except the final invoice which must be received no later than sixty (60) days after this Agreement expires. Invoices shall designate the nature of the services performed and/or the goods provided. Notwithstanding any provision of this Agreement to the contrary, City may withhold, in whole or in part, payment to the extent necessary to protect itself from loss on account of inadequate or defective work that has not been remedied or resolved in a manner satisfactory to the City's Contract Administrator or failure to comply with this Agreement. The amount withheld shall not be subject to payment of interest by City. All invoices deemed acceptable shall be paid within 45 days of delivery date or invoice date, whichever is later.

6. Insurance.

(a) The Contractor shall furnish proof of insurance requirements as indicated below. The coverage is to remain in force at all times during the contract period. The following minimum insurance coverage is required. The commercial general liability insurance policy shall name the City of Brownsville, Texas, as an "additional insured." This MUST be written in the description section of the insurance certificate, even if there is a check-off box on the insurance certificate. Any costs for adding the City as "additional insured" shall be at the Contractor's expense.

(b) The City of Brownsville shall be given notice 10 days prior to cancellation or modification of any required insurance. The insurance provided shall be endorsed or amended to comply with this notice requirement. In the event that the insurer is unable to accommodate, it shall be the responsibility of the Contractor to provide the proper notice. Such notification will be in writing by registered mail, return receipt requested and addressed to the Procurement Services Division.

(c) The Contractor's insurance must be provided by an A.M. Best's "A-"rated or better insurance company authorized to issue insurance policies in the State of Texas, subject to approval by the City of Brownsville Department of Safety and Risk Management. Any exclusions or provisions in the insurance maintained by the contractor that excludes coverage for work contemplated in this solicitation shall be deemed unacceptable and shall be considered breach of contract.

i. <u>Workers' Compensation and Employers' Liability Insurance</u>

Minimum Limits Consistent with Texas Worker's Compensation Act (Section 401):

1. $100,000 bodily injury each accident
2. $500,000 bodily injury by disease policy limit
3. $100,000 Bodily injury by disease each employee

Any firm performing work for or on behalf of the City of Brownsville must provide Workers' Compensation insurance.

ii. <u>Commercial General Liability Insurance</u>

DocuSign Envelope ID: 56BB9692-46EB-4B74-BA5D-E5CCCEBDD459

Covering premises-operations, products-completed operations, independent contractors and contractual liability.

Limits: Combined single limit bodily injury/property damage $1,000,000.

This coverage must include, but not limited to:

1. Coverage for the liability assumed by the contractor under the indemnity provision of the contract.
2. Coverage for Premises/Operations
3. Products/Completed Operations
4. Broad Form Contractual Liability
5. Independent Contractors

iii. Professional Liability Insurance

Professional Liability Insurance in the amount $5,000,000 per claim, $5,000,000 aggregate.

iv. Automobile Liability Insurance

Covering all owned, hired and non-owned automobile equipment.

Limits:	Bodily injury	$250,000 each person, $500,000 each occurrence
	Property damage	$100,000 each occurrence

7. Termination.

(a) *Termination for Cause.* The aggrieved party may terminate this Agreement for cause if the party in breach has not corrected the breach within ten (10) days after written notice from the aggrieved party identifying the breach. The City Manager may also terminate this Agreement upon such notice as the City Manager deems appropriate under the circumstances in the event the City Manager determines that termination is necessary to protect the public health or safety. The parties agree that if the City erroneously, improperly or unjustifiably terminates for cause, such termination shall be deemed a termination for convenience, which shall be effective thirty (30) days after such notice of termination for cause is provided.

This Agreement may be terminated for cause for reasons including, but not limited to, Contractor's repeated (whether negligent or intentional) submission for payment of false or incorrect bills or invoices, failure to perform the Work to the City's satisfaction; or failure to continuously perform the work in a manner calculated to meet or accomplish the objectives as set forth in this Agreement.

(b) *Termination for Convenience.* The City reserves the right, in its best interest as determined by the City, to cancel this contract for convenience by giving written notice to the Contractor at least thirty (30) days prior to the effective date of such cancellation. In the event this Agreement is terminated for convenience, Contractor shall be paid for any services performed to the City's satisfaction pursuant to the Agreement through the termination date specified in the written notice of termination. Contractor acknowledges and agrees that he/she/it has received good, valuable and sufficient consideration from City, the receipt and adequacy of which are hereby acknowledged by Contractor , for City's right to terminate this Agreement for convenience.

(c) *Cancellation for Non-appropriated Funds.* The City reserves the right, in its best interest as determined by the City, to cancel this contract for non-appropriated funds or unavailability of funds by giving written notice to the Contractor at least thirty (30) days prior to the effective date of such cancellation. The obligation of the City for payment to a Contractor is limited to the availability of funds appropriated in a current fiscal period, and continuation of the contract into a subsequent fiscal period is subject to appropriation of funds, unless otherwise provided by law.

(d) *Force Majeure.* The City and Contractor will be excused from the performance of their respective obligations under this agreement when and to the extent that their performance is delayed or prevented by any circumstances beyond their control including, fire, flood, explosion, strikes or other labor disputes, act of God or public emergency, war, riot, civil commotion, malicious damage, act or omission of any governmental authority, delay or failure or shortage of any type of transportation, equipment, or service from a public utility needed for their performance, provided that:

DocuSign Envelope ID: 56BB9692-46EB-4B74-BA5D-E5CCCEBDD459

i. The non performing party gives the other party prompt written notice describing the particulars of the Force Majeure including, but not limited to, the nature of the occurrence and its expected duration, and continues to furnish timely reports with respect thereto during the period of the Force Majeure;

ii. The excuse of performance is of no greater scope and of no longer duration than is reasonably necessary when considered in light of the Force Majeure;

iii. No obligations of either party that arose before the Force Majeure causing the excuse of performance are excused as a result of the Force Majeure; and

iv. The non-performing party uses its best efforts to remedy its inability to perform.

v. Notwithstanding the above, performance shall not be excused under this Section for a period in excess of sixty (60) days, provided that in extenuating circumstances, the City may excuse performance for a longer term. Economic hardship of the Contractor will not constitute Force Majeure. The term of the agreement shall be extended by a period equal to that during which either party's performance is suspended under this Section.

8. Materiality and Waiver of Breach.

(a) City and Contractor agree that each requirement, duty, and obligation set forth herein is substantial and important to the formation of this Agreement and that each is, therefore, a material term hereof. City's failure to enforce any provision of this Agreement shall not be deemed a waiver of such provision or modification of this Agreement. A waiver of any breach of a provision of this Agreement shall not be deemed a waiver of any subsequent breach and shall not be construed to be a modification of the terms of this Agreement.

9. Indemnification by Consultant.

CONSULTANT AGREES TO DEFEND, INDEMNIFY AND HOLD THE CITY AND ITS RESPECTIVE OFFICERS, AGENTS AND EMPLOYEES, HARMLESS AGAINST CLAIMS, LAWSUITS, JUDGMENTS, FINES, PENAL TIES, COSTS AND EXPENSES FOR ALL PROPERTY DAMAGE OR OTHER HARM OR VIOLATIONS FOR WHICH RECOVERY OF DAMAGES, FINES, OR PENAL TIES IS SOUGHT, SUFFERED BY ANY PERSON OR PERSONS, ONLY TO THE EXTENT CAUSED BY CONSULTANT'S BREACH OF ANY OF THE TERMS OR PROVISIONS OF THIS CONTRACT, VIOLATIONS OF LAW, OR BY ANY NEGLIGENT, GROSSLY NEGLIGENT, INTENTIONAL, OR STRICT LIABILITY OF THE CONSULTANT, ITS OFFICERS, AGENTS, EMPLOYEES, INVITEES, SUBCONTRACTORS, OR SUB- SUBCONTRACTORS AND THEIR RESPECTIVE OFFICERS, AGENTS, OR REPRESENTATIVES, OR ANY OTHER PERSONS OR ENTITIES FOR WHICH THE CONSULTANT IS LEGALLY RESPONSIBLE IN THE PERFORMANCE OF THIS CONTRACT. THE CONSULTANT'S LIABILITY TO INDEMNIFY THE CITY SHALL BE REDUCED PROPORTIONALLY TO THE EXTENT THAT A NEGLIGENT, UNLAWFUL OR WILLFULLY WRONG ACT OR OMISSION OF THE CONSULTANT CONTRIBUTED TO THE LOSS, COST, DAMAGE, DEATH OR INJURY. THE CITY DOES NOT WAIVE ANY GOVERNMENTAL IMMUNITY OR OTHER DEFENSES AVAILABLE TO IT UNDER TEXAS OR FEDERAL LAW. THE PROVISIONS OF THIS PARAGRAPH ARE SOLELY FOR THE BENEFIT OF THE PARTIES HERETO AND ARE NOT INTENDED TO CREATE OR GRANT ANY RIGHTS, CONTRACTUAL OR OTHERWISE, TO ANY OTHER PERSON OR ENTITY.

10. Miscellaneous Provisions.

(a) *Successors and Assigns.* All of the provisions of this Agreement shall be binding upon and inure to the benefit of the parties hereto and their respective heirs, if any, successors, and assigns.

(b) *Choice of Law.* The laws of the state of Texas shall govern the validity of this Agreement, the construction of its terms and the interpretation of the rights and duties of the parties hereto.

DocuSign Envelope ID: 56BB9692-46EB-4B74-BA5D-E5CCCEBDD459

(c) *No Waiver of Governmental Immunity.* NOTHING IN THIS SECTION SHALL BE CONSTRUED TO WAIVE CITY'S GOVERNMENTAL IMMUNITY FROM LAWSUIT, WHICH IMMUNITY IS EXPRESSLY RETAINED TO THE EXTENT IT IS NOT CLEARLY AND UNAMBIGUOUSLY WAIVED BY STATE LAW.

(d) *Assignment.* Contractor shall not assign any of Contractor's rights under this Agreement, or delegate the performance of any of Contractor's duties hereunder, without the prior written consent of the City.

(e) *Modification or Amendment.* No amendment, change or modification of this Agreement shall be valid unless in writing signed by the parties hereto.

(f) *Venue.* This Agreement and any and all matters arising directly or indirectly herefrom shall be governed by and construed and enforced in accordance with the Laws of the State of Texas, with the Federal and State Courts of Cameron County, Texas having jurisdiction. (b) If at any time there is a dispute between or among the Parties with respect to any matter arising directly or indirectly from this Agreement (an "Agreement Matter"), the Parties agree that, prior to seeking judicial remedy, they will engage in face-to-face negotiations in an attempt to resolve such dispute and shall, upon failing to negotiate a mutually satisfactory resolution, choose a mutually agreeable neutral third party to mediate such dispute. Mediation shall be non-binding and shall be confidential.

Notices. Any and all notices, demands, or other communications required or desired to be given hereunder by any party shall be in writing and shall be validly given or made to another party if personally served, or if deposited in the United States mail, certified or registered, postage prepaid, return receipt requested. If such notice or demand is served personally, notice shall be deemed constructively made at the time of such personal service. If such notice, demand or other communication is given by mail, such notice shall be conclusively deemed given five days after deposit thereof in the United States mail addressed to the party to whom such notice, demand or other communication is to be given as follows:

DocuSign Envelope ID: 56BB9692-46EB-4B74-BA5D-E5CCCEBDD459

If to Contractor: JViation Inc.
900 South Broadway, Suite # 1200-S
Glendale, Colorado, 80246

If to City: City of Brownsville
1001 East Elizabeth St.
Brownsville, TX, 78520

Any party hereto may change its address for purposes of this paragraph by written notice given in the manner provided above.

(g) *Entire Understanding.* This document and any exhibit attached constitute the entire understanding and agreement of the parties, and any and all prior agreements, understandings, and representations are hereby terminated and canceled in their entirety and are of no further force and effect.

(h) *Unenforceability of Provisions.* If any provision of this Agreement, or any portion thereof, is held to be invalid and unenforceable, then the remainder of this Agreement shall nevertheless remain in full force and effect.

IN WITNESS WHEREOF the undersigned have executed this Agreement as of the day and year first written above.

CITY OF BROWNSVILLE

Signature: _____

Print Name: John Cowen Jr.

Title: Mayor

Date: 09/05/2023

CONTRACTOR

Signature: DocuSigned by: Jason Virzi 88C66044F188434...

Print Name: Jason Virzi

Title: Vice President

Date: 8/9/2023

"Approved as to Form and Legality
This 7th day of August 2023
Title First Asst CA
Office of the Brownsville City Attorney"

Exhibit A

SCOPE OF SERVICES:

The selected consultant may be requested to provide professional services on any or all of the following projects. These projects currently appear in the capital improvement program, which is updated periodically.

The agreement sought by this solicitation is for a comprehensive consulting firm in connection with engineering, planning, design and construction of airport development projects. **The successful Proposer must have extensive knowledge in FAA regulations, FAA design criteria, construction management, and pavement design. In addition, the successful Proposer must have experience with the FAA's approval process.** The following services relating to this program, may include, but are not limited to:

Additional projects not identified herein may also require services of the selected consultant.

A. Airport-wide upgrade and integration of security facilities, devices and technologies, and associated modifications to existing facilities to accommodate or enhance security, including terminal area roadway, parking and blast protection improvements,
B. Taxiway improvements;
C. Terminal, cargo and G.A. Ramp expansion and rehabilitation,
D. Drainage improvements ;
E. Terminal improvements ;
F. Extend Runway 13R-31L;
G. Access road improvements and Perimeter Fence Improvements;
H. Assist with the submission of the ACIP;
I. Update ALP;
J. Construction Management and Construction Phase Services for the terminal development project, and additional construction projects;
K. RWY Rehabilitation Projects;
L. Design and Construction of RWY Extension Projects; and
M. Independent Fee Analysis.

SECTION 3. ARCHITECT /ENGINEER SERVICES

The basic services required for any given project are expected to include any or all of the following services by project phase:

A. Preliminary Phase - activities required for defining the scope of a project and establishing preliminary requirements, which include:
   1) Conferring with the sponsor on project requirements, finances, schedules, early phases of the project, and other pertinent matters and meeting with FAA and other concerned agencies and parties on matters affecting the project.
   2) Planning, procuring, and/or preparing necessary surveys, geotechnical engineering investigations, field investigations, and architectural and engineering studies required for preliminary design considerations.
   3) Developing design schematics, sketches, environmental and aesthetic considerations, project recommendations, and preliminary layouts and cost estimates.

B. Design Phase - all activities required to undertake and accomplish a full and complete project design, including:
   1) Conducting and attending meetings and design conferences to obtain information and to coordinate or resolve design matters.
   2) Collecting engineering data and undertaking field investigations; performing geotechnical engineering studies; and architectural, engineering, and special environmental studies.
   3) Preparing necessary engineering reports and recommendations.
   4) Preparing detailed plans, specifications, and cost estimates.
   5) Printing and providing necessary copies of engineering drawings and contract specifications.

C. Bidding/Negotiation Phase - assisting the sponsor in advertising and securing bids, negotiating for services, analyzing bid results including contractor compliance with Disadvantaged Business Enterprise goals, furnishing recommendations on the award of contracts, preparing contract documents.

D. Construction Phase - includes all basic services rendered after the award of a construction contract, including (but not limited to) the following activities:
   1) Providing consultation and advice to the sponsor during all phases of construction.
   2) Representing the sponsor at preconstruction conferences.
   3) Inspecting work in progress periodically and providing appropriate reports to the sponsor.
   4) Reviewing and approving shop and erection drawings submitted by contractors for compliance with design concept.
   5) Reviewing, analyzing, and approving laboratory and mill test reports of materials and equipment.
   6) Preparing and negotiating change orders and supplemental agreements.
   7) Observing or reviewing performance tests required by specifications.
   8) Determining amounts owed to contractors and assisting sponsors in the preparation of payment requests for amounts reimbursable from grant projects, and in determining Disadvantaged Business Enterprise performance/goal achievement.
   9) Making final inspection and submitting a report of the completed project to the sponsor.

E. Special Services - services outside the traditional scope of professional architect / engineer consulting services which may be needed for a given project. Such services might be performed "in-house" or contracted out under a subcontract agreement. These might include, but not be limited to the following:
   1) Soils investigations, including core sampling, laboratory tests, related analyses, and reports.
   2) Detailed mill, shop, and/or laboratory inspections of materials and equipment. Review and approve construction submittals.
   3) Land surveys and topographic maps.

4) Field and/or construction surveys.
5) Photogrammetry surveys.
6) Onsite construction inspection and/or management involving the services of a full- time resident engineer(s), inspector(s), or manager(s) during the construction or installation phase of a project. Provide consultation and advice the airport during all phases of construction
    A. Representing the airport at pre-construction conferences.
    B. Reviewing, analyzing, and approving laboratory and mill test reports of material and equipment.
    C. Preparing and negotiating change orders and supplemental agreements.
    D. Observing or reviewing performance tests required by specifications.
    E. Determining amounts owed to the contractors and assisting the airport in the preparation of payment requests for amounts reimbursable from grant projects.
    F. Make final inspection and submitting a report of the completed project to the airport. Documentation for Grant clos-out.

7) Special environmental studies and analyses.
8) Expert witness testimony in litigation involving specific projects.
9) Project feasibility studies.
10) Public information and community involvement surveys, studies, and activities.
11) Preparation of as-constructed plans.
12) Assisting the sponsor in the preparation of necessary applications for local, State, and Federal grants.
13) Preparation of or updating the airport layout plan, and ALP review of specific project consistency
14) Preparation of property maps.

Rate Table

Title	2023 Standard / Lump Sum Rate	2023 Blended CPFF Rate
Market Director	$ 325.00	$ 100.00
Sales Director	$ 325.00	$ 100.00
Practice Operations Leader	$ 305.00	$ 100.00
Practice Ldr I	$ 305.00	$ 100.00
Prgrm Dir II	$ 300.00	$ 100.00
Prgrm Dir I	$ 260.00	$ 76.00
Consultant II	$ 300.00	$ 100.00
Consultant I	$ 275.00	$ 81.00
Planner Project Mgr IV	$ 280.00	$ 82.00
Planner III	$ 240.00	$ 71.00
Planner II	$ 190.00	$ 56.00
Planner I	$ 155.00	$ 46.00
Engineer Project Mgr IV	$ 275.00	$ 81.00
Engineer Project Mgr III	$ 230.00	$ 68.00
Engineer Project Mgr II	$ 180.00	$ 53.00
Engineer Project Mgr I	$ 170.00	$ 50.00
Engineer III	$ 255.00	$ 75.00
Engineer II	$ 180.00	$ 53.00
Engineer I	$ 160.00	$ 47.00
Eng Designer III	$ 215.00	$ 63.00
Eng Designer II	$ 175.00	$ 51.00
Eng Designer I	$ 145.00	$ 43.00
Engineer in Training II	$ 160.00	$ 47.00
Engineer in Training I	$ 145.00	$ 43.00
Engineering Techn III	$ 145.00	$ 43.00
Engineering Techn II	$ 130.00	$ 38.00
Engineering Techn I	$ 110.00	$ 32.00
Construction Manager IV	$ 230.00	$ 68.00
Construction Manager III	$ 200.00	$ 59.00
Construction Manager II	$ 170.00	$ 50.00
Construction Manager I	$ 145.00	$ 43.00
Arch Project Mgr IV	$ 285.00	$ 84.00
Arch Project Mgr III	$ 230.00	$ 68.00
Arch Project Mgr II	$ 210.00	$ 62.00
Arch Project Mgr I	$ 200.00	$ 59.00
Architect II	$ 200.00	$ 59.00
Architectural Designer II	$ 180.00	$ 53.00
Architectural Designer I	$ 140.00	$ 41.00
Geospatial Project Mgr IV	$ 275.00	$ 81.00
Geospatial Project Mgr III	$ 230.00	$ 68.00
Geospatial Project Mgr II	$ 195.00	$ 57.00
Geospatial Project Mgr I	$ 165.00	$ 49.00
Geospatial Phase Mgr III	$ 155.00	$ 46.00
Geospatial Phase Mgr II	$ 140.00	$ 41.00
Geospatial Phase Mgr I	$ 130.00	$ 38.00
Geospatial Specialist III	$ 140.00	$ 42.00
Geospatial Specialist II	$ 130.00	$ 38.00
Geospatial Specialist I	$ 110.00	$ 32.00
Geospatial Team Leader I	$ 140.00	$ 42.00
Geospatial Technician IV	$ 135.00	$ 40.00
Geospatial Technician III	$ 105.00	$ 32.00
Geospatial Technician II	$ 100.00	$ 30.00
Geospatial Technician I	$ 95.00	$ 28.00

Rate Table		
Title	2023 Standard / Lump Sum Rate	2023 Blended CPFF Rate
Surveyor III (Crew Chief)	$ 180.00	$ 53.00
Surveyor II (Crew Chief)	$ 150.00	$ 44.00
Surveyor I (Crew Chief)	$ 125.00	$ 37.00
Survey Field Tech III	$ 120.00	$ 35.00
Survey Field Tech II	$ 110.00	$ 32.00
Survey Field Tech I	$ 90.00	$ 26.00
Survey Office Tech IV	$ 115.00	$ 34.00
Survey Office Tech III	$ 100.00	$ 30.00
Survey Office Tech II	$ 85.00	$ 25.00
Survey Office Tech I	$ 80.00	$ 24.00
Quality Control Manager	$ 255.00	$ 75.00
Grants Administrator I	$ 125.00	$ 37.00
Sales Coordinator	$ 295.00	$ 87.00
Technical Writer I	$ 125.00	$ 37.00
Graphic Artist I	$ 125.00	$ 37.00
Project Coordinator TL	$ 135.00	$ 40.00
Project Coordinator II	$ 135.00	$ 40.00
Project Coordinator I	$ 115.00	$ 34.00
Billing Analyst Team Lead II	$ 155.00	$ 46.00
Project Billing Analyst II	$ 105.00	$ 31.00
Project Billing Analyst I	$ 105.00	$ 31.00
Intern	$ 90.00	$ 26.00

Expenses	
Lodging	$ 115.00 plus tax
Per Diem	$ 59.00
Vehicle	$ 85.00
Mileage	$ 0.655

Exhibit B

Contract will commence upon City Commission approval and shall expire three years from date of approval. The City of Brownsville reserves the unilateral right to extend the life of the contract for two (2) periods of one (1) year each thereafter: if mutually acceptable to the contractor and the City of Brownsville.

Compliance Requirements

FAA Advisory Circular No. 150/5100-14E Architectural, Engineering, and Planning Consultant Services for Airport Grant Projects dated September 25, 2015. Applicable Federal provisions include, but may not be limited to:

- AC 150/5100-14E - Architectural, Engineering, and Planning Consultant Services for Airport Grant Projects (faa.gov)
- Title VI of the Civil Rights Act of 1964; https://www.justice.gov/crt/fcs/TitleVI-Overview
- Section 520 of the Airport and Airway Improvement Act of 1982;
- eCFR :: 48 CFR Part 31 -- Contract Cost Principles and Procedures (FAR Part 31)
- eCFR :: 49 CFR Part 10 -- Maintenance of and Access to Records Pertaining to Individuals
- eCFR :: 49 CFR Part 20 -- New Restrictions on Lobbying
- eCFR :: 49 CFR Part 26 -- Participation by Disadvantaged Business Enterprises in Department of Transportation Financial Assistance Programs
- 49 CFR 29 - GOVERNMENTWIDE DEBARMENT AND SUSPENSION (NONPROCUREMENT) - Content Details - CFR-2006-title49-vol1-part29 (govinfo.gov); and
- 49 CFR Part 30 – Federal Trade Restriction Clause.

End of Exhibit C

ACORD®

CERTIFICATE OF LIABILITY INSURANCE

DATE(MM/DD/YYYY)
04/27/2023

THIS CERTIFICATE IS ISSUED AS A MATTER OF INFORMATION ONLY AND CONFERS NO RIGHTS UPON THE CERTIFICATE HOLDER. THIS CERTIFICATE DOES NOT AFFIRMATIVELY OR NEGATIVELY AMEND, EXTEND OR ALTER THE COVERAGE AFFORDED BY THE POLICIES BELOW. THIS CERTIFICATE OF INSURANCE DOES NOT CONSTITUTE A CONTRACT BETWEEN THE ISSUING INSURER(S), AUTHORIZED REPRESENTATIVE OR PRODUCER, AND THE CERTIFICATE HOLDER.

IMPORTANT: If the certificate holder is an ADDITIONAL INSURED, the policy(ies) must have ADDITIONAL INSURED provisions or be endorsed. If SUBROGATION IS WAIVED, subject to the terms and conditions of the policy, certain policies may require an endorsement. A statement on this certificate does not confer rights to the certificate holder in lieu of such endorsement(s).

Holder Identifier :

PRODUCER
Aon Risk Services Northeast, Inc.
New York NY Office
One Liberty Plaza
165 Broadway, Suite 3201
New York NY 10006 USA

CONTACT NAME:
PHONE (A/C. No. Ext): (866) 283-7122 **FAX (A/C. No.):** (800) 363-0105
E-MAIL ADDRESS:

INSURER(S) AFFORDING COVERAGE		NAIC #
INSURER A:	The Travelers Indemnity Co of America	25666
INSURER B:	The Charter Oak Fire Insurance Company	25615
INSURER C:	The Phoenix Insurance Company	25623
INSURER D:	Endurance American Specialty Ins Co.	41718
INSURER E:	Underwriters At Lloyds London	15792
INSURER F:		

INSURED
Jviation, a Woolpert Company
720 South Colorado Blvd, Suite 1200-S
Glendale CO 80246 USA

COVERAGES **CERTIFICATE NUMBER:** 570099221474 **REVISION NUMBER:**

THIS IS TO CERTIFY THAT THE POLICIES OF INSURANCE LISTED BELOW HAVE BEEN ISSUED TO THE INSURED NAMED ABOVE FOR THE POLICY PERIOD INDICATED. NOTWITHSTANDING ANY REQUIREMENT, TERM OR CONDITION OF ANY CONTRACT OR OTHER DOCUMENT WITH RESPECT TO WHICH THIS CERTIFICATE MAY BE ISSUED OR MAY PERTAIN, THE INSURANCE AFFORDED BY THE POLICIES DESCRIBED HEREIN IS SUBJECT TO ALL THE TERMS,

Limits shown are as requested

INSR LTR	TYPE OF INSURANCE	ADDL INSD	SUBR WVD	POLICY NUMBER	POLICY EFF (MM/DD/YYYY)	POLICY EXP (MM/DD/YYYY)	LIMITS	
A	X COMMERCIAL GENERAL LIABILITY CLAIMS-MADE / X OCCUR GEN'L AGGREGATE LIMIT APPLIES PER: POLICY / X PRO-JECT / X LOC OTHER:			P6300R561380TIA23	03/01/2023	03/01/2024	EACH OCCURRENCE DAMAGE TO RENTED PREMISES (Ea occurrence) MED EXP (Any one person) PERSONAL & ADV INJURY GENERAL AGGREGATE PRODUCTS - COMP/OP AGG	$1,000,000 $1,000,000 $15,000 $1,000,000 $2,000,000 $2,000,000
C	AUTOMOBILE LIABILITY X ANY AUTO OWNED AUTOS ONLY / SCHEDULED AUTOS HIRED AUTOS ONLY / NON-OWNED AUTOS ONLY			810-2W206561-23-43-G	03/01/2023	03/01/2024	COMBINED SINGLE LIMIT (Ea accident) BODILY INJURY (Per person) BODILY INJURY (Per accident) PROPERTY DAMAGE (Per accident)	$1,000,000
	UMBRELLA LIAB / OCCUR EXCESS LIAB / CLAIMS-MADE DED / RETENTION						EACH OCCURRENCE AGGREGATE	
B	WORKERS COMPENSATION AND EMPLOYERS' LIABILITY ANY PROPRIETOR / PARTNER / EXECUTIVE OFFICER/MEMBER (Mandatory in NH) Y/N: N / N/A If yes, describe under DESCRIPTION OF OPERATIONS below			UB4W7689952343E	03/01/2023	03/01/2024	X PER STATUTE / OTH-ER E.L. EACH ACCIDENT E.L. DISEASE-EA EMPLOYEE E.L. DISEASE-POLICY LIMIT	 $1,000,000 $1,000,000 $1,000,000
E	E&O - Professional Liability Primary			PSDEF2301124 Clms Md - Prof/Pollution SIR applies per policy terms & conditions	03/01/2023	03/01/2024	Per Claim/Aggregate SIR	$5,000,000 $750,000

Certificate No : 570099221474

DESCRIPTION OF OPERATIONS / LOCATIONS / VEHICLES (ACORD 101, Additional Remarks Schedule, may be attached if more space is required)

RE: The Brownsville South Padre Island International Airport. City of Brownsville and the Brownsville South Padre Island International Airport are included as Additional Insured in accordance with the policy provisions of the General Liability and Automobile Liability policies. Should General Liability and Automobile Liability policies be cancelled before the expiration date thereof, the policy provisions of each policy will govern how notice of cancellation may be delivered to certificate holders in accordance with the policy provisions of each policy.

CERTIFICATE HOLDER

City of Brownsville
1001 E. Elizabeth Street, 1st Floor
Suite 101
Brownsville TX 78521 USA

CANCELLATION

SHOULD ANY OF THE ABOVE DESCRIBED POLICIES BE CANCELLED BEFORE THE EXPIRATION DATE THEREOF, NOTICE WILL BE DELIVERED IN ACCORDANCE WITH THE POLICY PROVISIONS.

AUTHORIZED REPRESENTATIVE

Aon Risk Services Northeast, Inc.

©1988-2015 ACORD CORPORATION. All rights reserved

The ACORD name and logo are registered marks of ACORD

Docusign Envelope ID: 2C2B39CF-3646-8CB8-82A4-26099084A219

City of Brownsville
Procurement Department

First Renewal for the Independent Contractor Agreement for Architect/Engineering Consulting Services
RFQ # PES-63-0523

This **FIRST RENEWAL** ("Renewal") to the **Independent Contractor Agreement for Architect/Engineering Consulting Services RFQ PES-63-0523** ("Agreement") by and between the **City of Brownsville** ("City"), a Texas municipal corporation, and **Jviation, Inc.** ("Contractor"), is entered into after approval by City Commission and/or City Manager, and as of the last party to sign this Renewal as dated below (the "Effective Date"). City and Contractor are collectively referred to as the "Parties."

WHEREAS, City has recognized the necessity to renew the abovementioned contract with the Contractor; and

WHEREAS, the City and Contractor now desire to renew the Agreement as stated herein.

NOW, THEREFORE, for good and valuable consideration, the receipt and adequacy of which is acknowledged, the parties hereby agree as follows:

The **first renewal of the contract** will be from **September 5, 2026, through September 4, 2027**.

- Initial contract term and renewals.
  - The initial contract period was from **September 5, 2023, through September 4, 2026**.
  - The first renewal of the contract was from **September 5, 2026, through September 4, 2027**.
  - The second and final renewal option, if exercised by the City, will be from **September 5, 2027, through September 4, 2028**.

These services shall be in accordance with the terms of the Agreement. Either Party may terminate the Agreement with not less than (30) days' written notice.

Except as amended herein, the terms and conditions of the Agreement between City and Contractor shall remain in full force and effect.

IN WITNESS WHEREOF, City and Contractor have executed this Renewal to the Agreement as of the date last written below.

Jviation, Inc.

DocuSigned by:
By: Jason Virgi
88C66044F188434...

Date: 06 July 2026

City of Brownsville, Texas

By: _____

Date: _____

APPROVED AS TO FORM

Alyssa J. Castillon
Assistant City Attorney

To:	Mayor and City Commission
Through:	Alan Guard, Interim City Manager
From:	Roberto Montalvo, Assistant Director Internal Services
Date:	Tuesday, July 21, 2026
Agenda #:	Consideration and **ACTION** to approve a lease of two (2) Ford F-250 Animal Control Units with Enterprise Fleet Management, with monthly lease payments of $1,596.23 for each vehicle, under Contract No. 308-26-ISD-CMA, for a 60-month term for each unit, as budgeted. (Internal Services Department)

Summary:

The Internal Services Department requests approval to lease two Ford F-250 Animal Control Units through Enterprise Fleet Management under the City's Master Agreement and cooperative procurement (Sourcewell). Each vehicle will have a monthly lease payment of $1,596.23 for a 60-month term. The total contract value, including required service charges for lease termination, is not to exceed $192,347.60.

These vehicles will support the Brownsville Animal Regulation and Care Center (BARCC) with daily animal control operations, including responding to service calls and safely transporting animals throughout the City. Procurement is utilizing an approved cooperative agreement in accordance with Texas Local Government Code §271.102.

Project Scope and Analysis:

The Internal Services Department seeks authorization to lease two Ford F-250 Animal Control Units to enhance operational capabilities for the Brownsville Animal Regulation and Care Center (BARCC). These vehicles will support daily field operations, service calls, and the safe and efficient transport of animals throughout the City. The acquisition will be executed under the City's existing Master Agreement using a cooperative procurement contract.

This acquisition is justified under cooperative procurement provisions authorized by Texas Local Government Code §271.102. The City is leveraging competitively solicited pricing available through the Sourcewell cooperative and the City's Master Agreement with Enterprise Fleet Management.

This approach provides cost savings, streamlined procurement, and compliance with state and local

purchasing regulations.

Project Scope

• Lease two (2) Ford F-250 Animal Control Units configured for BARCC operational needs.
• Utilize Enterprise Fleet Management under the cooperative procurement agreement (Sourcewell).
• Establish a 60-month lease term for each vehicle.
• Ensure monthly lease payments of $1,596.23 per vehicle.
• Include required service-charge fees associated with lease termination.
• Maintain compliance with Texas Local Government Code §271.102 for cooperative purchasing.
• Provide BARCC with reliable, modern, and safe vehicles needed for the humane transport and handling of animals.

Contract and Financial Details

• **Vendor:** Enterprise Fleet Management
• **Contract Reference:** 308-26-ISD-CMA (for reference; Master Equity Lease Agreement has no contract number)
• **Monthly Lease Payment:** $1,596.23 per vehicle
• **Contract Term:** 60 months per vehicle
• **Additional Fees:** $400 service-charge fee per vehicle (total $800)
• **Total Contract Value:** Not to exceed $192,347.60

Funding:

Source: 701-9110-876-702

Amount: $192,347.60

Local Contribution if Applicable: N/A

Recommendation:

The Internal Services Department recommends that the City Commission approve the lease of two Ford F-250 Animal Control Units under the City's Master Service Agreement utilizing the cooperative procurement contract with Enterprise Fleet Management, as budgeted. Each vehicle will be leased at a monthly amount of $1,596.23, for a total contract amount not to exceed $192,347.60, which includes all lease payments over the 60-month term and applicable service-charge fees.

This authorization will provide the Brownsville Animal Regulation and Care Center (BARCC) with reliable, properly equipped vehicles essential for daily animal control operations, improving response capabilities and ensuring the safe transport of animals throughout the City. The recommended action ensures compliance with Texas Local Government Code §271.102 through the

use of a competitively awarded cooperative contract, offering cost efficiencies and streamlined procurement.

Commission Pillar:
Infrastructure

Attachments:
1. 308-26-ISD-CMA-Enterprise Fleet Management (legal)

PROCUREMENT ANALYSIS

Date: Monday, July 6, 2026
To: Mr. John Cowen Jr., City Mayor
From: Mr. Alan Guard, Interim City Manager
CC: Mr. Damian Espinoza, Procurement Director
Mr. Juan P. Villareal, Director of Internal Services

Agenda Title:
Agenda Item for the City Commission meeting of Tuesday, July 21, 2026.
"Consideration and Action to Authorize a Lease of two Ford F-250 Animal Control Units with Enterprise Fleet Management for Monthly Lease Payments of $1,596.23 for each vehicle. for Contract No. 308-26-ISD-CMA, for a 60-month term for each (Internal Services Department)."

Executive Summary:

- Department: Internal Services Department
- Exemption Type: Under Master Agreement / Cooperative Procurement Sourcewell
- Contract Number: 308-26-ISD-CMA– For reference, as the master equity lease agreement does not have a contract number
- Vendor: Enterprise Fleet Management
- Monthly Lease Payments for each vehicle: $1,596.23
- Monthly Contract Total: $191,547.60
- Term: 60-month terms for each vehicle
- Additional Fees: $400 Service Charge Due to lease termination for each vehicle equals $800.
- Total Contract Value: $192,347.60

Background:
The Internal Services Department identified the need to lease two Ford F-250 Animal Control Units to support the Brownsville Animal Regulation and Care Center (BARCC) in conducting daily animal control operations, including responding to service calls and the safe transport of animals throughout the City.

Exemption Justification:
Authorized use of contracts competitively solicited and awarded by another governmental entity or cooperative organization in compliance with Texas Local Government Code §271.102.

Under the Master Agreement

Vendor Information:
Enterprise Fleet Management
4201 State Hwy 161, Irving, TX 75038
Point of Contact: Natalie Cerini, Senior Account Fleet Coordinator
Phone/Email: (210) 852-4503 | Natalie.Cerini@efleets.com

Exhibits & Supporting Documents:

- Exhibit A – Enterprise Fleet Management Quotes
- Exhibit B – Master Agreement

Recommendation:
The Procurement Department recommends that the City Commission authorize a contract with D&M Commercial Leasing under the City's Master Service Agreement for an amount not to exceed $192,347.60.

enterprise | FLEET MANAGEMENT

Open-End (Equity) Lease Rate Quote
Exhibit A

Quote No: 10076549

Prepared For: City of Brownsville
Villarreal, J.P.

308-26-ISD-CMA

Date 06/30/2026
AE/AM JCA/MFP

Unit #
Year 2027 **Make** Ford **Model** F-250
Series XL 4x4 SD Crew Cab 8 ft. box 176 in. WB SRW
Vehicle Order Type Ordered **Term** 60 **State** TX **Customer#** 564219

$ 81,040.00		Capitalized Price of Vehicle [1]
$0.00	*	License and Certain Other Charges 0.0000% **State** TX
$ 158.50	*	Initial License Fee
$ 0.00		Registration Fee
$ 520.00		Other: (See Page 2)
$ 0.00		Capitalized Price Reduction
$ 0.00		Gain Applied From Prior Unit
$ 0.00	*	Security Deposit
$0.00		Taxes
$ 81,560.00		Total Capitalized Amount (Delivered Price)
$ 1,223.40		Depreciation Reserve @ 1.5000%
$ 372.83		Monthly Lease Charge (Based on Interest Rate - Subject to a Floor) [2]
$ 1,596.23		**Total Monthly Rental Excluding Additional Services**
		Additional Fleet Management
		Master Policy Enrollment Fees
$ 0.00		Commercial Automobile Liability Enrollment
		Liability Limit $0.00
$ 0.00		Physical Damage Management — Comp/Coll Deductible 0 / 0
$ 0.00		Full Maintenance Program [3] Contract Miles 0 — OverMileage Charge $ 0.0648 Per Mile
		Incl: # Brake Sets (1 set = 1 Axle) 1 — # Tires 0 — Loaner Vehicle Not Included
$ 0.00		**Additional Services SubTotal**
$ 0.00		Tax 0.0000% **State** TX
$ 1,596.23		**Total Monthly Rental Including Additional Services**
$ 8,156.00		Reduced Book Value at 60 Months
$ 400.00		Service Charge Due at Lease Termination

All language and acknowledgments contained in the signed quote apply to all vehicles that are ordered under this signed quote.

Order Information

Driver Name	Animal Control x2
Exterior Color	(0 P) Oxford White
Interior Color	Medium Dark Slate w/HD Vinyl 40/20/40 Split B
Lic. Plate Type	Exempt
GVWR	0

Quote based on estimated annual mileage of 7,500
(Current market and vehicle conditions may also affect value of vehicle)
(Quote is Subject to Customer's Credit Approval)
Notes

Enterprise FM Trust will be the owner of the vehicle covered by this Quote. Enterprise FM Trust (not Enterprise Fleet Management) will be the Lessor of such vehicle under the Master Open - End (Equity) Lease Agreement and shall have all rights and obligations of the Lessor under the Master Open - End (Equity) Lease Agreement with respect to such vehicle.
Lessee must maintain insurance coverage on the vehicle as set forth in Section 11 of the Master Open-End (Equity) Lease Agreement until the vehicle is sold.

ALL TAX AND LICENSE FEES TO BE BILLED TO LESSEE AS THEY OCCUR.
Lessee hereby authorizes this vehicle order, and agrees to lease the vehicle on the terms set forth herein and in the Master Equity Lease Agreement. In the event Lessee fails or refuses to accept delivery of the ordered vehicle, Lessee agrees that Lessor shall have the right to collect damages, including, but not limited to, a $500 disposal fee, interest incurred, and loss of value.

LESSEE City of Brownsville

BY **TITLE** **DATE**

* INDICATES ITEMS TO BE BILLED ON DELIVERY.

[1] Capitalized price of vehicle may be adjusted to reflect final manufacturer's invoice, plus a pre delivery interest charge. Lessee hereby assigns to Lessor any manufacturer rebates and/or manufacturer incentives intended for the Lessee, which rebates and/or incentives have been used by Lessor to reduce the capitalized price of the vehicle.

[2] Monthly lease charge will be adjusted to reflect the interest rate on the delivery date (subject to a floor).

[3] The inclusion herein of references to maintenance fees/services are solely for the administrative convenience of Lessee. Notwithstanding the inclusion of such references in this [Invoice/Schedule/Quote], all such maintenance services are to be performed by Enterprise Fleet Management, Inc., and all such maintenance fees are payable by Lessee solely for the account of Enterprise Fleet Management, Inc., pursuant to that certain separate [Maintenance Agreement] entered into by and between Lessee and Enterprise Fleet Management, Inc.; provided that such maintenance fees are being billed by Enterprise FM Trust, and are payable at the direction of Enterprise FM Trust, solely as an authorized agent for collection on behalf of Enterprise Fleet Management, Inc.

APPROVED AS TO FORM

Alyssa J. Castillon
Assistant City Attorney

Aftermarket Equipment Total

Description	(B)illed or (C)apped	Price
Service/Utility - DIAMOND DELUXE Chassis Mount Animal Control Unit (AME Quote: 14603)	C	$ 30,937.00
Total Aftermarket Equipment Billed		$ 0.00
Total Aftermarket Equipment Capitalized		$ 30,937.00
Aftermarket Equipment Total		$ 30,937.00

Other Totals

Description	(B)illed or (C)apped	Price
Initial Administration Fee	C	$ 170.00
Courtesy Delivery Fee	C	$ 350.00
Total Other Charges Billed		$ 0.00
Total Other Charges Capitalized		$ 520.00
Other Charges Total		$ 520.00

Open-End (Equity) Lease Rate Quote

Quote No: 10076549

VEHICLE INFORMATION:

2027 Ford F-250 XL 4x4 SD Crew Cab 8 ft. box 176 in. WB SRW - US

Series ID: W2B

Pricing Summary:

	INVOICE	MSRP
Base Vehicle	$50,531.00	$53,190.00
Total Options	$1,777.00	$1,950.00
Destination Charge	$2,795.00	$2,795.00
Total Price	**$55,103.00**	**$57,935.00**

SELECTED COLOR:

Exterior: Z1-(0 P) Oxford White

Interior: AS-Medium Dark Slate w/HD Vinyl 40/20/40 Split Bench Seat

SELECTED OPTIONS:

CODE	DESCRIPTION	INVOICE	MSRP
176WB	176" Wheelbase	STD	STD
18B	Platform Running Boards	$405.00	$445.00
425	50-State Emissions System	STD	STD
44F	Transmission: TorqShift-G 10-Speed Automatic	Included	Included
512	Spare Tire, Wheel, Carrier & Jack	$269.00	$295.00
52B	Trailer Brake Controller	$273.00	$300.00
52S	Interior Work Surface	$128.00	$140.00
600A	Order Code 600A	NC	NC
63R	Heavy-Service Package For Pickup Box Delete	$114.00	$125.00
64A	Wheels: 17" Argent Painted Steel	Included	Included
66D	Pickup Box Delete	$-569.00	$-625.00
66DRBD	Rear Bumper Delete	Included	Included
66DSPR	Spare Tire, Wheel, Jack & Tire Carrier Delete	Included	Included
66S	Upfitter Switches (6)	$228.00	$250.00
67D	190 Amp Alternator	Included	Included
67H	Heavy-Service Front Suspension Package	$114.00	$125.00
96D	XL Driver Assist Package	$665.00	$730.00
99N	Engine: 7.3L 2V DEVCT NA PFI V8 Gas	Included	Included
A	HD Vinyl 40/20/40 Split Bench Seat	Included	Included
AHB	Automatic High Beam	Included	Included
AS_03	Medium Dark Slate w/HD Vinyl 40/20/40 Split Bench Seat	NC	NC
AUDLK	Audible Lane Departure Warning	Included	Included
FCP1	Ford Connectivity Package (1-Year Included)	Included	Included
FRTSPG	Heavy-Service Front Springs	Included	Included
NONGV	GVWR: 9,900 lbs	Included	Included
PAINT	Monotone Paint Application	STD	STD
PRE	Pre-Collision Assist	Included	Included
RRSTAB	Rear Stabilizer Bar & Auxiliary Springs	Included	Included
STDRD	Radio: AM/FM Stereo w/MP3 Player	Included	Included
SYNC4	SYNC 4 w/8" Center Display	Included	Included
TBM	Tires: LT245/75Rx17E BSW A/T	$150.00	$165.00
WARANT	Fleet Customer Powertrain Limited Warranty	NC	NC
X37	3.73 Axle Ratio	Included	Included
Z1_01	(0 P) Oxford White	NC	NC

CONFIGURED FEATURES:

Body Exterior Features:

- Number Of Doors 4
- Driver And Passenger Mirror: power remote heated manual folding side-view door mirrors with turn signal indicator
- Convex Driver Mirror: convex driver and passenger mirror
- Mirror Type: manual extendable trailer mirrors
- Running Boards: running boards
- Door Handles: black
- Front And Rear Bumpers: black front and rear bumpers with black rub strip
- Front Tow Hooks: 2 front tow hooks
- Body Material: aluminum body material
- : class V trailering with hitch, brake controller
- Grille: black grille
- Upfitter Switches: upfitter switches

Convenience Features:

- Air Conditioning manual air conditioning
- Air Filter: air filter
- Cruise Control: cruise control with steering wheel controls
- Power Windows: power windows with driver and passenger 1-touch down
- Remote Keyless Entry: yes remote keyless entry
- Illuminated Entry: illuminated entry
- Integrated Key Remote: integrated key/remote
- Auto Locking: auto-locking doors
- Steering Wheel: steering wheel with manual tilting, manual telescoping
- Day-Night Rearview Mirror: day-night rearview mirror
- Emergency SOS: SYNC 4 911 Assist emergency communication system
- Front Cupholder: front and rear cupholders
- Overhead Console: full overhead console with storage
- Glove Box: locking glove box
- Driver Door Bin: driver and passenger door bins
- Rear Door Bins: rear door bins
- Dashboard Storage: dashboard storage
- IP Storage: covered bin instrument-panel storage
- Retained Accessory Power: retained accessory power
- Power Accessory Outlet: 2 12V DC power outlets

Entertainment Features:

- radio AM/FM stereo with seek-scan
- Voice Activated Radio: voice activated radio
- Speed Sensitive Volume: speed-sensitive volume
- Steering Wheel Radio Controls: steering-wheel mounted audio controls
- Speakers: 6 speakers
- Internet Access: 5G Modem - Ford Connectivity Package internet access
- 1st Row LCD: 2 1st row LCD monitor
- Wireless Connectivity: wireless phone connectivity
- Antenna: fixed antenna

Lighting, Visibility and Instrumentation Features:

- Headlamp Type delay-off reflector halogen headlamps
- Auto-Dimming Headlights: Auto High Beam auto high-beam headlights
- Cab Clearance Lights: cargo bed light
- Front Wipers: variable intermittent wipers
- Tinted Windows: light-tinted windows
- Dome Light: dome light with fade
- Front Reading Lights: front and rear reading lights
- Variable IP Lighting: variable instrument panel lighting

Display Type: digital/analog appearance
Tachometer: tachometer
Compass: compass
Exterior Temp: outside-temperature display
Low Tire Pressure Warning: tire specific low-tire-pressure warning
Trip Computer: trip computer
Trip Odometer: trip odometer
Lane Departure Warning: lane departure
Forward Collision Alert: forward collision
Oil Pressure Gauge: oil pressure gauge
Water Temp Gauge: water temp. gauge
Transmission Oil Temp Gauge: transmission oil temp. gauge
Engine Hour Meter: engine hour meter
Clock: digital clock
Systems Monitor: driver information centre
Oil Pressure Warning: oil-pressure warning
Water Temp Warning: water-temp. warning
Battery Warning: battery warning
Lights On Warning: lights-on warning
Key in Ignition Warning: key-in-ignition warning
Low Fuel Warning: low-fuel warning
Door Ajar Warning: door-ajar warning
Brake Fluid Warning: brake-fluid warning

Safety And Security:

ABS four-wheel ABS brakes
Number of ABS Channels: 4 ABS channels
Brake Assistance: brake assist
Brake Type: four-wheel disc brakes
Vented Disc Brakes: front and rear ventilated disc brakes
Daytime Running Lights: daytime running lights
Spare Tire Type: full-size spare tire
Spare Tire Mount: underbody mounted spare tire w/crankdown
Driver Front Impact Airbag: driver and passenger front-impact airbags
Driver Side Airbag: seat-mounted driver and passenger side-impact airbags
Overhead Airbag: Safety Canopy System curtain 1st and 2nd row overhead airbag
Height Adjustable Seatbelts: height adjustable front seatbelts
3Point Rear Centre Seatbelt: 3 point rear centre seatbelt
Side Impact Bars: side-impact bars
Perimeter Under Vehicle Lights: remote activated perimeter/approach lights
Rear Child Safety Locks: rear child safety locks
Ignition Disable: SecuriLock immobilizer
Security System: security system Ford Security Package
Panic Alarm: panic alarm
Tracker System: tracker system
Electronic Stability: AdvanceTrac w/Roll Stability Control electronic stability stability control with anti-rollover
Traction Control: ABS and driveline traction control
Front and Rear Headrests: manual adjustable front head restraints
Rear Headrest Control: 3 rear head restraints

Seats And Trim:

Seating Capacity max. seating capacity of 6
Front Bucket Seats: front split-bench 40-20-40 seats
Number of Driver Seat Adjustments: 4-way driver and passenger seat adjustments
Reclining Driver Seat: manual reclining driver and passenger seats
Driver Lumbar: manual driver and passenger lumbar support
Driver Fore/Aft: manual driver and passenger fore/aft adjustment

Front Centre Armrest Storage: front centre armrest with storage
Rear Seat Type: rear 60-40 split-bench seat
Rear Folding Position: rear seat fold-up cushion
Leather Upholstery: vinyl front and rear seat upholstery
Headliner Material: full cloth headliner
Floor Covering: full vinyl/rubber floor covering
Shift Knob Trim: urethane shift knob
Interior Accents: chrome interior accents

Standard Engine:

Engine 430-hp, 7.3-liter V-8 (regular gas)

Standard Transmission:

Transmission 10-speed automatic w/ OD and PowerShift automatic

enterprise | FLEET MANAGEMENT

Open-End (Equity) Lease Rate Quote

Quote No: 10076550

Prepared For: City of Brownsville
Villarreal, J.P.

Date 06/30/2026
AE/AM JCA/MFP

Unit #
Year 2027 **Make** Ford **Model** F-250
Series XL 4x4 SD Crew Cab 8 ft. box 176 in. WB SRW
Vehicle Order Type Ordered **Term** 60 **State** TX **Customer#** 564219

$ 81,040.00		Capitalized Price of Vehicle [1]
$0.00	*	License and Certain Other Charges 0.0000% **State** TX
$ 158.50	*	Initial License Fee
$ 0.00		Registration Fee
$ 520.00		Other: (See Page 2)
$ 0.00		Capitalized Price Reduction
$ 0.00		Gain Applied From Prior Unit
$ 0.00	*	Security Deposit
$0.00		Taxes
$ 81,560.00		Total Capitalized Amount (Delivered Price)
$ 1,223.40		Depreciation Reserve @ 1.5000%
$ 372.83		Monthly Lease Charge (Based on Interest Rate - Subject to a Floor) [2]
$ 1,596.23		**Total Monthly Rental Excluding Additional Services**
		Additional Fleet Management
		Master Policy Enrollment Fees
$ 0.00		Commercial Automobile Liability Enrollment
		Liability Limit $0.00
$ 0.00		Physical Damage Management — Comp/Coll Deductible 0 / 0
$ 0.00		Full Maintenance Program [3] Contract Miles 0 — OverMileage Charge $ 0.0648 Per Mile
		Incl: # Brake Sets (1 set = 1 Axle) 1 — # Tires 0 — Loaner Vehicle Not Included
$ 0.00		**Additional Services SubTotal**
$ 0.00		Tax 0.0000% **State** TX
$ 1,596.23		**Total Monthly Rental Including Additional Services**
$ 8,156.00		Reduced Book Value at 60 Months
$ 400.00		Service Charge Due at Lease Termination

All language and acknowledgments contained in the signed quote apply to all vehicles that are ordered under this signed quote.

Order Information

Driver Name	Animal Control x2
Exterior Color	Oxford White
Interior Color	Medium Dark Slate w/HD Vinyl 40/20/40 Split B
Lic. Plate Type	Exempt
GVWR	0

Quote based on estimated annual mileage of 7,500
(Current market and vehicle conditions may also affect value of vehicle)
(Quote is Subject to Customer's Credit Approval)
Notes

Enterprise FM Trust will be the owner of the vehicle covered by this Quote. Enterprise FM Trust (not Enterprise Fleet Management) will be the Lessor of such vehicle under the Master Open - End (Equity) Lease Agreement and shall have all rights and obligations of the Lessor under the Master Open - End (Equity) Lease Agreement with respect to such vehicle.
Lessee must maintain insurance coverage on the vehicle as set forth in Section 11 of the Master Open-End (Equity) Lease Agreement until the vehicle is sold.

ALL TAX AND LICENSE FEES TO BE BILLED TO LESSEE AS THEY OCCUR.

Lessee hereby authorizes this vehicle order, and agrees to lease the vehicle on the terms set forth herein and in the Master Equity Lease Agreement. In the event Lessee fails or refuses to accept delivery of the ordered vehicle, Lessee agrees that Lessor shall have the right to collect damages, including, but not limited to, a $500 disposal fee, interest incurred, and loss of value.

LESSEE City of Brownsville

BY **TITLE** **DATE**

* INDICATES ITEMS TO BE BILLED ON DELIVERY.

[1] Capitalized price of vehicle may be adjusted to reflect final manufacturer's invoice, plus a pre delivery interest charge. Lessee hereby assigns to Lessor any manufacturer rebates and/or manufacturer incentives intended for the Lessee, which rebates and/or incentives have been used by Lessor to reduce the capitalized price of the vehicle.

[2] Monthly lease charge will be adjusted to reflect the interest rate on the delivery date (subject to a floor).

[3] The inclusion herein of references to maintenance fees/services are solely for the administrative convenience of Lessee. Notwithstanding the inclusion of such references in this [Invoice/Schedule/Quote], all such maintenance services are to be performed by Enterprise Fleet Management, Inc., and all such maintenance fees are payable by Lessee solely for the account of Enterprise Fleet Management, Inc., pursuant to that certain separate [Maintenance Agreement] entered into by and between Lessee and Enterprise Fleet Management, Inc.; provided that such maintenance fees are being billed by Enterprise FM Trust, and are payable at the direction of Enterprise FM Trust, solely as an authorized agent for collection on behalf of Enterprise Fleet Management, Inc.

APPROVED AS TO FORM
Alyssa J. Castillon
Assistant City Attorney

Aftermarket Equipment Total

Description	(B)illed or (C)apped	Price
Service/Utility - DIAMOND DELUXE Chassis Mount Animal Control Unit (AME Quote: 14603)	C	$ 30,937.00
Total Aftermarket Equipment Billed		$ 0.00
Total Aftermarket Equipment Capitalized		$ 30,937.00
Aftermarket Equipment Total		$ 30,937.00

Other Totals

Description	(B)illed or (C)apped	Price
Initial Administration Fee	C	$ 170.00
Courtesy Delivery Fee	C	$ 350.00
Total Other Charges Billed		$ 0.00
Total Other Charges Capitalized		$ 520.00
Other Charges Total		$ 520.00

Open-End (Equity) Lease Rate Quote

Quote No: 10076550

VEHICLE INFORMATION:

2027 Ford F-250 XL 4x4 SD Crew Cab 8 ft. box 176 in. WB SRW - US

Series ID: W2B

Pricing Summary:

	INVOICE	MSRP
Base Vehicle	$50,531.00	$53,190.00
Total Options	$1,777.00	$1,950.00
Destination Charge	$2,795.00	$2,795.00
Total Price	**$55,103.00**	**$57,935.00**

SELECTED COLOR:

Exterior: Z1-Oxford White

Interior: AS-Medium Dark Slate w/HD Vinyl 40/20/40 Split Bench Seat

SELECTED OPTIONS:

CODE	DESCRIPTION	INVOICE	MSRP
176WB	176" Wheelbase	STD	STD
18B	Platform Running Boards	$405.00	$445.00
425	50-State Emissions System	STD	STD
44F	Transmission: TorqShift-G 10-Speed Automatic	Included	Included
512	Spare Tire, Wheel, Carrier & Jack	$269.00	$295.00
52B	Trailer Brake Controller	$273.00	$300.00
52S	Interior Work Surface	$128.00	$140.00
600A	Order Code 600A	NC	NC
63R	Heavy-Service Package For Pickup Box Delete	$114.00	$125.00
64A	Wheels: 17" Argent Painted Steel	Included	Included
66D	Pickup Box Delete	$-569.00	$-625.00
66DRBD	Rear Bumper Delete	Included	Included
66DSPR	Spare Tire, Wheel, Jack & Tire Carrier Delete	Included	Included
66S	Upfitter Switches (6)	$228.00	$250.00
67D	190 Amp Alternator	Included	Included
67H	Heavy-Service Front Suspension Package	$114.00	$125.00
96D	XL Driver Assist Package	$665.00	$730.00
99N	Engine: 7.3L 2V DEVCT NA PFI V8 Gas	Included	Included
A	HD Vinyl 40/20/40 Split Bench Seat	Included	Included
AHB	Automatic High Beam	Included	Included
AS_03	Medium Dark Slate w/HD Vinyl 40/20/40 Split Bench Seat	NC	NC
AUDLK	Audible Lane Departure Warning	Included	Included
FCP1	Ford Connectivity Package (1-Year Included)	Included	Included
FRTSPG	Heavy-Service Front Springs	Included	Included
NONGV	GVWR: 9,900 lbs	Included	Included
PAINT	Monotone Paint Application	STD	STD
PRE	Pre-Collision Assist	Included	Included
RRSTAB	Rear Stabilizer Bar & Auxiliary Springs	Included	Included
STDRD	Radio: AM/FM Stereo w/MP3 Player	Included	Included
SYNC4	SYNC 4 w/8" Center Display	Included	Included
TBM	Tires: LT245/75Rx17E BSW A/T	$150.00	$165.00
WARANT	Fleet Customer Powertrain Limited Warranty	NC	NC
X37	3.73 Axle Ratio	Included	Included
Z1_01	Oxford White	NC	NC

CONFIGURED FEATURES:

Body Exterior Features:

- Number Of Doors 4
- Driver And Passenger Mirror: power remote heated manual folding side-view door mirrors with turn signal indicator
- Convex Driver Mirror: convex driver and passenger mirror
- Mirror Type: manual extendable trailer mirrors
- Running Boards: running boards
- Door Handles: black
- Front And Rear Bumpers: black front and rear bumpers with black rub strip
- Front Tow Hooks: 2 front tow hooks
- Body Material: aluminum body material
- : class V trailering with hitch, brake controller
- Grille: black grille
- Upfitter Switches: upfitter switches

Convenience Features:

- Air Conditioning manual air conditioning
- Air Filter: air filter
- Cruise Control: cruise control with steering wheel controls
- Power Windows: power windows with driver and passenger 1-touch down
- Remote Keyless Entry: yes remote keyless entry
- Illuminated Entry: illuminated entry
- Integrated Key Remote: integrated key/remote
- Auto Locking: auto-locking doors
- Steering Wheel: steering wheel with manual tilting, manual telescoping
- Day-Night Rearview Mirror: day-night rearview mirror
- Emergency SOS: SYNC 4 911 Assist emergency communication system
- Front Cupholder: front and rear cupholders
- Overhead Console: full overhead console with storage
- Glove Box: locking glove box
- Driver Door Bin: driver and passenger door bins
- Rear Door Bins: rear door bins
- Dashboard Storage: dashboard storage
- IP Storage: covered bin instrument-panel storage
- Retained Accessory Power: retained accessory power
- Power Accessory Outlet: 2 12V DC power outlets

Entertainment Features:

- radio AM/FM stereo with seek-scan
- Voice Activated Radio: voice activated radio
- Speed Sensitive Volume: speed-sensitive volume
- Steering Wheel Radio Controls: steering-wheel mounted audio controls
- Speakers: 6 speakers
- Internet Access: 5G Modem - Ford Connectivity Package internet access
- 1st Row LCD: 2 1st row LCD monitor
- Wireless Connectivity: wireless phone connectivity
- Antenna: fixed antenna

Lighting, Visibility and Instrumentation Features:

- Headlamp Type delay-off reflector halogen headlamps
- Auto-Dimming Headlights: Auto High Beam auto high-beam headlights
- Cab Clearance Lights: cargo bed light
- Front Wipers: variable intermittent wipers
- Tinted Windows: light-tinted windows
- Dome Light: dome light with fade
- Front Reading Lights: front and rear reading lights
- Variable IP Lighting: variable instrument panel lighting

Display Type: digital/analog appearance
Tachometer: tachometer
Compass: compass
Exterior Temp: outside-temperature display
Low Tire Pressure Warning: tire specific low-tire-pressure warning
Trip Computer: trip computer
Trip Odometer: trip odometer
Lane Departure Warning: lane departure
Forward Collision Alert: forward collision
Oil Pressure Gauge: oil pressure gauge
Water Temp Gauge: water temp. gauge
Transmission Oil Temp Gauge: transmission oil temp. gauge
Engine Hour Meter: engine hour meter
Clock: digital clock
Systems Monitor: driver information centre
Oil Pressure Warning: oil-pressure warning
Water Temp Warning: water-temp. warning
Battery Warning: battery warning
Lights On Warning: lights-on warning
Key in Ignition Warning: key-in-ignition warning
Low Fuel Warning: low-fuel warning
Door Ajar Warning: door-ajar warning
Brake Fluid Warning: brake-fluid warning

Safety And Security:

ABS four-wheel ABS brakes
Number of ABS Channels: 4 ABS channels
Brake Assistance: brake assist
Brake Type: four-wheel disc brakes
Vented Disc Brakes: front and rear ventilated disc brakes
Daytime Running Lights: daytime running lights
Spare Tire Type: full-size spare tire
Spare Tire Mount: underbody mounted spare tire w/crankdown
Driver Front Impact Airbag: driver and passenger front-impact airbags
Driver Side Airbag: seat-mounted driver and passenger side-impact airbags
Overhead Airbag: Safety Canopy System curtain 1st and 2nd row overhead airbag
Height Adjustable Seatbelts: height adjustable front seatbelts
3Point Rear Centre Seatbelt: 3 point rear centre seatbelt
Side Impact Bars: side-impact bars
Perimeter Under Vehicle Lights: remote activated perimeter/approach lights
Rear Child Safety Locks: rear child safety locks
Ignition Disable: SecuriLock immobilizer
Security System: security system Ford Security Package
Panic Alarm: panic alarm
Tracker System: tracker system
Electronic Stability: AdvanceTrac w/Roll Stability Control electronic stability stability control with anti-rollover
Traction Control: ABS and driveline traction control
Front and Rear Headrests: manual adjustable front head restraints
Rear Headrest Control: 3 rear head restraints

Seats And Trim:

Seating Capacity max. seating capacity of 6
Front Bucket Seats: front split-bench 40-20-40 seats
Number of Driver Seat Adjustments: 4-way driver and passenger seat adjustments
Reclining Driver Seat: manual reclining driver and passenger seats
Driver Lumbar: manual driver and passenger lumbar support
Driver Fore/Aft: manual driver and passenger fore/aft adjustment

Front Centre Armrest Storage: front centre armrest with storage
Rear Seat Type: rear 60-40 split-bench seat
Rear Folding Position: rear seat fold-up cushion
Leather Upholstery: vinyl front and rear seat upholstery
Headliner Material: full cloth headliner
Floor Covering: full vinyl/rubber floor covering
Shift Knob Trim: urethane shift knob
Interior Accents: chrome interior accents

Standard Engine:

Engine 430-hp, 7.3-liter V-8 (regular gas)

Standard Transmission:

Transmission 10-speed automatic w/ OD and PowerShift automatic

End of Exhibit A

Exhibit B

enterprise
FLEET MANAGEMENT

MASTER EQUITY LEASE AGREEMENT

This Master Equity Lease Agreement is entered into this 12 day of November 2019 by and between Enterprise FM Trust, a Delaware statutory trust ("Lessor"), and the lessee whose name and address is set forth on the signature page below ("Lessee").

1. LEASE OF VEHICLES: Lessor hereby leases to Lessee and Lessee hereby leases from Lessor the vehicles (individually, a "Vehicle" and collectively, the "Vehicles") described in the schedules from time to time delivered by Lessor to Lessee as set forth below ("Schedule(s)") for the rentals and on the terms set forth in this Agreement and in the applicable Schedule. References to this "Agreement" shall include this Master Equity Lease Agreement and the various Schedules and addenda to this Master Equity Lease Agreement. Lessor will, on or about the date of delivery of each Vehicle to Lessee, send Lessee a Schedule covering the Vehicle, which will include, among other things, a description of the Vehicle, the lease term and the monthly rental and other payments due with respect to the Vehicle. The terms contained in each such Schedule will be binding on Lessee unless Lessee objects in writing to such Schedule within ten (10) days after the date of delivery of the Vehicle covered by such Schedule. Lessor is the sole legal owner of each Vehicle. This Agreement is a lease only and Lessee will have no right, title or interest in or to the Vehicles except for the use of the Vehicles as described in this Agreement. This Agreement shall be treated as a true lease for federal and applicable state income tax purposes with Lessor having all benefits of ownership of the Vehicles. It is understood and agreed that Enterprise Fleet Management, Inc. or an affiliate thereof (together with any subservicer, agent, successor or assign as servicer on behalf of Lessor, "Servicer") may administer this Agreement on behalf of Lessor and may perform the service functions herein provided to be performed by Lessor.

2. TERM: The term of this Agreement ("Term") for each Vehicle begins on the date such Vehicle is delivered to Lessee (the "Delivery Date") and, unless terminated earlier in accordance with the terms of this Agreement, continues for the "Lease Term" as described in the applicable Schedule.

3. RENT AND OTHER CHARGES:

(a) Lessee agrees to pay Lessor monthly rental and other payments according to the Schedules and this Agreement. The monthly payments will be in the amount listed as the "Total Monthly Rental Including Additional Services" on the applicable Schedule (with any portion of such amount identified as a charge for maintenance services under Section 4 of the applicable Schedule being payable to Lessor as agent for Enterprise Fleet Management, Inc.) and will be due and payable in advance on the first day of each month. If a Vehicle is delivered to Lessee on any day other than the first day of a month, monthly rental payments will begin on the first day of the next month. In addition to the monthly rental payments, Lessee agrees to pay Lessor a pro-rated rental charge for the number of days that the Delivery Date precedes the first monthly rental payment date. A portion of each monthly rental payment, being the amount designated as "Depreciation Reserve" on the applicable Schedule, will be considered as a reserve for depreciation and will be credited against the Delivered Price of the Vehicle for purposes of computing the Book Value of the Vehicle under Section 3(c). Lessee agrees to pay Lessor the "Total Initial Charges" set forth in each Schedule on the due date of the first monthly rental payment under such Schedule. Lessee agrees to pay Lessor the "Service Charge Due at Lease Termination" set forth in each Schedule at the end of the applicable Term (whether by reason of expiration, early termination or otherwise).

(b) In the event the Term for any Vehicle ends prior to the last day of the scheduled Term, whether as a result of a default by Lessee, a Casualty Occurrence or any other reason, the rentals and management fees paid by Lessee will be recalculated in accordance with the rule of 78's and the adjusted amount will be payable by Lessee to Lessor on the termination date.

(c) Lessee agrees to pay Lessor within thirty (30) days after the end of the Term for each Vehicle, additional rent equal to the excess, if any, of the Book Value of such Vehicle over the greater of (i) the wholesale value of such Vehicle as determined by Lessor in good faith or (ii) except as provided below, twenty percent (20%) of the Delivered Price of such Vehicle as set forth in the applicable Schedule. If the Book Value of such Vehicle is less than the greater of (i) the wholesale value of such Vehicle as determined by Lessor in good faith or (ii) except as provided below, twenty percent (20%) of the Delivered Price of such Vehicle as set forth in the applicable Schedule, Lessor agrees to pay such deficiency to Lessee as a terminal rental adjustment within thirty (30) days after the end of the applicable Term. Notwithstanding the foregoing, if (i) the Term for a Vehicle is greater than forty-eight (48) months (including any extension of the Term for such Vehicle), (ii) the mileage on a Vehicle at the end of the Term is greater than 15,000 miles per year on average (prorated on a daily basis) (i.e., if the mileage on a Vehicle with a Term of thirty-six (36) months is greater than 45,000 miles) or (iii) in the sole judgment of Lessor, a Vehicle has been subject to damage or any abnormal or excessive wear and tear, the calculations described in the two immediately preceding sentences shall be made without giving effect to clause (ii) in each such sentence. The "Book Value" of a Vehicle means the sum of (i) the "Delivered Price" of the Vehicle as set forth in the applicable Schedule minus (ii) the total Depreciation Reserve paid by Lessee to Lessor with respect to such Vehicle plus (iii) all accrued and unpaid rent and/or other amounts owed by Lessee with respect to such Vehicle.

(d) Any security deposit of Lessee will be returned to Lessee at the end of the applicable Term, except that the deposit will first be applied to any losses and/or damages suffered by Lessor as a result of Lessee's breach of or default under this Agreement and/or to any other amounts then owed by Lessee to Lessor.

(e) Any rental payment or other amount owed by Lessee to Lessor which is not paid within twenty (20) days after its due date will accrue interest, payable on demand of Lessor, from the date due until paid in full at a rate per annum equal to the lesser of (i) Eighteen Percent (18%) per annum or (ii) the highest rate permitted by applicable law (the "Default Rate").

(f) If Lessee fails to pay any amount due under this Agreement or to comply with any of the covenants contained in this Agreement, Lessor, Servicer or any other agent of Lessor may, at its option, pay such amounts or perform such covenants and all sums paid or incurred by Lessor in connection therewith will be repayable by Lessee to Lessor upon demand together with interest thereon at the Default Rate.

Initials: EFM _____ Customer _____

Document Ref: 8MCWH-DTGWW-DYXXM-YVOHP

(g) Lessee's obligations to make all payments of rent and other amounts under this Agreement are absolute and unconditional and such payments shall be made in immediately available funds without setoff, counterclaim or deduction of any kind. Lessee acknowledges and agrees that neither any Casualty Occurrence to any Vehicle nor any defect, unfitness or lack of governmental approval in, of, or with respect to, any Vehicle regardless of the cause or consequence nor any breach by Enterprise Fleet Management, Inc. of any maintenance agreement between Enterprise Fleet Management, Inc. and Lessee covering any Vehicle regardless of the cause or consequence will relieve Lessee from the performance of any of its obligations under this Agreement, including, without limitation, the payment of rent and other amounts under this Agreement.

4. USE AND SURRENDER OF VEHICLES: Lessee agrees to allow only duly authorized, licensed and insured drivers to use and operate the Vehicles. Lessee agrees to comply with, and cause its drivers to comply with, all laws, statutes, rules, regulations and ordinances and the provisions of all insurance policies affecting or covering the Vehicles or their use or operation. Lessee agrees to keep the Vehicles free of all liens, charges and encumbrances. Lessee agrees that in no event will any Vehicle be used or operated for transporting hazardous substances or persons for hire, for any illegal purpose or to pull trailers that exceed the manufacturer's trailer towing recommendations. Lessee agrees that no Vehicle is intended to be or will be utilized as a "school bus" as defined in the Code of Federal Regulations or any applicable state or municipal statute or regulation. Lessee agrees not to remove any Vehicle from the continental United States without first obtaining Lessor's written consent. At the expiration or earlier termination of this Agreement with respect to each Vehicle, or upon demand by Lessor made pursuant to Section 14, Lessee at its risk and expense agrees to return such Vehicle to Lessor at such place and by such reasonable means as may be designated by Lessor. If for any reason Lessee fails to return any Vehicle to Lessor as and when required in accordance with this Section, Lessee agrees to pay Lessor additional rent for such Vehicle at twice the normal pro-rated daily rent. Acceptance of such additional rent by Lessor will in no way limit Lessor's remedies with respect to Lessee's failure to return any Vehicle as required hereunder.

5. COSTS, EXPENSES, FEES AND CHARGES: Lessee agrees to pay all costs, expenses, fees, charges, fines, tickets, penalties and taxes (other than federal and state income taxes on the income of Lessor) incurred in connection with the titling, registration, delivery, purchase, sale, rental, use or operation of the Vehicles during the Term. If Lessor, Servicer or any other agent of Lessor incurs any such costs or expenses, Lessee agrees to promptly reimburse Lessor for the same.

6. LICENSE AND CHARGES: Each Vehicle will be titled and licensed in the name designated by Lessor at Lessee's expense. Certain other charges relating to the acquisition of each Vehicle and paid or satisfied by Lessor have been capitalized in determining the monthly rental, treated as an initial charge or otherwise charged to Lessee. Such charges have been determined without reduction for trade-in, exchange allowance or other credit attributable to any Lessor-owned vehicle.

7. REGISTRATION PLATES, ETC.: Lessee agrees, at its expense, to obtain in the name designated by Lessor all registration plates and other plates, permits, inspections and/or licenses required in connection with the Vehicles, except for the initial registration plates which Lessor will obtain at Lessee's expense. The parties agree to cooperate and to furnish any and all information or documentation, which may be reasonably necessary for compliance with the provisions of this Section or any federal, state or local law, rule, regulation or ordinance. Lessee agrees that it will not permit any Vehicle to be located in a state other than the state in which such Vehicle is then titled for any continuous period of time that would require such Vehicle to become subject to the titling and/or registration laws of such other state.

8. MAINTENANCE OF AND IMPROVEMENTS TO VEHICLES:

(a) Lessee agrees, at its expense, to (i) maintain the Vehicles in good condition, repair, maintenance and running order and in accordance with all manufacturer's instructions and warranty requirements and all legal requirements and (ii) furnish all labor, materials, parts and other essentials required for the proper operation and maintenance of the Vehicles. Any alterations, additions, replacement parts or improvements to a Vehicle will become and remain the property of Lessor and will be returned with such Vehicle upon such Vehicle's return pursuant to Section 4. Notwithstanding the foregoing, so long as no Event of Default has occurred and is continuing, Lessee shall have the right to remove any additional equipment installed by Lessee on a Vehicle prior to returning such Vehicle to Lessor under Section 4. The value of such alterations, additions, replacement parts and improvements will in no instance be regarded as rent. Without the prior written consent of Lessor, Lessee will not make any alterations, additions, replacement parts or improvements to any Vehicle which detract from its economic value or functional utility. Lessor will not be required to make any repairs or replacements of any nature or description with respect to any Vehicle, to maintain or repair any Vehicle or to make any expenditure whatsoever in connection with any Vehicle or this Agreement.

(b) Lessor and Lessee acknowledge and agree that if Section 4 of a Schedule includes a charge for maintenance, (i) the Vehicle(s) covered by such Schedule are subject to a separate maintenance agreement between Enterprise Fleet Management, Inc. and Lessee and (ii) Lessor shall have no liability or responsibility for any failure of Enterprise Fleet Management, Inc. to perform any of its obligations thereunder or to pay or reimburse Lessee for its payment of any costs and expenses incurred in connection with the maintenance or repair of any such Vehicle(s).

9. SELECTION OF VEHICLES AND DISCLAIMER OF WARRANTIES:

(a) LESSEE ACCEPTANCE OF DELIVERY AND USE OF EACH VEHICLE WILL CONCLUSIVELY ESTABLISH THAT SUCH VEHICLE IS OF A SIZE, DESIGN, CAPACITY, TYPE AND MANUFACTURE SELECTED BY LESSEE AND THAT SUCH VEHICLE IS IN GOOD CONDITION AND REPAIR AND IS SATISFACTORY IN ALL RESPECTS AND IS SUITABLE FOR LESSEE'S PURPOSE. LESSEE ACKNOWLEDGES THAT LESSOR IS NOT A MANUFACTURER OF ANY VEHICLE OR AN AGENT OF A MANUFACTURER OF ANY VEHICLE.

(b) LESSOR MAKES NO REPRESENTATION OR WARRANTY OF ANY KIND, EXPRESS OR IMPLIED, WITH RESPECT TO ANY VEHICLE, INCLUDING, WITHOUT LIMITATION, ANY REPRESENTATION OR WARRANTY AS TO CONDITION, MERCHANTABILITY OR FITNESS FOR ANY PARTICULAR PURPOSE, IT BEING AGREED THAT ALL SUCH RISKS ARE TO BE BORNE BY LESSEE. THE VEHICLES ARE LEASED "AS IS," "WITH ALL FAULTS." All warranties made by any supplier, vendor and/or manufacturer of a Vehicle are hereby assigned by Lessor to Lessee for the applicable Term and Lessee's only remedy, if any, is against the supplier, vendor or manufacturer of the Vehicle.

Initials: EFM_____ Customer_____

Document Ref: 8MCWH-DTGWW-DYXXM-YVOHP

(c) None of Lessor, Servicer or any other agent of Lessor will be liable to Lessee for any liability, claim, loss, damage (direct, incidental or consequential) or expense of any kind or nature, caused directly or indirectly, by any Vehicle or any inadequacy of any Vehicle for any purpose or any defect (latent or patent) in any Vehicle or the use or maintenance of any Vehicle or any repair, servicing or adjustment of or to any Vehicle, or any delay in providing or failure to provide any Vehicle, or any interruption or loss of service or use of any Vehicle, or any loss of business or any damage whatsoever and however caused. In addition, none of Lessor, Servicer or any other agent of Lessor will have any liability to Lessee under this Agreement or under any order authorization form executed by Lessee if Lessor is unable to locate or purchase a Vehicle ordered by Lessee or for any delay in delivery of any Vehicle ordered by Lessee.

10. RISK OF LOSS: Lessee assumes and agrees to bear the entire risk of loss of, theft of, damage to or destruction of any Vehicle from any cause whatsoever ("Casualty Occurrence"). In the event of a Casualty Occurrence to a Vehicle, Lessee shall give Lessor prompt notice of the Casualty Occurrence and thereafter will place the applicable Vehicle in good repair, condition and working order; provided, however, that if the applicable Vehicle is determined by Lessor to be lost, stolen, destroyed or damaged beyond repair (a "Totaled Vehicle"), Lessee agrees to pay Lessor no later than the date thirty (30) days after the date of the Casualty Occurrence the amounts owed under Sections 3(b) and 3(c) with respect to such Totaled Vehicle. Upon such payment, this Agreement will terminate with respect to such Totaled Vehicle.

11. INSURANCE:

(a) Lessee agrees to purchase and maintain in force during the Term, insurance policies in at least the amounts listed below covering each Vehicle, to be written by an insurance company or companies satisfactory to Lessor, insuring Lessee, Lessor and any other person or entity designated by Lessor against any damage, claim, suit, action or liability:

(i) Commercial Automobile Liability Insurance (including Uninsured/Underinsured Motorist Coverage and No-Fault Protection where required by law) for the limits listed below (Note - $2,000,000 Combined Single Limit Bodily Injury and Property Damage with No Deductible is required for each Vehicle capable of transporting more than 8 passengers):

State of Vehicle Registration	Coverage
Connecticut, Massachusetts, Maine, New Hampshire, New Jersey, New York, Pennsylvania, Rhode Island, and Vermont	$1,000,000 Combined Single Limit Bodily Injury and Property Damage - No Deductible
Florida	$500,000 Combined Single Limit Bodily Injury and Property Damage or $100,000 Bodily Injury Per Person, $300,000 Per Occurrence and $50,000 Property Damage (100/300/50) - No Deductible
All Other States	$300,000 Combined Single Limit Bodily Injury and Property Damage or $100,000 Bodily Injury Per Person, $300,000 Per Occurrence and $50,000 Property Damage (100/300/50) - No Deductible

(ii) Physical Damage Insurance (Collision & Comprehensive): Actual cash value of the applicable Vehicle. Maximum deductible of $500 per occurrence - Collision and $250 per occurrence - Comprehensive).

If the requirements of any governmental or regulatory agency exceed the minimums stated in this Agreement, Lessee must obtain and maintain the higher insurance requirements. Lessee agrees that each required policy of insurance will by appropriate endorsement or otherwise name Lessor and any other person or entity designated by Lessor as additional insureds and loss payees, as their respective interests may appear. Further, each such insurance policy must provide the following: (i) that the same may not be cancelled, changed or modified until after the insurer has given to Lessor, Servicer and any other person or entity designated by Lessor at least thirty (30) days prior written notice of such proposed cancellation, change or modification, (ii) that no act or default of Lessee or any other person or entity shall affect the right of Lessor, Servicer, any other agent of Lessor or any of their respective successors or assigns to recover under such policy or policies of insurance in the event of any loss of or damage to any Vehicle and (iii) that the coverage is "primary coverage" for the protection of Lessee, Lessor, Servicer, any other agent of Lessor and their respective successors and assigns notwithstanding any other coverage carried by Lessee, Lessor, Servicer, any other agent of Lessor or any of their respective successors or assigns protecting against similar risks. Original certificates evidencing such coverage and naming Lessor, Servicer, any other agent of Lessor and any other person or entity designated by Lessor as additional insureds and loss payees shall be furnished to Lessor prior to the Delivery Date, and annually thereafter and/or as reasonably requested by Lessor from time to time. In the event of default, Lessee hereby appoints Lessor, Servicer and any other agent of Lessor as Lessee's attorney-in-fact to receive payment of, to endorse all checks and other documents and to take any other actions necessary to pursue insurance claims and recover payments if Lessee fails to do so. Any expense of Lessor, Servicer or any other agent of Lessor in adjusting or collecting insurance shall be borne by Lessee.

Lessee, its drivers, servants and agents agree to cooperate fully with Lessor, Servicer, any other agent of Lessor and any insurance carriers in the investigation, defense and prosecution of all claims or suits arising from the use or operation of any Vehicle. If any claim is made or action commenced for death, personal injury or property damage resulting from the ownership, maintenance, use or operation of any Vehicle, Lessee will promptly notify Lessor of such action or claim and forward to Lessor a copy of every demand, notice, summons or other process received in connection with such claim or action.

(b) Notwithstanding the provisions of Section 11(a) above: (i) if Section 4 of a Schedule includes a charge for physical damage waiver, Lessor agrees that (A) Lessee will not be required to obtain or maintain the minimum physical damage insurance (collision and comprehensive) required under Section 11(a) for the Vehicle(s) covered by such Schedule and (B) Lessor will assume the risk of physical damage (collision and comprehensive) to the Vehicle(s) covered by such Schedule; provided, however, that such physical damage waiver shall not apply to, and Lessee shall be and remain liable and responsible for, damage to a covered Vehicle caused by wear and tear or mechanical breakdown or failure, damage to or loss of any parts, accessories or components added to a covered

Initials: EFM_____ Customer_____

Document Ref: 8MCWH-DTGWW-DYXXM-YVOHP

Vehicle by Lessee without the prior written consent of Lessor and/or damage to or loss of any property and/or personal effects contained in a covered Vehicle. In the event of a Casualty Occurrence to a covered Vehicle, Lessor may, at its option, replace, rather than repair, the damaged Vehicle with an equivalent vehicle, which replacement vehicle will then constitute the "Vehicle" for purposes of this Agreement; and (ii) if Section 4 of a Schedule includes a charge for commercial automobile liability enrollment, Lessor agrees that it will, at its expense, obtain for and on behalf of Lessee, by adding Lessee as an additional insured under a commercial automobile liability insurance policy issued by an insurance company selected by Lessor, commercial automobile liability insurance satisfying the minimum commercial automobile liability insurance required under Section 11(a) for the Vehicle(s) covered by such Schedule. Lessor may at any time during the applicable Term terminate said obligation to provide physical damage waiver and/or commercial automobile liability enrollment and cancel such physical damage waiver and/or commercial automobile liability enrollment upon giving Lessee at least ten (10) days prior written notice. Upon such cancellation, insurance in the minimum amounts as set forth in 11(a) shall be obtained and maintained by Lessee at Lessee's expense. An adjustment will be made in monthly rental charges payable by Lessee to reflect any such change and Lessee agrees to furnish Lessor with satisfactory proof of insurance coverage within ten (10) days after mailing of the notice. In addition, Lessor may change the rates charged by Lessor under this Section 11(b) for physical damage waiver and/or commercial automobile liability enrollment upon giving Lessee at least thirty (30) days prior written notice.

12. INDEMNITY: To the extent permitted by state law, Lessee agrees to defend and indemnify Lessor, Servicer, any other agent of Lessor and their respective successors and assigns from and against any and all losses, damages, liabilities, suits, claims, demands, costs and expenses (including, without limitation, reasonable attorneys' fees and expenses) which Lessor, Servicer, any other agent of Lessor or any of their respective successors or assigns may incur by reason of Lessee's breach or violation of, or failure to observe or perform, any term, provision or covenant of this Agreement, or as a result of any loss, damage, theft or destruction of any Vehicle or related to or arising out of or in connection with the use, operation or condition of any Vehicle. The provisions of this Section 12 shall survive any expiration or termination of this Agreement. Nothing herein shall be deemed to affect the rights, privileges, and immunities of Lessee and the foregoing indemnity provision is not intended to be a waiver of any sovereign immunity afforded to Lessee pursuant to the law.

13. INSPECTION OF VEHICLES; ODOMETER DISCLOSURE; FINANCIAL STATEMENTS: Lessee agrees to accomplish, at its expense, all inspections of the Vehicles required by any governmental authority during the Term. Lessor, Servicer, any other agent of Lessor and any of their respective successors or assigns will have the right to inspect any Vehicle at any reasonable time(s) during the Term and for this purpose to enter into or upon any building or place where any Vehicle is located. Lessee agrees to comply with all odometer disclosure laws, rules and regulations and to provide such written and signed disclosure information on such forms and in such manner as directed by Lessor. Providing false information or failure to complete the odometer disclosure form as required by law may result in fines and/or imprisonment. Lessee hereby agrees to promptly deliver to Lessor such financial statements and other financial information regarding Lessee as Lessor may from time to time reasonably request.

14. DEFAULT; REMEDIES: The following shall constitute events of default ("Events of Default") by Lessee under this Agreement: (a) if Lessee fails to pay when due any rent or other amount due under this Agreement and any such failure shall remain unremedied for ten (10) days; (b) if Lessee fails to perform, keep or observe any term, provision or covenant contained in Section 11 of this Agreement; (c) if Lessee fails to perform, keep or observe any other term, provision or covenant contained in this Agreement and any such failure shall remain unremedied for thirty (30) days after written notice thereof is given by Lessor, Servicer or any other agent of Lessor to Lessee; (d) any seizure or confiscation of any Vehicle or any other act (other than a Casualty Occurrence) otherwise rendering any Vehicle unsuitable for use (as determined by Lessor); (e) if any present or future guaranty in favor of Lessor of all or any portion of the obligations of Lessee under this Agreement shall at any time for any reason cease to be in full force and effect or shall be declared to be null and void by a court of competent jurisdiction, or if the validity or enforceability of any such guaranty shall be contested or denied by any guarantor, or if any guarantor shall deny that it, he or she has any further liability or obligation under any such guaranty or if any guarantor shall fail to comply with or observe any of the terms, provisions or conditions contained in any such guaranty; (f) the occurrence of a material adverse change in the financial condition or business of Lessee or any guarantor; or (g) if Lessee or any guarantor is in default under or fails to comply with any other present or future agreement with or in favor of Lessor, The Crawford Group, Inc. or any direct or indirect subsidiary of The Crawford Group, Inc.. For purposes of this Section 14, the term "guarantor" shall mean any present or future guarantor of all or any portion of the obligations of Lessee under this Agreement.

Upon the occurrence of any Event of Default, Lessor, without notice to Lessee, will have the right to exercise concurrently or separately (and without any election of remedies being deemed made), the following remedies: (a) Lessor may demand and receive immediate possession of any or all of the Vehicles from Lessee, without releasing Lessee from its obligations under this Agreement; if Lessee fails to surrender possession of the Vehicles to Lessor on default (or termination or expiration of the Term), Lessor, Servicer, any other agent of Lessor and any of Lessor's independent contractors shall have the right to enter upon any premises where the Vehicles may be located and to remove and repossess the Vehicles; (b) Lessor may enforce performance by Lessee of its obligations under this Agreement; (c) Lessor may recover damages and expenses sustained by Lessor, Servicer, any other agent of Lessor or any of their respective successors or assigns by reason of Lessee's default including, to the extent permitted by applicable law, all costs and expenses, including court costs and reasonable attorneys' fees and expenses, incurred by Lessor, Servicer, any other agent of Lessor or any of their respective successors or assigns in attempting or effecting enforcement of Lessor's rights under this Agreement (whether or not litigation is commenced) and/or in connection with bankruptcy or insolvency proceedings; (d) upon written notice to Lessee, Lessor may terminate Lessee's rights under this Agreement; (e) with respect to each Vehicle, Lessor may recover from Lessee all amounts owed by Lessee under Sections 3(b) and 3(c) of this Agreement (and, if Lessor does not recover possession of a Vehicle, (i) the estimated wholesale value of such Vehicle for purposes of Section 3(c) shall be deemed to be $0.00 and (ii) the calculations described in the first two sentences of Section 3(c) shall be made without giving effect to clause (ii) in each such sentence); and/or (f) Lessor may exercise any other right or remedy which may be available to Lessor under the Uniform Commercial Code, any other applicable law or in equity. A termination of this Agreement shall occur only upon written notice by Lessor to Lessee. Any termination shall not affect Lessee's obligation to pay all amounts due for periods prior to the effective date of such termination or Lessee's obligation to pay any indemnities under this Agreement. All remedies of Lessor under this Agreement or at law or in equity are cumulative.

15. ASSIGNMENTS: Lessor may from time to time assign, pledge or transfer this Agreement and/or any or all of its rights and obligations under this Agreement to any person or entity. Lessee agrees, upon notice of any such assignment, pledge or transfer of any amounts due or to become due to Lessor under this Agreement to pay all such amounts to such assignee, pledgee or transferee. Any such assignee, pledgee or transferee of any rights or obligations of Lessor under this Agreement will have all of the rights and obligations that have been assigned to it. Lessee's rights and interest in and to the Vehicles are and will continue

Initials: EFM_____ Customer_____

Document Ref: 8MCWH-DTGWW-DYXXM-YVOHP

at all times to be subject and subordinate in all respects to any assignment, pledge or transfer now or hereafter executed by Lessor with or in favor of any such assignee, pledgee or transferee, provided that Lessee shall have the right of quiet enjoyment of the Vehicles so long as no Event of Default under this Agreement has occurred and is continuing. Lessee acknowledges and agrees that the rights of any assignee, pledgee or transferee in and to any amounts payable by the Lessee under any provisions of this Agreement shall be absolute and unconditional and shall not be subject to any abatement whatsoever, or to any defense, setoff, counterclaim or recoupment whatsoever, whether by reason of any damage to or loss or destruction of any Vehicle or by reason of any defect in or failure of title of the Lessor or interruption from whatsoever cause in the use, operation or possession of any Vehicle, or by reason of any indebtedness or liability howsoever and whenever arising of the Lessor or any of its affiliates to the Lessee or to any other person or entity, or for any other reason.

Without the prior written consent of Lessor, Lessee may not assign, sublease, transfer or pledge this Agreement, any Vehicle, or any interest in this Agreement or in and to any Vehicle, or permit its rights under this Agreement or any Vehicle to be subject to any lien, charge or encumbrance. Lessee's interest in this Agreement is not assignable and cannot be assigned or transferred by operation of law. Lessee will not transfer or relinquish possession of any Vehicle (except for the sole purpose of repair or service of such Vehicle) without the prior written consent of Lessor.

16. MISCELLANEOUS: This Agreement contains the entire understanding of the parties. This Agreement may only be amended or modified by an instrument in writing executed by both parties. Lessor shall not by any act, delay, omission or otherwise be deemed to have waived any of its rights or remedies under this Agreement and no waiver whatsoever shall be valid unless in writing and signed by Lessor and then only to the extent therein set forth. A waiver by Lessor of any right or remedy under this Agreement on any one occasion shall not be construed as a bar to any right or remedy, which Lessor would otherwise have on any future occasion. If any term or provision of this Agreement or any application of any such term or provision is invalid or unenforceable, the remainder of this Agreement and any other application of such term or provision will not be affected thereby. Giving of all notices under this Agreement will be sufficient if mailed by certified mail to a party at its address set forth below or at such other address as such party may provide in writing from time to time. Any such notice mailed to such address will be effective one (1) day after deposit in the United States mail, duly addressed, with certified mail, postage prepaid. Lessee will promptly notify Lessor of any change in Lessee's address. This Agreement may be executed in multiple counterparts (including facsimile and pdf counterparts), but the counterpart marked "ORIGINAL" by Lessor will be the original lease for purposes of applicable law. All of the representations, warranties, covenants, agreements and obligations of each Lessee under this Agreement (if more than one) are joint and several.

17. SUCCESSORS AND ASSIGNS; GOVERNING LAW: Subject to the provisions of Section 15, this Agreement will be binding upon Lessee and its heirs, executors, personal representatives, successors and assigns, and will inure to the benefit of Lessor, Servicer, any other agent of Lessor and their respective successors and assigns. This Agreement will be governed by and construed in accordance with the substantive laws of the State of Missouri (determined without reference to conflict of law principles).

18. NON-PETITION: Each party hereto hereby covenants and agrees that, prior to the date which is one year and one day after payment in full of all indebtedness of Lessor, it shall not institute against, or join any other person in instituting against, Lessor any bankruptcy, reorganization, arrangement, insolvency or liquidation proceedings or other similar proceeding under the laws of the United States or any state of the United States. The provisions of this Section 18 shall survive termination of this Master Equity Lease Agreement.

19. NON-APPROPRIATION: Lessee's funding of this Agreement shall be on a Fiscal Year basis and is subject to annual appropriations. Lessor acknowledges that Lessee is a municipal corporation, is precluded by the County or State Constitution and other laws from entering into obligations that financially bind future governing bodies, and that, therefore, nothing in this Agreement shall constitute an obligation of future legislative bodies of the County or State to appropriate funds for purposes of this Agreement. Accordingly, the parties agree that the lease terms within this Agreement or any Schedules relating hereto are contingent upon appropriation of funds. The parties further agree that should the County or State fail to appropriate such funds, the Lessor shall be paid all rentals due and owing hereunder up until the actual day of termination. In addition, Lessor reserves the right to be paid for any reasonable damages. These reasonable damages will be limited to the losses incurred by the Lessor for having to sell the vehicles on the open used car market prior to the end of the scheduled term (as determined in Section 3 and Section 14 of this Agreement).

IN WITNESS WHEREOF, Lessor and Lessee have duly executed this Master Equity Lease Agreement as of the day and year first above written.

LESSEE: City of Brownsville

Signature:

By: Trey Mendez

Title: Mayor

Address: 1001 E. Elizabeth St.
Brownsville, Texas 78520

Date Signed: 11/12/2019

Approved as to legality and form
this 12 day of November 2019.
Name:
Title: Deputy City Attorney
Office of the City Attorney
1001 E. Elizabeth Street
Brownsville, TX 78520
Phone (956) 548-6011
Fax (956) 546-4291

LESSOR: Enterprise FM Trust
By: Enterprise Fleet Management, Inc. its attorney in fact

Signature:

By: Nathaniel Merz

Title: Regional Sales Manager

Address: 1505 Harry Wurzbach
San Antonio, TX 78209

Date Signed: September 30 2019

Initials: EFM_____ Customer_____

© 2018 Enterprise Fleet Management, Inc. H02544_Gov Equity

Document Ref: 8MCWH-DTGWW-DYXXM-YVOHP

enterprise
FLEET MANAGEMENT

AMENDMENT TO MASTER EQUITY LEASE AGREEMENT

THIS AMENDMENT ("Amendment") is attached to, and made a part of, the MASTER EQUITY LEASE AGREEMENT ("Agreement") by and between Enterprise FM Trust, a Delaware statutory trust ("Lessor") and the lessee whose name and address is set forth on the signature page below ("Lessee"). This Amendment is made for good and valuable consideration, the receipt of which is hereby acknowledged by the parties.

Section 12 of the Master Equity Lease Agreement is amended to read as follows:

INDEMNITY: As Lessee is a unit of local government of the State of Texas and is subject to, and comply with, the applicable provisions of the Texas Tort Claims Act, as set out in Civil Practices and Remedies Code, Section 101.001 et. seq. and the remedies authorized therein regarding claims or causes of action that may be asserted by breach of this Agreement. To the extent permitted by Texas law, Lessee agrees to defend and indemnify Lessor, Servicer, any other agent of Lessor and their respective successors and assigns from and against any and all losses, damages, liabilities, suits, claims, demands, costs and expenses (including, without limitation, reasonable attorneys' fees and expenses) which Lessor, Servicer, any other agent of Lessor or any of their respective successors or assigns may incur by reason of Lessee's breach or violation of, or failure to observe or perform, any term, provision or covenant of this Agreement, or as a result of any loss, damage, theft or destruction of any Vehicle or related to or arising out of or in connection with the use, operation or condition of any Vehicle. The provisions of this Section 12 shall survive any expiration or termination of this Agreement. Nothing herein shall be deemed to affect the rights, privileges, and immunities of Lessee and the foregoing indemnity provision is not intended to be a waiver of any sovereign immunity afforded to Lessee pursuant to Texas law.

Section 17 of the Master Equity Lease Agreement is amended to read as follows:

Subject to the provisions of Section 15, this Agreement will be binding upon Lessee and its heirs, executors, personal representatives, successors and assigns, and will inure to the benefit of Lessor, Servicer, any other agent of Lessor and their respective successors and assigns. This Agreement will be governed by and construed in accordance with the substantive laws of the State of Texas (determined without reference to conflict of law principles).

Section 19 of the Master Equity Lease Agreement is amended to read as follows:

NON-APPROPRIATION: Lessee's funding of this Agreement shall be on a Fiscal Year basis and is subject to annual appropriations. Lessor acknowledges that Lessee is a municipal Corporation, and being a unit of government, is precluded by the Texas State Constitution and other laws from entering into obligations that financially bind future governing bodies, and that, therefore, nothing in this Agreement shall constitute an obligation of future legislative bodies of the County or State to appropriate funds for purposes of this Agreement. Accordingly, the parties agree that the lease terms within this Agreement or any Schedules relating hereto are contingent upon appropriation of funds by the County or State. The parties further agree that should the County or State fail to appropriate such funds, the Lessor shall be paid all rentals due and owing hereunder up until the actual day of termination. In addition, the parties agree that Lessor may recover the losses incurred by the Lessor for having to sell the vehicles on the open used car market prior to the end of the scheduled term (as determined in Section 3 and Section 14 of this Agreement).

Additional Section 20 is added to the Master Equity Lease Agreement and reads as follows:

No Boycotting Israel. As required by Chapter 2270, Texas Government Code, Lessor hereby verifies that it does not boycott Israel and will not boycott Israel through the term of this Agreement. For purposes of this verification, "Boycott Israel" means refusing to deal with, terminating business activities with, or otherwise taking any action that is intended to penalize, inflict economic harm on, or limit commercial relations specifically with Israel, or with a person or entity doing business in Israel or in an Israeli-controlled territory, but does not include an action made for ordinary business purposes.

Document Ref: 8MCWH-DTGWW-DYXXM-YVOHP

enterprise
FLEET MANAGEMENT

All references in the Agreement and in the various Schedules and addenda to the Agreement and any other references of similar import shall henceforth mean the Agreement as amended by this Amendment. Except to the extent specifically amended by this Amendment, all of the terms, provisions, conditions, covenants, representations and warranties contained in the Agreement shall be and remain in full force and effect and the same are hereby ratified and confirmed.

IN WITNESS WHEREOF, Lessor and Lessee have executed this Amendment to Master Equity Lease Agreement as of the date signed below.

LESSEE: City of Brownsville

Signature:

By: Trey Mendez

Title: Mayor

Address: 1001 E. Elizabeth St.
Brownsville, Texas 78520

Date Signed: 11/12/2019

Approved as to legality and form
this 12 day of November, 20 19
Name:
Title: Deputy City Attorney
Office of the City Attorney
1001 E. Elizabeth Street
Brownsville, TX 78520
Phone (956) 548-6011
Fax (956) 546-4291

BROWNSVILLE
On the Border By the Sea

LESSOR: Enterprise FM Trust

By: Enterprise Fleet Management, Inc. its attorney in fact

Signature:

By: Nathaniel Merz

Title: Regional Sales Manager

Address: 1505 Harry Wurzbach
San Antonio, TX 78209

Date Signed: September 30, 2019

Document Ref: 8MCWH-DTGWW-DYXXM-YVOHP

enterprise
FLEET MANAGEMENT

MAINTENANCE AGREEMENT

This Maintenance Agreement (this "Agreement") is made and entered into this _____ day of _____, by Enterprise Fleet Management, Inc., a Missouri corporation ("EFM"), and _____ ("Lessee").

WITNESSETH

1. LEASE. Reference is hereby made to that certain Master Lease Agreement dated as of the _____ day of _____, by and between Enterprise FM Trust, a Delaware statutory trust, as lessor ("Lessor"), and Lessee, as lessee (as the same may from time to time be amended, modified, extended, renewed, supplemented or restated, the "Lease"). All capitalized terms used and not otherwise defined in this Agreement shall have the respective meanings ascribed to them in the Lease.

2. COVERED VEHICLES. This Agreement shall only apply to those vehicles leased by Lessor to Lessee pursuant to the Lease to the extent Section 4 of the Schedule for such vehicle includes a charge for maintenance (the "Covered Vehicle(s)").

3. TERM AND TERMINATION. The term of this Agreement ("Term") for each Covered Vehicle shall begin on the Delivery Date of such Covered Vehicle and shall continue until the last day of the "Term" (as defined in the Lease) for such Covered Vehicle unless earlier terminated as set forth below. Each of EFM and Lessee shall each have the right to terminate this Agreement effective as of the last day of any calendar month with respect to any or all of the Covered Vehicles upon not less than sixty (60) days prior written notice to the other party. The termination of this Agreement with respect to any or all of the Covered Vehicles shall not affect any rights or obligations under this Agreement which shall have previously accrued or shall thereafter arise with respect to any occurrence prior to termination, and such rights and obligations shall continue to be governed by the terms of this Agreement.

4. VEHICLE REPAIRS AND SERVICE. EFM agrees that, during the Term for the applicable Covered Vehicle and subject to the terms and conditions of this Agreement, it will pay for, or reimburse Lessee for its payment of, all costs and expenses incurred in connection with the maintenance or repair of a Covered Vehicle. This Agreement does not cover, and Lessee will remain responsible for and pay for, (a) fuel, (b) oil and other fluids between changes, (c) tire repair and replacement, (d) washing, (e) repair of damage due to lack of maintenance by Lessee between scheduled services (including, without limitation, failure to maintain fluid levels), (f) maintenance or repair of any alterations to a Covered Vehicle or of any after-market components (this Agreement covers maintenance and repair only of the Covered Vehicles themselves and any factory-installed components and does not cover maintenance or repair of chassis alterations, add-on bodies (including, without limitation, step vans) or other equipment (including, without limitation, lift gates and PTO controls) which is installed or modified by a dealer, body shop, upfitter or anyone else other than the manufacturer of the Covered Vehicle, (g) any service and/or damage resulting from, related to or arising out of an accident, a collision, theft, fire, freezing, vandalism, riot, explosion, other Acts of God, an object striking the Covered Vehicle, improper use of the Covered Vehicle (including, without limitation, driving over curbs, overloading, racing or other competition) or Lessee's failure to maintain the Covered Vehicle as required by the Lease, (h) roadside assistance or towing for vehicle maintenance purposes, (i) mobile services, (j) the cost of loaner or rental vehicles or (k) if the Covered Vehicle is a truck, (i) manual transmission clutch adjustment or replacement, (ii) brake adjustment or replacement or (iii) front axle alignment. Whenever it is necessary to have a Covered Vehicle serviced, Lessee agrees to have the necessary work performed by an authorized dealer of such Covered Vehicle or by a service facility acceptable to EFM. In every case, if the cost of such service will exceed $50.00, Lessee must notify EFM and obtain EFM's authorization for such service and EFM's instructions as to where such service shall be made and the extent of service to be obtained. Lessee agrees to furnish an invoice for all service to a Covered Vehicle, accompanied by a copy of the shop or service order (odometer mileage must be shown on each shop or service order). EFM will not be obligated to pay for any unauthorized charges or those exceeding $50.00 for one service on any Covered Vehicle unless Lessee has complied with the above terms and conditions. EFM will not have any responsibility to pay for any services in excess of the services recommended by the manufacturer, unless otherwise agreed to by EFM. Notwithstanding any other provision of this Agreement to the contrary, (a) all service performed within one hundred twenty (120) days prior to the last day of the scheduled "Term" (as defined in the Lease) for the applicable Covered Vehicle must be authorized by and have the prior consent and approval of EFM and any service not so authorized will be the responsibility of and be paid for by Lessee and (b) EFM is not required to provide or pay for any service to any Covered Vehicle after 100,000 miles.

5. ENTERPRISE CARDS: EFM may, at its option, provide Lessee with an authorization card (the "EFM Card") for use in authorizing the payment of charges incurred in connection with the maintenance of the Covered Vehicles. Lessee agrees to be liable to EFM for, and upon receipt of a monthly or other statement from EFM, Lessee agrees to promptly pay to EFM, all charges made by or for the account of Lessee with the EFM Card (other than any charges which are the responsibility of EFM under the terms of this Agreement). EFM reserves the right to change the terms and conditions for the use of the EFM Card at any time. The EFM Card remains the property of EFM and EFM may revoke Lessee's right to possess or use the EFM Card at any time. Upon the termination of this Agreement or upon the demand of EFM, Lessee must return the EFM Card to EFM. The EFM Card is non-transferable.

6. PAYMENT TERMS. The amount of the monthly maintenance fee will be listed on the applicable Schedule and will be due and payable in advance on the first day of each month. If the first day of the Term for a Covered Vehicle is other than the first day of a calendar month, Lessee will pay EFM, on the first day of the Term for such Covered Vehicle, a pro-rated maintenance fee for the number of days that the Delivery Date precedes the first monthly maintenance fee payment date. Any monthly maintenance fee or other amount owed by Lessee to EFM under this Agreement which is not paid within twenty (20) days after its due date will accrue interest, payable upon demand of EFM, from the date due until paid in full at a rate per annum equal to the lesser of (i) Eighteen Percent (18%) per annum or (ii) the highest rate allowed by applicable law. The monthly maintenance fee set forth on each applicable Schedule allows the number of miles per month as set forth

Initials: EFM_____ Customer_____

Document Ref: 8MCWH-DTGWW-DYXXM-YVOHP

in such Schedule. Lessee agrees to pay EFM at the end of the applicable Term (whether by reason of termination of this Agreement or otherwise) an overmileage maintenance fee for any miles in excess of this average amount per month at the rate set forth in the applicable Schedule. EFM may, at its option, permit Lessor, as an agent for EFM, to bill and collect amounts due to EFM under this Agreement from Lessee on behalf of EFM.

7. **NO WARRANTIES.** Lessee acknowledges that EFM does not perform maintenance or repair services on the Covered Vehicles but rather EFM arranges for maintenance and/or repair services on the Covered Vehicles to be performed by third parties. EFM MAKES NO REPRESENTATION OR WARRANTY OF ANY KIND, EXPRESS OR IMPLIED, WITH RESPECT TO ANY PRODUCTS, REPAIRS OR SERVICES PROVIDED FOR UNDER THIS AGREEMENT BY THIRD PARTIES, INCLUDING, WITHOUT LIMITATION, ANY REPRESENTATION OR WARRANTY AS TO MERCHANTABILITY, FITNESS FOR A PARTICULAR PURPOSE, COMPLIANCE WITH SPECIFICATIONS, OPERATION, CONDITION, SUITABILITY, PERFORMANCE OR QUALITY. ANY DEFECT IN THE PERFORMANCE OF ANY PRODUCT, REPAIR OR SERVICE WILL NOT RELIEVE LESSEE OF ITS OBLIGATIONS UNDER THIS AGREEMENT, INCLUDING THE PAYMENT TO EFM OF THE MONTHLY MAINTENANCE FEES AND OTHER CHARGES DUE UNDER THIS AGREEMENT.

8. **LESSOR NOT A PARTY.** Lessor is not a party to, and shall have no rights, obligations or duties under or in respect of, this Agreement.

9. **NOTICES.** Any notice or other communication under this Agreement shall be in writing and delivered in person or sent by facsimile, recognized overnight courier or registered or certified mail, return receipt requested and postage prepaid, to the applicable party at its address or facsimile number set forth on the signature page of this Agreement, or at such other address or facsimile number as any party hereto may designate as its address or facsimile number for communications under this Agreement by notice so given. Such notices shall be deemed effective on the day on which delivered or sent if delivered in person or sent by facsimile, on the first (1st) business day after the day on which sent, if sent by recognized overnight courier or on the third (3rd) business day after the day on which mailed, if sent by registered or certified mail.

10. **MISCELLANEOUS.** This Agreement embodies the entire Agreement between the parties relating to the subject matter hereof. This Agreement may be amended only by an agreement in writing signed by EFM and Lessee. Any provision of this Agreement which is prohibited or unenforceable in any jurisdiction shall, as to such jurisdiction, be ineffective only to the extent of such prohibition or unenforceability without invalidating the remaining provisions of this Agreement or affecting the validity or enforceability of such provisions in any other jurisdiction. This Agreement shall be binding upon and inure to the benefit of the parties hereto and their respective successors and assigns, except that Lessee may not assign, transfer or delegate any of its rights or obligations under this Agreement without the prior written consent of EFM. This Agreement shall be governed by and construed in accordance with the substantive laws of the State of Missouri (without reference to conflict of law principles).

IN WITNESS WHEREOF, EFM and Lessee have executed this Maintenance Agreement as of the day and year first above written.

LESSEE:	City of Brownsville	EFM:	Enterprise Fleet Management, Inc.
By:		By:	
Title:	Trey Mendez	Title:	Regional Sales Manager
Address:	Mayor 1001 E. Elizabeth St. Brownsville, Texas 78520	Address:	1505 Harry Wurzbach San Antonio, TX 78209
Attention:		Attention:	
Fax #:		Fax #:	
Date Signed:	11/12/2019	Date Signed:	September 30 2019

Approved as to legality and form
this 12 day of November 20 19.
Name:
Title:
Office of the City Attorney
1001 E. Elizabeth Street
Brownsville, TX 78520
Phone (956) 548-6011
Fax (956) 546-4291

Initials: EFM_____ Customer_____

© 2017 Enterprise Fleet Management, Inc. H02013_MainAgree_En

Document Ref: 8MCWH-DTGWW-DYXXM-YVOHP

Enterprise Quote Summary

Billing Summary

*The monthly lease amount includes interest and a management fee.
The management fee is .10% of the cost of the vehicle.
The fixed interest is calculated based on the 3-year treasury bill rate plus 3.5%.

*Lease termination service charge of $400 due at lease termination is for the disposal of vehicles and not due if city keeps vehicle.

Quote Number	Count	Description	Quoted Price	Annual Payment	Total 60-Month Lease Cost
4417245	7	F150 4x4 Supercab 6.5 ft Bed	29,229.00	45,979.08	229,895.40
4426149	1	F150 4x2 SuperCaB 5.5 Ft Bed	28,299.00	6,363.60	31,818.00
4426123	2	F150 4x4 RegCab 8 Ft Bed	28,193.00	12,642.24	63,211.20
4426164	2	F150 4x4 Supercab 5.5 ft Bed	31,650.00	14,202.96	71,014.80
4426106	2	F150 4x2 Reg Cab 8 Ft Bed	24,757.00	11,105.04	55,525.20
4426137	1	F150 4x2 SuperCaB 6.5 Ft Bed	26,754.00	6,013.68	30,068.40
4435367	3	F150 4x4 RegCab 6.5 Ft Bed	27,906.00	18,773.64	93,868.20
4426180	5	F250 4x2 SuperCab 8 Ft Bed	29,947.00	33,590.40	167,952.00
4417276	10	F250 4x4 Crew Cab 8 Ft Bed	34,224.00	76,598.40	382,992.00
4426188	3	F250 4x4 SuperCab 6.75 Fd Bed	32,407.00	21,779.28	108,896.40
4435437	2	F250 4x2 CrewCab 8 Ft Bed	31,031.00	14,045.52	70,227.60
4426210	1	F250 4x2 CrewCab 6.75 Ft Bed	31,141.00	6,981.00	34,905.00
4426227	1	F350 4x4 Crew Cab 8 Ft Bed	37,446.00	8,357.52	41,787.60
4426072	1	Ford Ranger 4x4 SuperCab 6 Ft Bed	28,163.00	6,261.60	31,308.00
4426227	9	E250 Transit 250 Cargo Medium Roof	31,684.00	63,645.48	318,227.40
4426235	1	E350 Transit 350 Passanger Low Roof	36,664.00	8,194.68	40,973.40
4426081	4	4x2 Ford Explorer	28,630.00	25,491.36	127,456.80
	55			**$ 380,025.48**	**$ 1,900,127.40**

Budgeted Annual Amount **$410,000**

Actual Annual Amount **$380,025**

* Because the lease quotes came in considerably underbudget, we were able to include additional equipment and stay within budget.

Add-ons Include:

- Back up alarms
- Spray-in Liners
- Platform running boards
- Crossbed Toolboxes

Document Ref: 8MCWH-DTGWW-DYXXM-YVOHP

To:	Mayor and City Commission
Through:	Alan Guard, Interim City Manager
From:	Will Trevino, City Attorney
Date:	Tuesday, July 21, 2026
Agenda #:	Consideration and **ACTION** on **Resolution Number 2026-109** authorizing preparation of an updated Service and Assessment Plan (SAP) for the Madeira Espiritu Santo Public Improvement District (PID) Number One; calling for and authorizing the publication of a Notice of Public Hearing regarding the updated SAP and levy of the PID assessments under Chapter 311, Texas Tax Code, and such other matters related thereto. (Planning & Redevelopment Department)

Summary:

Project Scope and Analysis:

Funding:

Source:

Amount:

Local Contribution if Applicable:

Recommendation:

Commission Pillar:

Economic Development, Planning & Zoning, Infrastructure, Public Safety, Quality of Life & Vibrancy, Governance

Attachments:

None

To:	Mayor and City Commission
Through:	Alan Guard, Interim City Manager
From:	Will Trevino, City Attorney
Date:	Tuesday, July 21, 2026
Agenda #:	Consideration and **APPROVAL** on **SECOND** and **FINAL READING** on **Ordinance Number 2026-1809** designating a +/- 1,021.48 acre area located in Cameron County, Texas, as a tax increment reinvestment zone; describing the boundaries of the zone; creating a board of directors for the zone; providing for an effective date and a termination date for the zone; naming the zone the "Estrella Reinvestment Zone Number Six, City of Brownsville"; establishing a tax increment fund; and containing other findings and provisions related thereto. (City Manager's Office)

Summary:

On June 5, 2026, the City of Brownsville, Texas (the "City") received a petition submitted by ML Rhodes, LLC, a Texas limited liability company (the "Petitioner") under TEX. TAX CODE § 311.005(a)(4) (the "Petition"), requesting, among other things, that the City Commission (the "Commission") designate and create a tax increment reinvestment zone ("TIRZ" or "Zone") in accordance with Chapter 311, Texas Tax Code ("Chapter 311"). The Petition was accepted on June 2, 2026, and a public hearing was called for July 7, 2026. A copy of the petition was filed with the City Secretary on the above date and seeks the designation of a TIRZ on approximately 1021.48 acres of property located in the City's corporate boundaries, with such property being as more particularly described in Exhibit "A" of the resolution (the "Property").

The attached ordinance designates a +/- 1,021.48 acre area located in Cameron County, Texas, as a tax increment reinvestment zone; describes the boundaries of the zone; creates a board of directors for the zone; provides for an effective date and a termination date for the zone; names the zone the "Estrella Reinvestment Zone Number Six, City of Brownsville"; establishes a tax increment fund; and contains other findings and provisions related thereto.

A second and final reading will occur on July 21, 2026.

Project Scope and Analysis:

Funding:

Source: Not Applicable

Amount:

Local Contribution if Applicable:

Recommendation:

Staff recommends adoption.

Commission Pillar:

Economic Development, Planning & Zoning, Infrastructure, Public Safety, Quality of Life & Vibrancy, Governance

Attachments:

1. TIRZ No. 6 Creation Ordinance (06.25.2026)

ORDINANCE NO. _____

AN ORDINANCE OF THE CITY COMMISSION OF THE CITY OF BROWNSVILLE, TEXAS, DESIGNATING A +/- 1,021.48 ACRE AREA LOCATED IN CAMERON COUNTY, TEXAS, AS A TAX INCREMENT REINVESTMENT ZONE; DESCRIBING THE BOUNDARIES OF THE ZONE; CREATING A BOARD OF DIRECTORS FOR THE ZONE; PROVIDING FOR AN EFFECTIVE DATE AND A TERMINATION DATE FOR THE ZONE; NAMING THE ZONE "REINVESTMENT ZONE NUMBER SIX, CITY OF BROWNSVILLE"; ESTABLISHING A TAX INCREMENT FUND; AND CONTAINING OTHER FINDINGS AND PROVISIONS RELATED THERETO.

WHEREAS, tax increment financing is an economic and community development tool authorized by the Tax Increment Financing Act, Texas Tax Code, Chapter 311 ("the Act"), used to promote development or redevelopment in areas where development or redevelopment would not occur solely through private investment in the reasonably foreseeable future; and

WHEREAS, the City Commission of the City of Brownsville, Texas (the "Commission") desires to support economic development, increase the availability of quality housing for the community, and enable the construction of public improvements and infrastructure, to be funded in whole or in part through tax increment financing pursuant to the provisions of the act; and

WHEREAS, the City of Brownsville, Texas ("City") received a petition dated June 8, 2026, submitted by ML Rhodes, LLC ("Developer") requesting the designation and creation of a tax increment reinvestment zone in accordance with and pursuant to TEX. TAX CODE § 311.005(a)(4) (the "Petition"); and

WHEREAS, pursuant to TEX. TAX CODE § 311.003, the City may designate a contiguous or noncontiguous geographic area within the corporate limits or extraterritorial jurisdiction of the City to be a reinvestment zone if the area satisfies certain requirements of the Act; and

WHEREAS, the area described in the Petition consists of approximately **1,021.48 acres** of real property located entirely in the corporate limits of the City and in Cameron County, Texas, with such property being as more particularly described in **Exhibit A**, attached hereto and incorporated herein (the "Property").

WHEREAS, Developer intends to develop a high quality, master planned residential community on the Property (the "Project"), as generally depicted in the site plan of the Project attached hereto as **Exhibit B**; and

WHEREAS, the Property is coterminous with the boundaries of the proposed Reinvestment Zone Number Six, City of Brownsville (the "TIRZ" or "Zone") and is predominantly open and undeveloped and, because of the need for site improvements and infrastructure, or other factors, substantially impairs or arrests the sound growth of the City; and

WHEREAS, the City examined the Petition and found that there is a demonstrated need for development of the area identified therein that would significantly benefit from Reinvestment Zone designation in accordance with the Act, enhance the value of the real property in the Zone and be of general benefit to the City; and

WHEREAS, the public improvements and related services to be provided within the Zone are those set forth in the preliminary financing plan for the Zone attached hereto as **Exhibit C**, prepared in accordance with Section 311.003 of the Act (the "Preliminary Financing Plan"); and

WHEREAS, pursuant to the Act, the City held a public hearing on **July 7, 2026**, regarding the creation of the Zone and its benefits to the City and Property at which interested persons were provided an opportunity to speak for or against the creation of the Reinvestment Zone, its boundaries, and/or the concept of tax increment financing. Notice of the above-referenced public hearing was published in a newspaper of general circulation within the City not later than seven (7) days before the date of the hearing; and

WHEREAS, the proposed Reinvestment Zone designation under the Act does not financially obligate the City; and

WHEREAS, Developer recognizes that there is no guarantee that the value of the Property in the proposed TIRZ will increase, that any increases in value are dependent upon many factors which are not within the City's control, and that there is no guarantee of any tax increment, as that term is defined in the Act; and

WHEREAS, the proposed TIRZ is statutorily eligible to be designated in accordance with the Act and shall take effect immediately upon passage of this Ordinance; and

WHEREAS, it is hereby found and determined that the meeting at which this Ordinance was passed was open to the public, and public notice of the time, place, and purpose of said meeting was given, all as required by Open Meetings Act, Chapter 551, Texas Government Code.

NOW, THEREFORE, BE IT ORDAINED BY THE CITY COMMISION OF THE CITY OF BROWNSVILLE, TEXAS, THAT:

SECTION 1. FINDINGS. The City hereby finds and declares in accordance with the Act that:

(a) The improvements in the Zone will significantly enhance the value of all the taxable real property in the Zone and will be of general benefit to the City and Property within the Zone;

(b) The Zone area meets the requirements of Section 311.005 of the Act;

(c) The Zone is being designated under Section 311.005(a)(4) of the Act, being that the Zone area is "an area described in a petition requesting that the area be designated as a reinvestment zone, if the petition is submitted to the governing body of the municipality or county by the owners of property constituting at least fifty (50%) percent of the appraised value of the property in the area according to the most recent certified appraisal roll for the county in which the area is located." TEX. TAX CODE § 311.005(a)(4);

(d) The proposed Zone is located wholly within the City's corporate boundaries and Cameron County, Texas; and

(e) The proposed Zone will promote development of the area to be included therein, which would not occur solely through private investment in the reasonably foreseeable future, and will greatly assist in increasing the availability of quality housing and job growth within the City.

SECTION 2. DESIGNATING THE AREA AS A REINVESTMENT ZONE. The Property described and depicted in **Exhibit A** and **Exhibit B** attached hereto, and officially assigned the name as designated in Section 6 below, is hereby designated as a tax increment reinvestment zone pursuant to the Act, and is so designated in accordance with and pursuant to TEX. TAX CODE 311.005(a)(4).

SECTION 3. DESCRIPTION OF THE ZONE BOUNDARIES. The Zone area shall consist of approximately 1,021.48 acres, with the Zone boundaries being coterminous with the Property and as more particularly described in **Exhibit A** and **Exhibit B** attached and incorporated herein by reference.

SECTION 4. CREATION AND COMPOSITION OF A BOARD OF DIRECTORS FOR THE ZONE AND AUTHORITY OF BOARD. There is hereby created a Board of Directors (the "Board") for the Zone, with all the rights, powers, and duties as provided by the Act. Pursuant to TEX. TAX CODE §§ 311.009(b) and 311.009(e)(2), the Board shall consist of **nine (9) members** and have the following composition:

a) *Members One through Six*. By this Ordinance, six members of the Board are appointed by the City of Brownsville, Texas, satisfying the requirements of TEX. TAX CODE § 311.009(e)(2), which said members for the purpose of establishing the initial Board shall be:

1. Nick Rhodes (hereby designated as initial Presiding Officer/Chair);
2. Sergio Pena;
3. Brad Frisby;
4. Misty Martin;
5. Jaime Gonzalez; and
6. Jon Rhodes.

b) Member Seven. The seventh member of the Board shall be designated by the Cameron County Commissioners Court as a participating taxing entity pursuant to and in accordance with TEX. TAX CODE § 311.009(b).

c) *Members Eight through Nine*. The eighth member of the Board shall be the member of the State Senate in whose district the Zone is located, or their designee, pursuant to TEX. TAX CODE § 311.009(b). The ninth member of the Board shall be the member of the State House of Representatives in whose district the Zone is located, or their designee, pursuant to TEX. TAX CODE § 311.009(b).

The term of each initial director shall be for a term of two (2) years. The term of each subsequent director shall be two (2) years. Vacancies shall be filled for the remainder of the unexpired term, by appointment made by the governing body that appointed the director who served in the vacated position.

The City shall annually appoint a member of the Board to serve as Chairman of the Board for a one-year term. The Board may elect a vice-chairman to serve in the absence of the chairman, and other officers as it deems appropriate.

The Board may hold its meetings at any place within the City as the Board may from time to time determine; provided that, in the absence of any such determination by the Board, the meetings shall be held at the place of regular business and public meetings for the City Commission of the City of Brownsville, Texas. The Board shall conduct its meetings in accordance with the requirements of the Act and such other applicable requirements of Texas law, including the Open Meetings Act, Chapter 551, Texas Government Code. Regular meetings of the Board shall be held at such times and places as shall be designated, from time to time, by resolution of the Board. Notice of regular meetings need not be given to each of the Directors but public notice of each meeting shall be given in the manner as may be required by law. Special meetings of the Board shall be held whenever called by the chairman, the vice-chairman in the absence of the chairman, or upon advice of or request by the City. A majority of the directors fixed by this Ordinance shall constitute a quorum for Board meetings. The act of a majority of the directors present at a meeting at which a quorum is in attendance shall constitute the act of the Board, unless the act of a greater number is required by law.

The Board shall make recommendations to the City concerning the administration of the Zone. The Board shall prepare and adopt a project plan and financing plan for the Zone and must submit such plans to the City for its final approval. The Board shall possess all powers necessary to prepare, monitor, and administer such project plan and financing plan for the Zone as set forth in the project plan, financing plan and Development Agreement (as defined below) (hereafter collectively the "Governing Documents"). The Board shall have the power to enter into agreements for the acquisition of professional services relating to accounting and auditing functions required for administration the Zone. Additionally, and specifically, pursuant to TEX. TAX CODE § 311.010(b), the Board and City may enter into agreements as the Board or City considers necessary or convenient to implement the project plan and reinvestment zone financing plan and achieve their purposes. Further, and in accordance with TEX. TAX CODE § 311.010(b), the Board and City may enter into agreement(s), which during its term, dedicates, pledges, or otherwise provides for the use of revenue in the tax increment fund to pay any project costs that benefit the Zone.

The Board shall have the power to review reimbursement requests submitted by the Developer and the City and shall approve payment of said reimbursements provided all of the prerequisites for approving the reimbursement as set forth in the Governing Documents have been complied with. All actions of the Board in administering the Zone must be carried out pursuant to the policies and procedures established by the Board, and must be in compliance with the Governing Documents, the Act, and any other applicable laws. The Board shall submit an annual report on the status of the Zone to the City no later than thirty (30) days prior to the end of the City's fiscal year. The Board may not undertake any of the projects set forth in the project plan or financing plan for the Zone in place of the Developer or the City without prior written authorization of the City to do so. Any powers not herein specifically delegated to the Board or already granted to the Board by virtue of the provisions of the Act are specifically reserved to the City and the Board shall not have any rights of the City with respect to the Zone unless specifically delegated herein or by the City pursuant to a subsequent ordinance.

SECTION 5. EFFECTIVE DATE AND TERMINATION DATE OF THE ZONE. The Zone shall take effect immediately upon passage of this Ordinance (the "Effective Date"). The term of the Zone shall be for a period of thirty (30) years, beginning on the earlier of: (i) the Effective Date; or (ii) the date of approval of the "Development Agreement," being that certain agreement between the City, the Zone, and ML Rhodes, LLC, or such other related entity developing the Property, (the "Term"), unless otherwise terminated earlier as a result of: (i) payment in full of all project costs, tax increment bonds or notes, if any, including interest on said bonds or notes; (ii) any termination of the Development Agreement as a result of the default of the Developer thereunder according to the terms of the Development Agreement, it being acknowledged that any such termination of the Development Agreement will result in the termination of the Zone, or (iii) as otherwise permitted by law.

SECTION 6. ASSIGNING A NAME TO THE ZONE. The Zone created hereby is assigned the name of "REINVESTMENT ZONE NUMBER SIX, CITY OF BROWNSVILLE."

SECTION 7. TAX INCREMENT BASE. The Tax Increment Base for the Zone is the total appraised value of all real property both within the Zone and taxable by the City, as determined as of January 1, 2026, or such other year for which the most recent certified tax roll is available at the time and date on which Zone was designated as a Tax Increment Reinvestment Zone (the "Tax Increment Base").

SECTION 8. LIMITATION OF TAX INCREMENT AND ESTABLISHMENT OF A TAX INCREMENT FUND. There is hereby created and established in the depository bank of the City, a fund to be called the "REINVESTMENT ZONE NUMBER SIX, CITY OF BROWNSVILLE, TAX INCREMENT FUND" (herein called the "Tax Increment Fund").

The Tax Increment Fund may be divided into additional accounts and sub-accounts authorized by further resolution or ordinance of the City Commission.

The Tax Increment Fund shall consist of, and there shall be deposited therein: (i) the percentage of the "tax increment," as defined by TEX. TAX CODE § 311.012(a), that each taxing unit which levies real property taxes in the Zone, other than the City, has elected to dedicate to the Tax Increment Fund under an agreement, if any, with the City authorized by Section 311.013(f) of the Act; plus (ii) an amount calculated as a millage rate per hundred dollars of Captured Appraised Value (as defined below) of real property in the Zone that equals fifty (50%) percent of the "City's Total Tax Rate" as the same is levied, collected and allocated to the City's general fund, up to the maximum aggregate amount as described and set forth in the project plan and financing plan for the Zone and the Development Agreement. As used above, the phrase "Captured Appraised Value" means the captured appraised value of the property in the Zone as defined by TEX. TAX CODE § 311.012(b) (i.e., the total appraised value of all real property taxable by the City and located in the Zone in any given year less Tax Increment Base. The amount of the tax increment to be contributed by the City to the Zone shall be deemed limited as set forth above for purposes of Section 311.013(l) of the Act and shall not exceed the total aggregate amount specified in the Governing Documents.

Any interest received on monies held within the Tax Increment Fund as a result of depository interest or investment of said funds shall be added to the balance of the Tax Increment Fund and such interest shall be credited towards the maximum amount to be contributed by the City to the Tax Increment Fund.

The Tax Increment Fund shall be maintained in an account at a depository bank of the City and shall be secured in the manner prescribed by law for Texas municipalities. In addition, all revenues from (i) the sale of any obligations hereafter issued by the City and secured in whole or in part from the tax increments; (ii) revenues from the sale of any property acquired as part of a tax increment financing plan adopted by the Board; and (iii) other revenues dedicated to and used in the Zone shall be deposited into the Tax Increment Fund. Prior to the termination of the Zone, money shall be disbursed from the Tax Increment Fund only to pay project costs, as defined by the Texas Tax Code and pursuant to the terms

of the Development Agreement, for the Zone, or to satisfy the claims of holders of tax increments bonds or notes issued for the Zone, as may be applicable.

Any expenditure to be made from the Tax Increment Fund or any contract related thereto, must be approved by the City prior to such expenditure being made or contract being executed. Approval of the project plan and financing plan shall constitute approval by the City for payments and/or reimbursements for the various Zone projects identified therein in accordance with such plans, provided such payment is approved by the Board according to the policies and procedures set forth in the project plan, financing plan and Development Agreement. Notwithstanding any provision contained herein, revenues of the Zone may be pledged to assist financing the authorized improvement costs of a public improvement district to the extent such costs are associated with the improvements identified in the Project and Financing Plans of the Zone.

SECTION 9. APPROVAL OF PRELIMINARY FINANCING PLAN. The City hereby finds that the plan attached hereto as **Exhibit C** is economically feasible, was prepared in accordance with Section 311.003 of the Act and approves such plan as the Preliminary Financing Plan for the Zone.

SECTION 9. INCORPORATION OF RECITALS. The City hereby finds that the statements set forth in the recitals of this Ordinance are true and correct, and the City hereby incorporates such recitals as a part of this Ordinance.

SECTION 10. SEVERABILITY. If any provision of this Ordinance or the application thereof to any circumstances shall be held to be invalid, the remainder of this Ordinance and the application thereof to other circumstances shall nevertheless be valid, as if such invalid provision had never appeared herein, and this governing body hereby declares that this Ordinance would have been enacted without such invalid provision.

SECTION 11. EFFECTIVE DATE. The Zone shall take effect immediately upon passage of this Ordinance, pursuant to Section 311.004(a)(3) of the Act.

[*SIGNATURE & ATTESTATION ON FOLLOWING PAGE*]

INTRODUCED and PASSED at a FIRST READING on the 7th day of July, 2026**.**

APPROVED and PASSED on the SECOND and FINAL READING on this the ___ day of July, 2026.

CITY OF BROWNSVILLE, TEXAS

_____
John Cowen Jr.,
Mayor

ATTEST:

_____
Mayra Rios, TRMC
City Secretary

APPROVED AS TO FORM AND LEGALITY:

_____
Guillermo (Will) S. Trevino,
City Attorney

EXHIBIT A
Zone Property Description

Reinvestment Zone No. 6, City of Brownsville - Property Ownership
Information from Cameron CAD - Properties in Zone

Tract	Property ID	GEO ID	Property Owner	Legal Acreage	Appraised Value	Taxable Value
TRACT # 1						
	169988	79-2220-0100-0000-00	ML RHODES, LLC	124.8000	$ 120,108.00	$ 120,108.00
			Totals =	**124.8000**	**$ 120,108.00**	**$ 120,108.00**
TRACT # 2						
	169983	79-2220-0090-0100-00	ML RHODES, LLC	300.0000	$ 360,000.00	$ 360,000.00
			Totals =	**300.0000**	**$ 360,000.00**	**$ 360,000.00**
TRACT # 3						
	169968	79-2220-0060-0200-00	ML RHODES, LLC	21.3000	$ 217,260.00	$ 217,260.00
			Totals =	**21.3000**	**$ 217,260.00**	**$ 217,260.00**
TRACT # 4						
	169969	79-2220-0060-0200-01	ML RHODES, LLC	31.4520	$ 188,712.00	$ 188,712.00
			Totals =	**31.4520**	**$ 188,712.00**	**$ 188,712.00**
TRACT # 5						
	450516	79-2220-0060-0201-00	ML RHODES, LLC	24.3080	$ 399,624.00	$ 399,624.00
			Totals =	**24.3080**	**$ 399,624.00**	**$ 399,624.00**
TRACT # 6						
	169970	79-2220-0060-0300-00	ML RHODES, LLC	116.1100	$ 696,660.00	$ 696,660.00
			Totals =	**116.1100**	**$ 696,660.00**	**$ 696,660.00**
TRACT # 7						
	169982	79-2220-0080-0000-00	ML RHODES, LLC	134.7500	$ 269,500.00	$ 269,500.00
			Totals =	**134.7500**	**$ 269,500.00**	**$ 269,500.00**
TRACT #8						
	153529	77-9980-0310-0000-00	ML RHODES, LLC	42.5650	$ 85,130.00	$ 85,130.00
			Totals =	42.5650	**$ 85,130.00**	**$ 85,130.00**
TRACT #9						
	153517	77-9980-0170-0000-00	ML RHODES, LLC	47.2482	$ 84,883.00	$ 84,883.00
			Totals =	47.2482	**$ 84,883.00**	**$ 84,883.00**
TRACT # 10						
	153497	77-9980-0030-0000-00	ML RHODES, LLC	47.2482	$ 94,496.00	$ 94,496.00
			Totals =	**47.2482**	**$ 94,496.00**	**$ 94,496.00**
TRACT # 11						
.	450405	79-2220-0060-0506-00	ML RHODES, LLC	24.0330	$ 144,198.00	$ 144,198.00
			Totals =	**24.0330**	**$ 144,198.00**	**$ 144,198.00**
TRACT # 12						
	452842	79-2220-0060-0507-00	ML RHODES, LLC	23.0390	$ 423,796.00	$ 423,796.00
			Totals =	23.0390	**$ 423,796.00**	**$ 423,796.00**
TRACT # 13						
	169990	79-2220-0110-0010-00	FORSHAGE LAND INVESTMENTS, INC.	54.0950	$ 523,100.00	$ 523,100.00
			Totals =	**54.0950**	**$ 523,100.00**	**$ 523,100.00**
TRACT # 14						
	415517	79-2220-0060-0600-00	FORSHAGE LAND INVESTMENTS, INC.	1.6050	$ 72,487.00	$ 72,487.00
			Totals =	**1.6050**	**$ 72,487.00**	**$ 72,487.00**
TRACT # 15						
	454705	79-2275-0000-0010-00	SAN MANUEL PROPERTIES, LLC	8.0000	$ 928,539.00	$ 928,539.00
			Totals =	**8.0000**	**$ 928,539.00**	**$ 928,539.00**
TRACT # 16						
.	169496	79-2210-0070-0011-00	CITY OF BROWNSVILLE	1.0000	$ 26,136.00	$ -
			Totals =	**1.0000**	**$ 26,136.00**	**$ -**
TRACT # 17						
	169497	79-2210-0070-0011-10	CITY OF BROWNSVILLE	19.9270	$ 255,715.00	$ -
			Totals =	19.9270	**$ 255,715.00**	**$ -**
				TOTAL ACREAGE =	**$ 1,021.48**	
				TOTAL APPRAISED VALUE=	**$ 4,890,344.00**	
				TOTAL BASE VALUE =	**$ 4,608,493.00**	

PERCENTAGE OWNERSHIP BY PETITIONERS

OWNER OF RECORD	Percentage (Acreage)	Appraised Value	Taxable Value
ML RHODES, LLC	91.7153%	63.0706%	66.9279%
FORSHAGE LAND INVESTMENTS, INC.	5.4529%	12.1788%	12.9237%
SAN MANUEL PROPERTIES, LLC	0.7832%	18.9872%	20.1484%
CITY OF BROWNSVILLE	2.0487%	5.7634%	0.0000%
Totals =	**100.0000%**	**100.0000%**	**100.0000%**

EXHIBIT B
Site Plan of Project

EXHIBIT C
Preliminary Financing Plan for
Reinvestment Zone Number Six, City of Brownsville
(See Attached)

Reinvestment Zone Number Six, City of Brownsville
Preliminary Financing Plan

June 25, 2026

TABLE OF CONTENTS

I. Executive Summary……... 2

II. Preliminary Financing Plan for Reinvestment Zone Number Six, City of Brownsville……. 5

III. Conclusions……... 11

IV. Exhibits……. 12

Exhibit 1 – Location Map ..... Ex. 1

Exhibit 2 – Financial Model and Information ..... Ex. 2

I. EXECUTIVE SUMMARY

BACKGROUND OF PROPOSED REINVESTMENT ZONE NUMBER SIX, CITY OF BROWNSVILLE

Tax increment financing is both an economic and community development tool authorized by the Tax Increment Financing Act, Texas Tax Code, Chapter 311, as amended ("Chapter 311"), used to promote development or redevelopment in areas where development or redevelopment would not occur solely through private investment in the reasonably foreseeable future.

The City of Brownsville, Texas (the "City), received a petition submitted by ML Rhodes, LLC, a Texas limited liability company (the "Developer"), seeking designation of a reinvestment zone in accordance with and pursuant to TEX. TAX CODE § 311.005(a)(4) (the "Petition"). The area described in the Petition consisted of approximately 1,021.48 acres of real property located in the corporate limits of the City, and entirely in Cameron County, Texas.

The City examined the Petition and found that there was a demonstrated need for development and revitalization of the area described in the Petition, and in accordance with § 311.003(b), TEX. TAX. CODE, the City prepared this preliminary financing plan ("Preliminary Financing Plan").

THE TIRZ CONCEPT

Tax Increment Reinvestment Zone

TIRZ stands for "Tax Increment Reinvestment Zone." TIRZs are governed by Chapter 311 of the Texas Tax Code (Chapter 311). As of 2023, there were 477 active TIRZs created by 205 cities across Texas. TIRZs are used as a form of tax increment financing, which is an economic development tool used to attract both development and/or redevelopment. A city or county may create a TIRZ under Chapter 311 and, if created, the governing body establishes the boundaries of the zone, appoints an initial board of directors, and provides a termination date for the TIRZ.

Tax Increment Financing (TIF)

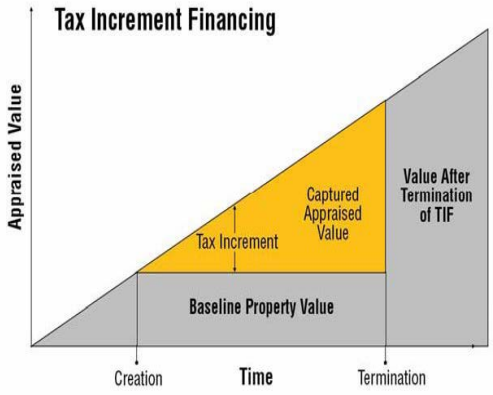

Tax Increment Financing is not an additional tax. Instead, at the time of TIRZ creation a "base tax value" is established for property located within the TIRZ boundaries. Each year the property taxes collected up to that base tax value—within the TIRZ—continue to go into the general fund of each participating taxing entity, such as the City. However, as property within the TIRZ develops and increases in value, property taxes collected over and above that base tax value are allocated to the TIRZ fund and may be used for costs of public works, public improvements, programs, or other projects benefitting property within the TIRZ and authorized under Chapter 311. The additional property taxes collected within the TIRZ over and above the base tax value are referred to as the "tax increment."

TIRZ Benefits

Tax increment financing is a tool that local governments can use to publicly finance needed structural improvements and enhanced infrastructure within a defined area. Benefits of a TIRZ generally include:

- Does not affect revenue currently going to the general fund of a city that it depends on for providing existing services;
- Does not involve additional or increased taxes on existing or new developments to produce revenues to serve as economic development incentives to attract investment;
- Does not involve the forgiveness of taxes;
- Creates an opportunity to include other taxing jurisdictions in providing the tax incentives used for new public infrastructure and revitalization efforts;
- Captures only the incremental increase in taxes on real property in the TIRZ (e.g., not business personal property, inventory, sales taxes) leaving those revenues available to benefit the city almost immediately;
- Assists with eligible costs for necessary public infrastructure in areas where the same is inadequate or lacking.

OVERVIEW OF PROPOSED PROJECT

If created, Reinvestment Zone Number Six, City of Brownsville (the "Zone" or the "TIRZ") would represent an important economic opportunity for the future of the City of Brownsville, Texas (the "City"). It will promote and encourage construction of approximately 1,021.48.13 acres of master planned mixed use development, with residential, multifamily, and commercial, as well as aid in facilitating the construction of public improvements and much-needed infrastructure modernization (the "Project").

The property included in the Petition has remained largely vacant, un/under-developed, or in dire need of revitalization because either: (1) the costs associated with developing the land in the preferred manner prohibit the efficient use of the property, or (2) the property has been unavailable for development when development should have occurred and current development costs for the desired development are uneconomical. Creation of the TIRZ would allow for (i) the development of a significant amount of industrial building/warehouse space; (ii) assistance in facilitating construction of roadways and other necessary public infrastructure in connection with the Project; (iii) provides a mechanism by which the City and Cameron County (the "County") can work together in financing necessary public improvements and utility infrastructure that are of a benefit to property within the proposed Zone and the City as a whole; (iv) allow for the creation of new jobs and related economic development that will cause public benefits that would otherwise be very difficult, if not impossible, to obtain due to costs that include on and off-site street and utility improvements and extensions.

If created, the Zone would be comprised of seventeen (17) total tracts of property located in an economically disadvantaged and/or blighted area within the city limits of the City (collectively, the "Property"). These seventeen (17) tracts are shown in greater detail on the map depicting the Property attached to this Preliminary Financing Plan as **Exhibit 1**.

ANTICIPATED BENEFITS OF DEVELOPMENT WITHIN THE PROPOSED ZONE

The projected benefits of the proposed Zone to the City and current/future residents of the community are as follows[1]:

[1] Project layout, total number of residential units, or both may change due to changing market conditions and/or platting, regulatory or development requirements.

- Construction of approximately three thousand six hundred two (3,602) high quality, master planned residential units; comprised of one thousand three hundred thirty-nine (1,339) entry level homes, six hundred eighty-three (683) first move-up homes, four hundred fifty-two (452) second move-up homes, three hundred twenty-nine (329) villa-style homes, three hundred sixty-nine (369) single-family rental homes, and four hundred thirty (430) multi-family/apartment units, with a final projected taxable value over the life of the proposed Zone of Two Billion Four Hundred Ninety Million Nine Hundred Sixty-Nine Thousand Three Hundred Seventy-Two and 91/100 ($2,490,969,372.91) Dollars;

- Construction of approximately one hundred thousand (100,000 ft^2) square feet of high quality, office/commercial space, with a final projected taxable value over the life of the proposed Zone of Forty-Eight Million Five Hundred Forty-Five Thousand Two Hundred Forty-Nine and 42/100 ($48,545,249.42) Dollars;

- Expansion of customer base utilizing City owned utilities;

- Attraction of local employers and increased quality employment opportunities;

- Future projected additional tax base to City estimated to be Two Billion Five Hundred Thirty-Nine Million Five Hundred Fourteen Thousand Six Hundred Twenty-Two and 34/100 ($2,539,514,622.34) Dollars over the life of the proposed Zone;

- Potential for interlocal cooperative partnership between City and Cameron County for public improvement projects by utilizing this economic development tool available under Texas law;

- Create quality housing to enhance and support the rapidly increasing population, and improve the economy of the overall area within the City;

- Provide for newly constructed water, wastewater, drainage, electric, and road infrastructure;

- Enhance quality of life within the proposed Zone and City as a whole; and

- Create a new and replicable standard for more sustainable development within the City that encourages new development to pay for itself in a greater amount and does not place the burden unfairly on the current budgets of the City and/or County or on the existing taxpayers.

(*Remainder of Page Intentionally Left Blank*)

II. PRELIMINARY FINANCING PLAN FOR REINVESTMENT ZONE NUMBER SIX, CITY OF BROWNSVILLE

The Preliminary Financing Plan for Reinvestment Zone Number Six, City of Brownsville, provides information on the projected monetary impact that the TIRZ could have on the Property depicted in **Exhibit 1** which is within the boundaries of the proposed Zone. It also describes how that impact would be utilized to enhance the area and region through leveraging the resources of the City and County in participating in the Project.

ESTIMATED PROJECT COSTS AND EXPENSES

The Public Improvements which would be constructed and financed pursuant to the Preliminary Financing Plan are those shown in **Exhibit 2**, including anticipated administrative and formation costs of the Zone. The total Project costs and expenses are estimated to be Two Hundred Sixty-One Million Sixty-Five Thousand Seven Hundred Forty-Five and 84/100 ($261,065,745.84) Dollars.

LIST OF PUBLIC WORKS AND IMPROVEMENTS

"Project Costs" authorized under Section 311.002(1) of the Texas Tax Code are costs that may be paid by the City from the tax increment revenue generated from within the proposed Zone and deposited in the tax increment fund which would be established for the Zone pursuant to a future City Ordinance creating the Zone. Generally, these "Project Costs" may include such costs allowed under TEX. TAX CODE § 311.002(1), such as capital costs, including the actual costs of the acquisition and construction of public works, public improvements, new buildings, structures, and fixtures; the actual costs of the acquisition, demolition, alteration, remodeling, repair, or reconstruction of existing buildings, structures, and fixtures; the actual costs of the remediation of conditions that contaminate public or private land or buildings; the actual costs of the preservation of the facade of a public or private building; the actual costs of the demolition of public or private buildings; and the actual costs of the acquisition of land and equipment and the clearing and grading of land; financing costs, including all interest paid to holders of evidences of indebtedness or other obligations issued to pay for project costs and any premium paid over the principal amount of the obligations because of the redemption of the obligations before maturity; real property assembly costs; professional service costs, including those incurred for architectural, planning, engineering, and legal advice and services; imputed administrative costs, including reasonable charges for the time spent by employees of the municipality or county in connection with the implementation of a project plan; relocation costs; organizational costs, including the costs of conducting environmental impact studies or other studies, the cost of publicizing the creation of the zone, and the cost of implementing the project plan for the zone; interest before and during construction and for one year after completion of construction, whether or not capitalized; the cost of operating the reinvestment zone and project facilities; the amount of any contributions made by the municipality or county from general revenue for the implementation of the project plan; the costs of school buildings, other educational buildings, other educational facilities, or other buildings owned by or on behalf of a school district, community college district, or other political subdivision of this state; and payments made at the discretion of the governing body of the municipality, school district or county that the governing body finds necessary or convenient to the creation of the zone or to the implementation of the project plans for the zone. *See* TEX. TAX CODE § 311.002(1).

For the purposes of the proposed Zone and this Preliminary Financing Plan, project costs refer to those costs authorized under Chapter 311 **and** identified in the Preliminary Financing Model attached hereto as **Exhibit 2** (the "Project Costs"). The anticipated Project Costs are estimated to be Two Hundred Sixty-One Million

Sixty-Five Thousand Seven Hundred Forty-Five and 84/100 ($261,065,745.84) Dollars, of which: (i) Two Hundred Sixty Million Five Hundred Sixty-Five Thousand Seven Hundred Forty-Five and 84/100 ($260,565,745.84) Dollars, plus interest and financing costs thereon, are to be incurred by Developer for construction of Project improvements, and (ii) Five Hundred Thousand and No/100 ($500,000.00) Dollars is allocated for payment of Administrative and Formation Costs associated with the formation and future administration of the proposed Zone, all as authorized under Chapter 311 and, specifically, TEX. TAX. CODE § 311.002(1).

PROJECT FEASIBILITY

The City Commission has thoroughly reviewed this Preliminary Financing Plan for the proposed Zone and has found the same to be economically feasible, as expressed more fully in the Preliminary Financing Model attached hereto as **Exhibit 2**, which establishes that the Project is both economically feasible and is within market absorption capabilities.

ESTIMATED BOND INDEBTEDNESS & TIMELINE

The proposed Zone is not anticipated to issue any bonds at this time; however, if the Zone is created, the City may use bonds in the future to fund additional improvements which benefit the Zone. If the Zone is formed, such related costs or monetary obligations are estimated to be incurred beginning in 2026 and ending in 2056.

FINANCING PLAN OVERVIEW

The Tax Increment Base for the proposed Zone is Four Million Six Hundred Eight Thousand Four Hundred Ninety-Three and No/100 ($4,608,493.00) Dollars (hereinafter also referred to "Base Value"). Pursuant to a future City Ordinance and an Interlocal Agreement to be entered into between the City, County and Zone, each respective taxing entity is anticipated to participate in the Zone by contributing varying percentage(s) of their respective Tax Increments into the Tax Increment Fund which are estimated to be in the amounts shown in the attached **Exhibit 2**, consisting of the revenue generated within the proposed Zone from the respective tax rates as assessed and collected on the Captured Appraised Value for each respective tax year during the term of the Zone, if created.

The proposed Zone would provide funding for approximately One Hundred Seventy-Five Million One Hundred Seventy-Seven Thousand Six Hundred Thirty-One and 37/100 ($175,177,631.37) Dollars, or One Hundred Sixty-Nine Million Nine Hundred Twenty-Two Thousand Three Hundred Two and 43/100 ($169,922,302.43) Dollars at Ninety-Seven (97%) Percent collection rate, of planned and future Public Infrastructure Improvements which are authorized as eligible for reimbursement under Chapter 311, including interest, Formation Costs, and Administrative Costs. The Preliminary Financing Plan indicates that if created, the Zone will yield adequate revenues to provide for incremental financing of a substantial amount of the Project Costs as indicated in **Exhibit 2**. In the event of a shortfall in revenue for Project Costs, such shortfalls would be paid by Developer. Total projected revenue over the life of the proposed Zone is anticipated to be in excess of One Hundred Sixty-Nine Million Nine Hundred Twenty-Two Thousand Three Hundred Two and 43/100 ($169,922,302.43) Dollars, leaving an anticipated shortfall of Ninety-One Million One Hundred Forty-Three Thousand Four Hundred Forty-Three and 41/100 ($91,143,443.41) Dollars to be paid by Developer.

MAXIMUM CONTRIBUTIONS

Maximum anticipated amount(s) of contribution to the TIRZ from the City and County from their respective ad valorem taxes on the Captured Appraised Value shall not exceed those projected in **Exhibit 2**.

FINANCING METHOD

Initial financing for the Project is anticipated to be accomplished through a combination of Developer equity, private investment capital, construction and development financing, and the issuance of Public Improvement District bonds ("PID Bonds"), which are expected to serve as the primary long-term financing mechanism for eligible public infrastructure and related Project Costs. In addition, the Project may utilize TIRZ revenues and reimbursements, Tax Increment Bonds, Tax Anticipation Notes, General Revenue Bonds, Certificates of Obligation, grants, economic development incentives, utility or special district financing, public-private partnership arrangements, reimbursement agreements, and such other public or private financing sources as may become available and economically advantageous during the development of the Project.

The City is anticipated to participate at fifty percent (50%) of its Tax Increment over the life of the proposed Zone, and the County is anticipated to participate at fifty percent (50%) of its Maintenance and Operations ("M&O") Tax Increment, as shown in Exhibit 2. In the event PID Bonds, Tax Increment Bonds, or other financing obligations are issued, Available Tax Increment generated within the Zone may be used, to the extent permitted by law, to support, reimburse, offset, buy down, prepay, redeem, defease, or otherwise retire all or a portion of such obligations and related financing costs.

Subject to approval by the City Commission, the Estrella development is proposed to be located within the boundaries of the Estrella Public Improvement District (the "PID" or "Estrella PID"). The PID is anticipated to finance public infrastructure and related improvements through the levy of assessments and the issuance of PID Bonds; however, the City, the Zone, and the Developer reserve the right to utilize alternative or supplemental financing mechanisms should they become available or provide economic benefits to the Project.

The Final Project Plan and Financing Plan for the Zone may provide for the use of Tax Increment revenues to reimburse Eligible Project Costs, reduce or buy down PID Assessments, support debt service on PID Bonds or other authorized financing obligations, fund reserves and issuance costs, and otherwise finance or reimburse Project Costs authorized under the TIRZ Act, the PID Act, and other applicable law.

(*Remainder of Page Intentionally Left Blank)*

Figure 1

Sources of Revenue Reinvestment Zone No. 6, City of Brownsville			
	Tax Revenue		
Year	City	County	TOTAL
0	$ -	$ -	$ -
1	$ 3,108.05	$ 1,737.00	$ 4,845.04
2	$ 3,201.29	$ 1,789.11	$ 4,990.39
3	$ 16,486.63	$ 9,213.90	$ 25,700.53
4	$ 142,536.34	$ 79,659.46	$ 222,195.80
5	$ 327,120.18	$ 182,818.05	$ 509,938.23
6	$ 572,654.27	$ 320,039.98	$ 892,694.25
7	$ 986,528.18	$ 551,342.18	$ 1,537,870.35
8	$ 1,274,005.43	$ 712,004.94	$ 1,986,010.37
9	$ 1,614,569.46	$ 902,336.36	$ 2,516,905.82
10	$ 1,936,592.94	$ 1,082,306.00	$ 3,018,898.94
11	$ 2,298,739.52	$ 1,284,699.29	$ 3,583,438.81
12	$ 2,692,918.29	$ 1,504,994.46	$ 4,197,912.75
13	$ 3,176,478.27	$ 1,775,242.20	$ 4,951,720.47
14	$ 3,549,243.71	$ 1,983,570.06	$ 5,532,813.77
15	$ 3,941,516.24	$ 2,202,799.88	$ 6,144,316.11
16	$ 4,261,460.13	$ 2,381,607.30	$ 6,643,067.43
17	$ 4,531,268.16	$ 2,532,395.24	$ 7,063,663.39
18	$ 4,781,496.98	$ 2,672,240.92	$ 7,453,737.89
19	$ 5,000,373.80	$ 2,794,564.86	$ 7,794,938.66
20	$ 5,228,079.88	$ 2,921,823.23	$ 8,149,903.11
21	$ 5,464,947.99	$ 3,054,202.00	$ 8,519,149.99
22	$ 5,711,322.92	$ 3,191,893.85	$ 8,903,216.76
23	$ 5,967,561.88	$ 3,335,098.43	$ 9,302,660.31
24	$ 6,234,035.00	$ 3,484,022.57	$ 9,718,057.57
25	$ 6,511,125.70	$ 3,638,880.58	$ 10,150,006.28
26	$ 6,808,508.38	$ 3,805,079.19	$ 10,613,587.57
27	$ 7,012,763.63	$ 3,919,231.57	$ 10,931,995.20
28	$ 7,223,146.54	$ 4,036,808.52	$ 11,259,955.06
29	$ 7,439,840.94	$ 4,157,912.77	$ 11,597,753.71
30	$ 7,663,036.16	$ 4,282,650.16	$ 11,945,686.32
Totals:	$ 112,374,667.16	$ 62,802,964.21	**$ 175,177,631.37**

CURRENT APPRAISED VALUE

The Tax Increment Base, which represents the total appraised value of taxable real property located within the boundaries of the proposed Zone, would be Four Million Six Hundred Eight Thousand Four Hundred Ninety-Three and No/100 ($4,608,493.00) Dollars - using the 2026 values provided by the Cameron County Appraisal District, the most recent certified appraised values (hereinafter also referred to "Base Value").

FINANCIAL ASSUMPTIONS

The Preliminary Financing Plan is based upon conservative assumptions. Accordingly, the Preliminary Financing Plan assumes that there will be no tax rate changes during the project term and assumes an increase in assessed values of existing tax base of three (3.00%) percent per year.

The Preliminary Financing Plan also assumes that participating taxing entities will continue to collect tax revenues at the same rate and that homestead and other exemption rates will remain unchanged. Build-out rates of tax base within the Preliminary Financing Plan are based on conservative rates of absorption.

ESTIMATED CAPTURED APPRAISED VALUE

The estimated captured appraised value of the proposed Zone during each year of its existence can be seen in **Exhibit 2**, and in **Figure 2** below:

Figure 2
Estimated Captured Appraised Values During Proposed Zone Term

Estimated Captured Appraised Value (Cumulative)	
Year	Value
0	$ -
1	$ 1,030,000.00
2	$ 1,060,900.00
3	$ 5,463,635.00
4	$ 47,236,254.15
5	$ 108,406,964.66
6	$ 189,776,462.94
7	$ 326,933,434.05
8	$ 422,202,813.84
9	$ 535,065,040.59
10	$ 641,782,966.42
11	$ 761,797,607.33
12	$ 892,427,652.51
13	$ 1,052,678,448.37
14	$ 1,176,212,156.38
15	$ 1,306,210,476.26
16	$ 1,412,239,232.56
17	$ 1,501,653,064.54
18	$ 1,584,578,387.22
19	$ 1,657,113,721.13
20	$ 1,732,575,054.53
21	$ 1,811,072,665.58
22	$ 1,892,720,815.74
23	$ 1,977,637,889.52
24	$ 2,065,946,538.98
25	$ 2,157,773,833.32
26	$ 2,256,325,849.94
27	$ 2,324,015,625.44
28	$ 2,393,736,094.20
29	$ 2,465,548,177.03
30	$ 2,539,514,622.34

DURATION OF THE PROPOSED ZONE

The proposed Zone has an anticipated life of thirty (30) years. If created, the City Ordinance creating the proposed Zone will also specify the termination date of the proposed Zone.

DISCLAIMER

The layout, density, unit mix, building configuration, and total number of residential units and commercial square footage described and/or depicted in this preliminary financing plan are conceptual in nature and may be subject to change. Final development plans may be modified based on market conditions, financing availability, economic feasibility, municipal review and approval processes, platting requirements, zoning and land use regulations, engineering and utility constraints, environmental considerations, infrastructure requirements, design refinements, and other governmental or agency requirements.

All figures, projections, site layouts, development assumptions, residential unit counts, and estimated commercial square footage are preliminary estimates prepared solely for planning and financing evaluation purposes. However, it is understood that the Developer will use its best efforts to complete the project as quickly as economically feasible and as close to this Preliminary Financing Plan as possible.

CONCLUSIONS

Based upon a set of conservative assumptions and an analysis of the Preliminary Financing Plan, the Preliminary Financing Plan for the Zone is economically feasible and in compliance with Chapter 311 of the Texas Tax Code.

If created, the success of the Project within the Zone will encourage other development and revitalization efforts within the City, leading to higher property values overall. Creation of the Zone will help accommodate the City's growing residential needs, while simultaneously supporting a stronger local retail base, create new employment opportunities, and attract additional private investment to the City. In addition, the proposed Zone will help stabilize and enhance future property values within the City.

(*Exhibit Page(s) Following*)

EXHIBITS
TIRZ REQUIREMENTS

Exhibit Number	Exhibit
1	Location Map
2	Financial Model and Information

EXHIBIT 1
Location Map

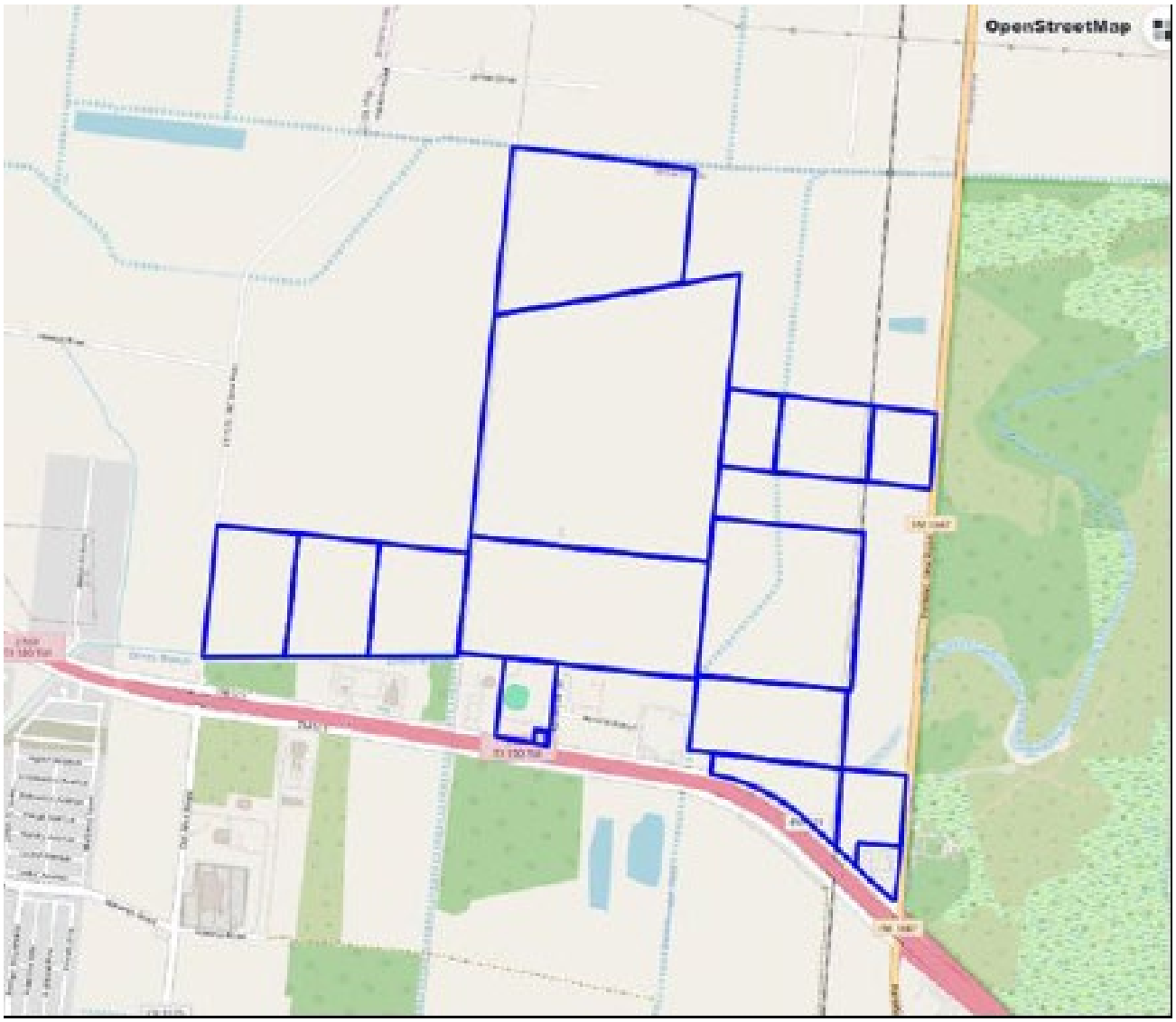

EXHIBIT 2
Financial Model and Information

Preliminary Financing Plan for Brownsville TIRZ No. 6

26 Year Estimated Build Out

Summary Fact Sheet

June 25, 2026

Site Area (in Acres)			=	1,021.48		**Total Sq. Ft. =**	44,495,686.22
2026 Base Value			= $	4,608,493.00			
							Projected Taxable Value
	Residential Units	**Entry 45'**		1,339	Units	$	397,683,000.00
		Move Up 55'		683	Units	$	252,710,000.00
		2nd Move Up 70'		452	Units	$	239,560,000.00
		SF Rental		369	Units	$	92,250,000.00
		Villas 35'		329	Units	$	90,475,000.00
		Totals		3,172	Units	$	1,072,678,000.00
	Apartments			430	Units	$	60,200,000.00
	Commercial			100,000	Square Feet	$	20,000,000.00
					TOTAL	$	1,152,878,000.00

Projected Taxable Value at Year 30		$	2,539,514,622.34
TIF Participation Rates:			
City of Brownsville	**50% of Tax Rate**	$	112,374,667.16
Cameron County	**50% of M&O Tax Rate**	$	62,802,964.21
	Total TIF Tax Pledge=	$	175,177,631.37
Collection Rate			97.00%
Est. Total TIRZ Revenues		$	169,922,302.43
Est. Infrastructure Costs		$	260,565,745.84
Formation and Administrative Costs		$	500,000.00
Total Project Costs		$	261,065,745.84
Surplus/(Deficit)		$	(91,143,443.41)
Additional Developer Contribution to Public Infrastructure		$	91,143,443.41
Est. TIRZ Term			30 Years

The projections and estimates contained in this Finance and Project Plan are subject to and may be impacted by market & economic conditions both domestic & international. Actual completion & construction of the Project may take more or less time than described herein. However it is understood that the Developer will use its best efforts to complete the project as quickly as economically feasible. A growth rate of 3.00% per year has been used to establish value of future tax base, year over year. PID bonds are anticipated and requested with debt service assessments being offset by TIRZ Revenues. Developer will work with City Staff and consultants in the sizing and timing of such issuance(s).

Preliminary Financing Plan for Brownsville TIRZ No. 6
PROJECT MAP - SUBJECT TO CHANGE

Note: Layout may change due to market conditions and platting and development requirements.

Area Item Description	TIRZ Public Infrastructure Cost	
Soft Costs and Contingency	$	49,084,893.31
Public Sewage, Storm, & Water	$	85,286,166.14
Public Landscape Improvements	$	7,422,918.96
Traffic and Street Improvements	$	55,863,242.32
Financing Costs	$	50,000,000.00
Public Structures & Common Areas	$	12,908,525.11
Total Cost of Development	$	260,565,745.84

Preliminary Estrella TIRZ Finance Plan

Estrella Allocated Land Uses and Values (Current Values)

TIF TAXABLE VALUES ONLY

Designation	Description	Category	Number	Avg Unit Value	Type Unit	Total Value
Entry	45' Lots	Single Family Lot	1,339	$59,400.00	Lot	$79,536,600.00
	Average Home Value	Single Family Home	1,339	$237,600.00	Home	$318,146,400.00
Move Up	55' Lots	Single Family Lot	683	$74,000.00	Lot	$50,542,000.00
	Average Home Value	Single Family Home	683	$296,000.00	Home	$202,168,000.00
2nd Move Up	70' Lots	Single Family Lot	452	$106,000.00	Lot	$47,912,000.00
	Average Home Value	Single Family Home	452	$424,000.00	Home	$191,648,000.00
Villas	35' Lots	Villa Lot	329	$55,000.00	Lot	$18,095,000.00
	Average Home Value	Villa Home	329	$220,000.00	Home	$72,380,000.00
SF Rental	SF Rental Lot	Rental Homes	369	$50,000.00	Lot	$18,450,000.00
	Average Home Value	Rental Homes	369	$200,000.00	Home	$73,800,000.00
Multifamily	Apartments	Apartment Units	430	$140,000.00	Doors	$60,200,000.00
Commercial	Commercial	Square Feet	100,000	$200.00		$20,000,000.00
Totals		**Total Residential Units**	**3,602**			**$1,152,878,000.00**

ESTRELLA TIRZ
PRELIMINARY FINANCE PLAN

ALL VALUES ARE ASSESSABLE AD VALOREM ASSUMPTIONS

Below Model Delayed One Year to Reflect Tax Rolls

		2026	2027	2028	2029	2030
Development Type	**Development Year ▸**	0	1	2	3	4
	Current Value					
45' Lots	$ 59,400.00	-	-			108
Added Value		$ -	$ -	$ -	$ -	$ 7,220,364.12
Average Home Value	$ 237,600.00	-	-			13
Added Value		$ -	$ -	$ -	$ -	$ 3,476,471.61
55' Lots	$ 74,000.00	-	-			72
Added Value		$ -	$ -	$ -	$ -	$ 5,996,710.94
Average Home Value	$ 296,000.00	-	-			32
Added Value		$ -	$ -	$ -	$ -	$ 10,660,819.45
70' Lots	$ 106,000.00	-	-			36
Added Value		$ -	$ -	$ -	$ -	$ 4,294,941.62
Average Home Value	$ 424,000.00	-	-			36
Added Value		$ -	$ -	$ -	$ -	$ 17,179,766.48
Villas 35' Lots	$ 55,000.00					
Added Value		$ -	$ -	$ -	$ -	$ -
Average Home Value	$ 220,000.00					
Added Value		$ -	$ -	$ -	$ -	$ -
SF Rental Lots	$ 50,000.00					
Added Value		$ -	$ -	$ -	$ -	$ -
Average Home Value	$ 200,000.00					
Added Value		$ -	$ -	$ -	$ -	$ -
Multifamily Units	$ 140,000.00	-				
Added Value		$ -	$ -	$ -	$ -	$ -
Commercial Square Feet	$ 200.00		5,000		20,000	
Added Value		$ -	$ 1,030,000.00	$ -	$ 4,370,908.00	$ -
Annual Added Value=		$ -	$ 1,030,000.00	$ -	$ 4,370,908.00	$ 41,608,710.10
Total Captured Value=		**$ -**	**$ 1,030,000.00**	**$ 1,060,900.00**	**$ 5,463,635.00**	**$ 47,236,254.15**
TAX INCREMENTS	Total Tax Rate					
Los Fresnos CISD	**$ 0.880272**		$ 9,066.80	$ 9,338.81	$ 48,094.85	$ 415,807.52
South Texas I.S.D.	**$ 0.049200**		$ 506.76	$ 521.96	$ 2,688.11	$ 23,240.24
City of Brownsville	**$ 0.603504**		$ 6,216.09	$ 6,402.57	$ 32,973.26	$ 285,072.68
Brownsville Navigation District	**$ 0.025718**		$ 264.90	$ 272.84	$ 1,405.14	$ 12,148.22
Cameron County	**$ 0.424393**		$ 4,371.25	$ 4,502.39	$ 23,187.28	$ 200,467.36
Drainage District #1	**$ 0.027416**		$ 282.38	$ 290.86	$ 1,497.91	$ 12,950.29
Texas Southmost College District	**$ 0.115117**		$ 1,185.71	$ 1,221.28	$ 6,289.57	$ 54,376.96
TOTAL ANNUAL TAX INCREMENT=	**$ 2.125620**		**$ 21,893.89**	**$ 22,550.70**	**$ 116,136.12**	**$ 1,004,063.27**
TIRZ PARTICIPATION						
City of Brownsville	**$ 0.301752**	**$ -**	**$ 3,108.05**	**$ 3,201.29**	**$ 16,486.63**	**$ 142,536.34**
Cameron County	**$ 0.168641**	**$ -**	**$ 1,737.00**	**$ 1,789.11**	**$ 9,213.90**	**$ 79,659.46**
	TIRZ REVENUE	**$ -**	**$ 4,845.04**	**$ 4,990.39**	**$ 25,700.53**	**$ 222,195.80**

2031	2032	2033	2034	2035	2036	2037	2038	2039
5	6	7	8	9	10	11	12	13
	108	108		108		108	108	
$ -	$ 7,660,084.29	$ 7,889,886.82	$ -	$ 8,370,380.93	$ -	$ 8,880,137.13	$ 9,146,541.24	$ -
60	60	60	60	60	60	60	60	60
$ 16,526,611.20	$ 17,022,409.54	$ 17,533,081.83	$ 18,059,074.28	$ 18,600,846.51	$ 19,158,871.90	$ 19,733,638.06	$ 20,325,647.20	$ 20,935,416.62
	72	72		72		72	72	72
$ -	$ 6,361,910.64	$ 6,552,767.95	$ -	$ 6,951,831.52	$ -	$ 7,375,198.06	$ 7,596,454.01	$ 7,824,347.63
48	48	48	48	48	48	48	48	48
$ 16,470,966.05	$ 16,965,095.03	$ 17,474,047.88	$ 17,998,269.32	$ 18,538,217.40	$ 19,094,363.92	$ 19,667,194.84	$ 20,257,210.68	$ 20,864,927.00
36	36	36	36	36	36	36	36	36
$ 4,423,789.87	$ 4,556,503.56	$ 4,693,198.67	$ 4,833,994.63	$ 4,979,014.47	$ 5,128,384.90	$ 5,282,236.45	$ 5,440,703.54	$ 5,603,924.65
36	36	36	36	36	36	36	36	36
$ 17,695,159.47	$ 18,226,014.25	$ 18,772,794.68	$ 19,335,978.52	$ 19,916,057.88	$ 20,513,539.61	$ 21,128,945.80	$ 21,762,814.18	$ 22,415,698.60
	90							
$ -	$ 5,910,558.87	$ -	$ -	$ -	$ -	$ -	$ -	$ -
	5	36	36	36	36	36	36	36
$ -	$ 1,313,457.53	$ 9,740,601.01	$ 10,032,819.04	$ 10,333,803.62	$ 10,643,817.72	$ 10,963,132.26	$ 11,292,026.22	$ 11,630,787.01
	90							
$ -	$ 5,373,235.33	$ -	$ -	$ -	$ -	$ -	$ -	$ -
	10	60	60	60	60	60	59	
$ -	$ 2,388,104.59	$ 14,758,486.39	$ 15,201,240.98	$ 15,657,278.21	$ 16,126,996.55	$ 16,610,806.45	$ 16,823,978.46	$ -
		215						215
$ -	$ -	$ 37,019,203.35	$ -	$ -	$ -	$ -	$ -	$ 44,202,864.77
20,000		20,000		20,000	-	-	15,000	
$ 4,637,096.30	$ -	$ 4,919,495.46	$ -	$ 5,219,092.74	$ -	$ -	$ 4,277,282.66	$ -
$ 59,753,622.89	$ 78,117,289.34	$ 131,463,677.22	$ 85,461,376.77	$ 100,196,142.33	$ 90,665,974.62	$ 100,761,151.92	$ 107,776,116.96	$ 133,477,966.28
$ 108,406,964.66	**$ 189,776,462.94**	**$ 326,933,434.05**	**$ 422,202,813.84**	**$ 535,065,040.59**	**$ 641,782,966.42**	**$ 761,797,607.33**	**$ 892,427,652.51**	**$ 1,052,678,448.37**
$ 954,276.16	$ 1,670,549.07	$ 2,877,903.48	$ 3,716,533.15	$ 4,710,027.73	$ 5,649,435.75	$ 6,705,891.03	$ 7,855,790.75	$ 9,266,433.63
$ 53,336.23	$ 93,370.02	$ 160,851.25	$ 207,723.78	$ 263,252.00	$ 315,757.22	$ 374,804.42	$ 439,074.41	$ 517,917.80
$ 654,240.37	$ 1,145,308.54	$ 1,973,056.35	$ 2,548,010.87	$ 3,229,138.92	$ 3,873,185.87	$ 4,597,479.03	$ 5,385,836.58	$ 6,352,956.54
$ 27,880.10	$ 48,806.71	$ 84,080.74	$ 108,582.12	$ 137,608.03	$ 165,053.74	$ 195,919.11	$ 229,514.54	$ 270,727.84
$ 460,071.57	$ 805,398.02	$ 1,387,482.61	$ 1,791,799.19	$ 2,270,778.58	$ 2,723,681.98	$ 3,233,015.72	$ 3,787,400.49	$ 4,467,493.65
$ 29,720.85	$ 52,029.12	$ 89,632.07	$ 115,751.12	$ 146,693.43	$ 175,951.22	$ 208,854.43	$ 244,667.97	$ 288,602.32
$ 124,794.85	$ 218,464.97	$ 376,355.96	$ 486,027.21	$ 615,950.82	$ 738,801.30	$ 876,958.55	$ 1,027,335.94	$ 1,211,811.85
$ 2,304,320.12	**$ 4,033,926.45**	**$ 6,949,362.46**	**$ 8,974,427.45**	**$ 11,373,449.52**	**$ 13,641,867.09**	**$ 16,192,922.30**	**$ 18,969,620.67**	**$ 22,375,943.63**
$ 327,120.18	**$ 572,654.27**	**$ 986,528.18**	**$ 1,274,005.43**	**$ 1,614,569.46**	**$ 1,936,592.94**	**$ 2,298,739.52**	**$ 2,692,918.29**	**$ 3,176,478.27**
$ 182,818.05	**$ 320,039.98**	**$ 551,342.18**	**$ 712,004.94**	**$ 902,336.36**	**$ 1,082,306.00**	**$ 1,284,699.29**	**$ 1,504,994.46**	**$ 1,775,242.20**
$ 509,938.23	**$ 892,694.25**	**$ 1,537,870.35**	**$ 1,986,010.37**	**$ 2,516,905.82**	**$ 3,018,898.94**	**$ 3,583,438.81**	**$ 4,197,912.75**	**$ 4,951,720.47**

2040	2041	2042	2043	2044	2045	2046	2047
14	15	16	17	18	19	20	21
108		108	108		108		108
$ 9,703,565.60	$ -	$ 10,294,512.75	$ 10,603,348.13	$ -	$ 11,249,092.03	$ -	$ 11,934,161.74
60	60	60	60	60	60	60	60
$ 21,563,479.12	$ 22,210,383.49	$ 22,876,695.00	$ 23,562,995.85	$ 24,269,885.72	$ 24,997,982.29	$ 25,747,921.76	$ 26,520,359.41
72	72	35					
$ 8,059,078.05	$ 8,300,850.40	$ 4,156,189.68	$ -	$ -	$ -	$ -	$ -
48	48	48	48	27			
$ 21,490,874.81	$ 22,135,601.06	$ 22,799,669.09	$ 23,483,659.16	$ 13,605,845.03	$ -	$ -	$ -
36	36	20					
$ 5,772,042.39	$ 5,945,203.66	$ 3,401,977.65	$ -	$ -	$ -	$ -	$ -
36	36	20					
$ 23,088,169.56	$ 23,780,814.65	$ 13,607,910.60	$ -	$ -	$ -	$ -	$ -
$ -	$ -	$ -	$ -	$ -	$ -	$ -	$ -
36	36						
$ 11,979,710.62	$ 12,339,101.94	$ -	$ -	$ -	$ -	$ -	$ -
$ -	$ -	$ -	$ -	$ -	$ -	$ -	$ -
$ -	$ -	$ -	$ -	$ -	$ -	$ -	$ -
$ -	$ -	$ -	$ -	$ -	$ -	$ -	$ -
$ -	$ -	$ -	$ -	$ -	$ -	$ -	$ -
$ 91,953,354.55	$ 94,711,955.19	$ 66,842,442.01	$ 47,046,655.00	$ 37,875,730.75	$ 24,997,982.29	$ 25,747,921.76	$ 26,520,359.41
$ 1,176,212,156.38	**$ 1,306,210,476.26**	**$ 1,412,239,232.56**	**$ 1,501,653,064.54**	**$ 1,584,578,387.22**	**$ 1,657,113,721.13**	**$ 1,732,575,054.53**	**$ 1,811,072,665.58**
$ 10,353,866.27	$ 11,498,205.08	$ 12,431,546.54	$ 13,218,631.46	$ 13,948,599.86	$ 14,587,108.10	$ 15,251,373.08	$ 15,942,365.57
$ 578,696.38	$ 642,655.55	$ 694,821.70	$ 738,813.31	$ 779,612.57	$ 815,299.95	$ 852,426.93	$ 891,047.75
$ 7,098,487.41	$ 7,883,032.47	$ 8,522,920.26	$ 9,062,536.31	$ 9,562,993.95	$ 10,000,747.59	$ 10,456,159.76	$ 10,929,895.98
$ 302,498.24	$ 335,931.21	$ 363,199.69	$ 386,195.14	$ 407,521.87	$ 426,176.51	$ 445,583.65	$ 465,771.67
$ 4,991,762.06	$ 5,543,465.83	$ 5,993,444.45	$ 6,372,910.49	$ 6,724,839.75	$ 7,032,674.63	$ 7,352,927.25	$ 7,686,065.62
$ 322,470.32	$ 358,110.66	$ 387,179.51	$ 411,693.20	$ 434,428.01	$ 454,314.30	$ 475,002.78	$ 496,523.68
$ 1,354,020.15	$ 1,503,670.31	$ 1,625,727.44	$ 1,728,657.96	$ 1,824,119.10	$ 1,907,619.60	$ 1,994,488.43	$ 2,084,852.52
$ 25,001,800.84	**$ 27,765,071.13**	**$ 30,018,839.58**	**$ 31,919,437.87**	**$ 33,682,115.11**	**$ 35,223,940.68**	**$ 36,827,961.87**	**$ 38,496,522.79**
$ 3,549,243.71	**$ 3,941,516.24**	**$ 4,261,460.13**	**$ 4,531,268.16**	**$ 4,781,496.98**	**$ 5,000,373.80**	**$ 5,228,079.88**	**$ 5,464,947.99**
$ 1,983,570.06	**$ 2,202,799.88**	**$ 2,381,607.30**	**$ 2,532,395.24**	**$ 2,672,240.92**	**$ 2,794,564.86**	**$ 2,921,823.23**	**$ 3,054,202.00**
$ 5,532,813.77	**$ 6,144,316.11**	**$ 6,643,067.43**	**$ 7,063,663.39**	**$ 7,453,737.89**	**$ 7,794,938.66**	**$ 8,149,903.11**	**$ 8,519,149.99**

2048	2049	2050	2051	2052	2053	2054	2055
22	23	24	25	26	27	28	29
		151	-			-	
$ -	$ -	$ 18,232,943.46	$ -	$ -	$ -	$ -	
60	60	60	60	66			
$ 27,315,970.20	$ 28,135,449.30	$ 28,979,512.78	$ 29,848,898.17	$ 33,818,801.62	$ -	$ -	
$ -	$ -	$ -	$ -	$ -	$ -	$ -	
$ -	$ -	$ -	$ -	$ -	$ -	$ -	
$ -	$ -	$ -	$ -	$ -	$ -	$ -	
$ -	$ -	$ -	$ -	$ -	$ -	$ -	
$ -	$ -	$ -	$ -	$ -	$ -	$ -	
$ -	$ -	$ -	$ -	$ -	$ -	$ -	
$ -	$ -	$ -	$ -	$ -	$ -	$ -	
$ -	$ -	$ -	$ -	$ -	$ -	$ -	
$ -	$ -	$ -	$ -	$ -	$ -	$ -	
$ 27,315,970.20	$ 28,135,449.30	$ 28,979,512.78	$ 29,848,898.17	$ 33,818,801.62	$ -	$ -	
$ 1,892,720,815.74	**$ 1,977,637,889.52**	**$ 2,065,946,538.98**	**$ 2,157,773,833.32**	**$ 2,256,325,849.94**	**$ 2,324,015,625.44**	**$ 2,393,736,094.20**	**$ 2,465,548,177.03**
$ 16,661,091.38	$ 17,408,592.60	$ 18,185,948.92	$ 18,994,278.88	$ 19,861,804.69	$ 20,457,658.83	$ 21,071,388.59	$ 21,703,530.25
$ 931,218.64	$ 972,997.84	$ 1,016,445.70	$ 1,061,624.73	$ 1,110,112.32	$ 1,143,415.69	$ 1,177,718.16	$ 1,213,049.70
$ 11,422,645.83	$ 11,935,123.77	$ 12,468,070.00	$ 13,022,251.40	$ 13,617,016.76	$ 14,025,527.26	$ 14,446,293.08	$ 14,879,681.87
$ 486,769.94	$ 508,608.91	$ 531,320.13	$ 554,936.27	$ 580,281.88	$ 597,690.34	$ 615,621.05	$ 634,089.68
$ 8,032,574.65	$ 8,392,956.77	$ 8,767,732.50	$ 9,157,441.10	$ 9,575,688.96	$ 9,862,959.63	$ 10,158,848.42	$ 10,463,613.87
$ 518,908.34	$ 542,189.20	$ 566,399.90	$ 591,575.27	$ 618,594.30	$ 637,152.12	$ 656,266.69	$ 675,954.69
$ 2,178,843.42	$ 2,276,597.41	$ 2,378,255.68	$ 2,483,964.50	$ 2,597,414.63	$ 2,675,337.07	$ 2,755,597.18	$ 2,838,265.09
$ 40,232,052.20	**$ 42,037,066.51**	**$ 43,914,172.82**	**$ 45,866,072.16**	**$ 47,960,913.53**	**$ 49,399,740.94**	**$ 50,881,733.17**	**$ 52,408,185.16**
$ 5,711,322.92	**$ 5,967,561.88**	**$ 6,234,035.00**	**$ 6,511,125.70**	**$ 6,808,508.38**	**$ 7,012,763.63**	**$ 7,223,146.54**	**$ 7,439,840.94**
$ 3,191,893.85	**$ 3,335,098.43**	**$ 3,484,022.57**	**$ 3,638,880.58**	**$ 3,805,079.19**	**$ 3,919,231.57**	**$ 4,036,808.52**	**$ 4,157,912.77**
$ 8,903,216.76	**$ 9,302,660.31**	**$ 9,718,057.57**	**$ 10,150,006.28**	**$ 10,613,587.57**	**$ 10,931,995.20**	**$ 11,259,955.06**	**$ 11,597,753.71**

2056	
30	**TOTALS**
-	1,339
$ -	$ 121,185,018.24
	1,339
$ -	$ 511,220,403.46
	683
$ -	$ 69,175,338.87
	683
$ -	$ 281,506,760.69
	452
$ -	$ 64,355,916.07
	452
$ -	$ 257,423,664.29
	90
$ -	$ 5,910,558.87
	329
$ -	$ 100,269,256.98
	90
$ -	$ 5,373,235.33
	369
$ -	$ 97,566,891.63
	430
$ -	$ 81,222,068.12
	100,000
$ -	$ 24,453,875.15
$ -	
$ 2,539,514,622.34	**$ 2,539,514,622.34**
$ 22,354,636.16	**$ 327,819,774.99**
$ 1,249,441.19	**$ 18,322,442.30**
$ 15,326,072.33	**$ 224,749,333.71**
$ 653,112.37	**$ 9,577,572.58**
$ 10,777,522.29	**$ 158,047,078.36**
$ 696,233.33	**$ 10,209,920.29**
$ 2,923,413.05	**$ 42,870,418.50**
$ 53,980,430.72	**$ 791,596,540.74**
$ 7,663,036.16	**$ 112,374,667.16**
$ 4,282,650.16	**$ 62,802,964.21**
$ 11,945,686.32	**$ 175,177,631.37**

Reinvestment Zone No. 6, City of Brownsville - Property Ownership

Information from Cameron CAD - Properties in Zone

Tract	Property ID	GEO ID	Property Owner	Legal Acreage	Appraised Value	Taxable Value
TRACT # 1						
	169988	79-2220-0100-0000-00	ML RHODES, LLC	124.8000	$ 120,108.00	$ 120,108.00
			Totals =	**124.8000**	**$ 120,108.00**	**$ 120,108.00**
TRACT # 2						
	169983	79-2220-0090-0100-00	ML RHODES, LLC	300.0000	$ 360,000.00	$ 360,000.00
			Totals =	**300.0000**	**$ 360,000.00**	**$ 360,000.00**
TRACT # 3						
	169968	79-2220-0060-0200-00	ML RHODES, LLC	21.3000	$ 217,260.00	$ 217,260.00
			Totals =	**21.3000**	**$ 217,260.00**	**$ 217,260.00**
TRACT # 4						
	169969	79-2220-0060-0200-01	ML RHODES, LLC	31.4520	$ 188,712.00	$ 188,712.00
			Totals =	**31.4520**	**$ 188,712.00**	**$ 188,712.00**
TRACT # 5						
	450516	79-2220-0060-0201-00	ML RHODES, LLC	24.3080	$ 399,624.00	$ 399,624.00
			Totals =	**24.3080**	**$ 399,624.00**	**$ 399,624.00**
TRACT # 6						
	169970	79-2220-0060-0300-00	ML RHODES, LLC	116.1100	$ 696,660.00	$ 696,660.00
			Totals =	**116.1100**	**$ 696,660.00**	**$ 696,660.00**
TRACT # 7						
	169982	79-2220-0080-0000-00	ML RHODES, LLC	134.7500	$ 269,500.00	$ 269,500.00
			Totals =	**134.7500**	**$ 269,500.00**	**$ 269,500.00**
TRACT #8						
	153529	77-9980-0310-0000-00	ML RHODES, LLC	42.5650	$ 85,130.00	$ 85,130.00
			Totals =	42.5650	**$ 85,130.00**	**$ 85,130.00**
TRACT #9						
	153517	77-9980-0170-0000-00	ML RHODES, LLC	47.2482	$ 84,883.00	$ 84,883.00
			Totals =	47.2482	**$ 84,883.00**	**$ 84,883.00**
TRACT # 10						
	153497	77-9980-0030-0000-00	ML RHODES, LLC	47.2482	$ 94,496.00	$ 94,496.00
			Totals =	**47.2482**	**$ 94,496.00**	**$ 94,496.00**
TRACT # 11						
.	450405	79-2220-0060-0506-00	ML RHODES, LLC	24.0330	$ 144,198.00	$ 144,198.00
			Totals =	**24.0330**	**$ 144,198.00**	**$ 144,198.00**
TRACT # 12						
	452842	79-2220-0060-0507-00	ML RHODES, LLC	23.0390	$ 423,796.00	$ 423,796.00
			Totals =	23.0390	**$ 423,796.00**	**$ 423,796.00**
TRACT # 13						
	169990	79-2220-0110-0010-00	FORSHAGE LAND INVESTMENTS, INC.	54.0950	$ 523,100.00	$ 523,100.00
			Totals =	**54.0950**	**$ 523,100.00**	**$ 523,100.00**
TRACT # 14						
	415517	79-2220-0060-0600-00	FORSHAGE LAND INVESTMENTS, INC.	1.6050	$ 72,487.00	$ 72,487.00
			Totals =	**1.6050**	**$ 72,487.00**	**$ 72,487.00**
TRACT # 15						
	454705	79-2275-0000-0010-00	SAN MANUEL PROPERTIES, LLC	8.0000	$ 928,539.00	$ 928,539.00
			Totals =	**8.0000**	**$ 928,539.00**	**$ 928,539.00**
TRACT # 16						
.	169496	79-2210-0070-0011-00	CITY OF BROWNSVILLE	1.0000	$ 26,136.00	$ -
			Totals =	**1.0000**	**$ 26,136.00**	**$ -**
TRACT # 17						
	169497	79-2210-0070-0011-10	CITY OF BROWNSVILLE	19.9270	$ 255,715.00	$ -
			Totals =	19.9270	**$ 255,715.00**	**$ -**

TOTAL ACREAGE = $ 1,021.48

TOTAL APPRAISED VALUE= $ 4,890,344.00

TOTAL BASE VALUE = $ 4,608,493.00

PERCENTAGE OWNERSHIP BY PETITIONERS

OWNER OF RECORD	Percentage (Acreage)	Appraised Value	Taxable Value
ML RHODES, LLC	91.7153%	63.0706%	66.9279%
FORSHAGE LAND INVESTMENTS, INC.	5.4529%	12.1788%	12.9237%
SAN MANUEL PROPERTIES, LLC	0.7832%	18.9872%	20.1484%
CITY OF BROWNSVILLE	2.0487%	5.7634%	0.0000%
Totals =	**100.0000%**	**100.0000%**	**100.0000%**

Sources of Revenue Reinvestment Zone No. 6, City of Brownsville			
	Tax Revenue		
Year	City	County	TOTAL
0	$ -	$ -	$ -
1	$ 3,108.05	$ 1,737.00	$ 4,845.04
2	$ 3,201.29	$ 1,789.11	$ 4,990.39
3	$ 16,486.63	$ 9,213.90	$ 25,700.53
4	$ 142,536.34	$ 79,659.46	$ 222,195.80
5	$ 327,120.18	$ 182,818.05	$ 509,938.23
6	$ 572,654.27	$ 320,039.98	$ 892,694.25
7	$ 986,528.18	$ 551,342.18	$ 1,537,870.35
8	$ 1,274,005.43	$ 712,004.94	$ 1,986,010.37
9	$ 1,614,569.46	$ 902,336.36	$ 2,516,905.82
10	$ 1,936,592.94	$ 1,082,306.00	$ 3,018,898.94
11	$ 2,298,739.52	$ 1,284,699.29	$ 3,583,438.81
12	$ 2,692,918.29	$ 1,504,994.46	$ 4,197,912.75
13	$ 3,176,478.27	$ 1,775,242.20	$ 4,951,720.47
14	$ 3,549,243.71	$ 1,983,570.06	$ 5,532,813.77
15	$ 3,941,516.24	$ 2,202,799.88	$ 6,144,316.11
16	$ 4,261,460.13	$ 2,381,607.30	$ 6,643,067.43
17	$ 4,531,268.16	$ 2,532,395.24	$ 7,063,663.39
18	$ 4,781,496.98	$ 2,672,240.92	$ 7,453,737.89
19	$ 5,000,373.80	$ 2,794,564.86	$ 7,794,938.66
20	$ 5,228,079.88	$ 2,921,823.23	$ 8,149,903.11
21	$ 5,464,947.99	$ 3,054,202.00	$ 8,519,149.99
22	$ 5,711,322.92	$ 3,191,893.85	$ 8,903,216.76
23	$ 5,967,561.88	$ 3,335,098.43	$ 9,302,660.31
24	$ 6,234,035.00	$ 3,484,022.57	$ 9,718,057.57
25	$ 6,511,125.70	$ 3,638,880.58	$ 10,150,006.28
26	$ 6,808,508.38	$ 3,805,079.19	$ 10,613,587.57
27	$ 7,012,763.63	$ 3,919,231.57	$ 10,931,995.20
28	$ 7,223,146.54	$ 4,036,808.52	$ 11,259,955.06
29	$ 7,439,840.94	$ 4,157,912.77	$ 11,597,753.71
30	$ 7,663,036.16	$ 4,282,650.16	$ 11,945,686.32
Totals:	$ 112,374,667.16	$ 62,802,964.21	**$ 175,177,631.37**

Estimated Captured Appraised Value (Cumulative)	
Year	**Value**
0	$ -
1	$ 1,030,000.00
2	$ 1,060,900.00
3	$ 5,463,635.00
4	$ 47,236,254.15
5	$ 108,406,964.66
6	$ 189,776,462.94
7	$ 326,933,434.05
8	$ 422,202,813.84
9	$ 535,065,040.59
10	$ 641,782,966.42
11	$ 761,797,607.33
12	$ 892,427,652.51
13	$ 1,052,678,448.37
14	$ 1,176,212,156.38
15	$ 1,306,210,476.26
16	$ 1,412,239,232.56
17	$ 1,501,653,064.54
18	$ 1,584,578,387.22
19	$ 1,657,113,721.13
20	$ 1,732,575,054.53
21	$ 1,811,072,665.58
22	$ 1,892,720,815.74
23	$ 1,977,637,889.52
24	$ 2,065,946,538.98
25	$ 2,157,773,833.32
26	$ 2,256,325,849.94
27	$ 2,324,015,625.44
28	$ 2,393,736,094.20
29	$ 2,465,548,177.03
30	$ 2,539,514,622.34

To:	Mayor and City Commission
Through:	Alan Guard, Interim City Manager
From:	Will Trevino, City Attorney
Date:	Tuesday, July 21, 2026
Agenda #:	Consideration and **APPROVAL** on **SECOND** and **FINAL READING** on **Ordinance Number 2026-1810** designating a +/- 804.13 acre area located in Cameron County, Texas, as a tax increment reinvestment zone; describing the boundaries of the zone; creating a board of directors for the zone; providing for an effective date and a termination date for the zone; naming the zone the "Greater Brownsville Tech District Reinvestment Zone Number Five, City of Brownsville"; establishing a tax increment fund; and containing other findings and provisions related thereto. (City Manager's Office)

Summary:

On June 5, 2026, the City of Brownsville, Texas (the "City") received a petition submitted by the Greater Brownsville Economic Development Corporation (the "Petitioner") under TEX. TAX CODE § 311.005(a)(4) (the "Petition"), requesting, among other things, that the City Commission (the "Commission") designate and create a tax increment reinvestment zone ("TIRZ" or "Zone") in accordance with Chapter 311, Texas Tax Code ("Chapter 311"). The Petition was accepted on June 2, 2026, and a public hearing was called for July 7, 2026. A copy of the petition was filed with the City Secretary on the above date and seeks the designation of a TIRZ on approximately 804.13 acres of property located in the City's corporate boundaries, with such property being as more particularly described in Exhibit "A" of the resolution (the "Property").

The attached ordinance designates a +/- 804.13 acre area located in Cameron County, Texas, as a tax increment reinvestment zone; describes the boundaries of the zone; creates a board of directors for the zone; provides for an effective date and a termination date for the zone; names the zone the "Greater Brownsville Tech District Reinvestment Zone Number Five, City of Brownsville"; establishes a tax increment fund; and contains other findings and provisions related thereto.

Project Scope and Analysis:

Funding:

Source: Not Applicable

Amount:

Local Contribution if Applicable:

Recommendation:

Staff recommends adoption.

Commission Pillar:

Economic Development, Planning & Zoning, Infrastructure, Public Safety, Quality of Life & Vibrancy, Governance

Attachments:

1. TIRZ No. 5 Creation Ordinance 7.2.26

ORDINANCE NO. _____

AN ORDINANCE OF THE CITY COMMISSION OF THE CITY OF BROWNSVILLE, TEXAS, DESIGNATING A +/- 804.13 ACRE AREA LOCATED IN CAMERON COUNTY, TEXAS, AS A TAX INCREMENT REINVESTMENT ZONE; DESCRIBING THE BOUNDARIES OF THE ZONE; CREATING A BOARD OF DIRECTORS FOR THE ZONE; PROVIDING FOR AN EFFECTIVE DATE AND A TERMINATION DATE FOR THE ZONE; NAMING THE ZONE "REINVESTMENT ZONE NUMBER FIVE, CITY OF BROWNSVILLE"; ESTABLISHING A TAX INCREMENT FUND; AND CONTAINING OTHER FINDINGS AND PROVISIONS RELATED THERETO.

WHEREAS, tax increment financing is an economic and community development tool authorized by the Tax Increment Financing Act, Texas Tax Code, Chapter 311 ("the Act"), used to promote development or redevelopment in areas where development or redevelopment would not occur solely through private investment in the reasonably foreseeable future; and

WHEREAS, the City Commission of the City of Brownsville, Texas (the "Commission") desires to support economic development and enable the construction of public improvements and infrastructure, to be funded in whole or in part through the through tax increment financing pursuant to the provisions of the Act; and

WHEREAS, the City of Brownsville, Texas ("City") received a petition dated June 8, 2026, submitted by the Greater Brownsville Economic Development Corporation, a Texas non-profit corporation (f/k/a the Greater Brownsville Incentives Corporation) (hereinafter the "Developer"), requesting the designation and creation of a tax increment reinvestment zone over certain real property in accordance with and pursuant to TEX. TAX CODE § 311.005(a)(4) (the "Petition"); and

WHEREAS, pursuant to TEX. TAX CODE § 311.003, the City may designate a contiguous or noncontiguous geographic area within the corporate limits or extraterritorial jurisdiction of the City to be a reinvestment zone if the area satisfies certain requirements of the Act; and

WHEREAS, the area described in the Petition consists of approximately **804.13 acres** of real property located entirely in the corporate limits of the City and in Cameron County, Texas, with such property being as more particularly described in **Exhibit A**, attached hereto and incorporated herein (the "Property").

WHEREAS, Developer intends to develop a high quality, master planned industrial park on the Property (the "Project"), as generally depicted in the site plan of the Project attached hereto as **Exhibit B**; and

WHEREAS, the Property is coterminous with the boundaries of the proposed Reinvestment Zone Number Five, City of Brownsville (the "TIRZ" or "Zone") and is predominantly open and undeveloped and, because of the need for site improvements and public infrastructure, or other factors, substantially impairs or arrests the sound growth of the City; and

WHEREAS, the City examined the Petition and found that there is a demonstrated need for development of the Property that would significantly benefit from designation of the Zone by the City in accordance with the Act, enhance the value of the real property in the Zone and be of general benefit to the City; and

WHEREAS, the public improvements and related services to be provided within the Zone are those set forth in the preliminary financing plan for the Zone attached hereto as **Exhibit C**, prepared in accordance with Section 311.003 of the Act (the "Preliminary Financing Plan"); and

WHEREAS, pursuant to the Act, the City held a public hearing on **July 7, 2026**, regarding the creation of the Zone and its benefits to the City and Property at which interested persons were provided an opportunity to speak for or against the creation of the Reinvestment Zone, its boundaries, and/or the concept of tax increment financing. Notice of the above-referenced public hearing was published in a newspaper of general circulation within the City not later than seven (7) days before the date of the hearing; and

WHEREAS, the designation of the proposed Zone under the Act does not financially obligate the City; and

WHEREAS, Developer recognizes that there is no guarantee that the value of the Property in the proposed TIRZ will increase, that any increases in value are dependent upon many factors which are not within the City's control, and that there is no guarantee of any tax increment, as that term is defined in the Act; and

WHEREAS, the proposed TIRZ is statutorily eligible to be designated in accordance with the Act and shall take effect immediately upon passage of this Ordinance; and

WHEREAS, it is hereby found and determined that the meeting at which this Ordinance was passed was open to the public, and public notice of the time, place, and purpose of said meeting was given, all as required by Open Meetings Act, Chapter 551, Texas Government Code.

NOW, THEREFORE, BE IT ORDAINED BY THE CITY COMMISION OF THE CITY OF BROWNSVILLE, TEXAS, THAT:

SECTION 1. FINDINGS. The City hereby finds and declares in accordance with the Act that:

(a) The improvements in the Zone will significantly enhance the value of all the taxable real property in the Zone and will be of general benefit to the City and Property within the Zone;

(b) The Zone area meets the requirements of Section 311.005 of the Act;

(c) The Zone is being designated under Section 311.005(a)(4) of the Act, being that the Zone area is "an area described in a petition requesting that the area be designated as a reinvestment zone, if the petition is submitted to the governing body of the municipality or county by the owners of property constituting at least fifty (50%) percent of the appraised value of the property in the area according to the most recent certified appraisal roll for the county in which the area is located." TEX. TAX CODE § 311.005(a)(4);

(d) The proposed Zone is located wholly within the City's corporate boundaries and Cameron County, Texas; and

(e) The proposed Zone will promote development of the area to be included therein, which would not occur solely through private investment in the reasonably foreseeable future, and will greatly assist in the construction of necessary public improvements and promote economic growth within the City.

SECTION 2. DESIGNATING THE AREA AS A REINVESTMENT ZONE. The Property described and depicted in **Exhibit A** and **Exhibit B** attached hereto, and officially assigned the name as designated in Section 6 below, is hereby designated as a tax increment reinvestment zone pursuant to the Act, and is so designated in accordance with and pursuant to TEX. TAX CODE 311.005(a)(4).

SECTION 3. DESCRIPTION OF THE ZONE BOUNDARIES. The Zone area shall consist of approximately 804.13 acres, with the Zone boundaries being coterminous with the Property and as more particularly described in **Exhibit A** and **Exhibit B** attached hereto and incorporated herein by reference.

SECTION 4. CREATION AND COMPOSITION OF A BOARD OF DIRECTORS FOR THE ZONE AND AUTHORITY OF BOARD. There is hereby created a Board of Directors (the "Board") for the Zone, with all the rights, powers, and duties as provided by the Act. Pursuant to TEX. TAX CODE §§ 311.009(b) and 311.009(e)(2), the Board shall consist of **nine (9) members** and have the following composition:

a) *Members One through Six*. By this Ordinance, six members of the Board are appointed by the City of Brownsville, Texas, satisfying the requirements of TEX. TAX CODE § 311.009(e)(2), which said members for the purpose of establishing the initial Board shall be:

1. Ben Peña (hereby designated as initial Presiding Officer/Chair);
2. Geraldo Gonzalez;
3. Francisco Orozco;
4. Anna Oquin;
5. Joe Hinojosa; and
6. Antonio M. Bernus.

b) Member Seven. The seventh member of the Board shall be designated by the Cameron County Commissioners Court as a participating taxing entity pursuant to and in accordance with TEX. TAX CODE § 311.009(b).

c) *Members Eight through Nine*. The eighth member of the Board shall be the member of the State Senate in whose district the Zone is located, or their designee, pursuant to TEX. TAX CODE § 311.009(b). The ninth member of the Board shall be the member of the State House of Representatives in whose district the Zone is located, or their designee, pursuant to TEX. TAX CODE § 311.009(b).

The term of each initial director shall be for a term of two (2) years. The term of each subsequent director shall be two (2) years. Vacancies shall be filled for the remainder of the unexpired term, by appointment made by the governing body that appointed the director who served in the vacated position.

The City shall annually appoint a member of the Board to serve as Chairman of the Board for a one-year term. The Board may elect a vice-chairman to serve in the absence of the chairman, and other officers as it deems appropriate.

The Board may hold its meetings at any place within the City as the Board may from time to time determine; provided that, in the absence of any such determination by the Board, the meetings shall be held at the place of regular business and public meetings for the City Commission of the City of Brownsville, Texas. The Board shall conduct its meetings in accordance with the requirements of the Act and such other applicable requirements of Texas law, including the Open Meetings Act, Chapter 551, Texas Government Code. Regular meetings of the Board shall be held at such times and places as shall be designated, from time to time, by resolution of the Board. Notice of regular meetings need not be given to each of the Directors but public notice of each meeting shall be given in the manner as may be required by law. Special meetings of the Board shall be held whenever called by the chairman, the vice-chairman in the absence of the chairman, or upon advice of or request by the City. A majority of the directors fixed by this Ordinance shall constitute a quorum for Board meetings. The act of a majority of the directors present at a meeting at which a quorum is in attendance shall constitute the act of the Board, unless the act of a greater number is required by law.

The Board shall make recommendations to the City concerning the administration of the Zone. The Board shall prepare and adopt a project plan and financing plan for the Zone and must submit such plans to the City for its final approval. The Board shall possess all powers necessary to prepare, monitor, and administer such project plan and financing plan for the Zone as set forth in the project plan, financing plan and Development Agreement (as defined below) (hereafter collectively the "Governing Documents"). The Board shall have the power to enter into agreements for the acquisition of professional services relating to accounting and auditing functions required for administration the Zone. Additionally, and specifically, pursuant to TEX. TAX CODE § 311.010(b), the Board and City may enter into agreements as the Board or City considers necessary or convenient to implement the project plan and reinvestment zone financing plan and achieve their purposes. Further, and in accordance with TEX. TAX CODE § 311.010(b), the Board and City may enter into agreement(s), which during its term, dedicates, pledges, or otherwise provides for the use of revenue in the tax increment fund to pay any project costs that benefit the Zone.

The Board shall have the power to review reimbursement requests submitted by the Developer and the City and shall approve payment of said reimbursements provided all of the prerequisites for approving the reimbursement as set forth in the Governing Documents have been complied with. All actions of the Board in administering the Zone must be carried out pursuant to the policies and procedures established by the Board, and must be in compliance with the Governing Documents, the Act, and any other applicable laws. The Board shall submit an annual report on the status of the Zone to the City no later than thirty (30) days prior to the end of the City's fiscal year. The Board may not undertake any of the projects set forth in the project plan or financing plan for the Zone in place of the Developer or the City without prior written authorization of the City to do so. Any powers not herein specifically delegated to the Board or already granted to the Board by virtue of the provisions of the Act are specifically reserved to the City and the Board shall not have any rights of the City with respect to the Zone unless specifically delegated herein or by the City pursuant to a subsequent ordinance.

SECTION 5. EFFECTIVE DATE AND TERMINATION DATE OF THE ZONE. The Zone shall take effect immediately upon passage of this Ordinance (the "Effective Date"). The term of the Zone shall be for a period of thirty (30) years, beginning on the earlier of: (i) the Effective Date; or (ii) the date of approval of the "Development Agreement," being that certain agreement between the City, the Zone, and the Greater Brownsville Economic Development Corporation, or such other related entity developing the Property, (the "Term"), unless otherwise terminated earlier as a result of: (i) payment in full of all project costs, tax increment bonds or notes, if any, including interest on said bonds or notes; (ii) any termination of the Development Agreement as a result of the default of the Developer thereunder according to the terms of the Development Agreement, it being acknowledged that any such termination of the Development Agreement will result in the termination of the Zone, or (iii) as otherwise permitted by law.

SECTION 6. ASSIGNING A NAME TO THE ZONE. The Zone created hereby is assigned the name of "REINVESTMENT ZONE NUMBER FIVE, CITY OF BROWNSVILLE."

SECTION 7. TAX INCREMENT BASE. The Tax Increment Base for the Zone is the total appraised value of all real property both within the Zone and taxable by the City, as determined as of January 1, 2026, or such other year for which the most recent certified tax roll is available at the time and date on which Zone was designated as a Tax Increment Reinvestment Zone (the "Tax Increment Base").

SECTION 8. LIMITATION OF TAX INCREMENT AND ESTABLISHMENT OF A TAX INCREMENT FUND. There is hereby created and established in the depository bank of the City, a fund to be called the "REINVESTMENT ZONE NUMBER FIVE, CITY OF BROWNSVILLE, TAX INCREMENT FUND" (herein called the "Tax Increment Fund").

The Tax Increment Fund may be divided into additional accounts and sub-accounts authorized by further resolution or ordinance of the City Commission.

The Tax Increment Fund shall consist of, and there shall be deposited therein: (i) the percentage of the "tax increment," as defined by TEX. TAX CODE § 311.012(a), that each taxing unit which levies real property taxes in the Zone, other than the City, has elected to dedicate to the Tax Increment Fund under an agreement, if any, with the City authorized by Section 311.013(f) of the Act; plus (ii) an amount calculated as a millage rate per hundred dollars of Captured Appraised Value (as defined below) of real property in the Zone that equals seventy-five (75%) percent of the "City's Total Tax Rate" as the same is levied, collected and allocated to the City's general fund, up to the maximum aggregate amount as described and set forth in the project plan and financing plan for the Zone and the Development Agreement. As used above, the phrase "Captured Appraised Value" means the captured appraised value of the property in the Zone as defined by TEX. TAX CODE § 311.012(b) (i.e., the total appraised value of all real property taxable by the City and located in the Zone in any given year less Tax Increment Base). The amount of the tax increment to be contributed by the City to the Zone shall be deemed limited as set forth above for purposes of Section 311.013(l) of the Act and shall not exceed the total aggregate amount specified in the Governing Documents.

Any interest received on monies held within the Tax Increment Fund as a result of depository interest or investment of said funds shall be added to the balance of the Tax Increment Fund and such interest shall be credited towards the maximum amount to be contributed by the City to the Tax Increment Fund.

The Tax Increment Fund shall be maintained in an account at a depository bank of the City and shall be secured in the manner prescribed by law for Texas municipalities. In addition, all revenues from (i) the sale of any obligations hereafter issued by the City and secured in whole or in part from the tax increments; (ii) revenues from the sale of any property acquired as part of a tax increment financing plan adopted by the Board; and (iii) other revenues dedicated to and used in the Zone shall be deposited into the Tax Increment Fund. Prior to the termination of the Zone, money shall be disbursed from the Tax Increment Fund only to pay project costs, as defined by the Texas Tax Code and pursuant to the terms

of the Development Agreement, for the Zone, or to satisfy the claims of holders of tax increments bonds or notes issued for the Zone, as may be applicable.

Any expenditure to be made from the Tax Increment Fund or any contract related thereto, must be approved by the City prior to such expenditure being made or contract being executed. Approval of the project plan and financing plan shall constitute approval by the City for payments and/or reimbursements for the various Zone projects identified therein in accordance with such plans, provided such payment is approved by the Board according to the policies and procedures set forth in the project plan, financing plan and Development Agreement. Notwithstanding any provision contained herein, revenues of the Zone may be pledged to assist financing the authorized improvement costs of a public improvement district on the Property, if created, to the extent such costs are associated with the improvements identified in the Project and Financing Plans of the Zone.

SECTION 9. APPROVAL OF PRELIMINARY FINANCING PLAN. The City hereby finds that the plan attached hereto as **Exhibit C** is economically feasible, was prepared in accordance with Section 311.003 of the Act and approves such plan as the Preliminary Financing Plan for the Zone.

SECTION 9. INCORPORATION OF RECITALS. The City hereby finds that the statements set forth in the recitals of this Ordinance are true and correct, and the City hereby incorporates such recitals as a part of this Ordinance.

SECTION 10. SEVERABILITY. If any provision of this Ordinance or the application thereof to any circumstances shall be held to be invalid, the remainder of this Ordinance and the application thereof to other circumstances shall nevertheless be valid, as if such invalid provision had never appeared herein, and this governing body hereby declares that this Ordinance would have been enacted without such invalid provision.

SECTION 11. EFFECTIVE DATE. The Zone shall take effect immediately upon passage of this Ordinance, pursuant to Section 311.004(a)(3) of the Act.

[*SIGNATURE & ATTESTATION ON FOLLOWING PAGE*]

INTRODUCED and PASSED at a FIRST READING on the 7th day of July, 2026**.**

APPROVED and PASSED on the SECOND and FINAL READING on this the ___ day of July, 2026.

CITY OF BROWNSVILLE, TEXAS

_____
John Cowen Jr.,
Mayor

ATTEST:

_____
Mayra Rios, TRMC
City Secretary

APPROVED AS TO FORM AND LEGALITY:

_____
Guillermo (Will) S. Trevino,
City Attorney

EXHIBIT A
Zone Property Description

Reinvestment Zone No. 5, City of Brownsville - Property Ownership Information from Cameron CAD - Properties in Zone						
Tract	Property ID	GEO ID	Property Owner	Legal Acreage	Appraised Value	Taxable Value
TRACT # 1						
	153527	77-9980-0290-0000-00	BROWNSVILLE PUBLIC UTILITIES BOARD	33.7300	$ 326,445.00	$ -
			Totals =	**33.7300**	**$ 326,445.00**	**$ -**
TRACT # 2						
	151371	77-3430-0680-0000-00	BROWNSVILLE PUBLIC UTILITIES BOARD	20.0000	$ 140,000.00	$ -
			Totals =	**20.0000**	**$ 140,000.00**	**$ -**
TRACT # 3						
	151370	77-3430-0670-0000-00	BROWNSVILLE PUBLIC UTILITIES BOARD	20.0000	$ 140,000.00	$ -
			Totals =	**20.0000**	**$ 140,000.00**	**$ -**
TRACT # 4						
	169499	79-2210-0070-0013-00	GREATER BROWNSVILLE INCENTIVES CORPORATION	105.5730	$ 633,438.00	$ -
			Totals =	**105.5730**	**$ 633,438.00**	**$ -**
TRACT # 5						
	357921	79-2210-0070-0018-00	GREATER BROWNSVILLE INCENTIVES CORPORATION	68.3840	$ 376,112.00	$ -
			Totals =	**68.3840**	**$ 376,112.00**	**$ -**
TRACT # 6						
	429937	79-2220-0060-0505-00	GREATER BROWNSVILLE INCENTIVES CORPORATION	55.9496	$ 335,698.00	$ -
			Totals =	**55.9496**	**$ 335,698.00**	**$ -**
TRACT # 7						
	374693	79-2220-0040-0401-00	GREATER BROWNSVILLE INCENTIVES CORPORATION	244.0870	$ 2,187,176.00	$ -
			Totals =	**244.0870**	**$ 2,187,176.00**	**$ -**
TRACT # 8						
	169964	79-2220-0040-0200-00	GREATER BROWNSVILLE INCENTIVES CORPORATION	73.6820	$ 589,456.00	$ -
			Totals =	**73.6820**	**$ 589,456.00**	**$ -**
TRACT # 9						
	241817	79-2220-0060-0410-00	GREATER BROWNSVILLE INCENTIVES CORPORATION	37.7000	$ 188,500.00	$ -
			Totals =	**37.7000**	**$ 188,500.00**	**$ -**
TRACT # 10						
	159385	78-9640-0010-0200-00	GREATER BROWNSVILLE INCENTIVES CORPORATION	142.8774	$ 714,387.00	$ -
			Totals =	142.8774	**$ 714,387.00**	**$ -**
TRACT # 11						
	356123	79-2220-0060-0501-00	GREATER BROWNSVILLE INCENTIVES CORPORATION	0.6871	$ 9,894.00	$ -
			Totals =	**0.6871**	**$ 9,894.00**	**$ -**
TRACT # 12						
	356124	79-2220-0060-0502-00	GREATER BROWNSVILLE INCENTIVES CORPORATION	0.7466	$ 9,556.00	$ -
			Totals =	**0.7466**	**$ 9,556.00**	**$ -**
TRACT # 13						
	356125	79-2220-0060-0503-00	GREATER BROWNSVILLE INCENTIVES CORPORATION	0.7167	$ 9,174.00	$ -
			Totals =	0.7167	**$ 9,174.00**	**$ -**
				TOTAL ACREAGE =	**$ 804.13**	
				TOTAL BASE VALUE =	**$ 0.00**	

PERCENTAGE OWNERSHIP BY PETITIONERS			
OWNER OF RECORD	Percentage	Appraised Value	Taxable Value
GREATER BROWNSVILLE INCENTIVES CORPORATION	90.8311%	89.2851%	$ -
BROWNSVILLE PUBLIC UTILITIES BOARD	9.1689%	10.7149%	$ -
Totals =	**100.0000%**	**100.0000%**	**$ -**

EXHIBIT B
Site Plan of Project

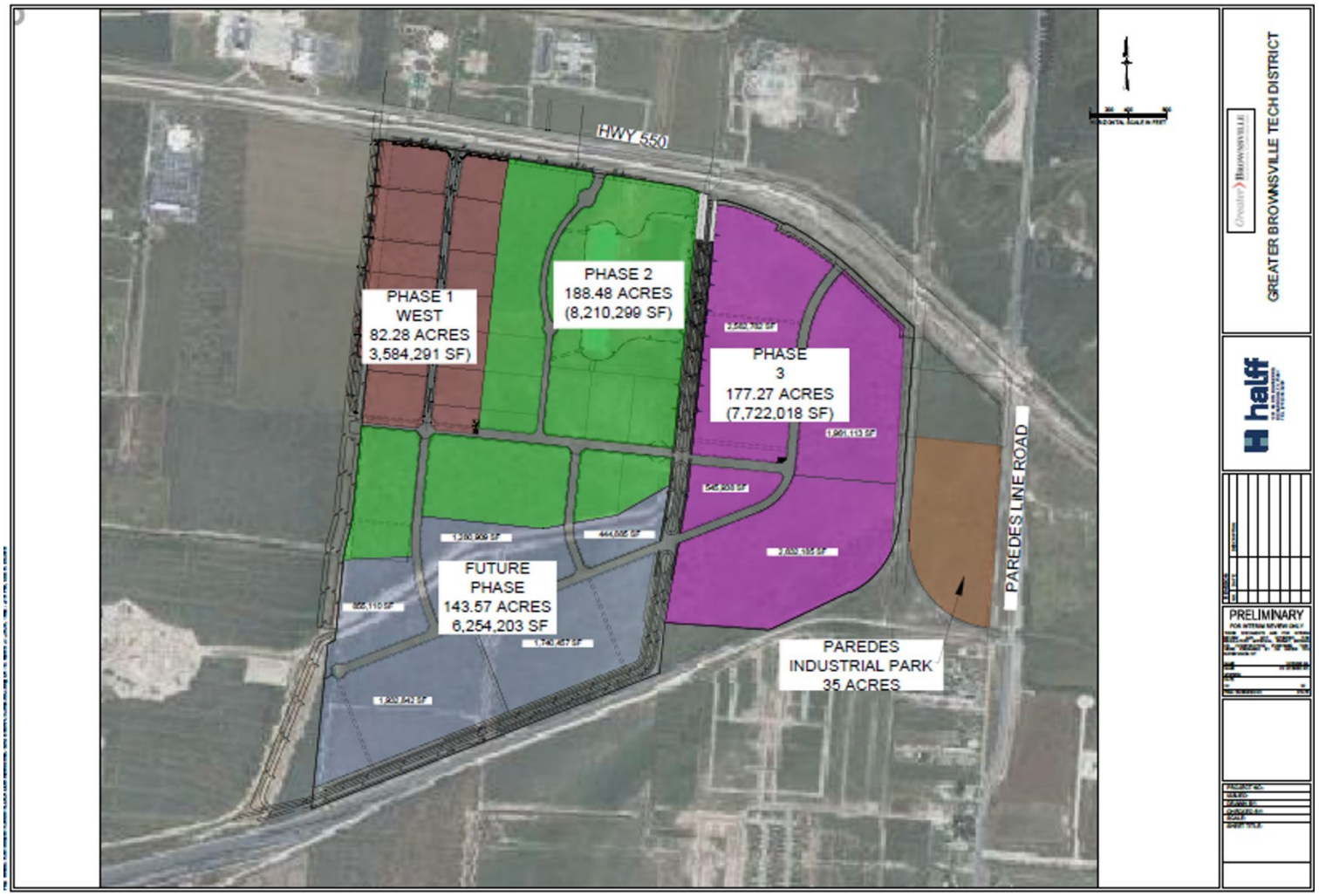

EXHIBIT C
Preliminary Financing Plan for
Reinvestment Zone Number Five, City of Brownsville
(See Attached)

Reinvestment Zone Number Five, City of Brownsville
Preliminary Financing Plan

July 1, 2026

TABLE OF CONTENTS

I. Executive Summary……... 2

II. Preliminary Financing Plan for Reinvestment Zone Number Five, City of Brownsville…. 5

III. Conclusions……... 11

IV. Exhibits……12

Exhibit 1 – Location Map ..... Ex. 1

Exhibit 2 – Financial Model and Information ..... Ex. 2

I. EXECUTIVE SUMMARY

BACKGROUND OF PROPOSED REINVESTMENT ZONE NUMBER FIVE, CITY OF BROWNSVILLE

Tax increment financing is both an economic and community development tool authorized by the Tax Increment Financing Act, Texas Tax Code, Chapter 311, as amended ("Chapter 311"), used to promote development or redevelopment in areas where development or redevelopment would not occur solely through private investment in the reasonably foreseeable future.

The City of Brownsville, Texas (the "City), received a petition submitted by the Greater Brownsville Economic Development Corporation, a Texas non-profit corporation (f/k/a the Greater Brownsville Incentives Corporation) (hereinafter the "Developer"), seeking designation of a reinvestment zone in accordance with and pursuant to TEX. TAX CODE § 311.005(a)(4) (the "Petition"). The area described in the Petition consisted of approximately 804.13 acres of real property located in the corporate limits of the City, and entirely in Cameron County, Texas.

The City examined the Petition and found that there was a demonstrated need for development and revitalization of the area described in the Petition, and in accordance with § 311.003(b), TEX. TAX. CODE, the City prepared this preliminary financing plan ("Preliminary Financing Plan").

THE TIRZ CONCEPT

Tax Increment Reinvestment Zone

TIRZ stands for "Tax Increment Reinvestment Zone." TIRZs are governed by Chapter 311 of the Texas Tax Code (Chapter 311). As of 2023, there were 477 active TIRZs created by 205 cities across Texas. TIRZs are used as a form of tax increment financing, which is an economic development tool used to attract both development and/or redevelopment. A city or county may create a TIRZ under Chapter 311 and, if created, the governing body establishes the boundaries of the zone, appoints an initial board of directors, and provides a termination date for the TIRZ.

Tax Increment Financing (TIF)

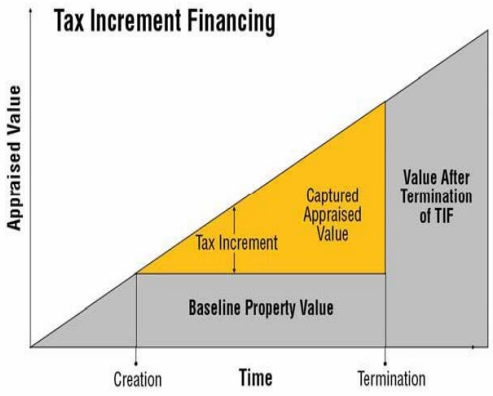

Tax Increment Financing is not an additional tax. Instead, at the time of TIRZ creation a "base tax value" is established for property located within the TIRZ boundaries. Each year the property taxes collected up to that base tax value—within the TIRZ—continue to go into the general fund of each participating taxing entity, such as the City. However, as property within the TIRZ develops and increases in value, property taxes collected over and above that base tax value are allocated to the TIRZ fund and may be used for costs of public works, public improvements, programs, or other projects benefitting property within the TIRZ and authorized under Chapter 311. The additional property taxes collected within the TIRZ over and above the base tax value are referred to as the "tax increment."

TIRZ Benefits

Tax increment financing is a tool that local governments can use to publicly finance needed structural improvements and enhanced infrastructure within a defined area. Benefits of a TIRZ generally include:

- Does not affect revenue currently going to the general fund of a city that it depends on for providing existing services;
- Does not involve additional or increased taxes on existing or new developments to produce revenues to serve as economic development incentives to attract investment;
- Does not involve the forgiveness of taxes;
- Creates an opportunity to include other taxing jurisdictions in providing the tax incentives used for new public infrastructure and revitalization efforts;
- Captures only the incremental increase in taxes on real property in the TIRZ (e.g., not business personal property, inventory, sales taxes) leaving those revenues available to benefit the city almost immediately;
- Assists with eligible costs for necessary public infrastructure in areas where the same is inadequate or lacking.

OVERVIEW OF PROPOSED PROJECT

If created, Reinvestment Zone Number Five, City of Brownsville (the "Zone" or the "TIRZ") would represent an important economic opportunity for the future of the City of Brownsville, Texas (the "City"). It will promote and encourage construction of approximately 804.13 acres of planned industrial development, as well as aid in facilitating the construction of public improvements and much-needed infrastructure modernization (the "Project").

The property included in the Petition has remained largely vacant, un/under-developed, or in dire need of revitalization because either: (1) the costs associated with developing the land in the preferred manner prohibit the efficient use of the property, or (2) the property has been unavailable for development when development should have occurred and current development costs for the desired development are uneconomical. Creation of the TIRZ would allow for (i) the development of a significant amount of industrial building/warehouse space; (ii) assistance in facilitating construction of roadways and other necessary public infrastructure in connection with the Project; (iii) provides a mechanism by which the City and Cameron County (the "County") can work together in financing necessary public improvements and utility infrastructure that are of a benefit to property within the proposed Zone and the City as a whole; (iv) allow for the creation of new jobs and related economic development that will cause public benefits that would otherwise be very difficult, if not impossible, to obtain due to costs that include on and off-site street and utility improvements and extensions.

If created, the Zone would be comprised of thirteen (13) total tracts of property located in an economically disadvantaged and/or blighted area within the city limits of the City (collectively, the "Property"). These thirteen (13) tracts are shown in greater detail on the map depicting the Property attached to this Preliminary Financing Plan as **Exhibit 1**.

ANTICIPATED BENEFITS OF DEVELOPMENT WITHIN THE PROPOSED ZONE

The projected benefits of the proposed Zone to the City and current/future residents of the community are as follows[1]:

[1] Project layout, total estimated square footage, or both may change due to evolving market conditions and/or platting, regulatory or development requirements.

- Construction of approximately Nine Million Three Hundred Fifty-Eight Thousand Two Hundred Seventy-Eight (9,358,278 ft^2) Square Feet of high quality, master planned manufacturing and warehouse space, with a final projected taxable value over the life of the proposed Zone of One Billion Five Hundred Twenty-Seven Million Six Hundred Eighty-One Thousand Three Hundred Ninety-Four and 29/100 ($1,527,681,394.29) Dollars;

- Construction of approximately Four Hundred Fifty-Four Thousand Seven Hundred Seven (454,707 ft^2) Square Feet of high quality, master planned office/commercial space, with a final projected taxable value over the life of the proposed Zone of Eighty-Seven Million Four Hundred Three Thousand Six Hundred Sixty-Six and 29/100 ($87,403,666.29) Dollars;

- Expansion of City's utility infrastructure network and customer base;

- Opportunity for cost-sharing to develop City's road network;

- Attraction of large-scale employers and increased quality employment opportunities, particularly in the manufacturing sector;

- Future projected additional tax base to City estimated to be One Billion Six Hundred Fifteen Million Eighty-Five Thousand Sixty and 57/100 ($1,615,085,060.57) Dollars over the life of the proposed Zone;

- Potential for interlocal cooperative partnership between City and Cameron County for public improvement projects by utilizing this economic development tool available under Texas law;

- Create jobs to enhance and support the rapidly increasing population, and improve the economy of the overall area within the City;

- Provide for newly constructed water, wastewater, drainage, electric, and road infrastructure;

- Enhance quality of life within the proposed Zone and City as a whole; and

- Create a new and replicable standard for more sustainable development within the City that encourages new development to pay for itself in a greater amount and does not place the burden unfairly on the current budgets of the City and County or on the existing taxpayers.

(*Remainder of Page Intentionally Left Blank*)

II. PRELIMINARY FINANCING PLAN FOR REINVESTMENT ZONE NUMBER FIVE, CITY OF BROWNSVILLE

The Preliminary Financing Plan for Reinvestment Zone Number Five, City of Brownsville, provides information on the projected monetary impact that the TIRZ could have on the Property described in **Exhibit 1** which is within the boundaries of the proposed Zone. It also describes how that impact would be utilized to enhance the area and region through leveraging the resources of the City and County in participating in the Project.

ESTIMATED PROJECT COSTS AND EXPENSES

The Public Improvements which would be constructed and financed pursuant to the Preliminary Financing Plan are those shown in **Exhibit 2**, including anticipated administrative and formation costs of the Zone. The total Project costs and expenses are estimated to be One Hundred Seventy-Eight Million Twenty-Nine Thousand Seven Hundred Nineteen and 59/100 ($178,029,719.59) Dollars.

LIST OF PUBLIC WORKS AND IMPROVEMENTS

"Project Costs" authorized under Section 311.002(1) of the Texas Tax Code are costs that may be paid by the City from the tax increment revenue generated from within the proposed Zone and deposited in the tax increment fund which would be established for the Zone pursuant to a future City Ordinance creating the Zone. Generally, these "Project Costs" may include such costs allowed under TEX. TAX CODE § 311.002(1), such as capital costs, including the actual costs of the acquisition and construction of public works, public improvements, new buildings, structures, and fixtures; the actual costs of the acquisition, demolition, alteration, remodeling, repair, or reconstruction of existing buildings, structures, and fixtures; the actual costs of the remediation of conditions that contaminate public or private land or buildings; the actual costs of the preservation of the facade of a public or private building; the actual costs of the demolition of public or private buildings; and the actual costs of the acquisition of land and equipment and the clearing and grading of land; financing costs, including all interest paid to holders of evidences of indebtedness or other obligations issued to pay for project costs and any premium paid over the principal amount of the obligations because of the redemption of the obligations before maturity; real property assembly costs; professional service costs, including those incurred for architectural, planning, engineering, and legal advice and services; imputed administrative costs, including reasonable charges for the time spent by employees of the municipality or county in connection with the implementation of a project plan; relocation costs; organizational costs, including the costs of conducting environmental impact studies or other studies, the cost of publicizing the creation of the zone, and the cost of implementing the project plan for the zone; interest before and during construction and for one year after completion of construction, whether or not capitalized; the cost of operating the reinvestment zone and project facilities; the amount of any contributions made by the municipality or county from general revenue for the implementation of the project plan; the costs of school buildings, other educational buildings, other educational facilities, or other buildings owned by or on behalf of a school district, community college district, or other political subdivision of this state; and payments made at the discretion of the governing body of the municipality, school district or county that the governing body finds necessary or convenient to the creation of the zone or to the implementation of the project plans for the zone. *See* TEX. TAX CODE § 311.002(1).

For the purposes of the proposed Zone and this Preliminary Financing Plan, project costs refer to those costs authorized under Chapter 311 **and** identified in the Preliminary Financing Model attached hereto as

Exhibit 2 (the "Project Costs"). The anticipated Project Costs are estimated to be One Hundred Seventy-Eight Million Twenty-Nine Thousand Seven Hundred Nineteen and 59/100 ($178,029,719.59) Dollars, of which (i) One Hundred Seventy-Eight Million Twenty-Nine Thousand Seven Hundred Nineteen and 59/100 ($178,029,719.59) Dollars, plus interest and financing costs thereon, are to be incurred by Developer for construction of Project improvements; (ii) Three Hundred Thousand and No/100 ($300,000.00) Dollars is allocated for payment of Administrative Costs to the City for administration of the proposed Zone and (iii) Three Hundred Fifty Thousand and no/100 ($350,000.00) Dollars is allocated for payment of Formation Costs associated with formation of the proposed Zone, all as authorized under Chapter 311 and, specifically, TEX. TAX. CODE § 311.002(1).

PROJECT FEASIBILITY

The City Commission has thoroughly reviewed this Preliminary Financing Plan for the proposed Zone and has found the same to be economically feasible, as expressed more fully in the Preliminary Financing Model attached hereto as **Exhibit 2**, which establishes that the Project is both economically feasible and is within market absorption capabilities.

ESTIMATED BOND INDEBTEDNESS & TIMELINE

The proposed Zone is not anticipated to issue any bonds at this time; however, if the Zone is created, the City may use bonds in the future to fund additional improvements which benefit the Zone. If the Zone is formed, such related costs or monetary obligations are estimated to be incurred beginning in 2026 and ending in 2056.

FINANCING PLAN OVERVIEW

The Tax Increment Base for the proposed Zone is Zero and no/100 ($0.00) Dollars (hereinafter also referred to "Base Value"). Pursuant to a future City Ordinance and an Interlocal Agreement to be entered into between the City, County and Zone, each respective taxing entity is anticipated to participate in the Zone by contributing varying percentage(s) of their respective Tax Increments into the Tax Increment Fund which are estimated to be in the amounts shown in the attached **Exhibit 2**, consisting of the revenue generated within the proposed Zone from the respective tax rates as assessed and collected on the Captured Appraised Value for each respective tax year during the term of the Zone, if created.

The proposed Zone would provide funding for approximately One Hundred Sixty-Five Million Four Hundred Seventy-Four Thousand Seventy-Seven and 64/100 ($165,474,077.67) Dollars, or One Hundred Sixty-Three Million Eight Hundred Nineteen Thousand Three Hundred Thirty-Six and 37/100 ($163,819,336.89) at Ninety-Nine (99%) Percent collection rate, of planned and future Public Infrastructure Improvements which are authorized as eligible for reimbursement under Chapter 311, including interest, Formation Costs, and Administrative Costs. The Preliminary Financing Plan indicates that if created, the Zone will yield adequate revenues to provide for incremental financing of a majority of the Project Costs as indicated in **Exhibit 2**. In the event of a shortfall in revenue for Project Costs, such shortfalls would be paid by Developer. Total projected revenue over the life of the proposed Zone is anticipated to be in excess of One Hundred Sixty-Three Million Eight Hundred Nineteen Thousand Three Hundred Thirty-Six and 37/100 ($163,819,336.89), leaving an anticipated shortfall of Fourteen Million Eight Hundred Sixty Thousand Three Hundred Eighty-Two and 70/100 ($14,860,382.70) Dollars to be paid by Developer.

MAXIMUM CONTRIBUTIONS

Maximum anticipated amount(s) of contribution to the TIRZ from the City and County from their respective ad valorem taxes on the Captured Appraised Value shall not exceed those projected in **Exhibit 2**.

FINANCING METHOD

Initial financing is anticipated to be accomplished through equity invested by the Developer through private investments and conventional land development bank loans, the issuance of Tax Increment Bonds (hereinafter also referred to as "Bonds"), if any, as well as other funding sources such as Tax Anticipation Notes, General Revenue Bonds, and other means when available. The City is anticipated to participate at seventy-five (75%) percent of its Tax Increment over the life of the proposed Zone, and County is anticipated to participate at seventy-five (75%) of its M&O Tax Increment as shown in **Exhibit 2**. In the event Bonds are issued, the Available Tax Increment from the Zone could serve as a repayment source for such Bonds. The projection of incremental property tax revenue contributed to the proposed Zone is as shown in **Figure 1**, on the following page:

(*Remainder of Page Intentionally Left Blank)*

Figure 1

Sources of Revenue Reinvestment Zone No. 5, City of Brownsville			
	Tax Revenue		
Year	City	County	TOTAL
0	$ -	$ -	$ -
1	$ -	$ -	$ -
2	$ 421,996.32	$ 235,841.59	$ 657,837.90
3	$ 433,601.22	$ 242,327.23	$ 675,928.45
4	$ 445,525.25	$ 248,991.23	$ 694,516.48
5	$ 798,306.79	$ 446,150.67	$ 1,244,457.45
6	$ 820,260.23	$ 458,419.81	$ 1,278,680.04
7	$ 842,817.38	$ 471,026.35	$ 1,313,843.74
8	$ 1,398,474.44	$ 781,567.08	$ 2,180,041.52
9	$ 1,436,932.49	$ 803,060.17	$ 2,239,992.66
10	$ 1,877,669.41	$ 1,049,375.34	$ 2,927,044.75
11	$ 1,929,305.31	$ 1,078,233.16	$ 3,007,538.48
12	$ 2,436,534.05	$ 1,361,708.69	$ 3,798,242.74
13	$ 2,503,538.73	$ 1,399,155.68	$ 3,902,694.41
14	$ 2,932,007.91	$ 1,638,614.76	$ 4,570,622.66
15	$ 3,012,638.13	$ 1,683,676.66	$ 4,696,314.79
16	$ 3,566,280.23	$ 1,993,091.28	$ 5,559,371.51
17	$ 3,664,352.93	$ 2,047,901.29	$ 5,712,254.22
18	$ 4,288,182.12	$ 2,396,541.45	$ 6,684,723.57
19	$ 4,406,107.13	$ 2,462,446.34	$ 6,868,553.47
20	$ 5,088,779.16	$ 2,843,972.08	$ 7,932,751.24
21	$ 5,228,720.59	$ 2,922,181.31	$ 8,150,901.90
22	$ 5,610,796.92	$ 3,135,712.76	$ 8,746,509.68
23	$ 5,765,093.83	$ 3,221,944.86	$ 8,987,038.69
24	$ 6,212,205.77	$ 3,471,822.85	$ 9,684,028.62
25	$ 6,383,041.43	$ 3,567,297.98	$ 9,950,339.41
26	$ 6,558,575.07	$ 3,665,398.67	$ 10,223,973.74
27	$ 6,738,935.89	$ 3,766,197.13	$ 10,505,133.02
28	$ 6,924,256.62	$ 3,869,767.56	$ 10,794,024.18
29	$ 7,114,673.68	$ 3,976,186.16	$ 11,090,859.84
30	$ 7,310,327.21	$ 4,085,531.28	$ 11,395,858.49
Totals:	$ 106,149,936.24	$ 59,324,141.42	**$ 165,474,077.67**

CURRENT APPRAISED VALUE

The Tax Increment Base, which represents the total appraised value of taxable real property located within the boundaries of the proposed Zone, would be zero and no/100 ($0.00) dollars - using the 2026 values provided by the Cameron County Appraisal District, the most recent certified appraised values (hereinafter also referred to "Base Value").

FINANCIAL ASSUMPTIONS

The Preliminary Financing Plan is based upon conservative assumptions. Accordingly, the Preliminary Financing Plan assumes that there will be no tax rate changes during the project term and assumes an increase in assessed values of existing tax base of only two and a three quarters (2.75%) percent per year rather than the actual average appreciation rate which is historically in excess of three (3.00%) percent per year.

The Preliminary Financing Plan also assumes that participating taxing entities will continue to collect tax revenues at the same rate and that homestead and other exemption rates will remain unchanged. Build-out rates of tax base within the Preliminary Financing Plan are based on conservative rates of absorption.

ESTIMATED CAPTURED APPRAISED VALUE

The estimated captured appraised value of the proposed Zone during each year of its existence can be seen in **Exhibit 2**, and in **Figure 2** below:

Figure 2
Estimated Captured Appraised Values During Proposed Zone Term

Estimated Captured Appraised Value (Cumulative)	
Year	Value
0	$ -
1	$ -
2	$ 93,232,481.88
3	$ 95,796,375.13
4	$ 98,430,775.45
5	$ 176,371,498.98
6	$ 181,221,715.20
7	$ 186,205,312.37
8	$ 308,967,726.86
9	$ 317,464,339.35
10	$ 414,837,218.68
11	$ 426,245,242.20
12	$ 538,308,290.35
13	$ 553,111,768.33
14	$ 647,774,311.08
15	$ 665,588,104.64
16	$ 787,905,349.60
17	$ 809,572,746.71
18	$ 947,396,563.75
19	$ 973,449,969.26
20	$ 1,124,274,053.91
21	$ 1,155,191,590.39
22	$ 1,239,604,469.12
23	$ 1,273,693,592.02
24	$ 1,372,474,918.67
25	$ 1,410,217,978.93
26	$ 1,448,998,973.36
27	$ 1,488,846,445.12
28	$ 1,529,789,722.36
29	$ 1,571,858,939.73
30	$ 1,615,085,060.57

DURATION OF THE PROPOSED ZONE

The proposed Zone has an anticipated life of thirty (30) years. If created, the City Ordinance creating the proposed Zone will also specify the termination date of the proposed Zone.

DISCLAIMER

The layout, density, unit mix, building configuration, and total number of industrial and/or commercial square footage described and/or depicted in this preliminary financing plan are conceptual in nature and may be subject to change. Final development plans may be modified based on market conditions, financing availability, economic feasibility, municipal review and approval processes, platting requirements, zoning and land use regulations, engineering and utility constraints, environmental considerations, infrastructure requirements, design refinements, and other governmental or agency requirements.

All figures, projections, site layouts, development assumptions, and estimated industrial/commercial square footage are preliminary estimates prepared solely for planning and financing evaluation purposes. However, it is understood that the Developer will use its best efforts to complete the project as quickly as economically feasible and as close to this Preliminary Financing Plan as possible.

CONCLUSIONS

Based upon a set of conservative assumptions and an analysis of the Preliminary Financing Plan, the Preliminary Financing Plan for the Zone is economically feasible and in compliance with Chapter 311 of the Texas Tax Code.

If created, the success of the Project within the Zone will encourage other development and revitalization efforts within the City, leading to higher property values overall. Creation of the Zone will help accommodate the City's growing industrial/warehouse needs, while the expansion of workplaces and industry will support a stronger retail base, create new employment opportunities, and attract additional private investment to the City. In addition, the proposed Zone will help stabilize and enhance future property values within the City.

(*Exhibit Page(s) Following*)

EXHIBITS
TIRZ REQUIREMENTS

Exhibit Number	Exhibit
1	Location Map
2	Financial Model and Information

EXHIBIT 1
Location Map

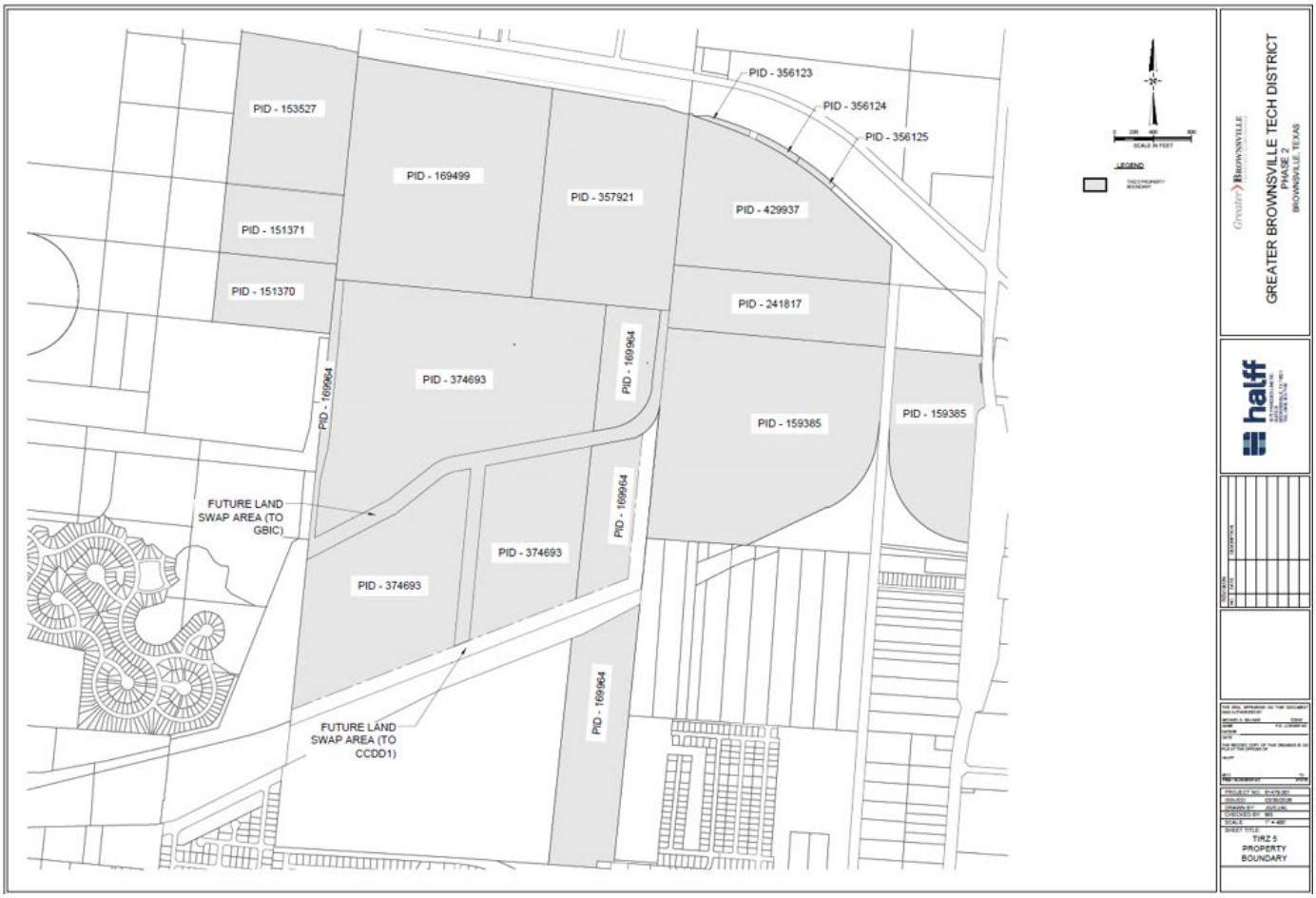

EXHIBIT 2
Preliminary Financing Model and Information

Preliminary Financing Plan for Brownsville TIRZ No. 5
Summary Fact Sheet
July 1, 2026

Zone Area (in Acres) =		**804.13**	**Total Sq. Ft. =**		**35,028,050.90**
2026 Base Assessed Value =	**$**	**0.00**			

					Projected Taxable Value
Uses	**Offices/Services**	**454,707**	**BldgSqft**	**$**	**87,403,666.29**
	Manufacturing	**9,358,278**	**BldgSqft**	**$**	**1,527,681,394.29**
	City Property & Pond	**3,832,844**	**Land Sqft**	**$**	**-**
	Development Reserve (PUB)	**3,578,454**	**Land Sqft**	**$**	**-**
			TOTAL	**$**	**1,615,085,060.57**

Projected Taxable Value at Year 30	**$**	**1,615,085,060.57**	(Assumes Annual Appreciation Factor)

TIRZ REVENUES

Participation Rate:	Taxing Entity:		Estimated Contribution:
75%	**City**	**$**	**106,149,936.24**
75%	**County M&O**	**$**	**59,324,141.42**
	Est. Total=	**$**	**165,474,077.67**

TIRZ Term **30 Years**

Est. Adjusted TIRZ Revenues (99% Collection Rate)	**$**	**163,819,336.89**
Est. Project Costs	**$**	**178,029,719.59**
Admin Cost	**$**	**(300,000.00)**
Formation Costs	**$**	**(350,000.00)**
Excess (Shortage)	**$**	**(14,860,382.70)**
Additional Developer Contribution	**$**	**14,860,382.70**

The projections and estimates contained in this model are subject to and may be impacted by market & economic conditions both domestic & international. Actual completion & construction of the projects may take more or less time than described herein. However it is understood that the Developer will use its best efforts to complete the project as quickly as economically feasible. A growth rate of 2.75% per year has been used to establish value of future tax base, year over year, which is lower than the actual average over the past ten (10) years. Bond(s) may be anticipated, the total amount and timing of such bonds shall be coordinated with the governing body and its professional consultants on such issuance(s).

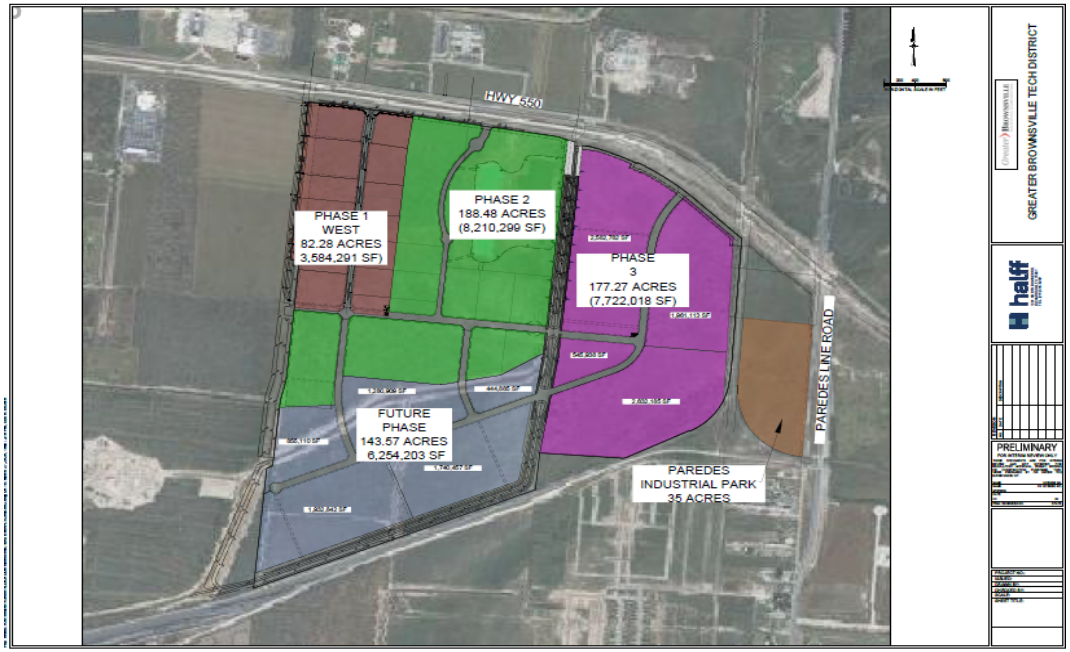
HWY 550
PHASE 1
WEST
82.28 ACRES
3,584,291 SF)
PHASE 2
188.48 ACRES
(8,210,299 SF)
PHASE
3
177.27 ACRES
(7,722,018 SF)
FUTURE
PHASE
143.57 ACRES
6,254,203 SF
PAREDES
INDUSTRIAL PARK
35 ACRES
PAREDES LINE ROAD
GREATER BROWNSVILLE TECH DISTRICT
PRELIMINARY

Engineer's Preliminary Opinion of Probable Construction Costs

halff

Title: Greater Brownsville Tech District
Acres: ± 804
Date of Estimate: February 5, 2026

Owner:	Greater Brownsville Incentives Corporation	**Halff Engineer:**	John Clint, PE
Contact:	Eleazar Rodriguez	**Halff PM:**	Michael Salinas, PE
Address:	500 E. Saint Charles Brownsville, Texas, 78520	**Address:**	1075 Paredes Line Road Brownsville, Texas 78521
E-Mail	erodriguez@greaterbrownsville.com	**Phone:**	(956) 303-7110

Construction Cost

Item No.	Item	Amount
1	Site Preparation & SW3P	$ 500,000.00
2	Site Earthwork Phase 1 West	$ 1,220,000.00
3	Site Earthwork (COB-GBIC Onsite Earthwork Agreement)(Fuel and Labor)[1]	$ 1,980,000.00
4	Site Earthwork [2]	$ 17,400,000.00
5	Road Improvements	$ 26,100,000.00
6	Drainage Improvements	$ 5,370,000.00
7	Road Ditch Culvert (Naranjo Road Crossing North)	$ 750,000.00
8	Road Ditch Culvert (Naranjo Road Crossing South)	$ 750,000.00
9	San. Sewer Improvements	$ 5,690,000.00
10	Water Improvements	$ 3,510,000.00
11	Offsite Utility Improvements	$ 1,110,000.00
12	Sanitary Sewer Lift Station (Phase 1)	$ 1,150,000.00
13	Sanitary Sewer Lift Station (Phase 3)	$ 1,200,000.00
14	Street Lighting/Electrical Improvements (On Site)	$ 10,020,000.00
15	Offsite Electrical Improvements (Off Site)	$ 2,000,000.00
16	Electrical Substation	$ 35,000,000.00
	Sub-Total	**$ 113,750,000.00**

Professional Services & Fees

Item No.	Item	Amount
17	Engineering, Surveying, Material Testing & Construction Phase	$ 17,070,000.00
Sub-Total Cost		**$ 130,820,000.00**
20% Contingency		$ 22,750,000.00
3% Inflation over 5 years		$ 24,459,719.59
Total of Construction		**$ 153,570,000.00**
Total of Construction (with inflation)		**$ 178,029,719.59**

[1] GBIC and the City had a deal to pay approximately $6 per CY of earthwork.
[2] An additional 800,000 cubic yards is needed to bring the properties outside of the floodplain limits.

Preliminary Financing Plan for Brownsville TIRZ No. 5

Assumed Values and Land Uses (with TIRZ Implementation)

Description	Category	SqFt	Avg Unit Value	Type Unit	Total Value
Offices/Services	OFF	454,707	$85.00	BldgSqft	$38,650,115.40
Manufacturing	MFG	9,358,278	$75.00	BldgSqft	$701,870,826.00
City Property and Pond		3,832,844	$0.00	Tax Exempt	$0.00
				TOTAL	**$740,520,941.40**

Brownsville TIRZ No. 5
TIRZ Financing Model

ALL VALUES ARE ASSESSABLE AD VALOREM ASSUMPTIONS

		2026	2027	2028	2029	2030
Development Type	**Development Year ▸**	0	1	2	3	4
	Current Value					
Offices/Services	$85.00	-	-	80,000.00		
Added Value		$ -	$ -	$ 6,987,000.00	$ -	$ -
Manufacturing	$75.00	-	-	1,127,392	-	-
Added Value		$ -	$ -	$ 86,245,481.88	$ -	$ -
Annual Added Value=		$ -	$ -	$ 93,232,481.88	$ -	$ -
Total Captured Value=		**$ -**	**$ -**	**$ 93,232,481.88**	**$ 95,796,375.13**	**$ 98,430,775.45**
TIRZ PARTICIPATION						
City	**$ 0.452628**	**$ -**	**$ -**	**$ 421,996.32**	**$ 433,601.22**	**$ 445,525.25**
County M&O	**$ 0.252961**	**$ -**	**$ -**	**$ 235,841.59**	**$ 242,327.23**	**$ 248,991.23**
TIRZ Revenue		**$ -**	**$ -**	**$ 657,837.90**	**$ 675,928.45**	**$ 694,516.48**

2031	2032	2033	2034	2035	2036	2037
5	6	7	8	9	10	11
				-	160,000.00	-
$ -	$ -	$ -	$ -	$ -	$ 17,361,025.83	$ -
906,581	-	-	1,306,800	-	750,000	-
$ 75,233,877.21	$ -	$ -	$ 117,641,768.40	$ -	$ 71,281,584.17	$ -
$ 75,233,877.21	$ -	$ -	$ 117,641,768.40	$ -	$ 88,642,610.00	$ -
$ 176,371,498.98	**$ 181,221,715.20**	**$ 186,205,312.37**	**$ 308,967,726.86**	**$ 317,464,339.35**	**$ 414,837,218.68**	**$ 426,245,242.20**

$ 798,306.79	**$ 820,260.23**	**$ 842,817.38**	**$ 1,398,474.44**	**$ 1,436,932.49**	**$ 1,877,669.41**	**$ 1,929,305.31**
$ 446,150.67	**$ 458,419.81**	**$ 471,026.35**	**$ 781,567.08**	**$ 803,060.17**	**$ 1,049,375.34**	**$ 1,078,233.16**
$ 1,244,457.45	**$ 1,278,680.04**	**$ 1,313,843.74**	**$ 2,180,041.52**	**$ 2,239,992.66**	**$ 2,927,044.75**	**$ 3,007,538.48**

2038	2039	2040	2041	2042	2043	2044
12	13	14	15	16	17	18
			-	-	-	-
$ -	$ -	$ -	$ -	$ -	$ -	$ -
1,000,000	-	750,000	-	930,000	-	978,676
$ 100,341,303.99	$ -	$ 79,451,969.12	$ -	$ 104,013,572.08	$ -	$ 115,560,566.51
$ 100,341,303.99	$ -	$ 79,451,969.12	$ -	$ 104,013,572.08	$ -	$ 115,560,566.51
$ 538,308,290.35	**$ 553,111,768.33**	**$ 647,774,311.08**	**$ 665,588,104.64**	**$ 787,905,349.60**	**$ 809,572,746.71**	**$ 947,396,563.75**

$ 2,436,534.05	**$ 2,503,538.73**	**$ 2,932,007.91**	**$ 3,012,638.13**	**$ 3,566,280.23**	**$ 3,664,352.93**	**$ 4,288,182.12**
$ 1,361,708.69	**$ 1,399,155.68**	**$ 1,638,614.76**	**$ 1,683,676.66**	**$ 1,993,091.28**	**$ 2,047,901.29**	**$ 2,396,541.45**
$ 3,798,242.74	**$ 3,902,694.41**	**$ 4,570,622.66**	**$ 4,696,314.79**	**$ 5,559,371.51**	**$ 5,712,254.22**	**$ 6,684,723.57**

2045	2046	2047	2048	2049	2050
19	20	21	22	23	24
-	214,707				
$ -	$ 30,557,647.02	$ -	$ -	$ -	$ -
-	750,000		400,000		458,829
$ -	$ 93,496,563.48	$ -	$ 52,645,110.00	$ -	$ 63,754,752.87
$ -	$ 124,054,210.50	$ -	$ 52,645,110.00	$ -	$ 63,754,752.87
$ 973,449,969.26	**$ 1,124,274,053.91**	**$ 1,155,191,590.39**	**$ 1,239,604,469.12**	**$ 1,273,693,592.02**	**$ 1,372,474,918.67**

$ 4,406,107.13	**$ 5,088,779.16**	**$ 5,228,720.59**	**$ 5,610,796.92**	**$ 5,765,093.83**	**$ 6,212,205.77**
$ 2,462,446.34	**$ 2,843,972.08**	**$ 2,922,181.31**	**$ 3,135,712.76**	**$ 3,221,944.86**	**$ 3,471,822.85**
$ 6,868,553.47	**$ 7,932,751.24**	**$ 8,150,901.90**	**$ 8,746,509.68**	**$ 8,987,038.69**	**$ 9,684,028.62**

2051	2052	2053	2054	2055	2056
25	26	27	28	29	30
$ -	$ -	$ -	$ -	$ -	$ -
$ -	$ -	$ -	$ -	$ -	$ -
$ -	$ -	$ -	$ -	$ -	$ -
$ 1,410,217,978.93	**$ 1,448,998,973.36**	**$ 1,488,846,445.12**	**$ 1,529,789,722.36**	**$ 1,571,858,939.73**	**$ 1,615,085,060.57**

$ 6,383,041.43	**$ 6,558,575.07**	**$ 6,738,935.89**	**$ 6,924,256.62**	**$ 7,114,673.68**	**$ 7,310,327.21**
$ 3,567,297.98	**$ 3,665,398.67**	**$ 3,766,197.13**	**$ 3,869,767.56**	**$ 3,976,186.16**	**$ 4,085,531.28**
$ 9,950,339.41	**$ 10,223,973.74**	**$ 10,505,133.02**	**$ 10,794,024.18**	**$ 11,090,859.84**	**$ 11,395,858.49**

TOTALS	
	454,707.00
$	54,905,672.85
	9,358,278
$	959,666,549.70
$	1,014,572,222.55
	1,615,085,060.57

$	**106,149,936.24**
$	**59,324,141.42**
$	**165,474,077.67**

Reinvestment Zone No. 5, City of Brownsville - Property Ownership

Information from Cameron CAD - Properties in Zone

Tract	Property ID	GEO ID	Property Owner	Legal Acreage	Appraised Value	Taxable Value
TRACT # 1						
	153527	77-9980-0290-0000-00	BROWNSVILLE PUBLIC UTILITIES BOARD	33.7300	$ 326,445.00	$ -
			Totals =	**33.7300**	**$ 326,445.00**	**$ -**
TRACT # 2						
	151371	77-3430-0680-0000-00	BROWNSVILLE PUBLIC UTILITIES BOARD	20.0000	$ 140,000.00	$ -
			Totals =	**20.0000**	**$ 140,000.00**	**$ -**
TRACT # 3						
	151370	77-3430-0670-0000-00	BROWNSVILLE PUBLIC UTILITIES BOARD	20.0000	$ 140,000.00	$ -
			Totals =	**20.0000**	**$ 140,000.00**	**$ -**
TRACT # 4						
	169499	79-2210-0070-0013-00	GREATER BROWNSVILLE INCENTIVES CORPORATION	105.5730	$ 633,438.00	$ -
			Totals =	**105.5730**	**$ 633,438.00**	**$ -**
TRACT # 5						
	357921	79-2210-0070-0018-00	GREATER BROWNSVILLE INCENTIVES CORPORATION	68.3840	$ 376,112.00	$ -
			Totals =	**68.3840**	**$ 376,112.00**	**$ -**
TRACT # 6						
	429937	79-2220-0060-0505-00	GREATER BROWNSVILLE INCENTIVES CORPORATION	55.9496	$ 335,698.00	$ -
			Totals =	**55.9496**	**$ 335,698.00**	**$ -**
TRACT # 7						
	374693	79-2220-0040-0401-00	GREATER BROWNSVILLE INCENTIVES CORPORATION	244.0870	$ 2,187,176.00	$ -
			Totals =	**244.0870**	**$ 2,187,176.00**	**$ -**
TRACT # 8						
	169964	79-2220-0040-0200-00	GREATER BROWNSVILLE INCENTIVES CORPORATION	73.6820	$ 589,456.00	$ -
			Totals =	**73.6820**	**$ 589,456.00**	**$ -**
TRACT # 9						
	241817	79-2220-0060-0410-00	GREATER BROWNSVILLE INCENTIVES CORPORATION	37.7000	$ 188,500.00	$ -
			Totals =	**37.7000**	**$ 188,500.00**	**$ -**
TRACT # 10						
	159385	78-9640-0010-0200-00	GREATER BROWNSVILLE INCENTIVES CORPORATION	142.8774	$ 714,387.00	$ -
			Totals =	142.8774	**$ 714,387.00**	**$ -**
TRACT # 11						
	356123	79-2220-0060-0501-00	GREATER BROWNSVILLE INCENTIVES CORPORATION	0.6871	$ 9,894.00	$ -
			Totals =	**0.6871**	**$ 9,894.00**	**$ -**
TRACT # 12						
	356124	79-2220-0060-0502-00	GREATER BROWNSVILLE INCENTIVES CORPORATION	0.7466	$ 9,556.00	$ -
			Totals =	**0.7466**	**$ 9,556.00**	**$ -**
TRACT # 13						
	356125	79-2220-0060-0503-00	GREATER BROWNSVILLE INCENTIVES CORPORATION	0.7167	$ 9,174.00	$ -
			Totals =	0.7167	**$ 9,174.00**	**$ -**
				TOTAL ACREAGE =	**$ 804.13**	
				TOTAL BASE VALUE =	**$ 0.00**	

PERCENTAGE OWNERSHIP BY PETITIONERS

OWNER OF RECORD	Percentage	Appraised Value	Taxable Value
GREATER BROWNSVILLE INCENTIVES CORPORATION	90.8311%	89.2851%	$ -
BROWNSVILLE PUBLIC UTILITIES BOARD	9.1689%	10.7149%	$ -
Totals =	**100.0000%**	**100.0000%**	**$ -**

Sources of Revenue Reinvestment Zone No. 5, City of Brownsville			
	Tax Revenue		
Year	City	County	TOTAL
0	$ -	$ -	$ -
1	$ -	$ -	$ -
2	$ 421,996.32	$ 235,841.59	$ 657,837.90
3	$ 433,601.22	$ 242,327.23	$ 675,928.45
4	$ 445,525.25	$ 248,991.23	$ 694,516.48
5	$ 798,306.79	$ 446,150.67	$ 1,244,457.45
6	$ 820,260.23	$ 458,419.81	$ 1,278,680.04
7	$ 842,817.38	$ 471,026.35	$ 1,313,843.74
8	$ 1,398,474.44	$ 781,567.08	$ 2,180,041.52
9	$ 1,436,932.49	$ 803,060.17	$ 2,239,992.66
10	$ 1,877,669.41	$ 1,049,375.34	$ 2,927,044.75
11	$ 1,929,305.31	$ 1,078,233.16	$ 3,007,538.48
12	$ 2,436,534.05	$ 1,361,708.69	$ 3,798,242.74
13	$ 2,503,538.73	$ 1,399,155.68	$ 3,902,694.41
14	$ 2,932,007.91	$ 1,638,614.76	$ 4,570,622.66
15	$ 3,012,638.13	$ 1,683,676.66	$ 4,696,314.79
16	$ 3,566,280.23	$ 1,993,091.28	$ 5,559,371.51
17	$ 3,664,352.93	$ 2,047,901.29	$ 5,712,254.22
18	$ 4,288,182.12	$ 2,396,541.45	$ 6,684,723.57
19	$ 4,406,107.13	$ 2,462,446.34	$ 6,868,553.47
20	$ 5,088,779.16	$ 2,843,972.08	$ 7,932,751.24
21	$ 5,228,720.59	$ 2,922,181.31	$ 8,150,901.90
22	$ 5,610,796.92	$ 3,135,712.76	$ 8,746,509.68
23	$ 5,765,093.83	$ 3,221,944.86	$ 8,987,038.69
24	$ 6,212,205.77	$ 3,471,822.85	$ 9,684,028.62
25	$ 6,383,041.43	$ 3,567,297.98	$ 9,950,339.41
26	$ 6,558,575.07	$ 3,665,398.67	$ 10,223,973.74
27	$ 6,738,935.89	$ 3,766,197.13	$ 10,505,133.02
28	$ 6,924,256.62	$ 3,869,767.56	$ 10,794,024.18
29	$ 7,114,673.68	$ 3,976,186.16	$ 11,090,859.84
30	$ 7,310,327.21	$ 4,085,531.28	$ 11,395,858.49
Totals:	$ 106,149,936.24	$ 59,324,141.42	**$ 165,474,077.67**

Estimated Captured Appraised Value (Cumulative)	
Year	Value
0	$ -
1	$ -
2	$ 93,232,481.88
3	$ 95,796,375.13
4	$ 98,430,775.45
5	$ 176,371,498.98
6	$ 181,221,715.20
7	$ 186,205,312.37
8	$ 308,967,726.86
9	$ 317,464,339.35
10	$ 414,837,218.68
11	$ 426,245,242.20
12	$ 538,308,290.35
13	$ 553,111,768.33
14	$ 647,774,311.08
15	$ 665,588,104.64
16	$ 787,905,349.60
17	$ 809,572,746.71
18	$ 947,396,563.75
19	$ 973,449,969.26
20	$ 1,124,274,053.91
21	$ 1,155,191,590.39
22	$ 1,239,604,469.12
23	$ 1,273,693,592.02
24	$ 1,372,474,918.67
25	$ 1,410,217,978.93
26	$ 1,448,998,973.36
27	$ 1,488,846,445.12
28	$ 1,529,789,722.36
29	$ 1,571,858,939.73
30	$ 1,615,085,060.57

To:	Mayor and City Commission
Through:	Alan Guard, Interim City Manager
From:	Martin Vega, Assistant Director of Land Development Services
Date:	Tuesday, July 21, 2026
Agenda #:	Public Hearing and **ACTION** on **FIRST READING** on **Ordinance Number 235-2026-014-S**, to request a Specific Use Permit (SUP) in a Downtown Edge (DE) zoning district to allow an event center for Lots 13 & 14, Block 120, Brownsville Original Townsite, Cameron County, Texas, located at 1247 East Madison Street, Brownsville, Texas 78520, as shown in Exhibit "A". (District 4) (Planning & Redevelopment Department)

Summary:

Property owner, 1247 E. Madison, LLC., has requested a Specific Use Permit to allow an event center for Lots 13 & 14, Block 120, Brownsville Original Townsite, Cameron County, Texas, located at 1247 East Madison Street, Brownsville, Texas 78520. The base zoning of the property is Downtown Edge (DE).

The predominant land use in the surrounding area is residential single-family dwellings. Additional uses, such as undeveloped land, commercial uses, and civic institutions, are also present within the vicinity.

The property is located within the Downtown Node District. The request is consistent with the Future Land Use Map.

Project Scope and Analysis:

The subject property is currently the site of a historic building. It is the intent of the developer to repurpose the existing structure into an event center that will consist of an indoor and outdoor component. The proposed event center space will be situated on two lots whose combined area is 12,000 square feet or 0.2754 acre. It is important to point out that this venue will not offer any on-site parking. As per the Unified Development Code (UDC), properties that are zoned Downtown Core (DC), Downtown General (DG), or Downtown Edge (DE), and that are located within the Historic Overlay District, are exempt from on-site parking requirements. All parking for this venue will be on-street parking.

Pursuant to the UDC, the establishment and operation of an event hall within city limits requires approval of a Specific Use Permit. A Specific Use Permit provides an additional layer of review and protection for surrounding properties by allowing the City to establish development standards intended to address potential use-related impacts, including noise.

If approved, the development shall be subject to the following conditions:

• Sound mitigation measures, including interior finish-out materials such as acoustic tiles or other approved sound-dampening insulation, shall be installed to ensure that noise levels do not exceed sixty (60) decibels when measured at the common property line shared by the noise-emitting use and adjacent residential zoning districts.

Funding:

Source: Fiscal Dept. Approval Not Required

Amount: N/A

Local Contribution if Applicable: N/A

Recommendation:

There was no written or verbal opposition at the Planning & Zoning Commission meeting on July 9, 2026. The Planning & Zoning Commission recommends approval for this Specific Use Permit to allow an event center in Downtown Edge (DE).

Commission Pillar:

Planning & Zoning

Attachments:

1. Case 235-2026-014-S Binder
2. First Reading Zoning Case 7092026 UPDATED

ORDINANCE NUMBER 235-2026-014-S

AN ORDINANCE AMENDING THE "CITY ZONING ORDINANCE" BY AMENDING THE OFFICIAL ZONING ATLAS TO ALLOW AN EVENT CENTER IN A DOWNTOWN EDGE (DE) ZONING DISTRICT FOR LOTS 13 & 14, BLOCK 120, BROWNSVILLE ORIGINAL TOWNSITE, CAMERON COUNTY, TEXAS, LOCATED AT 1247 EAST MADISON STREET, BROWNSVILLE, TEXAS 78520.; AND DEALING WITH RELATED MATTERS INCLUDING $2000 PENALTIES.

WHEREAS, this ordinance is in accordance with the City's comprehensive plan; is consistent with the existing zoning surrounding the area to be rezoned; and bears a substantial relationship to the public health, safety, morals or general welfare; and all procedural requirements for the passage hereof have been met;

Be It Ordained by the City of Brownsville:

Section 1. That the City Commission of the City of Brownsville, Texas, hereby amends the "City Zoning Ordinance" by amending the Official Zoning Atlas to allow an event center in a Downtown Edge (DE) zoning district for Lots 13 & 14, Block 120, Brownsville Original Townsite, Cameron County, Texas, located at 1247 East Madison Street, Brownsville, Texas 78520, as shown in Exhibit "A"; the area rezoned by this amendment being situated entirely within the corporate limits of Brownsville, Cameron County, Texas.

Section 2. That all provisions of the City of Brownsville Unified Development Code are incorporated herein by reference and declared to be a part hereof; and that this ordinance shall become effective on the earliest date allowed by law.

Section 3. The property described above and by this ordinance is subject to the following conditions:

- Sound mitigation measures and interior finish-out materials such as acoustic tiles or other approved sound-dampening insulators shall be installed to maintain a noise level less than or equal to sixty (60) decibels when measured at the common property line shared by the noise emitting use and adjacent residential zoning districts.

INTRODUCED at a public hearing on **July 21, 2026**. Passed at First Reading on **July 21, 2026**. PASSED at Second and Final Reading and ADOPTED, APPROVED, and ENACTED on **August 4**, **2026**.

(SEAL)

BY: _____
John Cowen Jr.
Mayor

ATTEST: _____
Mayra Rios
City Secretary

STAFF REPORT

Planning & Redevelopment Department
Zoning Division
1034 E. Levee St. 2nd Floor
Brownsville, TX 78520
(956) 548-6150

APPLICATION DETAILS

Applicant/Representative: Renee Sanchez
Property Address: 1247 E Madison Street
Application Type: Specific Use Permit (SUP)
Current Zoning: Downtown Edge (DE)

Application Date: May 14, 2026
CC Meeting Dates: 1st – July 21, 2026 / 2nd August 4, 2026
Overlay(s): Historical Preservation Overlay, Downtown District
No. of Mail-outs: 21

Geo ID: 01-0000-1200-0130-00
Case No.: 235-2026-014-S
Proposed Use: Event Center
Proposed Zoning: Downtown Edge (DE) w/ Specific Use Permit (SUP)
P&Z Date: July 9, 2026
Electoral District: 4
Annexation Year: Pre-1930
Opposition: No Verbal or Written Opposition

PROPERTY DETAILS

Legal Description: Lots 13 & 14, Block 120, Brownsville Original Townsite, Cameron County, Texas, located 1247 E Madison Street, Brownsville, Texas 78520.
Roadway Frontage: The subject property is fronting Madison Street, a Collector.
Predominant Land Use: The predominant land use is a mix of office, retail, and other commercial land uses, with scattered single family residential uses.

ABUTTING LAND USES (*SEE ATTACHED AERIAL VIEW MAP)*

North: Single Family Residential, Commercial
East: Commercial
South: Commercial
West: Single Family Residential, Commercial

EXISTING ZONING DESIGNATIONS (*SEE ATTACHED ZONING MAP)*

North: Downtown Edge (DE), Downtown Core (DC)
East: Downtown Edge (DE)
South: Downtown Edge (DE), Downtown General (DG)
West: Downtown Edge (DE), Downtown Core (DC)

FUTURE LAND USE PLAN (*SEE ATTACHED FUTURE LAND USE MAP)*

The City of Brownsville Future Land Use Plan indicates that the subject land is located within the Downton Node District. Land use in the Downtown District is a balanced mixture of residential, community facilities, and commercial, with some institutional. Light industrial land uses are permitted in the form of research facilities, as this District should be oriented to residential, educational, and community facility uses close to the Rio Grande and provide a transition from Downtown to the primarily residential neighborhoods in the western portions of the City. The requested specific use permit is consistent with the future land use map.

REVIEW CRITERIA

After an analysis of the subject property and its surrounding context, staff has determined that the proposed zoning and associated use would be compatible with the adjacent zoning districts and land uses, and would not place significant or undue strain on existing public infrastructure, including water, wastewater, and transportation systems.

STAFF RECOMMENDATION

Based upon the analysis presented in this report and observations from the Planning & Redevelopment Department, staff recommends approval of the Specific Use Permit (SUP) request for an event center within the existing Downton Edge (DG) District, subject to sound mitigation requirements.

E 11TH ST
E 12TH ST
E JACKSON ST
SUBJECT PROPERTY
E MONROE ST
E 13TH ST
E MADISON ST
E 14TH ST
E JEFFERSON ST
N
Case No. 235-2026-014-S

City of Brownsville Zoning Map

Zoning Districts

- AG - Agricultural
- RE - Residential Estate
- R-1 - Residential Single Family
- R-2 - Residential Suburban
- R-3 - Residential Transition
- TN - Traditional Neighborhood
- TN-MU - Traditional Neighborhood Mixed Use
- TN-C - Traditional Neighborhood Corridor
- DE - Downtown Edge
- DG - Downtown General
- DC - Downtown Core
- CC - Corridor Commercial
- RC - Reginal Center
- LI - Ligtht Industrial
- HI - Heavy Industrial

EXHIBIT "A"

Address:
1247 E Madison St,
Brownsville, Texas, 78520

Proposed Zoning:
Downtown Edge w/ SUP, DT-E w/ SUP

Current Zoning:
Downtown Edge, DT-E

Brownsville Electoral District #4

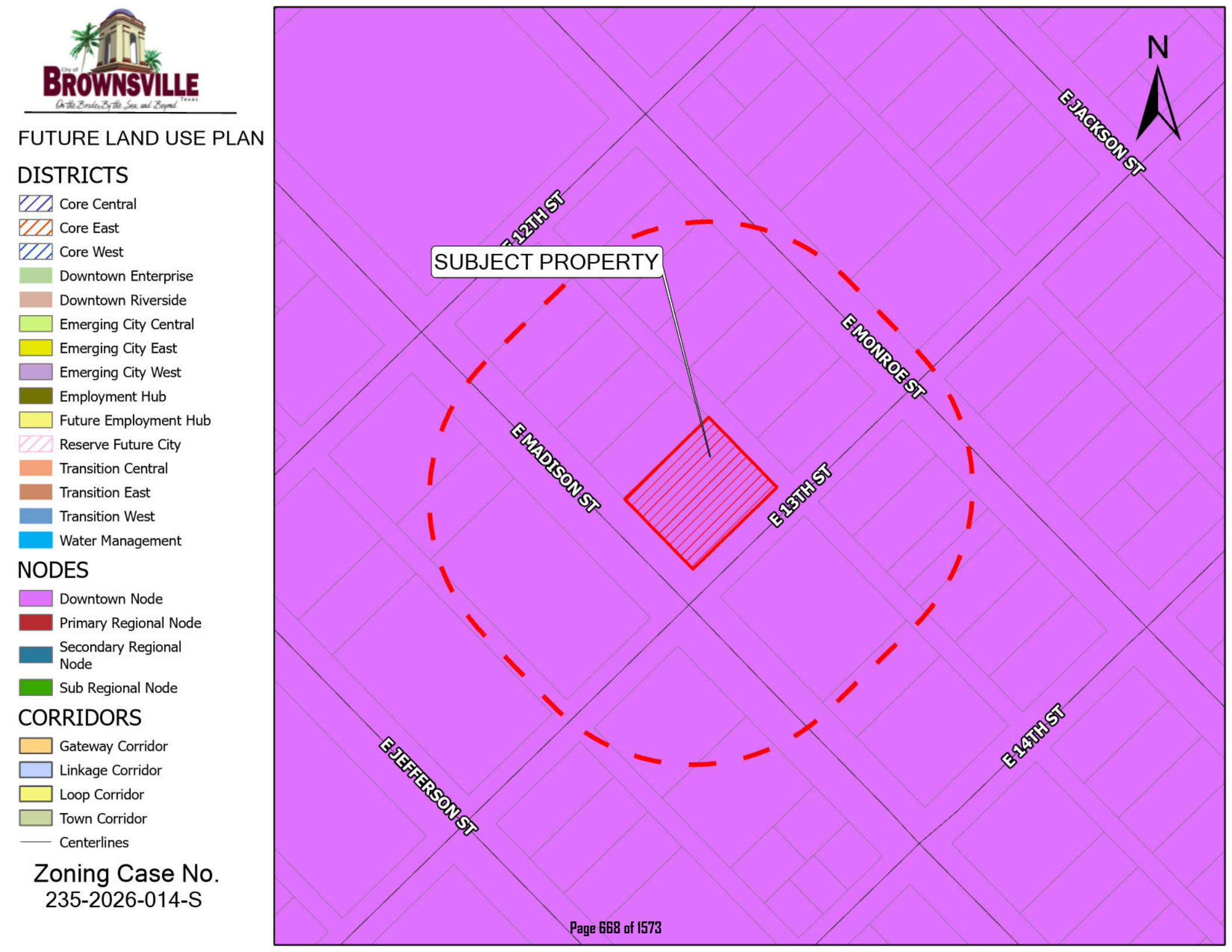
FUTURE LAND USE PLAN
DISTRICTS
Core Central
Core East
Core West
Downtown Enterprise
Downtown Riverside
Emerging City Central
Emerging City East
Emerging City West
Employment Hub
Future Employment Hub
Reserve Future City
Transition Central
Transition East
Transition West
Water Management
NODES
Downtown Node
Primary Regional Node
Secondary Regional Node
Sub Regional Node
CORRIDORS
Gateway Corridor
Linkage Corridor
Loop Corridor
Town Corridor
Centerlines
Zoning Case No.
235-2026-014-S
N
E JACKSON ST
E 12TH ST
SUBJECT PROPERTY
E MONROE ST
E MADISON ST
E 13TH ST
E JEFFERSON ST
E 14TH ST

GENERAL NOTES

1. BASIS OF BEARINGS AS PER THE TEXAS STATE PLANE COORDINATE SYSTEM, SOUTH ZONE, NAD 83 ESTABLISHED FOR THE NORTHEAST CORNER OF LOT 1 AND SOUTHWEST OF LOT 9, BLOCK 120, BROWNSVILLE ORIGINAL TOWNSITE.

2. ADDRESS: 1247 E. MADISON STREET
BROWNSVILLE, TEXAS 78520

3. THIS SURVEY WAS PREPARED WITHOUT THE BENEFIT OF A COMMITMENT FOR TITLE INSURANCE AND MAY BE SUBJECT TO EASEMENTS AND RESERVATIONS NOT REFLECTED HEREON.

4. NEIGHBOR'S CANOPY OVERLAPS BOUNDARY AS SHOWN.

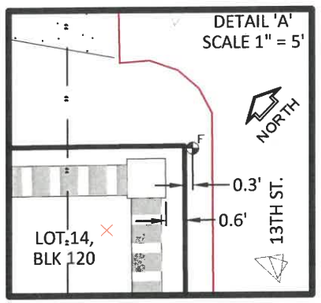

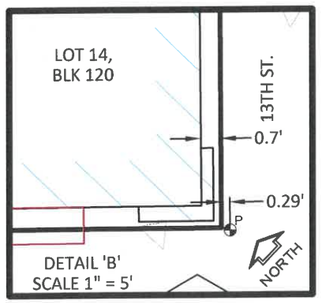

LEGEND

NS	PK NAIL SET
F	IRON ROD FOUND
NF	NAIL FOUND
S	IRON ROD SET WITH CAP STAMPED MEDINA 5719
T	TELEPHONE PEDESTAL
W	WATER METER
ET	TRANSFORMER
C	CABLE PEDESTAL
A/C	A/C UNIT
	MAILBOX
	CLEANOUT
35.4	NATURAL GROUND ELEV

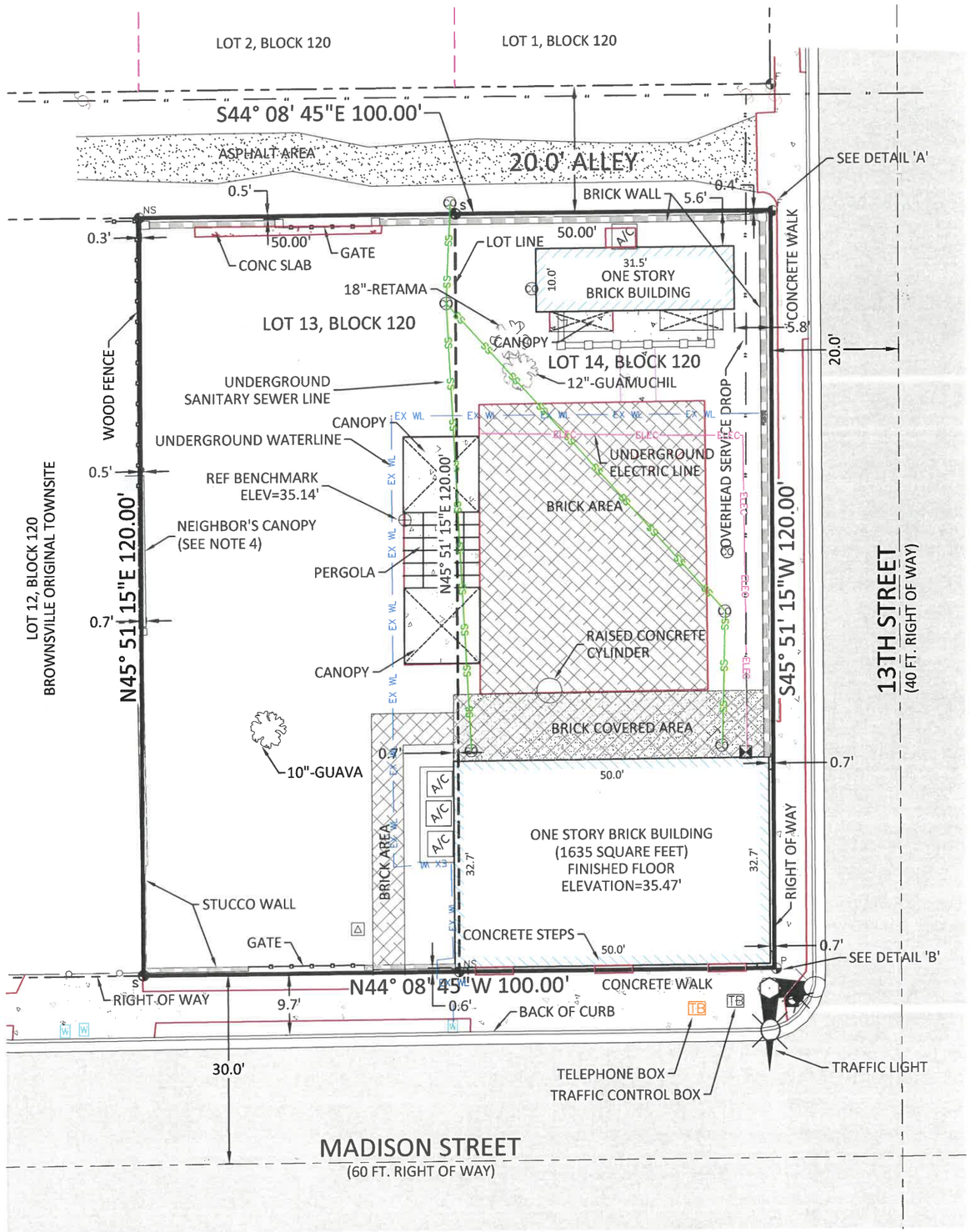

FLOOD ZONE

BY GRAPHIC PLOTTING ONLY, THIS PROPERTY LIES IN ZONE "X", AS PER THE NATIONAL FLOOD INSURANCE PROGRAM OF COMMUNITY NO. 480103, PANEL NO. 0590, SUFFIX "F", REVISED FEBRUARY 16, 2018.

SURVEYOR CERTIFICATE

I, JOSE D. MEDINA, A REGISTERED PROFESSIONAL LAND SURVEYOR IN THE STATE OF TEXAS, HEREBY CERTIFY THAT THIS DRAWING WAS PREPARED FROM AN ON THE GROUND SURVEY PERFORMED BY ME OR BY MEN UNDER MY SUPERVISION. THIS SURVEY CONFORMS TO THE MINIMUM STANDARDS OF PRACTICE PROMULGATED BY THE TEXAS BOARD OF PROFESSIONAL ENGINEERS AND LAND SURVEYORS.

JOSE D. MEDINA, R.P.L.S.
REGISTERED PROFESSIONAL
LAND SURVEYOR NO. 5719

1 May 2026
DATE

STATE OF TEXAS
REGISTERED
JOSE D. MEDINA
5719
PROFESSIONAL
LAND SURVEYOR

BOUNDARY SURVEY OF:

LOT THIRTEEN (13) AND LOT FOURTEEN (14)
BLOCK ONE-HUNDRED TWENTY (120)
BROWNSVILLE ORIGINAL TOWNSITE
CAMERON COUNTY, TEXAS, ACCORDING TO THE
MAP THEREOF RECORDED IN VOLUME 5, PAGE 13,
MAP RECORDS, CAMERON COUNTY, TEXAS.

REVISED 1 MAY 2026
UPDATED TO ADD NEW BUILDING ALONG BACK PORTION OF LOT 14, BLOCK 120

FOR: 1247 E MADISON, LLC

FERRIS, FLINN & MEDINA, LLC
ENGINEERS SURVEYORS
1405 N. STUART PLACE ROAD
PALM VALLEY, TEXAS 78552
PHONE (956) 364-2236 FAX (956) 364-1023
TEXAS BOARD OF PROFESSIONAL LAND SURVEYING FIRM REGISTRATION NO. 10037000
TEXAS BOARD OF PROFESSIONAL ENGINEERS FIRM REGISTRATION NO. F-887

1" = 20'	DRAWN BY: JDM	26 SEPTEMBER 2024	JOB NO: 1165-001

CREW: MIGUEL GUTIERREZ / MARC GARCIA

LATITUDE: N 25° 54' 10.8" LONGITUDE: W 97° 29' 40.1"

20' 0 20' 40'

Scale: 1" = 20'

F:\1165 Marianne Sanchez\1165-001 Lot 13-14 Blk 120 Brownsville OT\Dwg\1165-001.dwg

Project Note: Sound mitigation measures and interior finish-out materials such as acoustic tiles or other approved sound-dampening insulators shall be installed to maintain a noise level less than or equal to sixty (60) decibels when measured at the common property line shared by the noise emitting use and adjacent residential zoning districts

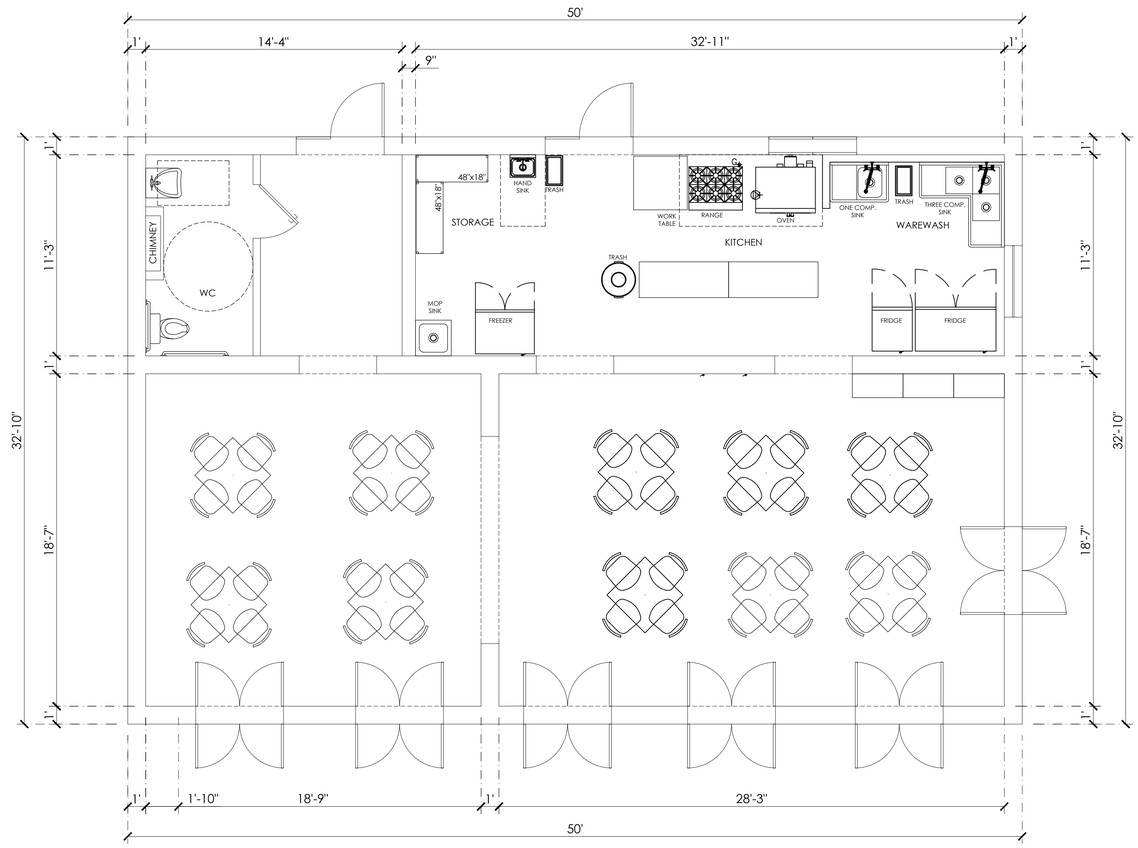

FLOOR PLAN - SAMPLE SEATING ARRANGEMENT

SCALE: 1/4" = 1'-0"

NORTH

EAST MADISON EVENTS

1247 E MADISON ST.
BROWNSVILLE, TEXAS 78520

REVISION:

PLAN:
FLOOR PLAN
FURNITURE

Planning and Redevelopment Department
Zoning Division
1034 E. Levee St. 2nd Floor
Brownsville, TX 78520
(956) 548-6150

First Reading Zoning Cases

CITY COMMISSION HEARING DATE: JULY 21, 2026

Case Number	*Electoral District*	*Application Type*	*Property Address*	*Applicant/ Representative Name*	*Zoning Change*	*Reason for Request*	*Opposition*
235-2026-014-S	4	Specific Use Permit (SUP)	1247 East Madison Street	1247 E. Madison, LLC	To request a Specific Use Permit (SUP) in Downtown Edge (DE)	To allow an event center	No verbal or written opposition
235-2026-015	3	Rezone	1 West Paredes Line Road	Sattva Investments, LLC./Sashi Sachdev	To rezone from Agriculture (AG) to Residential Single-Family (R-1) and Commercial Corridor (CC)	To allow a single-family residential development and a commercial development	No verbal or written opposition
235-2026-016	1	Rezone	970 South Central Avenue	MF Builders, LLC./ Cirilo Zuniga	To rezone from Residential Single-Family (R-1) and Traditional Neighborhood Corridor (TN-C) to Traditional Neighborhood Corridor (TN-C)	To allow a multifamily development	No verbal or written opposition

To:	Mayor and City Commission
Through:	Alan Guard, Interim City Manager
From:	Martin Vega, Assistant Director of Land Development Services
Date:	Tuesday, July 21, 2026
Agenda #:	Public Hearing and **ACTION** on **FIRST READING** on **Ordinance Number 235-2026-015**, to rezone from Agriculture (AG) to Residential Single-Family (R-1) for an approximate 105.29 acres and Commercial Corridor (CC) for an approximate 14.67 acres to allow a single-family residential development and commercial development on a tract containing 119.96 acres of land out of a 239.92 acre tract (called the West 239.48 acres), out of Tract 40, Paredes Partition Tract, Subdivision "E", in Share 19 of the Espiritu Santo Grant, Cameron County, Texas, located at 1 West Paredes Line Road , Brownsville, Texas 78566, as shown in Exhibit "A". (District 3) (Planning & Redevelopment Department)

Summary:

Property owner, Sattva Investments, LLC., proposes to change the Zoning Designation for a combined 119.96 acres to allow a single-family residential development and commercial development for an approximate 105.29 acres and an approximate 14.67 acres, respectively, out of a 239.92 acre tract (called the West 239.48 acres), out of Tract 40, Paredes Partition Tract, Subdivision "E", in Share 19 of the Espiritu Santo Grant, Cameron County, Texas, located at 1 West Paredes Line Road , Brownsville, Texas 78566. The applicant requests to rezone the subject property from Agriculture (AG) to Residential Single-Family (R-1) and Corridor Commercial (CC) for the purpose of establishing a single-family residential development with a commercial element along the property frontage.

The predominant land use in the surrounding area is undeveloped land. No additional uses are present within proximity of the subject property.

Project Scope and Analysis:

The property is located within the Water Management District. The request is not consistent with the existing Future Land Use Map; however, previous residential developments at the proposed scale have been previously approved to expand housing options and provide neighborhood-scale commercial uses in this mostly undeveloped area of the city.

The subject property has an approximate gross area of 119.96 acres and is currently vacant. The applicant is requesting zoning reclassification due to the current zoning (AG) only allowing large single-family estates and ranch/farming uses. To be specific, the current zone only permits single-

family homes on 40,000-square-foot lots. A residential development such as the one being proposed, consisting of lot sizes between 6,500 and 9,500 square feet, would not be permitted in the Agriculture zoning. The (R-1) zoning designation would permit the proposed density and use. Additionally, the proposed commercial use and lot size along the thoroughfare frontage require a Corridor Commercial (CC) zoning designation.

Funding:

Source: Fiscal Dept. Approval Not Required

Amount: N/A

Local Contribution if Applicable: N/A

Recommendation:

There was no written or verbal opposition at the Planning and Zoning Commission meeting on July 9, 2026. The Planning & Zoning Commission recommends approval for this rezoning from Agriculture (AG) to Residential Single-Family (R-1) and Commercial Corridor (CC).

Commission Pillar:

Planning & Zoning

Attachments:

1. First Reading Zoning Case 7092026 UPDATED
2. Case 235-2026-015 Binder

Planning and Redevelopment Department
Zoning Division
1034 E. Levee St. 2nd Floor
Brownsville, TX 78520
(956) 548-6150

First Reading Zoning Cases

CITY COMMISSION HEARING DATE: JULY 21, 2026

Case Number	*Electoral District*	*Application Type*	*Property Address*	*Applicant/ Representative Name*	*Zoning Change*	*Reason for Request*	*Opposition*
235-2026-014-S	4	Specific Use Permit (SUP)	1247 East Madison Street	1247 E. Madison, LLC	To request a Specific Use Permit (SUP) in Downtown Edge (DE)	To allow an event center	No verbal or written opposition
235-2026-015	3	Rezone	1 West Paredes Line Road	Sattva Investments, LLC./Sashi Sachdev	To rezone from Agriculture (AG) to Residential Single-Family (R-1) and Commercial Corridor (CC)	To allow a single-family residential development and a commercial development	No verbal or written opposition
235-2026-016	1	Rezone	970 South Central Avenue	MF Builders, LLC./ Cirilo Zuniga	To rezone from Residential Single-Family (R-1) and Traditional Neighborhood Corridor (TN-C) to Traditional Neighborhood Corridor (TN-C)	To allow a multifamily development	No verbal or written opposition

ORDINANCE NUMBER 235-2026-015

AN ORDINANCE AMENDING THE "CITY ZONING ORDINANCE" BY AMENDING THE OFFICIAL ZONING ATLAS TO REZONE FROM AGRICULTURE (AG) TO RESIDENTIAL SINGLE-FAMILY (R-1) FOR AN APPROXIMATE 105.29 ACRES AND COMMERCIAL CORRIDOR (CC) FOR AN APPROXIMATE 14.67 ACRES TO ALLOW A SINGLE-FAMILY RESIDENTIAL DEVELOPMENT AND COMMERCIAL DEVELOPMENT ON A TRACT CONTAINING 119.96 ACRES OF LAND OUT OF A 239.92 ACRE TRACT (CALLED THE WEST 239.48 ACRES), OUT OF TRACT 40, PAREDES PARTITION TRACT, SUBDIVISION "E", IN SHARE 19 OF THE ESPIRITU SANTO GRANT, CAMERON COUNTY, TEXAS, LOCATED AT 1 WEST PAREDES LINE ROAD, BROWNSVILLE, TEXAS 78566.; AND DEALING WITH RELATED MATTERS INCLUDING $2000 PENALTIES.

WHEREAS, this ordinance is in accordance with the City's comprehensive plan; is consistent with the existing zoning surrounding the area to be rezoned; and bears a substantial relationship to the public health, safety, morals or general welfare; and all procedural requirements for the passage hereof have been met;

Be It Ordained by the City of Brownsville:

Section 1. That the City Commission of the City of Brownsville, Texas, hereby amends the "City Zoning Ordinance" by amending the Official Zoning Atlas To rezone from Agriculture (AG) to Residential Single-Family (R-1) for an approximate 105.29 acres and Commercial Corridor (CC) for an approximate 14.67 acres to allow a single-family residential development and commercial development on a tract containing 119.96 acres of land out of a 239.92 acre tract (called the West 239.48 acres), out of Tract 40, Paredes Partition Tract, Subdivision "E", in Share 19 of the Espiritu Santo Grant, Cameron County, Texas, located at 1 West Paredes Line Road, Brownsville, Texas 78566.

Section 2. That all provisions of the City of Brownsville Unified Development Code are incorporated herein by reference and declared to be a part hereof; and that this ordinance shall become effective on the earliest date allowed by law.

INTRODUCED at a public hearing on **July 21, 2026**. Passed at First Reading on **July 21, 2026**. PASSED at Second and Final Reading and ADOPTED, APPROVED, and ENACTED on **August 4, 2026**.

(SEAL)

BY: _____
John Cowen Jr.
Mayor

ATTEST: _____
Mayra Rios
City Secretary

STAFF REPORT

Planning & Redevelopment Department
Zoning Division
1034 E. Levee St. 2nd Floor
Brownsville, TX 78520
(956) 548-6150

APPLICATION DETAILS

Applicant/Representative: Henry Corona
Property Address: 1 West Paredes Line Road
Application Type: Rezone
Current Zoning: Agriculture (AG)

Application Date: June 2, 2026
CC Meeting Dates: 1st – July 21, 2026 / 2nd August 4, 2026
Overlay(s): None
No. of Mail-outs: 8

Geo ID: 79-1900-0400-0100-00
Case No.: 235-2026-015
Proposed Use: Single Family Residential Development
Proposed Zoning: Residential Single Family (R-1) and Corridor Commercial (CC)
P&Z Date: July 9, 2026
Electoral District: 3
Annexation Year: 1999
Opposition: No Verbal or Written Opposition

PROPERTY DETAILS

Legal Description: 119.96 acres of land out of a 239.92 acre tract (called the West 239.48 acres), out of Tract 40, Paredes Partition Tract, Subdivision "E", in Share 19 of the Espiritu Santo Grant,, Cameron County, Texas, located 1 West Paredes Line Road, Brownsville, Texas 78566.
Roadway Frontage: The subject property is fronting Paredes Line Road, a Primary Arterial.
Predominant Land Use: The predominant land use is mostly undeveloped land or agricultural.

ABUTTING LAND USES (*SEE ATTACHED AERIAL VIEW MAP)*

North: Undeveloped Land, Extra Territorial Jurisdiction (ETJ)
East: Undeveloped Land
South: Undeveloped Land (Future Single Family Residential Development)
West: Undeveloped Land , Extra Territorial Jurisdiction (ETJ)

EXISTING ZONING DESIGNATIONS (*SEE ATTACHED ZONING MAP)*

North: Extra Territorial Jurisdiction (ETJ)
East: Agriculture (AG)
South: Residential Single Family (R-1), Corridor Commercial (CC)
West: Extra Territorial Jurisdiction (ETJ)

FUTURE LAND USE PLAN (*SEE ATTACHED FUTURE LAND USE MAP)*

The City of Brownsville Future Land Use Plan indicates that the subject land is located within the Water Management District. Land use within the Water Management District should be primarily community facilities, with a very small portion of residential land uses permitted. It is the opinion of staff that the request is not consistent with the Future Land Use Plan. However, previous residential developments at proposed scale have been approved in the past to expand housing options and provide neighborhood scale commercial uses in this mostly undeveloped area of the city.

REVIEW CRITERIA

After an analysis of the subject property and its surrounding context, staff has determined that the proposed zoning and associated use would be compatible with the adjacent zoning districts and land uses, and would not place significant or undue strain on existing public infrastructure, including water, wastewater, and transportation systems.

STAFF RECOMMENDATION

Based upon the analysis presented in this report and observations from the Planning & Redevelopment Department, staff recommends approval of the zoning change request from Agriculture (AG) District to Residential Single Family (R-1) and Corridor Commercial (CC).

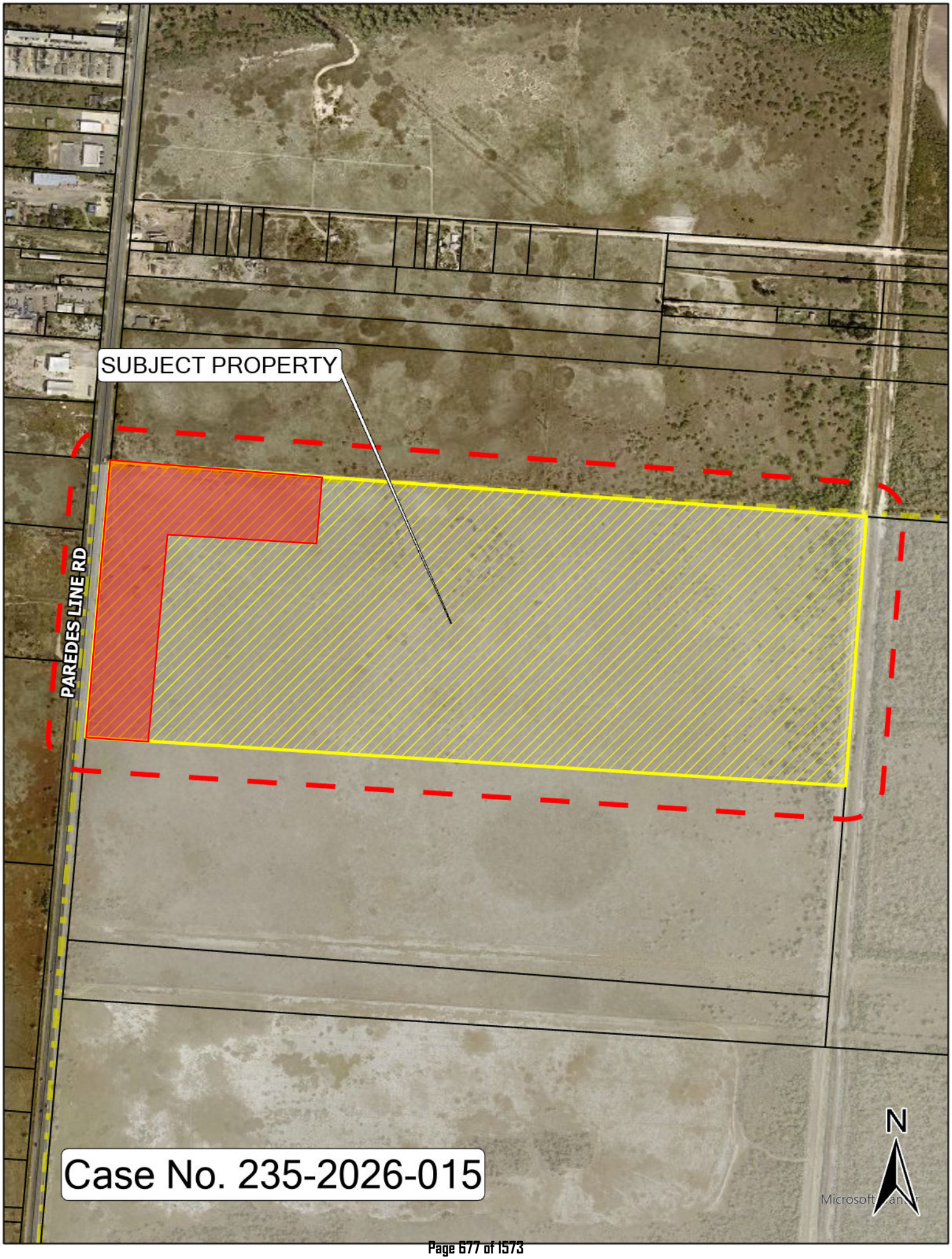
SUBJECT PROPERTY
PAREDES LINE RD
Case No. 235-2026-015
N

City of Brownsville Zoning Map

Zoning Districts

- AG - Agricultural
- RE - Residential Estate
- R-1 - Residential Single Family
- R-2 - Residential Suburban
- R-3 - Residential Transition
- TN - Traditional Neighborhood
- TN-MU - Traditional Neighborhood Mixed Use
- TN-C - Traditional Neighborhood Corridor
- DE - Downtown Edge
- DG - Downtown General
- DC - Downtown Core
- CC - Corridor Commercial
- RC - Reginal Center
- LI - Ligtht Industrial
- HI - Heavy Industrial

EXHIBIT "A"

Address:
1 W Paredes Line Rd,
Brownsville, Texas, 78526

Proposed Zoning:
Residential Single Family (R-1) and
Commercial Corridor (CC)
Current Zoning:
Agricultural, AG

Brownsville Electoral District #3

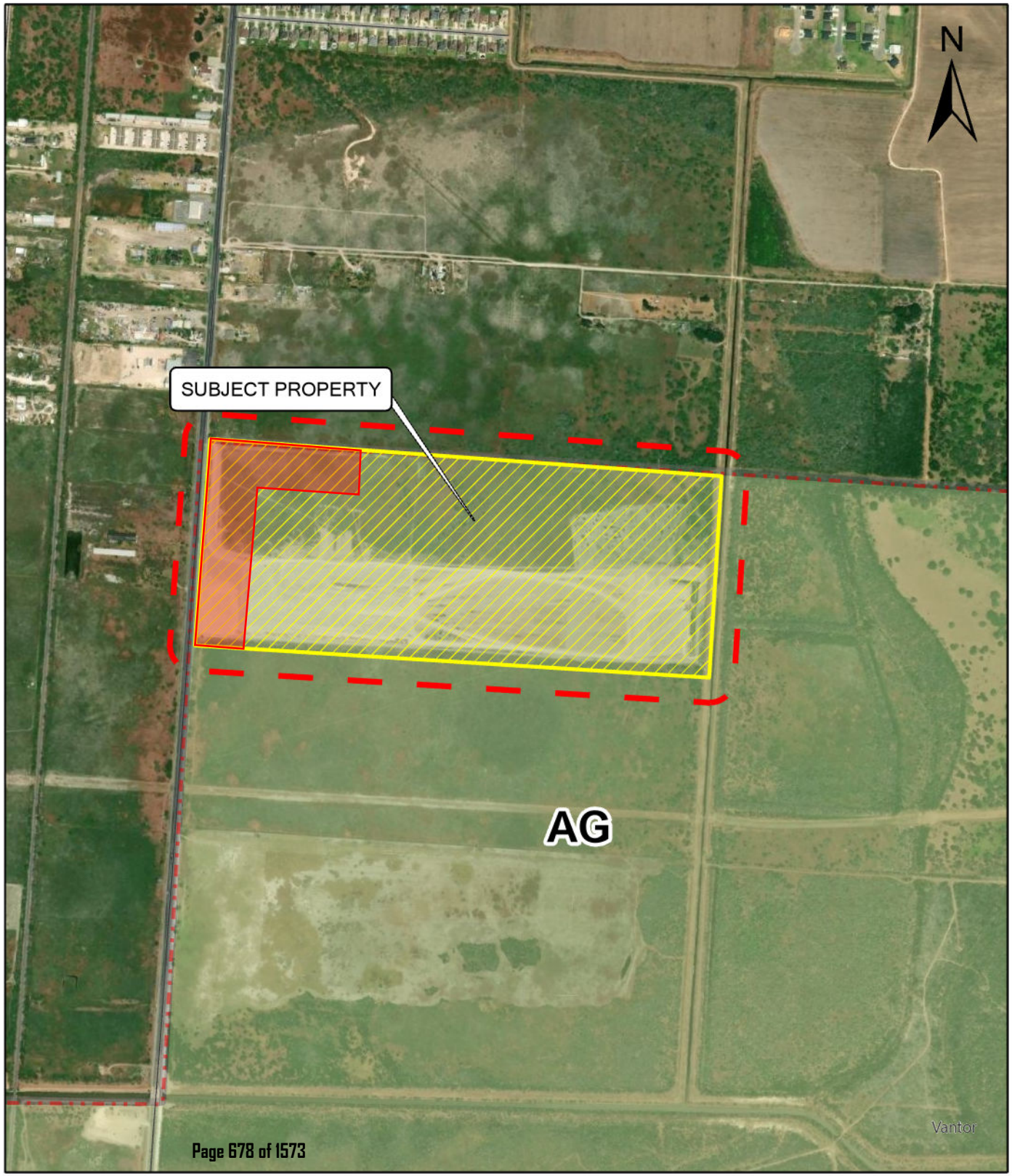

FUTURE LAND USE PLAN

DISTRICTS

- Core Central
- Core East
- Core West
- Downtown Enterprise
- Downtown Riverside
- Emerging City Central
- Emerging City East
- Emerging City West
- Employment Hub
- Future Employment Hub
- Reserve Future City
- Transition Central
- Transition East
- Transition West
- Water Management

NODES

- Downtown Node
- Primary Regional Node
- Secondary Regional Node
- Sub Regional Node

CORRIDORS

- Gateway Corridor
- Linkage Corridor
- Loop Corridor
- Town Corridor
- Centerlines

Zoning Case No.
235-2026-015

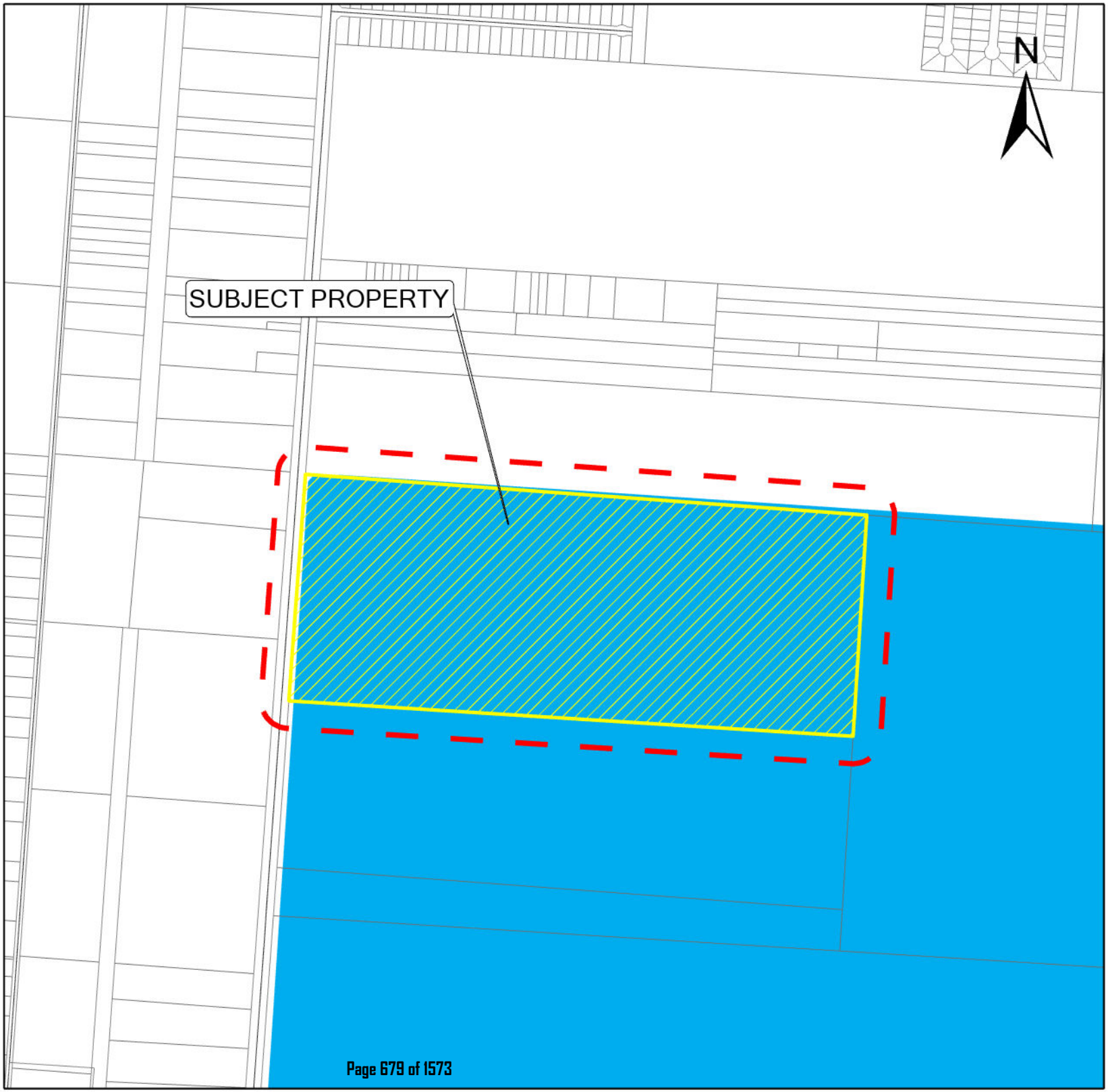

To:	Mayor and City Commission
Through:	Alan Guard, Interim City Manager
From:	Martin Vega, Assistant Director of Land Development Services
Date:	Tuesday, July 21, 2026
Agenda #:	Public Hearing and **ACTION** on **FIRST READING** on **Ordinance Number 235-2026-016**, to rezone from Residential Single-Family (R-1) and Traditional Neighborhood Corridor (TNC) to Traditional Neighborhood Corridor (TNC) to allow a multifamily development for 2.00 acres of land, more or less, comprised of Tract 1, being 0.37 acres of land; and Tract 2, being 1.63 acres of land, both Tracts out of Block 4, El Jardin Subdivision, Share 27 of the Espiritu Santo Grant, Cameron County, Texas, located at 970 South Central Avenue, Brownsville, Texas 78521, as shown in Exhibit "A". (District 1) (Planning & Redevelopment Department)

Summary:

Property owner, Cirilo Zuniga (MF Builders, LLC.), proposes to change the Zoning Designation for 2.00 acres of land, more or less, comprised of Tract 1, being 0.37 acres of land; and Tract 2, being 1.63 acres of land, both Tracts out of Block 4, El Jardin Subdivision, Share 27 of the Espiritu Santo Grant, Cameron County, Texas, located at 970 South Central Avenue, Brownsville, Texas 78521. The applicant requests to rezone the subject property from Residential Single-Family (R-1) and Traditional Neighborhood Corridor (TNC) to Traditional Neighborhood Corridor (TNC) to allow a multifamily development.

The predominant land use in the surrounding area is single-family dwellings. Additional uses such as undeveloped land, mobile home park, duplex, and multifamily dwelling are present within the vicinity.

The property is located within the Transition East District. The proposed use/zoning designation is not consistent with the Future Land Use Map; however, this request is consistent with the mix of multifamily residential developments in the area.

Project Scope and Analysis:

The subject property, whose total area is 2.00 acres, is comprised of two tracts, one with 0.37 acres and the other having an area of 1.63 acres. This request to rezone was petitioned by the property owner to establish the Traditional Neighborhood Corridor (TNC) zoning to accommodate the proposed multi-family use. The Residential Single-Family (R-1) district only permits single-family homes on lots that have a minimum area of 5,000 square feet. Under the new zoning designation, a density of up to 30 units per acre will be permitted.

Funding:

Source: Fiscal Dept. Approval Not Required

Amount: N/A

Local Contribution if Applicable: N/A

Recommendation:

There was no written or verbal opposition at the Planning and Zoning Commission meeting on July 9, 2026. The Planning & Zoning Commission recommends approval for this rezoning from Residential Single-Family (R-1) and Traditional Neighborhood Corridor (TNC) to Traditional Neighborhood Corridor (TNC).

Commission Pillar:

Planning & Zoning

Attachments:

1. First Reading Zoning Case 7092026 UPDATED
2. Case 235-2026-016 Binder

Planning and Redevelopment Department
Zoning Division
1034 E. Levee St. 2nd Floor
Brownsville, TX 78520
(956) 548-6150

First Reading Zoning Cases

CITY COMMISSION HEARING DATE: JULY 21, 2026

Case Number	*Electoral District*	*Application Type*	*Property Address*	*Applicant/ Representative Name*	*Zoning Change*	*Reason for Request*	*Opposition*
235-2026-014-S	4	Specific Use Permit (SUP)	1247 East Madison Street	1247 E. Madison, LLC	To request a Specific Use Permit (SUP) in Downtown Edge (DE)	To allow an event center	No verbal or written opposition
235-2026-015	3	Rezone	1 West Paredes Line Road	Sattva Investments, LLC./Sashi Sachdev	To rezone from Agriculture (AG) to Residential Single-Family (R-1) and Commercial Corridor (CC)	To allow a single-family residential development and a commercial development	No verbal or written opposition
235-2026-016	1	Rezone	970 South Central Avenue	MF Builders, LLC./ Cirilo Zuniga	To rezone from Residential Single-Family (R-1) and Traditional Neighborhood Corridor (TN-C) to Traditional Neighborhood Corridor (TN-C)	To allow a multifamily development	No verbal or written opposition

ORDINANCE NUMBER 235-2026-016

AN ORDINANCE AMENDING THE "CITY ZONING ORDINANCE" BY AMENDING THE OFFICIAL ZONING ATLAS TO REZONE FROM RESIDENTIAL SINGLE-FAMILY (R-1) AND TRADITIONAL NEIGHBORHOOD CORRIDOR (TNC) TO TRADITIONAL NEIGHBORHOOD CORRIDOR (TNC) TO ALLOW A MULTIFAMILY DEVELOPMENT FOR 2.00 ACRES OF LAND, MORE OR LESS, COMPRISED OF TRACT 1, BEING 0.37 ACRES OF LAND; AND TRACT 2, BEING 1.63 ACRES OF LAND, BOTH TRACTS OUT OF BLOCK 4, EL JARDIN SUBDIVISION, SHARE 27 OF THE ESPIRITU SANTO GRANT, CAMERON COUNTY, TEXAS, LOCATED AT 970 SOUTH CENTRAL AVENUE, BROWNSVILLE, TEXAS 78521; AND DEALING WITH RELATED MATTERS INCLUDING $2000 PENALTIES.

WHEREAS, this ordinance is in accordance with the City's comprehensive plan; is consistent with the existing zoning surrounding the area to be rezoned; and bears a substantial relationship to the public health, safety, morals or general welfare; and all procedural requirements for the passage hereof have been met;

Be It Ordained by the City of Brownsville:

Section 1. That the City Commission of the City of Brownsville, Texas, hereby amends the "City Zoning Ordinance" by amending the Official Zoning Atlas To rezone from Residential Single-Family (R-1) and Traditional Neighborhood Corridor (TNC) to Traditional Neighborhood Corridor (TNC) to allow a multifamily development for 2.00 acres of land, more or less, comprised of Tract 1, being 0.37 acres of land; and Tract 2, being 1.63 acres of land, both Tracts out of Block 4, El Jardin Subdivision, Share 27 of the Espiritu Santo Grant, Cameron County, Texas, located at 970 South Central Avenue, Brownsville, Texas 78521, Brownsville, Texas 78566.

Section 2. That all provisions of the City of Brownsville Unified Development Code are incorporated herein by reference and declared to be a part hereof; and that this ordinance shall become effective on the earliest date allowed by law.

INTRODUCED at a public hearing on **July 21, 2026**. Passed at First Reading on **July 21, 2026**. PASSED at Second and Final Reading and ADOPTED, APPROVED, and ENACTED on **August 4, 2026**.

(SEAL)

BY: _____
John Cowen Jr.
Mayor

ATTEST: _____
Mayra Rios
City Secretary

STAFF REPORT

Planning & Redevelopment Department
Zoning Division
1034 E. Levee St. 2nd Floor
Brownsville, TX 78520
(956) 548-6150

APPLICATION DETAILS

Applicant/Representative: Cirilo Zuniga
Property Address: 970 S Central Ave
Application Type: Rezone
Current Zoning: Residential Single Family (R-1) and Traditional Neighborhood (TN-C)
Application Date: June 4, 2026
CC Meeting Dates: 1st – July 21, 2026 / 2nd August 4, 2026
Overlay(s): None
No. of Mail-outs: 24

Geo ID: 02-7910-0040-1036-00
Case No.: 235-2026-016
Proposed Use: Multifamily Development
Proposed Zoning: Traditional Neighborhood (TN-C)

P&Z Date: July 9, 2026
Electoral District: 1
Annexation Year: 1930-1964
Opposition: No Verbal or Written Opposition

PROPERTY DETAILS

Legal Description: 2.00 acres of land, more or less, comprised of Tract 1, being 0.37 acres of land; and Tract 2, being 1.63 acres of land, both Tracts out of Block 4, El Jardin Subdivision, Share 27 of the Espiritu Santo Grant, Cameron County, Texas, located 970 S Central Ave, Brownsville, Texas 78521.
Roadway Frontage: The subject property is fronting Waco Road, a Local Street, and S Central Ave, a Collector.
Predominant Land Use: The predominant land use is mostly a mix of single family and multifamily residential.

ABUTTING LAND USES (*SEE ATTACHED AERIAL VIEW MAP)*

North: Single Family Residential, Multifamily Residential
East: Single Family Residential, Multifamily Residential
South: Grandfathered RV Park, Multifamily Residential
West: Single Family Residential, Undeveloped Land

EXISTING ZONING DESIGNATIONS (*SEE ATTACHED ZONING MAP)*

North: Residential Single Family (R-1), Residential Transition (R-3), Traditional Neighborhood Corridor (TN-C)
East: Traditional Neighborhood Corridor (TN-C),
South: Traditional Neighborhood Corridor (TN-C)
West: Residential Single Family (R-1), Residential Suburban (R-2)

FUTURE LAND USE PLAN (*SEE ATTACHED FUTURE LAND USE MAP)*

The City of Brownsville Future Land Use Plan indicates that the subject land is located within the Transition East District. Land uses in the East Transition District should be approximately half residential, with the remaining uses a balance of community facilities, commercial, institutional, and industrial land uses. Residential uses should be mostly single family homes on a variety of lot sizes, with an average density of 2 dwelling units per acre. It is the opinion of staff that the request is not consistent with the Future Land Use Plan. However, this request is consistent with the mix of multifamily residential developments in the area.

REVIEW CRITERIA

After an analysis of the subject property and its surrounding context, staff has determined that the proposed zoning and associated use would be compatible with the adjacent zoning districts and land uses, and would not place significant or undue strain on existing public infrastructure, including water, wastewater, and transportation systems.

STAFF RECOMMENDATION

Based upon the analysis presented in this report and observations from the Planning & Redevelopment Department, staff recommends approval of the zoning change request from Residential Single-Family (R-1) and Traditional Neighborhood Corridor (TNC) to Traditional Neighborhood Corridor (TNC)

AGUILA DR
HAGGAR DR
LEECE DR
SUBJECT PROPERTY
WACO RD
S CENTRAL AVE
N
Case No. 235-2026-016

City of Brownsville Zoning Map

Zoning Districts

- AG - Agricultural
- RE - Residential Estate
- R-1 - Residential Single Family
- R-2 - Residential Suburban
- R-3 - Residential Transition
- TN - Traditional Neighborhood
- TN-MU - Traditional Neighborhood Mixed Use
- TN-C - Traditional Neighborhood Corridor
- DE - Downtown Edge
- DG - Downtown General
- DC - Downtown Core
- CC - Corridor Commercial
- RC - Reginal Center
- LI - Ligtht Industrial
- HI - Heavy Industrial

EXHIBIT "A"

Address:
970 S Central Ave,
Brownsville, Texas, 78521

Proposed Zoning:
Traditional Neighborhood Corridor, TN-C

Current Zoning:
Traditional Neighborhood Corridor (TN-C)
and Residential Single Family (R-1)

Brownsville Electoral District #1

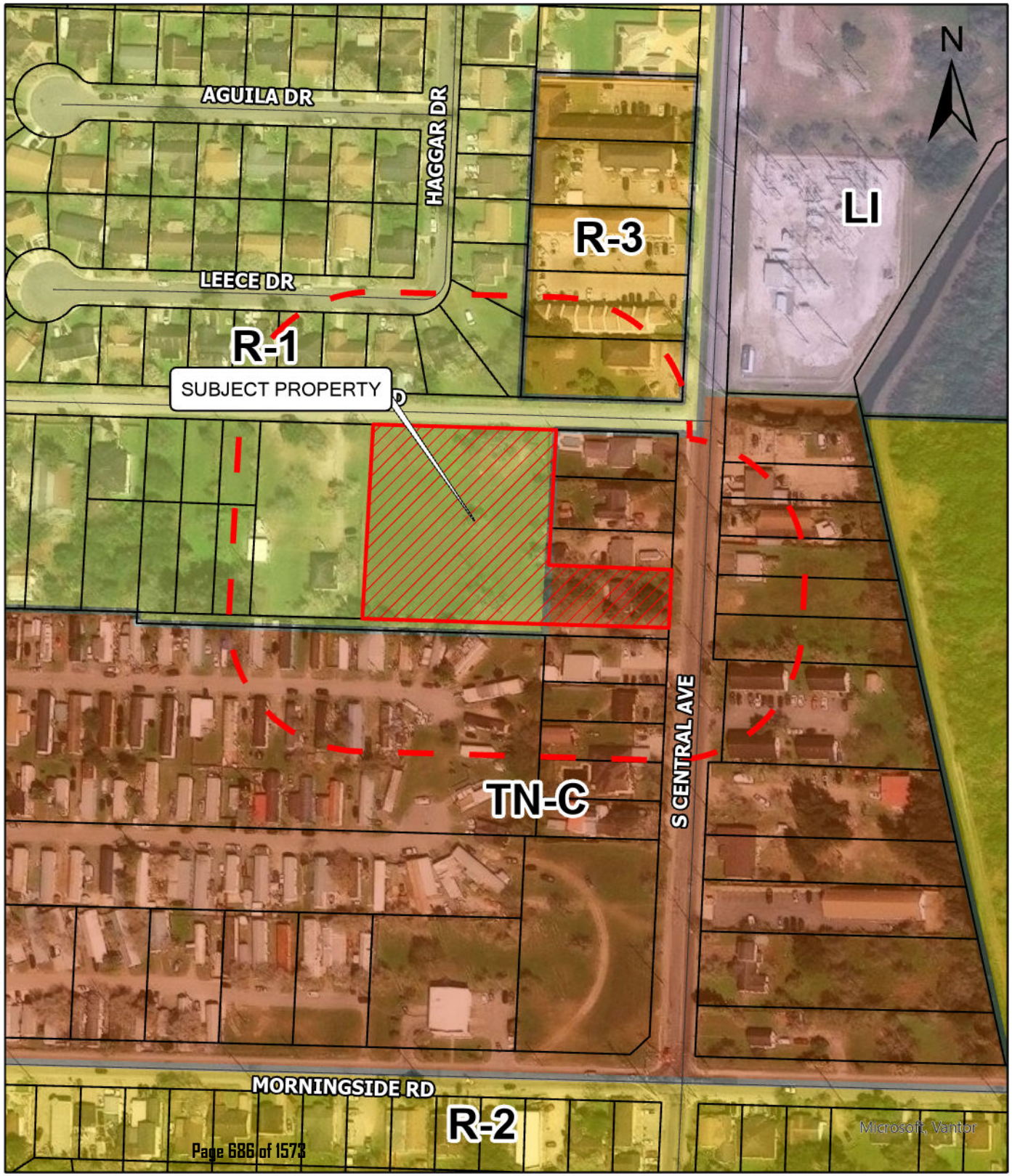

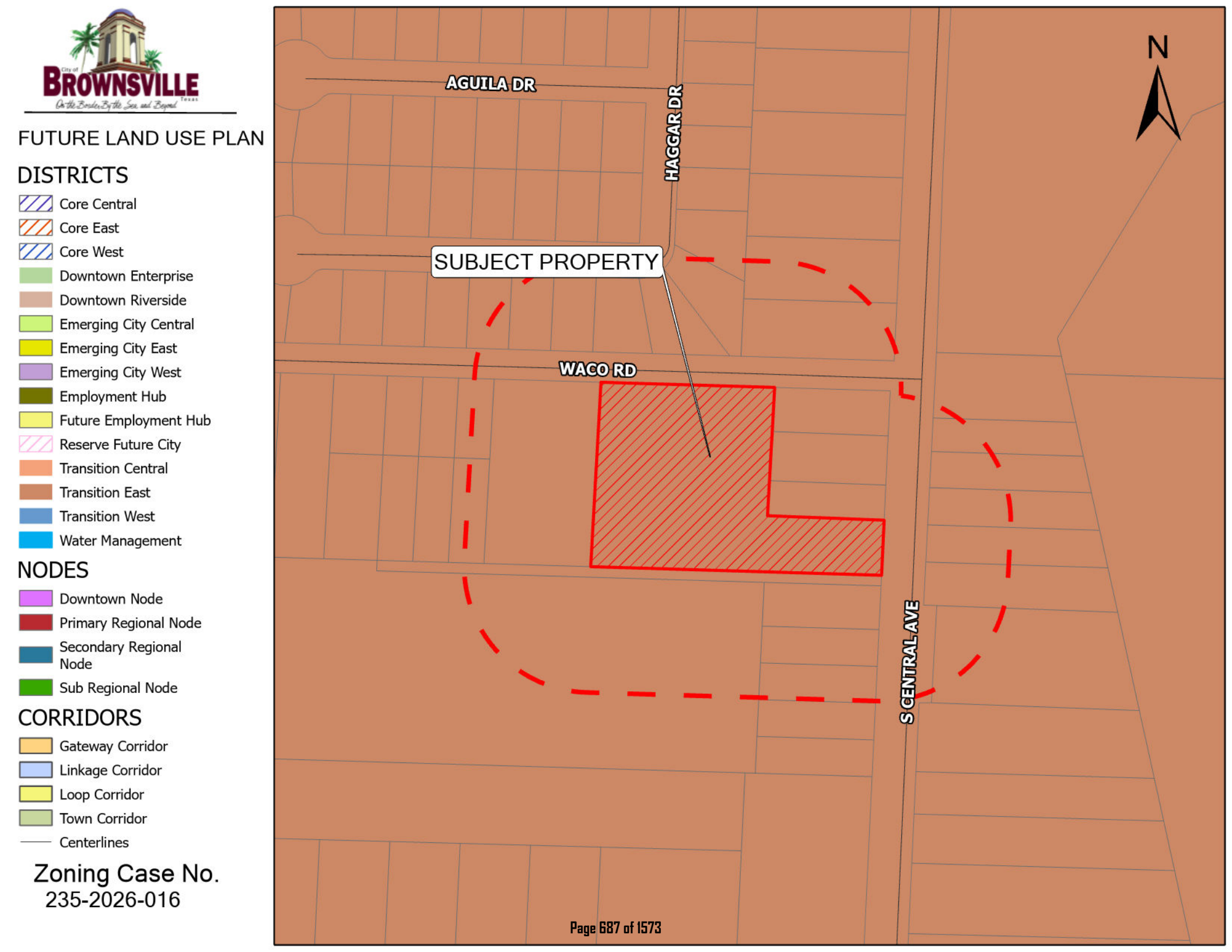

FUTURE LAND USE PLAN

DISTRICTS

- Core Central
- Core East
- Core West
- Downtown Enterprise
- Downtown Riverside
- Emerging City Central
- Emerging City East
- Emerging City West
- Employment Hub
- Future Employment Hub
- Reserve Future City
- Transition Central
- Transition East
- Transition West
- Water Management

NODES

- Downtown Node
- Primary Regional Node
- Secondary Regional Node
- Sub Regional Node

CORRIDORS

- Gateway Corridor
- Linkage Corridor
- Loop Corridor
- Town Corridor
- Centerlines

Zoning Case No.
235-2026-016

To:	Mayor and City Commission
Through:	Alan Guard, Interim City Manager
From:	Will Trevino, City Attorney
Date:	Tuesday, July 21, 2026
Agenda #:	Public Hearing and **ACTION** on **FIRST READING** of **Ordinance Number 2026-1811** accepting and approving an update to the Paseo De La Resaca Lighting and Landscaping Maintenance Public Improvement District (PID) Operations and Maintenance Service and Assessment Plan; accepting and approving the updated assessment roll for the PID; making a finding of special benefit to property within the PID; levying special assessments against such property and establishing a lien on such property; providing for the method of assessment and the payment of the assessments levied against the PID assessed property; providing penalties and interest on delinquent Assessments; in accordance with Chapter 372 of the Texas Local Government Code, as amended. (Paseo PID Board)

Summary:
The Paso PID Board met and recommended reducing the PID assessment levy from $0.15 to $0.10 per $100 of valuation. A public hearing is required as well as adoption of the levy by ordinance.

Project Scope and Analysis:

Funding:

Source: Not Applicable

Amount:

Local Contribution if Applicable:

Recommendation:
Staff recommends reviewing the SAP update and adopting an assessment level.

Commission Pillar:

Economic Development, Planning & Zoning, Infrastructure, Public Safety, Quality of Life & Vibrancy, Governance

Attachments:
None

To:	Mayor and City Commission
Through:	Alan Guard, Interim City Manager
From:	Will Trevino, City Attorney
Date:	Tuesday, July 21, 2026
Agenda #:	Public Hearing and **ACTION** on **FIRST READING** on **Ordinance Number 2026-1813**, amending Chapter 54, Health and Sanitation, Article VI, Smoking in Public Places, to modify regulations related to smoking in public places to include e-cigarettes and other electronic nicotine delivery system devices, such as vapes, and regulations related to smoking in outside patios. (Office of the City Attorney)

Summary:

Project Scope and Analysis:

Funding:

Source: Not Applicable

Amount:

Local Contribution if Applicable:

Recommendation:
Staff recommends adoption.

Commission Pillar:
Economic Development, Planning & Zoning, Public Safety, Quality of Life & Vibrancy, Governance

Attachments:
1. Ordinance 2025-1813 re Smoking in Public Places
2. Smoking-Bans-Fact-Sheet

CITY OF BROWNSVILLE
ORDINANCE NO. 2026-1813

AN ORDINANCE OF THE CITY COMMISSION OF THE CITY OF BROWNSVILLE, TEXAS, AMENDING CHAPTER 54, HEALTH AND SANITATION, OF THE CITY OF BROWNSVILLE CODE OF ORDINANCES, TO AMEND ARTICLE VI, SMOKING IN PUBLIC PLACES, TO MODIFY REGULATIONS RELATED TO SMOKING IN PUBLIC PLACES TO INCLUDE E-CIGARETTES AND OTHER ELECTRONIC NICOTINE DELIVERY SYSTEM DEVICES, SUCH AS VAPES, AND REGULATIONS RELATED TO SMOKING IN OUTSIDE PATIOS; ADOPTING CIVIL AND CRIMINAL PENALTIES; PROVIDING SAVINGS, REPEALING AND SEVERABILITY CLAUSES; AND PROVIDING AN EFFECTIVE DATE.

WHEREAS, the City of Brownsville, Texas (the "City") is a Home Rule Municipality acting under its Charter adopted by the electorate pursuant to Article XI, Section 5 of the Texas Constitution and Chapter 9 of the Texas Local Government Code; and

WHEREAS, the City is authorized by Texas Local Government Code §51.001 to adopt or amend any ordinance that is for the good government, peace, or order of the municipality or for the trade and commerce of the municipality; and

WHEREAS, Chapter 54 of the Texas Local Government Code authorizes the City to adopt a fine or penalty for the violation of a rule, ordinance, or other police regulation; and

WHEREAS, Section 54.004 allows the City to enforce ordinances necessary to protect health, life, and property, and to preserve the good government, order, and security of the municipality and its inhabitants; and

WHEREAS, studies undertaken across the country indicate that there is no significant adverse economic impact as a result of indoor smoking bans; and

WHEREAS, cumulative scientific data indicate that smokers face a higher risk of developing lung cancer, nonsmokers are at risk as well, especially if exposed to secondhand smoke. Exposure to secondhand smoke claims the lives of nearly 50,000 nonsmoking adults each year, most notably from lung cancer, stroke, and heart disease; and

WHEREAS, exposure to secondhand smoke increases the risk of being diagnosed with lung cancer by 20-30%; and

WHEREAS, according to the American Nonsmokers' Rights Foundation, 28 states – as well as Puerto Rico, District of Columbia, and the U.S. Virgin Islands – are "smoke-free states," meaning they do not allow smoking in bars, restaurants, and non-hospitality workplaces; however, Texas does not currently have a statewide smoking ban; and

WHEREAS, in Texas, 46% of municipalities are covered by a smoke-free ordinance that covers municipal and private non-hospitality worksites, restaurants, and bars; and

WHEREAS, there are currently 106 Texas municipalities with a "comprehensive" smoking ban, meaning that the city is entirely smoke-free in non-hospitality workplaces, restaurants, and bars; and

WHEREAS, the City Commission acknowledged these studies and as such adopted Ordinance Number 2012-1556 on December 4, 2012, codified as Article VI of Chapter 54 of the Brownsville Code of Ordinances that prohibited smoking in all enclosed public places within the City, including restaurants, bars, and other specified locations, as well as in outdoor seating or serving areas of restaurants and within 20 feet thereof; and

WHEREAS, the City's Code of Ordinances defines smoking as inhaling, exhaling, burning, or carrying any lighted or heated cigar, cigarette, or pipe, and does not currently address the use of e-cigarettes or electronic nicotine delivery systems within the scope of existing prohibitions; and

WHEREAS, the Texas Health and Safety Code section 161.081 defines an e-cigarette to include an electronic cigarette or any other device that simulates smoking by using a mechanical heating element, battery, or electronic circuit to deliver nicotine or other substances to the individual inhaling from the device, as well as any consumable liquid solution or other material aerosolized or vaporized during use, including components, parts, or accessories; and

WHEREAS, aligning the regulation of e-cigarette use with existing smoking prohibitions in restaurants and other covered locations will provide clear, consistent protections for the public, employees, and vulnerable populations within enclosed public places, places of employment, and specified outdoor areas already subject to smoking restrictions; and

WHEREAS, the City Commission has the authority and finds it necessary to amend Article VI, Smoking in Public Places, to expressly prohibit the use of e-cigarettes in restaurants and all areas where smoking is currently prohibited, in order to promote and protect the public health, safety, and welfare; and

WHEREAS, the City Commission of the City of Brownsville has reviewed the proposed changes and finds them to be necessary and appropriate; and

WHEREAS, after complying with all legal notices, requirements, and conditions, a public hearing was held before the City Commission at which the City Commission considered the requested amendments, and the City Commission does hereby find that the amendments herein accomplish such objectives of promoting the public health, safety, morals, or general welfare, and protecting and preserving places and areas of historical, cultural, or architectural importance and significance within the City; and

WHEREAS, this ordinance contains regulations consistent with sound business practices and good governance to address the adverse impacts of smoking in public spaces while preserving public health and safety.

NOW, THEREFORE, BE IT ORDAINED BY THE CITY COMMISSION OF THE CITY OF BROWNSVILLE, TEXAS:

Section 1. Incorporation of Premises. The findings and recitals set forth in City of Brownsville Ordinance Number 2012-1556, concerning municipal authority, public process, and public health impacts related to smoking in public places and the above and foregoing premises related to e-cigarettes

are true and correct and are incorporated herein and made a part hereof for all purposes as the legislative findings of the City Commission.

Section 2. Amendments. Chapter 54, Health and Sanitation, Article VI, Smoking in Public Places, is amended as shown in Exhibit "A" attached hereto and incorporated herein for all purposes with deletions in strikethrough text and additions in underline text.

Section 3. Penalty Clause. Any person violating any provision of this Ordinance shall be guilty of a misdemeanor and, upon conviction, shall be fined an amount as prescribed in section 1-13, General Penalty, of this code. Each day that such a violation continues shall be a separate offense. Prosecution or conviction under this Ordinance shall never be a bar to any other remedy or relief for violations of this Ordinance.

Section 4. City Code of Ordinance Revisions. The publisher of the City's Code of Ordinances is hereby authorized to revise the Code of Ordinances to reflect changes provided for in this Ordinance; to correct typographical errors where necessary; and to format and number paragraphs to conform to the existing City's Code of Ordinances.

Section 5. Savings/Repealing Clause. All provisions of any ordinance in conflict with this Ordinance are hereby repealed to the extent they are in conflict; but such repeal shall not abate any pending prosecution for violation of the repealed ordinance, nor shall the repeal prevent a prosecution from being commenced for any violation if occurring prior to the repeal of the ordinance. Any remaining portions of said ordinances shall remain in full force and effect.

Section 6. Severability. Should any section, subsection, sentence, clause, phrase of this Ordinance be declared unconstitutional or invalid by a court of competent jurisdiction, it is expressly provided that any and all remaining portions of this Ordinance shall remain in full force and effect. Brownsville hereby declares that it would have passed this Ordinance, and each section, subsection, sentence, clause or phrase thereof irrespective of the fact that any one or more sections, subsections, sentences, clauses and phrases be declared unconstitutional or invalid.

Section 7. Effective Date. Pursuant to the City Charter, this Ordinance shall become effective upon its second and final reading and passage.

Section 8. Open Meetings. That it is hereby found and determined that the meeting at which this Ordinance was passed was open to the public as required by law, and that public notice of the time, place and purpose of said meeting was given, all as required by Article 551.041, Texas Government Code.

INTRODUCED and PASSED at a PUBLIC HEARING and FIRST READING on the 21st day of July, 2026.

APPROVED AND PASSED at a PUBLIC HEARING and on the SECOND and FINAL READING on this the 4th day of August, 2026.

_____

John Cowen, Jr.
Mayor

ATTEST:

Mayra Rios, TRMC
City Secretary

APPROVED AS TO FORM AND LEGALITY:

Guillermo (Will) S. Trevino
City Attorney

Exhibit "A"

PART II - CODE OF ORDINANCES
Chapter 54 - HEALTH AND SANITATION
ARTICLE VI. SMOKING IN PUBLIC PLACES

Smoking Bans

While smokers face a higher risk of developing lung cancer, nonsmokers are at risk as well, especially if exposed to secondhand smoke. Exposure to secondhand smoke claims the lives of nearly 50,000 nonsmoking adults each year, most notably from lung cancer, stroke, and heart disease. Due to the severe health consequences related to secondhand smoke, smoking bans are important. According to the American Nonsmokers' Rights Foundation, 28 states – as well as Puerto Rico, District of Columbia, and the U.S. Virgin Islands – are "smoke-free states," meaning they do not allow smoking in bars, restaurants, and non-hospitality workplaces. Texas does not currently have a statewide smoking ban, but many cities throughout the state have smoking bans in place.

Statistics

- About **7,300 people in the U.S. will die** from lung cancer caused by exposure to secondhand smoke each year.
- Exposure to **secondhand smoke increases the risk** of being diagnosed with lung cancer by **20-30%**.
- In Texas, **46% of municipalities** are covered by a **smoke-free ordinance** that covers municipal and private non-hospitality worksites, restaurants, and bars.
- There are currently **106 Texas municipalities with a "comprehensive" smoking ban**, meaning that the city is entirely smoke-free in non-hospitality workplaces, restaurants, and bars.

States and Territories with Comprehensive Smoking Bans

- Arizona
- California*
- Colorado*
- Connecticut
- Delaware
- Hawaii
- Illinois
- Iowa
- Kansas
- Maine
- Maryland
- Massachusetts
- Michigan**
- Minnesota
- Montana
- Nevada*
- Nebraska
- New Jersey
- New Mexico
- New York
- North Dakota
- Ohio
- Oregon
- Puerto Rico
- Rhode Island
- South Dakota
- U.S. Virgin Islands
- Utah
- Vermont
- Washington
- Wisconsin

*Smokefree Law has certain exemptions for marijuana smoking in 100% Smokefree Restaurants
**Smokefree Law has certain exemptions for marijuana smoking in 100% Smokefree Restaurants and Bars

Comprehensive Smoking Bans in Texas

- Abilene
- Alamo
- Alton
- Anthony
- Arlington
- Austin
- Baytown
- Beaumont
- Beeville
- Benbrook
- Bonham
- Brookshire
- Brownsville
- Bryan
- Burkburnett
- College Station
- Combes
- Copperas Cove
- Corpus Christi
- Dallas
- DeSoto

- Del Rio
- Denison
- Donna
- Duncanville
- Eagle Pass
- Edinburg
- El Lago
- El Paso
- Elsa
- Ennis
- Farmers Branch
- Flower Mound
- Fort Worth
- Frisco
- Granbury
- Harlingen
- Henderson
- Hidalgo
- Highland Village
- Horizon City
- Horseshoe Bay
- Houston
- Humble
- Huntsville
- Jacinto City
- Kaufman
- Kilgore
- La Joya
- La Vernia
- Lacy-Lakeview
- Lake Dallas
- Lancaster
- Laredo
- Lufkin
- Lyford
- Marshall
- McAllen
- Mercedes
- Mesquite
- Mission
- Missouri City
- Mont Belvieu
- Nacogdoches
- New Braunfels
- Northlake
- Palmhurst
- Palmview
- Patton Village
- Pearland
- Penitas
- Pharr
- Plano
- Port Isabel
- Port Lavaca
- Prairie View
- Red Oak
- Rio Grande City
- Robinson
- Rosenburg
- San Angelo
- San Benito
- San Juan
- San Marcos
- Seagoville
- Socorro
- Southlake
- Spring Valley
- St. Paul
- Sugar Land
- Sullivan City
- Sunnyvale
- Tyler
- Universal City
- University Park
- Vernon
- Victoria
- Waco
- Waxahachie
- Weslaco
- Whitehouse
- Wichita Falls
- Wolfforth
- Woodway
- Yoakum

About Texas Oncology

With more than 550 physicians and 300 locations, Texas Oncology is an independent private practice, a member of The US Oncology Network, that sees more than 71,000 new cancer patients each year. Founded in 1986, Texas Oncology provides comprehensive, multidisciplinary care, and includes Texas Breast Specialists, Texas Center for Proton Therapy, Texas Colon & Rectal Specialists, Texas Imaging & Infusion Center, Texas Oncology Surgical Specialists and Texas Urology Specialists. Texas Oncology's robust community-based clinical trials and research program has contributed to the development of more than 100 FDA-approved cancer therapies. Learn more at TexasOncology.com.

Sources: American Cancer Society, American Nonsmokers' Rights Foundation, Centers for Disease Control and Prevention, and Texas Department of State Health Services

© 2025 Texas Oncology
Updated: 5/9/2025

TEXAS ONCOLOGY
More breakthroughs. More victories.®

To:	Mayor and City Commission
Through:	Alan Guard, Interim City Manager
From:	Will Trevino, City Attorney
Date:	Tuesday, July 21, 2026
Agenda #:	Public Hearing and **ACTION** on the following proposed Charter amendments for the Special Election to be held on November 3, 2026. (Charter Review Committee/ Office of the City Secretary/ Office of the City Attorney) (Items fell to the floor):

a. Amending Charter Art. V., Administrative Provisions, to modify Section 4. - Qualifications. (Adding tax delinquency or other liability due to City as a bar to holding office)
b. Amending Charter Art. V., Administrative Provisions, Section 3. - Vacancies (Adding automatic triggers for forfeiting office)
c. Amending Charter Art. V., Administrative Provisions, Section 3. - Vacancies (Adding discretionary triggers for forfeiting office)

Summary:
Local Government Code Sec. 9.004, regarding Charter Amendments for Home Rule Cities, specifies that the governing body of a municipality, on its own motion, may submit proposed charter amendments to the municipality's qualified voters for their approval at an election, and specifies that the Charter Amendment election be ordered by ordinance.

Provided herein are the recommendations provided by the Charter Review Committee to the City Commission. The City Commission considered these propositions at the July 7, 2026 City Commission meeting. However, these three propositions did not receive a vote and are said to have "fallen to the floor" or "died on the floor" under Robert's Rules of Order (RROR). Under the City Commission's rules and under RROR, the City Commission may bring the agenda item back for consideration if two Commissioners request the item on the agenda.

Staff is requesting a joint motion or individual motions for each item (a) through (c).

Project Scope and Analysis:

Funding:

Source: Not Applicable

Amount:

Local Contribution if Applicable:

Recommendation:

Staff recommends adopting or rejecting the propositions by either a motion covering items (a) through (c) or individually.

Commission Pillar:

Economic Development, Planning & Zoning, Infrastructure, Public Safety, Quality of Life & Vibrancy, Governance

Attachments:

None

To: Mayor and City Commission

Through: Alan Guard, Interim City Manager

From: Will Trevino, City Attorney

Date: Tuesday, July 21, 2026

Agenda #: Public Hearing and **ACTION** on **FIRST READING** on **Ordinance Number 2026-1812**, ordering and calling a Charter Election on proposed amendments, during the General Election on November 3, 2026, on the following amendments (Charter Review Committee/ Office of the City Secretary/ Office of the City Attorney):

a. Amending Charter Art. V., Administrative Provisions, Section 13 – Compensation (Address Mayor and City Commissioner's compensation)
b. Amending Charter Art. V., Administrative Provisions, to add 21-B. - Office of the City Secretary (Creating the Office of the City Secretary)
c. Amending Charter Art. V., Administrative Provisions, to add 21-C. - Office of the City Auditor (Creating the Office of the City Auditor)
d. Amending Charter Art. V., Administrative Provisions, Section 28A. Audit and oversight committee (Increasing the membership on the committee)
e. Amending Charter Art. V., Administrative Provisions, Section 28A. Audit and oversight committee (general clean-up)
f. Amending Charter Art. V., Administrative Provisions, to add Section 35, Municipal Campaign Finance (Requiring Commission to set campaign finance regulations by ordinance)
g. Amending Charter Art. V., Administrative Provisions, to add Section 35, Code of Ethics; Ethics Advisory Commission (Requiring Commission to create an Ethics Board and adopt rules for ethics by ordinance)
h. Amending Charter Art. VII., General Provisions, to add Section 3-A, - The Initiative (Adding initiative petition procedures for citizens)
i. Amending Charter Art. VII., General Provisions, to add Section 3-B, - Referendum (Adding referendum procedures for citizens)
j. Amending the Charter Art. V., Administrative Provisions, to add Section 22-B, Merit Hiring (Adding Merit principle hiring to City Charter)

k. Amending the Charter Art. I through VII, except Art. VI, Utilities Board, to revise or eliminate provisions that have been superseded by state law and to update or eliminate archaic language.

Summary:
Local Government Code Sec. 9.004, regarding Charter Amendments for Home Rule Cities, specifies that the governing body of a municipality, on its own motion, may submit proposed charter amendments to the municipality's qualified voters for their approval at an election, and specifies that the Charter Amendment election be ordered by ordinance.

The amendments contained herein were proposed and recommended by the Charter Review Committee. The Charter Review Committee met over five (5) public meetings where public hearings were held: May 11th (Chambers), June 1st (Chambers), June 8th (BEC), June 15th (BEC) and June 30th (BEC).

Recommended propositions by the Charter Review Committee were made to the City Commission at its meeting on July 7, 2026.

The first reading seeks to memorialize propositions as directed by the Commission, stylizing the ballot language and identifying how it currently reads in the charter and how it would read upon amendment. Please find attached an Ordinance pertaining to Charter Amendments. The deadline to order an election for November 3, 2026, is August 17, 2026.

Project Scope and Analysis:

Funding:

Source: General Fund

Amount: TBD

Local Contribution if Applicable:

Recommendation:
Staff recommends adopting the Ordinance.

Commission Pillar:
Economic Development, Planning & Zoning, Infrastructure, Public Safety, Quality of Life & Vibrancy, Governance

Attachments:
None

To:	Mayor and City Commission
Through:	Alan Guard, Interim City Manager
From:	Roberto Montalvo, Assistant Director Internal Services
Date:	Tuesday, July 21, 2026
Agenda #:	Consideration and **ACTION** to authorize a Contract with Ziwa Corporation in the amount of $3,909,970 for Contract No.196-26-ISD-RFP, for the HVAC Upgrades at the Brownsville Animal Regulation and Care Facility, as budgeted. (Internal Services Department)

Summary:

The Internal Services Department requests authorization to enter into a contract with Ziwa Corporation in the amount of $3,909,970 under Contract No. 196-26-ISD-RFP for HVAC upgrades at the Brownsville Animal Regulation and Care Center (BARCC). The project term is 268 working days.

This project will modernize the facility's HVAC infrastructure, improve ventilation and indoor air quality, enhance animal welfare conditions, increase system reliability, and provide long-term energy-efficient mechanical systems to support BARCC operations.

The Procurement Department conducted a Request for Competitive Sealed Proposals (RFCSP) in accordance with Texas Local Government Code. The solicitation was advertised publicly, and three proposals were received. Following evaluation by the committee, Ziwa Corporation ranked highest with a score of 81.73 points, followed by SKO Elite, LLC (81.20 points) and SpawGlass Contractors, Inc. (77.47 points). Evaluation results are provided in Exhibit A.

Key Details:

- Procurement Method: RFCSP
- Submittals Received: 3
- Vendor: Ziwa Corporation
- Contract Amount: $3,909,970
- Term: 268 working days

Project Scope and Analysis:

The Internal Services Department is initiating a major HVAC modernization project for the Brownsville Animal Regulation and Care Center (BARCC). The purpose is to upgrade and replace outdated mechanical equipment, improve ventilation and air quality, ensure regulatory compliance, and enhance indoor environmental conditions for both staff and animals. The project will provide a long-term, energy-efficient HVAC system designed to meet operational and animal-care standards.

BARCC's existing HVAC infrastructure is outdated and unable to reliably meet the ventilation and indoor air-quality needs of an animal care facility. Aging systems have led to increased maintenance costs, inconsistent temperature and humidity control, and diminished air quality—directly impacting animal health, staff comfort, and building operations.

Upgrading the HVAC system will create a safer, healthier, and more stable environment while reducing long-term operational and energy costs.

Project Scope

The scope of work includes:

- Modernization of BARCC's complete HVAC system.
- Replacement of aging, failing, or inefficient mechanical units.
- Upgrades to ventilation, filtration, and air handling equipment to meet animal welfare and safety requirements.
- Integration of energy-efficient mechanical systems to reduce operational costs.
- Improvements to reliability, temperature control, airflow distribution, and humidity management.
- Installation work and system commissioning to be completed within 268 working days.
- Compliance with all applicable building, mechanical, and safety codes.

Procurement and Evaluation Analysis

Procurement Method:

Request for Competitive Sealed Proposals (RFCSP), in compliance with:

- Texas Local Government Code Chapter 2269, Subchapter D (Construction – Competitive Sealed Proposals)
- Texas Local Government Code Chapter 252 (Procurement Requirements)
- Texas Government Code Chapter 2254 (Professional Services, if applicable)

Process:

- Solicitation was advertised publicly in a local newspaper.
- Documents were posted on the City's electronic bidding platform.
- Three qualified firms submitted proposals.

Evaluation:

The committee scored proposals based on published criteria including experience, methodology, cost, capacity, and technical approach.

- Ziwa Corporation ranked first with 81.73 points.
- SKO Elite, LLC ranked second with 81.20 points.
- SpawGlass Contractors, Inc. ranked third with 77.47 points.

Evaluation results are included as Exhibit A.

Contract and Financial Summary

- Contract Type: RFCSP – Construction Services

• Contract Amount: $3,909,970
• Base Term: 268 working days
• Approval authorizes the full contract value, including potential renewal options
• The City Manager will be authorized to execute renewals if exercised

Project Analysis
This project represents a critical investment in BARCC's infrastructure and operational readiness. By modernizing the HVAC system, the City will:
• Improve animal health and welfare conditions.
• Enhance ventilation and air-quality performance.
• Increase energy efficiency and reduce long-term utility costs.
• Ensure compliance with modern building and animal-care environmental standards.
• Strengthen facility reliability and operational continuity.
The competitive procurement process ensured a transparent and compliant selection, with Ziwa Corporation demonstrating the strongest overall capability for project delivery.

Funding:

Source: 810-9110-848-852

Amount: $3,909,970

Local Contribution if Applicable: N/A

Recommendation:

The Internal Services Department recommends that the City Commission authorize a contract with Ziwa Corporation under Request for Competitive Sealed Proposals (RFCSP), in an amount not to exceed $3,909,970, for a base term of 268 working days. This contract will support the HVAC modernization and upgrade project at the Brownsville Animal Regulation and Care Center (BARCC), improving system reliability, ventilation, air quality, and long-term energy efficiency.

Approval of this item will authorize the full contract value, including the renewal option. The City Manager will be authorized to execute any renewal(s) if exercised. Final form of the agreement shall be approved by the City Attorney.

Commission Pillar:

Infrastructure

Attachments:

1. 196-26-ISD-RFP - Contract - Ziwa Corporation
2. 196-26-ISD-RFP - Procurement Analysis

Contract Summary Form
Contract Number 196-26-ISD-RFP

Procurement Info	
Procurement Method:	**IFB, RFP, RFQ**
New Contract:	**Yes ☒ No ☐**
Advertisement Dates, if any:	**March 28, 2026 and April 4, 2026**
Award Date:	**Tuesday, July 7, 2026**
Contractor	
Vendor Name:	Ziwa Corporation
Address:	1952 S. Price Road Brownsville, TX 78521
Point of Contact / Project Manager*:	Jorge De La Garza – President
Phone Number:	(956)542-8167
Email Address:	jdlg@ziwacorp.com
City Contact Information	
Department:	**Internal Services Department**
Point of Contact / Project Manager:	**Juan P. Villarreal**
Email Address:	**Juan.P.Villarreal@brownsvilletx.gov**
Contract Term	
Contract Amount:	3,909,970.00
Contract Base/Primary Term:	268 working days
Anticipated Completion Date:	268 working days
Total Term of Contract:	268 working days
Important Contract Clauses	
Payment and Performance Bond	**Due upon City Commission approval**
Liquidated Damages	**$1,000 per calendar day**
Budget Information	
State or Federal Funds:	**Yes ☐ No ☒**

CONTRACT FOR: HVAC UPGRADES AT THE BROWNSVILLE ANIMAL REGULATION AND CARE FACILITY

A. AGREEMENT

This Agreement is made by and between:

the Owner ("Owner" or "City"): The City of Brownsville
1001 E. Elizabeth St., P.O. Box 911
Brownsville, Texas 78520

and the Contractor ("Contractor"): Ziwa Corporation
1952 S. Price Road
Brownsville, TX 78521

for the following Project ("Project"): RFP #: 196-26-ISD-RFP
Brownsville Animal Regulation and Care Facility
416 FM 511, Olmito, TX 78575

Each individually referred to as a "Party" and collectively referred to as the "Parties". Owner and Contractor, in consideration of the covenants contained herein, and for the mutual benefits to be obtained hereby, the parties hereto agree as follows:

B. CONTRACT DOCUMENTS

The Contractor shall complete the Work described in the Contract Documents for the project. The Contract Documents consist of the following Exhibits:

A. This Agreement;
B. Notice of Award;
C. Request for Proposals (RFP) #; 196-26-ISD-RFP
D. Addenda, as indicated in the RFP;
E. Price Proposal submittal;
F. Drawings;
G. Technical Specifications;
H. General Conditions & Supplementary Conditions;
I. Special Conditions;
J. Certificates of Insurance;
K. Payment Bond; *(Required upon City Commission Approval)*
L. Performance Bond; *(Required upon City Commission Approval)*
M. Form 2- Statement of Conflict of Interest
N. Form 3- Texas Ethics Commission Certificate of Interested Parties (1295);
O. Written Change Orders issued after execution of this Agreement,

which are attached hereto and incorporated herein, and made a part of this Agreement for all purposes. The Contract Documents represent the entire and integrated agreement

between the Owner and the Contractor and supersede all prior negotiations, representations, or agreements, either oral or written. This Agreement may be amended only by written instrument signed by both the Owner and the Contractor. In the event of an inconsistency or conflict in any of the provisions of the Contract Documents, then the inconsistency or conflict shall be resolved by giving precedence first to this Agreement then to the Contract Documents in the order in which they are listed above.

C. **WORK**

Contractor shall complete all Work as specified or indicated in the Contract Documents for the Project identified herein.

D. **PROJECT**

The Project is the total construction for which the Work performed under the Contract Documents may be the whole or a part and which may include construction by the Owner and by Separate Contractors, and is generally defined as RFP #: 196-26-ISD-RFP

E. **CONTRACT PRICE; PAYMENT TERMS; BASE + ALTERNATIVE #1**

Owner agrees to pay Contractor for performance of the Work in accordance with the Contract Documents the guaranteed maximum price of **Three Million Nine Hundred Nine Thousand Nine Hundred Seventy Dollars and Zero Cents ($3,909,970.00).** (hereinafter "Guaranteed Maximum Price" or "GMP"). Guaranteed Maximum Price includes all costs incurred by Contractor, including but not limited to Costs of Work (including among others, labor, equipment, materials, fees, inspections, and permits), construction contingency amount, and Contractor's overhead, all bond financing, profit, price escalation and market price variations. Nothing contained in this Agreement shall require the Owner to pay Contractor an aggregate amount that exceeds the Guaranteed Maximum Price or to make any payment if, in the Owner's belief, the cost to complete the Work would exceed the Guaranteed Maximum Price. Change orders may be approved in writing by Owner for increased costs needed for refinement, development and completion of the Project. However, the maximum allowable amount of change orders payable to the Project shall not exceed Twenty-five percent (25%) of the Guaranteed Maximum Price for the Project.

The Owner shall pay within ***thirty (30) days*** for completed work in monthly draws, less 10% retainage, upon receipt of an acceptable invoice. Invoices shall be in standard form, Application and Certificate for Payment, and shall be accompanied by signed Conditional Release of Liens forms from each applicable subcontractor and supplier.

Retainage shall be paid within in thirty (30) days of receipt of an acceptable Final Invoice. The final Application for Payment shall be accompanied by signed Final Release and Waiver of Liens forms from all subcontractors and suppliers.

F. **CONTRACT TIME**

The Contract Time will commence to run on the day indicated in the Notice to Proceed. A Notice to Proceed may be given at any time within 14 days after the Effective Date of the Agreement and shall substantially complete the Work within 268 working days as identified in the Proposal package.

G. **LIQUIDATED DAMAGES**

Contractor recognizes that time is of the essence for completion of the Work, and to achieve Final Acceptance of the Work, and City will suffer financial loss if the Work is not completed within the time(s) specified herein. The Contractor also recognizes the delays, expense and difficulties involved in proving in a legal proceeding, the actual loss suffered by the City if the Work is not completed on time. Accordingly, instead of requiring any such proof, Contractor agrees that as liquidated damages for delay (but not as a penalty), Contractor shall pay City **One Thousand Dollars ($1000.00)** for each day that expires after the time specified in Paragraph F above, for Final Acceptance until the City issues the Final Letter of Acceptance.

H. **INSPECTION AND FINAL ACCEPTANCE**

The City's inspection and acceptance of contractual compliance will be accomplished by an engineering Inspector of the engineering Department. The City reserves the right to reject unsatisfactory work within a 24-hour period. Contractors have 48 hours to correct unacceptable work. (To be corrected during regular working days, holidays or weekends.)

Prior to beginning work, the Contractor shall provide to the City a Schedule of Values related to the Work, which shall be used for purposes of periodic payments.

The Contract Sum shall include all materials, supplies, tools, equipment, permits, perimeter fencing, portable restrooms, construction debris container(s), supervision and labor necessary for the proper prosecution and completion of the Work.

The Contractor warrants that the completed Project shall be adequate for the purposes intended.

I. **INDEMNIFICATION**

(a) CONTRACTOR COVENANTS AND AGREES TO FULLY INDEMNIFY, DEFEND AND HOLD HARMLESS, THE CITY AND THE ELECTED OFFICIALS, EMPLOYEES, OFFICERS, DIRECTORS, VOLUNTEERS AND REPRESENTATIVES OF THE CITY, INDIVIDUALLY AND COLLECTIVELY, FROM AND AGAINST ANY AND ALL COSTS, CLAIMS, LIENS, DAMAGES, LOSSES, EXPENSES, FEES, FINES, PENALTIES, PROCEEDINGS, ACTIONS, DEMANDS, CAUSES OF ACTION, LIABILITY AND SUITS OF ANY KIND AND

NATURE, INCLUDING BUT NOT LIMITED TO, PERSONAL OR BODILY INJURY, DEATH AND PROPERTY DAMAGE, MADE UPON THE CITY DIRECTLY OR INDIRECTLY ARISING OUT OF, RESULTING FROM OR RELATED TO CONTRACTOR'S ACTIVITIES UNDER THIS AGREEMENT, INCLUDING ANY ACTS OR OMISSIONS OF CONTRACTOR, ANY AGENT, OFFICER, DIRECTOR, REPRESENTATIVE, EMPLOYEE, CONSULTANT OR SUBCONTRACTOR OF CONTRACTOR, AND THEIR RESPECTIVE OFFICERS, AGENTS EMPLOYEES, DIRECTORS AND REPRESENTATIVES WHILE IN THE EXERCISE OF THE RIGHTS OR PERFORMANCE OF THE DUTIES UNDER THIS AGREEMENT. THIS INDEMNIFICATION PROVISION IS SPECIFICALLY INTENDED TO OPERATE AND BE EFFECTIVE EVEN IF IT IS ALLEGED OR PROVEN THAT ALL OR SOME OF THE DAMAGES BEING SOUGHT WERE CAUSED, IN WHOLE OR IN PART, BY ANY ACT, OMISSION OR NEGLIGENCE OF THE CITY. THIS INDEMNITY PROVISION IS INTENDED TO INCLUDE, WITHOUT LIMITATION, INDEMNITY FOR COSTS, EXPENSES AND LEGAL FEES INCURRED BY THE CITY IN DEFENDING AGAINST SUCH CLAIMS AND CAUSES OF ACTIONS. IN THE EVENT CONTRACTOR AND CITY ARE FOUND JOINTLY LIABLE BY A COURT OF COMPETENT JURISDICTION, LIABILITY SHALL BE APPORTIONED COMPARATIVELY IN ACCORDANCE WITH THE LAWS FOR THE STATE OF TEXAS, WITHOUT, HOWEVER, WAIVING ANY GOVERNMENTAL IMMUNITY AVAILABLE TO THE CITY UNDER TEXAS LAW AND WITHOUT WAIVING ANY DEFENSES OF THE PARTIES UNDER TEXAS LAW.

(b) THE PROVISIONS OF THIS INDEMNITY ARE SOLELY FOR THE BENEFIT OF THE PARTIES HERETO AND NOT INTENDED TO CREATE OR GRANT ANY RIGHTS, CONTRACTUAL OR OTHERWISE, TO ANY OTHER PERSON OR ENTITY. CONTRACTOR SHALL ADVISE THE CITY IN WRITING WITHIN 24 HOURS OF ANY CLAIM OR DEMAND AGAINST THE CITY OR CONTRACTOR KNOWN TO CONTRACTOR RELATED TO OR ARISING OUT OF CONTRACTOR'S ACTIVITIES UNDER THIS AGREEMENT, AND SHALL SEE TO THE INVESTIGATION AND DEFENSE OF SUCH CLAIM OR DEMAND AT CONTRACTOR'S COST. THE CITY SHALL HAVE THE RIGHT, AT ITS OPTION AND AT ITS OWN EXPENSE, TO PARTICIPATE IN SUCH DEFENSE WITHOUT RELIEVING CONTRACTOR OF ANY OF ITS OBLIGATIONS UNDER THIS PARAGRAPH.

(c) This Indemnification provision shall survive termination or expiration of the Agreement.

J. **INDEPENDENT CONTRACTOR; PERSONNEL**

(a) Contractor enters into this Agreement as, and shall continue to be, an independent contractor. All Services shall be performed only by Contractor and Contractor's

employees. Specifically, Contractor must perform within its own organization, work equivalent to at least thirty-five (35) percent of the Contract Price, unless otherwise approved by the City. Subject to and in accordance with the conditions and provisions of this Agreement, Contractor shall have the exclusive right to control the details of its operations and activities and be solely responsible for the acts and omissions of its officers, agents, servants, employees, consultants and subcontractors. Under no circumstances shall Contractor, or any of Contractor's employees, look to City as his/her employer, or as a partner, agent or principal. Neither Contractor, nor any of Contractor's employees, shall be entitled to any benefits accorded to City's employees, including without limitation worker's compensation, disability insurance, vacation or sick pay. Contractor shall be responsible for providing, at Contractor's expense, and in Contractor's name, unemployment, disability, worker's compensation and other insurance, as well as any and all licenses and permits usual or necessary for conducting the Services. Contractor shall be responsible for paying all applicable local, state and federal taxes.

(b) Contractor represents and warrants to City that its employees performing Work hereunder will have sufficient expertise, training, licensure (if applicable) and experience to accomplish the Work for the Project.

(c) Contractor shall not subcontract any portion of the work required by this Agreement, except as provided in the Contract Documents. City may terminate this Agreement, effective immediately, if there is any assignment, or attempted assignment, transfer, or encumbrance, by Contractor of this Agreement or any right or interest herein without City's written consent. In the event Contractor engages any subcontractor in the performance of this Agreement, Contractor shall ensure that all of Contractor's subcontractors perform in accordance with the terms and conditions of this Agreement. Contractor shall be fully responsible for all of Contractor's subcontractors' performance, and liable for any of Contractor's subcontractors' non-performance and all of Contractor's subcontractors' acts and omissions.

K. INSURANCE

(a) The Contractor shall furnish proof of insurance requirements as indicated below. The coverage is to remain in force at all times during the contract period. The following minimum insurance coverage is required. The commercial general liability insurance policy shall name the City of Brownsville, Texas, as an "additional insured." This MUST be written in the description section of the insurance certificate, even if there is a check-off box on the insurance certificate. Any costs for adding the City as "additional insured" shall be at the Contractor's expense.

(b) The City of Brownsville shall be given notice ten (10) days prior to cancellation or modification of any required insurance. The insurance provided shall be endorsed or amended to comply with this notice requirement. In the event that the insurer is unable to accommodate, it shall be the responsibility of the Contractor to provide the proper notice. Such notification will be in writing by registered mail, return receipt requested and addressed to the Purchasing & Contract Services Department located at City Hall, 1001 E. Elizabeth St. 1st Floor Suite 101.

(c) The Contractor's insurance must be provided by an A.M. Best's "A-"rated or better insurance company authorized to issue insurance policies in the State of Texas, subject to approval by the City of Brownsville Department of Safety and Risk Management. Any exclusions or provisions in the insurance maintained by the Contractor that excludes coverage for work contemplated in this solicitation shall be deemed unacceptable, and shall be considered breach of contract.

i. Workers' Compensation and Employers' Liability Insurance

Contractor shall purchase and maintain such insurance coverage with limits consistent with statutory benefits outlined in the Texas Workers' Compensation Act (Texas Labor Code, Ch. 406, as amended), and minimum limits for Employers' Liability as is appropriate for the Work being performed and as will provide protection from claims set forth below which may arise out of or result from Contractor's performance of the Work and Contractor's other obligations under the Contract Documents, whether it is to be performed by Contractor, any Subcontractor or Supplier, or by anyone directly or indirectly employed by any of them to perform any of the Work, or by anyone for whose acts any of them may be liable:

1. claims under workers' compensation, disability benefits, and other similar employee benefit acts;

2. claims for damages because of bodily injury, occupational sickness or disease, or death of I Contractor' s employees. Any firm performing work for or on behalf of the City of Brownsville must provide Workers' Compensation insurance.

ii. General Liability Insurance

Covering premises-operations, products-completed operations, independent contractors and contractual liability.

Limits: Combined single limit bodily injury/property damage $1,000,000.

This coverage must include, but not limited to:

1. Coverage for the liability assumed by the Contractor under the indemnity provision of the contract.
2. Coverage for Premises/Operations
3. Products/Completed Operations
4. Broad Form Contractual Liability
5. Independent Contractors

iii. Commercial Automobile Liability Insurance

Covering all owned, hired and non-owned automobile equipment.

Limits: Bodily injury	$250,000 each person,
	$500,000 each occurrence
Property damage	$100,000 each occurrence

This insurance shall be kept in force until the work under this Agreement has been completed and accepted by the City. The City shall be listed as Additional Insured under the policy.

L. **TERMINATION**

(a) *Termination for Cause.* The aggrieved party may terminate this Agreement for cause if the party in breach has not corrected the breach within ten (10) days after written notice from the aggrieved party identifying the breach. The City Manager may also terminate this Agreement upon such notice as the City Manager deems appropriate under the circumstances in the event the City Manager determines that termination is necessary to protect the public health or safety. The parties agree that if the City erroneously, improperly or unjustifiably terminates for cause, such termination shall be deemed a termination for convenience, which shall be effective thirty (30) days after such notice of termination for cause is provided.

This Agreement may be terminated for cause for reasons including, but not limited to, Contractor's repeated (whether negligent or intentional) submission for payment of false or incorrect bills or invoices, failure to perform the Work to the City's satisfaction; or failure to continuously perform the work in a manner calculated to meet or accomplish the objectives as set forth in this Agreement.

(b) *Termination for Convenience.* The City reserves the right, in its best interest as determined by the City, to cancel this Agreement for convenience by giving written notice to the Contractor at least thirty (30) days prior to the effective date of such cancellation. In the event this Agreement is terminated for convenience, Contractor shall be paid for any services performed to the City's satisfaction pursuant to the Agreement through the termination date specified in the written notice of termination. Contractor acknowledges and agrees that he/she/it has received good, valuable and sufficient consideration from City, the receipt and adequacy of which are hereby acknowledged by Contractor, for City's right to terminate this Agreement for convenience.

(c) *Cancellation for Non-appropriated Funds.* The City reserves the right, in its best interest as determined by the City, to cancel this Agreement for non-appropriated funds or unavailability of funds by giving written notice to the Contractor at least thirty (30) days prior to the effective date of such cancellation. The obligation of the City for payment to a Contractor is limited to the availability of funds appropriated in a current fiscal period, and continuation of the contract into a subsequent fiscal period is subject to appropriation of funds, unless otherwise provided by law.

(d) *Force Majeure.* The City and Contractor will be excused from the performance of their respective obligations under this Agreement when and to the extent that their performance is delayed or prevented by any circumstances beyond their control including, fire, flood, explosion, strikes or other labor disputes, act of God or public emergency, war, riot, civil commotion, malicious damage, act or omission of any governmental authority, delay or failure or shortage of any type of transportation, equipment, or service from a public utility needed for their performance, provided that:

i. The non performing party gives the other party prompt written notice describing the particulars of the Force Majeure including, but not limited to, the nature of the occurrence and its expected duration, and continues to

furnish timely reports with respect thereto during the period of the Force Majeure;

ii. The excuse of performance is of no greater scope and of no longer duration than is reasonably necessary when considered in light of the Force Majeure;

iii. No obligations of either party that arose before the Force Majeure causing the excuse of performance are excused as a result of the Force Majeure; and

iv. The non-performing party uses its best efforts to remedy its inability to perform.

v. Notwithstanding the above, performance shall not be excused under this Section for a period in excess of sixty (60) days, provided that in extenuating circumstances, the City may excuse performance for a longer term. Economic hardship of the Contractor will not constitute Force Majeure. The term of the agreement shall be extended by a period equal to that during which either party's performance is suspended under this Section.

M. WARRANTIES

The Contractor warrants to the Owner that materials and equipment furnished under the Agreement will be of good quality and new unless the Contract Documents require or permit otherwise. The Contractor further warrants that the Work will conform to the requirements of the Contract Documents and will be free from defects, except for those inherent in the quality of the Work the Contract Documents require or permit. Work, materials, or equipment not conforming to these requirements may be considered defective. The Contractor's warranty excludes remedy for damage or defect caused by abuse, alterations to the Work not executed by the Contractor, improper or insufficient maintenance, improper operation, or normal wear and tear and normal usage. If required by the Architect, the Contractor shall furnish satisfactory evidence as to the kind and quality of materials and equipment.

N. MISCELLANEOUS PROVISIONS

(a) *Successors and Assigns.* All of the provisions of this Agreement shall be binding upon and inure to the benefit of the parties hereto, and their partners, assigns, successors, subcontractors, executors, heirs, officers, agents, employees, representatives, and administrators.

(b) *Choice of Law.* The laws of the state of Texas shall govern the validity of this Agreement, the construction of its terms and the interpretation of the rights and duties of the parties hereto.

(c) *No Waiver of Governmental Immunity.* NOTHING IN THIS AGREEMENT SHALL BE CONSTRUED TO WAIVE CITY'S GOVERNMENTAL IMMUNITY FROM LAWSUIT, WHICH IMMUNITY IS EXPRESSLY RETAINED TO THE EXTENT IT IS NOT CLEARLY AND UNAMBIGUOUSLY WAIVED BY STATE LAW.

(d) *Assignment.* Contractor shall not assign any of Contractor's rights under this Agreement, or delegate the performance of any of Contractor's duties hereunder, without the prior written consent of the City.

(e) *Modification or Amendment.* No amendment, change or modification of this Agreement shall be valid unless in writing signed by the parties hereto.

(f) *Venue.* This Agreement and any and all matters arising directly or indirectly herefrom shall be governed by and construed and enforced in accordance with the Laws of the State of Texas, with the Federal and State Courts of **Cameron County**, Texas having jurisdiction. If at any time there is a dispute between or among the Parties with respect to any matter arising directly or indirectly from this Agreement (an "Agreement Matter"), the Parties agree that, prior to seeking judicial remedy, they will engage in face-to-face negotiations in an attempt to resolve such dispute and shall, upon failing to negotiate a mutually-satisfactory resolution, choose a mutually agreeable neutral third party to mediate such dispute. Mediation shall be non-binding and shall be confidential.

(g) *Execution and Consideration.* This Agreement is executed by the parties hereto without coercion or duress for any substantial consideration, the sufficiency of which is forever confessed

(h) *Notices.* Any and all notices, demands, or other communications required or desired to be given hereunder by any party shall be in writing and shall be validly given or made to another party if personally served, or if deposited in the United States mail, certified or registered, postage prepaid, return receipt requested. If such notice or demand is served personally, notice shall be deemed constructively made at the time of such personal service. If such notice, demand or other communication is given by mail, such notice shall be conclusively deemed given five days after deposit thereof in the United States mail addressed to the party to whom such notice, demand or other communication is to be given as follows:

If to Contractor:	Ziwa Corporation Attn: Jorge De La Garza 1952 S. Price Road Brownsville, TX 78521
If to City:	City of Brownsville Attn: City Manager 1001 E Elizabeth St. Brownsville, TX 78520
With Copy to:	City of Brownsville Attn: City Attorney 1001 E Elizabeth St. Brownsville, TX 78520

Any party hereto may change its address for purposes of this paragraph by written notice given in the manner provided above.

(i) *Cumulative Remedies*. All rights and remedies of the Parties under this Agreement shall be cumulative, and none shall exclude any other right or remedy provided by law, or by any other provisions of the Agreement. All such rights and remedies may be exercised and enforced concurrently and whenever, and as often, as occasion for their exercise arises.

(j) *Waiver of Breach*. A waiver by either Party of a breach of the Agreement by the other Party does not constitute a continuing waiver or a waiver of any subsequent breach of the Agreement.

(k) *No Third Party Beneficiaries*. Nothing in this Agreement shall be construed to create any right in any third party not a signatory to this Agreement, and the Parties do not intend to create any third party beneficiaries by entering into this Agreement.

(l) *Entire Understanding*. This document and any exhibit attached hereto, constitute the entire understanding and agreement of the parties, and any and all prior agreements, understandings, and representations are hereby terminated and canceled in their entirety and are of no further force and effect.

(m) *Counterparts*. This Agreement may be executed in a number of identical counterparts, each of which shall be deemed an original for all purposes. A facsimile signature will also be deemed to constitute an original if properly executed.

(n) *Miscellaneous Drafting Provisions*. This Agreement shall be deemed drafted equally by the Parties hereto. The language of all parts of this Agreement shall be construed as a whole according to its fair meaning, and any presumption or principle that the language herein is to be construed against any Party shall not apply. Headings in this Agreement are for the convenience of the Parties and are not intended to be used in construing this document.

(o) *Authority to Execute*. The individuals executing this Agreement on behalf of the respective Parties below represent to each other and to others that all appropriate and necessary action has been taken to authorize the individual who is executing this Agreement to do so for and on behalf of the Party for which his or her signature appears, that there are no other parties or entities required to execute this Agreement in order for the same to be an authorized and binding agreement on the Party for whom the individual is signing this Agreement and that each individual affixing his or her signature hereto is authorized to do so, and such authorization is valid and effective on the date hereof.

(p) *Savings/Severability*. In case any one or more of the provisions contained in this Agreement shall for any reason be held to be invalid, illegal or unenforceable in any respect, such invalidity, illegality or unenforceability shall not affect any other provision hereof, and this Agreement shall be construed as if such invalid, illegal or unenforceable provision had never been contained herein.

(q) *Prohibition On Contracts With Companies Boycotting Israel.* Contractor acknowledges that in accordance with Chapter 2270 of the Texas Government Code, the City is prohibited from entering into a contract with a company for goods or services unless the contract contains a written verification from the company that it: (1) does not boycott Israel; and (2) will not boycott Israel during the term of the contract.

The terms " boycott Israel" and" company" shall have the meanings ascribed to those terms in Section 808.001 of the Texas Government Code. ***By signing this* Agreement, *Contractor certifies that Contractor' s signature provides written verification to the City that Contractor: (1) does not boycott Israel, and (2) will not boycott Israel during the term of the Agreement.***

(r) Immigration Nationality Act. As required by law, Contractor shall verify the identify and employment eligibility of its employees who perform work under this Agreement, including completing the Employment Eligibility Verification Form (I-9). Upon request by the City, Contractor shall provide City with copies of all I-9 forms and supporting eligibility documentation for each employee who performs work under this Agreement. Contractor shall adhere to all Federal and State laws as well as establish appropriate procedures and controls so that no services will be performed by any Contractor employee who is not legally eligible to perform such services. **CONTRACTOR SHALL INDEMNIFY CITY AND HOLD CITY HARMLESS FROM ANY PENALTIES, LIABILITIES, OR LOSSES DUE TO VIOLATIONS OF THIS PARAGRAPH BY CONTRACTOR, CONTRACTOR'S EMPLOYEES, SUBCONTRACTORS, AGENTS, OR LICENSEES**. City, upon written notice to Contractor, shall have the right to immediately terminate this Agreement for violation of this provision by Contractor.

(s) *Representations*. Each signatory represents this Agreement has been read by the Party for which this Agreement is executed and that such Party has had an opportunity to confer with its legal counsel.

IN WITNESS WHEREOF the undersigned have executed this Agreement as of the day and year first written above.

NO OFFICIAL, EMPLOYEE, AGENT, OR REPRESENTATIVE OF THE OWNER HAS ANY AUTHORITY, EITHER EXPRESSED OR IMPLIED, TO AMEND THIS AGREEMENT, EXCEPT SUCH EXPRESS AUTHORITY AS MAY BE GRANTED BY THE CITY COMMISION OF THE CITY OF BROWNSVILLE.

EXECUTED THIS 7 DAY OF July, 2026.

OWNER:	CONTRACTOR:
_____	_____
(Signature)	(Signature)

Print Name:
City of Brownsville

Jorge de la Garza
Print Name:

Approved as to Form:

Alyssa J. Castillon
Assistant City Attorney

FOR Will Trevino
City Attorney

Exhibit "B"

NOTIFICATION OF INTENT TO AWARD

To:	Ziwa Corporation 1952 S. Price Road Brownsville, TX 78521
Date:	07/07/2026
Attn:	Ziwa Corporation
Project Title	HVAC Upgrades at the Brownsville Animal Regulation and Care Facility
Project Location	416 FM 511, Brownsville, TX 78575
Project Number	196-26-ISD-RFP

Dear Ziwa Corporation,

On behalf of the City of Brownsville, I am pleased to announce that your company, Ziwa Corporation, will be submitted for approval to City Commission for the above referenced project on July 21, 2026.

This Notice of Intent to Award is subject to execution of a written contract and, as a result, this Notice does NOT constitute the formation of a contract between the City of Brownsville and Ziwa Corporation. Ziwa Corporation shall not acquire any legal or equitable rights relative to the contract services until a contract containing terms and conditions acceptable to the City of Brownsville is executed.

The City of Brownsville further reserves the right to cancel this Notice of Intent to Award at any time, with or without cause, prior to the execution of a written contract.

Congratulations and we look forward to working with your company on this project.

Thank you,

Alexandra Guajardo

Alexandra Guajardo
Contract Administrator
Procurement Department
City of Brownsville, Texas

The Brownsville Herald

PUBLISHER'S AFFIDAVIT
STATE OF TEXAS
COUNTY OF CAMERON

I, Sally Rodriguez, being duly sworn on her oath states that she is the Legal Representative of the BROWNSVILLE HERALD a semi-weekly newspaper in Cameron County and that the attached notice did print in the following issues:

Date: March 28, 2026
Acct City Of Bro. Purchasing L Acct #30004791
IO: #30278945 (Bid/Proposa/Qualificatio)

Subscribed and sworn to before me on this the 2nd day of April 2026.

Notary Public for the State of Texas

Cristal Amada Trevino
My Commission Expires
4/1/2029
Notary ID 135508080

FOR RENT FOR SALE

myRGV Classifieds .com

nixmedia|jobs.com

The Brownsville Herald

218 Electric Repairs

AUTOMATIC DOOR SERVICE
Electronic Gates & Garage Doors. Having problems with your Electric Gate or Garage Door or do you need an installation or replacement ? Call Now & Compare Prices. Se Habla español. (956) 867-1606

Aztec House Leveling & Remodeling Co. House Cracking? Foundation Problems? Remodeling/Roofing FREE ESTIMATES Hgn 412-1558 McA 631-6695 Elwn 546-5657

GARAGE Door Service Installation of Doors, Motors, and Repairs. Call Today! (956) 451-6097

501 Help Wanted

Marketing & Communications Specialist E & E RGV Homes, LLC seeks a Marketing & Communications Specialist in McAllen, TX. Duties include developing and implementing marketing strategies; managing digital presence including website and social media; creating visual and written promotional content; producing marketing materials; coordinating internal and external communications; maintaining digital campaigns; and supporting branding initiatives.

Requires bachelor's degree in digital communications, marketing, public relations or related field and 12 months of experience. Send resumes to: E & E RGV Homes, LLC Elda Perez at eldaperez0618@gmail.com

Structural Engineer – Full Time Position Structural engineering firm seeking a Mid to Senior Level Structural Engineer (8+ years experience). Must be a Texas-licensed P.E. Responsibilities include leading structural design projects from design through construction, preparing calculations, specifications, drawings, and coordinating with clients and contractors.

Requirements: B.S. in Civil or Structural Engineering (M.S. preferred), strong experience in reinforced concrete design (steel, masonry, and wood a plus), proficiency with structural analysis software (RISA 3D, ENERCALC, or similar), and knowledge of applicable building codes. Bilingual (English/Spanish) preferred.

Email resume to info@chavarriagaengineering.com or call 956-607-6431.

727 Travel/Tickets

WE BUY LAND! WE BUY HOUSES (APARTMENTS)! ANYWHERE! ANY CONDITION! WE PAY CASH! ANY PRICE!! >956-295-0556<

WE BUY MOBILE HOMES / MYST HOUSES TO BE MOVED! IN ANY AREA! ANY CONDITION! WE PAY CASH! ANY PRICE!! >956-545-1118<

CAMERON COUNTY DRAINAGE DISTRICT NO. 1

IS HIRING FOR THE FOLLOWING POSITIONS

GENERAL MANAGER

LONG REACH EXCAVATOR OPERATORS

FOR INFORMATION VISIT:

www.ccddl.org or call 956-838-0162

226 Painting

PAVING SERVICES
-New Paving Slab -Caliche Driveways -Asphalt Driveways Asphalt Patching Repairs -New Driveway & Re-paving Do repairs on RV pad, roads, parking, & more paving asphalt. 956-873-5184 956-264-6070

230 Roommates

We Do Carports for sealed $7.49 per square foot (Per example, 24x24 = $4,314) Includes everything labor, and Material materials! Call for a quote (956)499-7001

605 Furniture & Stores for Sale

La Plaza Condo for rent, 2 Bdrm, 1 Bath, CA/H incl. washer & dryer Complex. $900/ Mo. + $600/Dep. Call (956) 778-3352.

703 Houses for Sale

1,580 Sq Ft 3Bdr, 1 Bath 1 Acre Lot, San Pedro Cash Only $210,000 No Agents. View Only March 29, 30, or 31 (956) 561-1107

726 Miscellaneous

WE BUY Real Estate Notes 956-330-7198

101 Legal Notices

CITATION BY PUBLICATION
THE STATE OF TEXAS
2026-DCL-01126-H

Erick R. Hurtado Bracamonte vs. Rosa Araceli Hernandez Escobar

§ IN THE 444TH DISTRICT COURT
§ OF
§ CAMERON COUNTY, TEXAS

TO: Rosa Araceli Hernandez Escobar
No Known Address

NOTICE TO RESPONDENT: "You have been sued. You may employ an attorney. If you or your attorney does not file a written answer with the clerk who issued this citation by 10:00 am on the Monday next following the expiration of 20 days after the date you were served this citation and petition, a default judgment may be taken against you.

The petition of Erick R. Hurtado Bracamonte, Petitioner, was filed in the 444th District Court of Cameron County, Texas on the February 25, 2026 against Rosa Araceli Hernandez Escobar, Respondent(s), numbered 2026-DCL-01126 and entitled "In The Interest of E.E.H. Child". The suit requests: Original Petition in Suit Affecting the Parent-Child Relationship as is more fully shown by the Petition on file in this suit.

"The court has authority in this suit to enter any judgment or decree, including but not limited to dissolving the marriage, providing for the division of property, which will be binding on you."

Issued and given under my hand and seal of said Court at Brownsville, Texas, on this the 19th day of March, 2026

ATTORNEY
Erick R. Hurtado
Bar No. [illegible]
[illegible]
[illegible], TX 78520

DISTRICT COURT CAMERON COUNTY, TEXAS

Laura Hernandez
District Clerk
Cameron County, Texas

By: [illegible]
Deputy

BROWNSVILLE
Est. by the Rivers, by the Sea.

City of Brownsville Procurement Department

INVITATION

* B/P/Q (Bid/Proposal/Qualifications)

Description	Number	Pre-Bid/Proposal Meeting	Site Visit	Proposal Opening
Request for Proposals for: HVAC Upgrades at the Brownsville Animal Regulation and Care Facility	*P 196-26-ISD-RFP	Tuesday, April 7, 2026 @ 10:00 A.M CT TEAMS VIRTUAL MEETING	Tuesday, April 7, 2026 @ 3:00 PM CT 415 FM 511, Brownsville, TX 78575	Tuesday, May 5, 2026 @ 3:00 PM CT TEAMS VIRTUAL MEETING

Interested Bidders/Proposer are invited to attend the Bid/Proposal opening via Video conference on the dates specified. Presence is not mandatory. Specifications may also be viewed and downloaded at: http://www.brownsvilletx.gov or https://brownsvilletx.bonfirehub.com/ (956) 548-6087 office, e-mail: purchasing@brownsvilletx.gov

03/28/2026

AMIGOS DEL VALLE, INC.
REQUEST FOR PROPOSALS
"NEW FULL SIZE 12-15 PASSENGER VAN YEAR MODEL 2026"

Amigos Del Valle, Inc. (ADV) is seeking sealed Request for Proposals (RFP) from qualified dealers for NEW Full Size 12-15 Passenger Van Year Model 2026. The Legal Notice and RFP specifications will be available on Monday, March 30, 2026, and may be picked up at Amigos Del Valle, Inc., 212 W 18th St, Mission, TX 78572.

SEALED RFP must be properly addressed to Emanuel Rodriguez, Procurement/Transportation Manager, and submitted at Amigos Del Valle, Inc., 212 W 18th St, Mission, TX 78572, (956) 213-9400, extension 3009.

ONE (1) ORIGINAL AND ONE (1) COPY OF ALL RFPs ARE REQUIRED with the proper notation written on the lower left-hand corner of the envelope: RFP – "NEW Full Size 12-15 Passenger Van Year Model 2026". The deadline for submitting a sealed RFP is on April 16, 2026, at 02:00 P.M.

NO FACSIMILES, EMAILS, OR LATE ARRIVALS WILL BE ACCEPTED. ANY SEALED REQUEST FOR PROPOSALS (RFP) RECEIVED AFTER THE SUBMITTAL DEADLINE WILL NOT BE OPENED AND WILL BE RETURNED.

OVERNIGHT MAIL MUST ALSO BE PROPERLY LABELED ON THE OUTSIDE OF THE EXPRESS ENVELOPE OR PACKAGE ABOUT THE RFP.

AMIGOS DEL VALLE, INC. RESERVES THE RIGHT TO REFUSE AND REJECT ANY AND ALL RFPs AND TO WAIVE ANY AND ALL FORMALITIES OR TECHNICALITIES, OR TO ACCEPT THE RFP CONSIDERED THE BEST AND MOST ADVANTAGEOUS TO AMIGOS DEL VALLE, INC.

Emanuel Rodriguez
Procurement/Transportation Manager
erodriguez@advgv.org

FIND IT IN THE CLASSIFIEDS

Sail away with a great deal through the classifieds

myRGV .com

Call: 956-683-4200

TexSCAN

TexSCAN Week of March 29-April 4, 2026

CELLULAR PHONE SERVICE

[illegible] Cellular Choice – for cities, counties, school districts coverage in the largest carriers. No equipment needed, no hidden fees and agreement to free, 2-3 plans flavors available of talk and text, starting at just $30/month. For more information, call 1-[illegible]-[illegible].

EVENT

Reunion—Texas Ladies State Club Circle will, Sat., April 18 at 4:00 p.m., Mac Jacobs Park, 650 Paso Drive West, Weslaco, vendors, food, crafts, fun. Over 100 judges are needed for this event. Sign up to judge at www.texascan.com. Visit/register online. 956-481-5000

Reunion—19th Annual Events Unit, Sat., April 26, 10 a.m. - 3 p.m., Central Park, 301 S. Austin St., 100+ vendors, go-carts, bounce, children's activities, food trucks, music, entertainment, kids' area, exhibitors and more. Visit/register online. 956-481-5000

AUTO INSURANCE

DENTAL INSURANCE from Physicians Mutual Insurance Company. Coverage for 400 plus procedures. Real dental insurance – not a discount plan. Do not wait! Call now! Get your FREE Dental Information Kit today! 1-833-901-[illegible] www.dentalbyphone.com/rgvexpo

OIL & GAS

We buy oil, gas & mineral, royalty, lease, non-producing, including Non-Participating Royalty Interest (NPRI). Provide us your desired price for an offer evaluation. Call today! 800-[illegible]. Lobo Minerals, LLC, PO Box 13405, Lubbock, TX 79415. Info@LoboMinerals.com

VACATION

[illegible] Vacations. Over 50 guided tours available. Affordable, social and stress-free travel designed for seniors 50+. Our tours include accommodations, transportation, baggage handling, gratuities, entrance fees, a professional tour Director and select meals. Call [illegible] to schedule your FREE brochure today! [illegible]

WANTED

[illegible] Every Cash — I Buy RVs & Motor Homes – Travel Trailers, 5th Wheels, Campervans, Bumper Pulls, In Any Area, Any Condition (Old Junk, Dirty or Damaged) I PAY CASH! No Title – No Problem, we can apply for one. We go anywhere in Texas. ANY Conditions, 956-466-7981

Texas Press Statewide Classified Network
182 Publications Serving Texas Communities - Statewide Ads
Statewide $250 • Email [illegible]@texaspress.com

NOTICE: While most advertisers are reputable, we cannot guarantee products or services advertised. We urge readers to use caution and to investigate before sending money to any advertiser. For more information on scams, contact the Texas Attorney General at 800-621-0508 or the Federal Trade Commission at 877-FTC-HELP. The FTC web site is www.ftc.gov/bizop.

myRGV .com Check us out!

101 Legal Notices

CAMERON COUNTY
INVITATION

Cameron County is requesting bids/proposals/qualifications for the following, which should BE REFERENCED ON ENVELOPE, "ATTN: COMMISSIONERS COURT - SEALED BID/PROPOSAL."
DEADLINE- - 3:00 p.m.

04/22/26 BID #260304	EK ATWOOD PARK PAVILION CONSTRUCTION SOLICITATION
04/08/26 RFP #260301	EASEMENT LEASE OF APPROXIMATELY 15 FT WIDE BY 1.46 ACRE TO RUN CONDUIT CABLE COMMUNICATION THROUGH ISLAND ISLA BLANCA PARK OUT OF GULF OF AMERICA

A = Annual Q = Quarterly B = Bid RFP = Proposal RFQ = Qualifications

Detailed specifications are available from Dalia Loera at 956/544-0671 of the County Purchasing Department or web site- Bids & Specs. Tab https://www.cameroncountytx.gov/purchasing-bids-rfqs-addms-tabs/

Your sealed submittals should contain the REFERENCE "ATTN: COMMISSIONERS COURT - SEALED BID/PROPOSAL/REQUEST FOR QUALIFICATIONS ON THE OUTSIDE OF YOUR RETURN ENVELOPE and addressed and sent to the County Purchasing Department - Cameron County Courthouse, (Dancy Building) 1100 E. Monroe St., Basement Floor, Room# B17, Brownsville, Tx. 78520. Properly referenced and returnedBids/ RFP's / RFQ's will be opened at the Cameron County Courthouse, 1100 East Monroe Street, Brownsville, Texas in the Purchasing Department – Basement Floor – Room #B17 at 3:00p.m. (as per Purchasing Dept. time clock) on deadline date.Bidders are invited to attend. Cameron County is an Equal Employment Opportunity Employer and expressly reserves the right to accept or reject any and all submittals and may waive formalities.

03/28/2026

The Brownsville Herald

PUBLISHER'S AFFIDAVIT
STATE OF TEXAS
COUNTY OF CAMERON

I, Sally Rodriguez, being duly sworn on her oath states that she is the Legal Representative of the BROWNSVILLE HERALD a semi-weekly newspaper in Cameron County and that the attached notice did print in the following issues:

Date: April 04, 2026
Acct City Of Bro.Purchasing L Acct #30004791
IO: #30279194 (Bid/Proposal/Qualificatio)

Subscribed and sworn to before me on this the 1st day of May 2026.

Notary Public for the State of Texas

Cristal Amada Trevino
My Commission Expires
4/1/2029
Notary ID135508080

SCANNED

BROWNSVILLE

City of Brownsville Procurement Department

INVITATION

* B/P/Q (Bid/Proposal/Qualifications)

Description	Number	Pre-Bid/Proposal Meeting	Site Visit	Proposal Opening
Request for Proposals for HVAC Upgrades at the Brownsville Animal Regulation and Care Facility	*P 196-26-ISD-RFP	Tuesday, April 7, 2026 @ 10:00 A.M CT TEAMS VIRTUAL MEETING	Tuesday, April 7, 2026 @ 3:00 P.M CT 416 FM 511, Brownsville, TX 78575	Tuesday, May 5, 2026 @ 3:00 P.M CT TEAMS VIRTUAL MEETING

Interested Bidders/Proposer are invited to attend the Bid/Proposal opening via Video conference on the dates specified. Presence is not mandatory. Specifications may also be viewed and downloaded at http://www.brownsvilletx.gov or https://brownsvilletx.bonfirehub.com/ (956) 548-6087 office, e-mail: purchasing@brownsvilletx.gov.

04/04/2026

NOTICE OF PUBLIC HEARING

You are hereby notified that there will be a Public Hearing at 121 North Arroyo Blvd, Rio Hondo, TX 78583, Commission Chambers on Tuesday April 14, 2026 at 6:00 pm, Ordinance 2026-02 amending its code of ordinances by providing for the establishment of regulations and administrative procedures for the governance and remediation of substandard structures, pursuant to chapter 214, subchapter A, Texas Local Government Code. The Public may communicate with the commission during the public hearing in person. For further information contact Ben Medina Jr, City Secretary at (956) 748-2102.

PUBLIC HEARING NOTICE AND NOTICE OF FUND AVAILABILITY ATTENTION NON-PROFITS & SOCIAL SERVICE AGENCIES

In compliance with the Consolidated Plan for Community Planning and Development Programs (CDBG & HOME), the City of Harlingen's Community Development Department will conduct a public hearing to solicit input from interested parties on the City's strengths and needs pertaining to its entitlement Programs. The City's allocation for Year 52 CDBG (B-26-MC-48-0504: 2026-2027) is estimated to be $952,807.00 and Year 32 HOME (M-26-MC-48-0504: 2026-2027) $327,368.31. Proposed allocation is subject to change, as per the U.S. Department of Housing & Urban Development's allocation release.

The overall goal for the Cameron County Entitlement Communities Consolidated Plan is to strengthen partnerships amongst all levels of government and the private sector, including nonprofit organizations, to provide decent housing, establish and maintain a suitable living environment and to expand economic opportunities for every citizen particularly for low to moderate income persons.

Eligible activities may include street, drainage and park improvements; funding for services to our low-income youth, elderly, homeless, disabled, etc.; housing assistance for the purchase or construction of a home.

Encumplimiento con el Plan Consolidado de Planificación Comunitaria y Programas de Desarrollo (CDBG & HOME), el Departamento de Desarrollo Comunitario de la Ciudad de Harlingen realizará una audiencia pública para solicitar comentarios de personas interesadas sobre las fortalezas y necesidades de la Ciudad en relación con sus programas. La asignación de la Ciudad para el Año 52 CDBG (B-26-MC-48-0504) (2026-2027) se estima en $952,807 y el Año 32 HOME (M-26-MC-48-0504) 2026-2027) $327,368.31. La asignación propuesta está sujeta a cambios, según el comunicado de asignación del Departamento de Vivienda y Desarrollo Urbano de EE. UU.

El objetivo general del Plan Consolidado de las Comunidades de Derecho del Condado Cameron es fortalecer las asociaciones entre todos los niveles del gobierno y el sector privado, incluyendo las organizaciones sin fines de lucro, para proporcionar viviendas dignas, establecer y mantener un entorno de vida adecuado y ampliar las oportunidades económicas para cada ciudadano en particular para personas de ingresos bajos a moderados.

Las actividades elegibles pueden incluir mejorar calles, drenaje o parques; servicios para jóvenes, ancianos, personas sin hogar, personas discapacitadas, de bajos recursos; asistencia para comprar o construir una vivienda.

The Community Development Department will accept applications from public and private non-profit organizations until 5:00 p.m., April 24th, 2026. Applications received after this date and time will not be accepted or considered. The "Program Applications for CDBG and HOME Funding" are available for pick-up at the City of Harlingen Community Development Office, 502 E. Tyler, Harlingen, Texas or via email upon request to rylee@harlingentx.gov

El Departamento de Desarrollo Comunitario aceptará solicitudes de organizaciones públicas y privadas hasta las 5:00 p.m., Viernes, 24 de Abril del 2026. Las solicitudes recibidas después de esta fecha y hora no serán aceptadas ni consideradas. Las "Solicitudes de Programa para CDBG y HOME" están disponibles para su retiro en la Oficina de Desarrollo Comunitario de la Ciudad de Harlingen, 502 E. Tyler, Harlingen, Texas, o pedido por correo electrónico al rylee@harlingentx.gov

Applicants must attend the public hearing on Thursday, May 14th , 2026 to present their programs and answer questions regarding their application and services. The public is strongly encouraged to attend the public hearing. *Los solicitantes deben atender la audiencia pública el Jueves, 14 de Mayo del 2026 para presentar sus programas y para responder a preguntas sobre su solicitud y servicios. Se recomienda al público a atender a la audiencia pública.*

PUBLIC HEARING / AUDIENCIA PÚBLICA

A Public Hearing will be held on Thursday, May 14th , 2026, at 5:30 p.m.
Una audiencia pública se llevará a cabo el Jueves, 14 de Mayo del 2026, a las 5:30 p.m.
At Harlingen Public Library Auditorium- 410 76 Dr., Harlingen, TX 78550

APPLICATION WORKSHOPS / TALLER DE SOLICITUD

New Applicants for CDBG or HOME funds are encouraged to attend an application workshop.
A los fluteros solicitantes de CDBG o HOME se les recomienda atender a un taller de solicitud.

CDBG & HOME Application Workshop – Friday, April 10th, 2026 at 1:00 p.m.
Taller De Solicitud CDBG – *Viernes, 10 de Abril, 2026 a las 1:00 p.m.*

at Lon C. Hill Office- Conference Room- 502 E. Tyler Ave, Harlingen, TX 78550

Accommodations for individuals with handicaps/disabilities or limited English proficiency shall be made upon request by calling (956) 216-5190 or TTY 1-800-735-2989 at least 3 days prior to the meeting date and time. Las adaptaciones para personas con impedimentos / discapacidades o dominio limitado del inglés serán hechas previa solicitud llamando al (956) 216-5190 o TTY 1-800-735-2989 al menos 3 días antes de la fecha y hora de la reunión.

Questions or comments should be submitted to the Community Development Department by phone at (956) 216-5190; or via email at salvarez@harlingentx.gov *Las preguntas o comentarios deben enviarse al Departamento de Desarrollo Comunitario, por teléfono al (956) 216-5190; o por correo electrónico a salvarez@harlingentx.gov*

218 Business Services

AUTOMATIC DOOR SERVICE Electronic Gate & Garage Doors. Having problems with your Electric Gate or Garage Doors, or do you need an installation or replacement? Call Now & Compare Prices. Se habla español (956) 857-1605

Aztec Home Leveling & Remodeling Co. Home Cracking? Foundation Problems? Remodeling/Roofing FREE ESTIMATES Hm. 412-1558, Mch 631-0995 Brian 546-5657

GARAGE Door Service Installation of Doors, Motors, and Repairs. Call Today! (956) 451-6097

226 Paving

PAVING SERVICES -New Paving Site -Caliche Driveways -Asphalt Driveways Asphalt Patching Repairs -New Grading & Re-Grading -Repairs on RV park roads, parking, & new paving projects. 956-873-3156 956-334-4070

501 Full Time Jobs

Marketing & Communications Specialist E & E ROW Homes, LLC seeks a Marketing & Communications Specialist in Mission, TX. Duties include: developing and implementing marketing and communication strategies, managing digital presence including website and social media, creating visual and written promotional content, producing marketing materials, coordinating internal and external communications, monitoring digital campaigns, and supporting branding initiatives. Requires bachelor's degree in digital communication, marketing, public relations or related field and 12 months of experience. Send resumes to E & E ROW Homes, LLC. Also Press # assigned 8151 for email jobs

230 Apartments

We Do Carports for sale! $7.49 per square foot (For example: 24x24 = $4,314) Includes everything, labor and license materials! Call for a quote (956)466-2001

305 Pets & Animals

LOST CAT Siamese Seal Near E Berkeley Dr. Shaid dark gray (kind of white paint on body) (956) 655-3176

501 Full Time Jobs

Bechtel Energy Inc. has an opening for Structural Field Engineer in Port Isabel, TX. Duties: Project field engrng specialization & expertise w/ work planning & packaging, material mgmt, quantity verification and validation, safety & QC, technical inspection, testing, & subcontract coord. Reqs: B+5 years exp. Send Resume to bechtelusjobs@bechtel.com & reference job 6978.366.3.

501 Full Time Jobs

Bechtel Energy Inc has an opening for CSA Resident Engineer in Port Isabel, TX. Duties: Conduct field investigations & client interviews to determine work scope & cost est. for a project's civil/structural aspects. Reqs: M+3 yrs exp or B+5 yrs exp. Send resume to bechtelusjobs@bechtel.com Must reference job 6978.103.2.

726 Commercial

WE BUY Real Estate Notes 956-369-1139

109 Personals

Dear Heart of Jesus, In the past I have asked for favors. This time I ask you the very special one (mention favor). Take it, dear Jesus, and place it within your own heart where your Father sees it. Then in your merciful eyes it will become your favor, not mine. Amen. Say this prayer for 3 days, promise publication and favor will be granted. Never known to fail. Carlos D., Correo.

121 Items Wanted

WE BUY LAND! WE BUY HOUSES (APARTMENTS) ANYWHERE! ANY CONDITION! WE PAY CASH! ANY PRICE! >956-395-0593<

WE BUY MOBILE HOMES / RV'S / HOUSES TO BE MOVED IN ANY AREA! ANY CONDITION! WE PAY CASH! ANY PRICE! >956-545-1119<

101 Legal Notices

Notice is hereby given that the City of Harlingen, TX will receive competitive, sealed bids for

Bid No. 2026-06 Supply Contract – Drainage Materials

Interested Bidders must register with the Purchasing Office to request a bid packet including specifications and plans at Purchasing@harlingentx.gov. Packets will be emailed upon registration. Bids must be submitted on or before 2:00 p.m., Tuesday, April 21, 2026, at the Purchasing Office, 404 S. 54th St. Harlingen, TX 78550. Bids will be publicly opened and read aloud at 2:30 p.m. on Tuesday, April 21, 2026, at Town Hall (2nd Floor) located at 118 E. Tyler Ave., Harlingen TX 78550.

The City of Harlingen reserves the right to reject any or all bids, to waive defects or technicalities in such bids, to award the contract to the respondent which it considers has submitted the best and most advantageous bid, and to hold all bids for a period of sixty (60) days without taking any action thereon.

HARLINGEN

Housing Authority

HOUSING AUTHORITY OF THE CITY OF HARLINGEN

Invitation to Bid for

the Los Vecinos Apartments, Security Cameras

The Housing Authority of the City of Harlingen is accepting bids for Security Cameras at the Los Vecinos Apartments, 702 South M Street, Harlingen, TX 78550. The successful bidder must complete the project no later than sixty (60) days following notification.

Bid specifications may be picked up at 219 E. Jackson Avenue, Harlingen, TX 78550, beginning on Monday, March 30, 2026. The deadline to submit a bid is Thursday, April 23, 2026, at 2:30 p.m., at 219 E. Jackson Avenue, Harlingen, TX 78550. The bids will be publicly opened and read.

Housing Authority of the City of Harlingen
219 E. Jackson Avenue
Harlingen, Texas 78550

Please direct all inquiries to Cynthia De La Fuente at cdelafuente@harlingen-ha.com and Mary Prieto at mprieto@harlingen-ha.com

Bids shall be submitted sealed and properly identified:
Public Housing Program: Request for Bids- Los Vecinos Security Cameras

All bids shall be submitted to:
Hilda Benavides, Chief Executive Officer
Housing Authority of the City of Harlingen
The Housing Authority of the City of Harlingen reserves the right to accept or reject any or all bids to waive any formalities, and to accept the bids, most advantageous to the Housing Authority.

The Housing Authority of the City of Harlingen is an Equal Opportunity Employer
Section 3 companies welcomed

SCANNED

Form 1 – Proposal Acknowledgment & Authorized Contact

Purpose

This form officially acknowledges the Respondent's intention to submit a response to this solicitation. It also identifies the authorized contact who is empowered to act on behalf of the Respondent and will serve as the primary point of contact throughout the project. By submitting this form, the Respondent acknowledges and accepts all terms, conditions, and requirements stated in the solicitation.

Solicitation No. 196-26-ISD-RFP / Addendum #1 04/17/2026

Respondent Information

Legal Entity Name: Ziwa Corporation

Primary Contact Name: Luis Flores

Title: Estimator

Telephone: 956-542-8167 Email: luis@ziwacorp.com

Acknowledgment of Solicitation Requirements

By signing below, the Respondent certifies and acknowledges the following:

1. The Respondent has examined the solicitation documents and addenda and is familiar with all conditions affecting the response.
2. The Respondent understands that submission of this acknowledgment constitutes a binding offer subject to the terms, conditions, and validity period stated in the solicitation package issued by the City of Brownsville.
3. The Respondent certifies that they possess full authority to bind the entity and to enter into an agreement with the City of Brownsville if selected.
4. The Respondent acknowledges that failure to submit this completed form or to sign below may result in rejection of the response as nonresponsive.

Certification

By signing below, the undersigned Respondent certifies that all statements made herein are true and correct and that they are duly authorized to sign this form and bind the Respondent to its contents.

Signature: _____

Printed Name: Jorge De La Garza

Title: Presidents

Date: 04/30/2026

Company Name: Ziwa Corporation

Phone: 956-542-8167

Email: jdlg@ziwacorp.com

ADDENDUM #1

Request For Competitive Sealed Proposals For: HVAC Upgrades at the Brownsville Animal Regulation and Care Facility

RFP#: 196-26-ISD-RFP

ADDENDUM NOTICE
This Addendum modifies the original solicitation documents. Respondents are responsible for reviewing all changes, clarifications, and revisions contained herein.

ACTION REQUIRED:
Addendum acknowledgment shall be completed in Form 1 – Proposal Acknowledgment & Authorized Contact.

Separate signatures, email confirmations, or individual acknowledgments for each addendum are not required unless explicitly stated in this Addendum.

CONTACT INFORMATION:

Jaydy Valdez – Buyer
City of Brownsville – Procurement Department
City Hall 1001 E. Elizabeth St. 1ST FLOOR Suite No. 101 Brownsville, Texas 78520
Phone: (956) 548-6087
Email: purchasing@brownsvilletx.gov

Clarifications/Additional Information/Changes to the Original Solicitation Package:

- Attachment A: Answers to Questions
- Attachment B- Pre Proposal Attendance
- Attachment C- Revised Form 10: Price Proposal Form
- Attachment D- Ethos Project Revisions

Attachment A- Answers to Questions

Apr 03, 2026 6:53 PM CDT,

My name is [redacted] with [redacted]. We are currently reviewing the RFP documents for the HVAC Upgrades at the Brownsville Animal Regulation and Care Facility and would like to request a site walkthrough at your earliest convenience. We would like to inspect the existing mechanical equipment, review field conditions, and document the existing chiller information to ensure our proposal is as accurate as possible.

Please let us know your available dates and times and we will accommodate your schedule. We look forward to the opportunity to work with the City of Brownsville on this project.

-The City will host a second site visit for vendors who were unable to attend the initial visit. This site visit is scheduled for Tuesday, April 21, 2026, at 11:00 a.m.

Site Visit Location: 416 FM 511, Brownsville, TX 78575

This will be the final site visit opportunity, and no additional site visits will be scheduled thereafter.

Apr 13, 2026 8:40 AM CDT

Can "Distech by Perry Mechanical" by added as an approved Controls Contractor for this project in Spec Section 230900 - Instrumentation and Controls?

-Distech Controls, provided by Perry Mechanical Systems, has been added as Alternate No. 2 to the approved list of HVAC Controls Manufacturer/Vendor. Refer to the revised bid form. The Contractor shall clearly indicate whether this Alternate represents an Add or a Deduct to the Base Proposal. Addendum #1 will be issued for this clarification.

Apr 13, 2026 10:11 AM CDT

Would you please post the pre-bid meeting attendees list?

- Please refer to Exhibit B below.

Apr 13, 2026 2:54 PM CDT
Can we please get the Specifications on the Insulation Material needed for the Underground Chill Water Piping? - Refer Addendum #1 for specifications of Underground Piping and Associated Insulation.

Apr 13, 2026 2:55 PM CDT
How deep will we need to Trench/Excavate for the Underground Chill Water Piping? -Provide a minimum of 36" cover from finished grade to the top of pipe insulation for underground chilled water piping. Contractor shall coordinate final trench depth to accommodate pipe size, insulation thickness, bedding, and any field conditions or utility conflicts. Refer to Addendum #1.

Apr 13, 2026 2:58 PM CDT
On Plan M3.2 alternate calls for (3) units but on page M3.4 it's only showing (2) units for Alternate. On schedule plan the units for the alternate are not specified. - Follow the alternate demarcation line shown on M3.2. The Schedules shown on Sheet M4.1 shall be used in accordance with such demarcation line. Refer to Addendum #1.

Site Visit Vendor Question, April 7, 2026
Has there been an asbestos report done on the building? - An asbestos survey report will be provided.

Attachment B: Pre-Proposal Attendance

Meeting title	Pre Proposal Meeting: 196-26-ISD-RFP: HVAC Upgrades at the Brownsville Animal Regulation & Care Facility
Attended participants	12
Start time	4/07/26, 9:46:24 AM
End time	4/07/26, 10:21:57 AM
Meeting duration	35m 33s
Average attendance time	18m 16s

2. Participants

Name	First Join	Last Leave	In-Meeting Duration	Email
Jaydy Valdez	4/07/26, 9:55:27 AM	4/07/26, 1(	23m 55s	Jaydy.Valdez@brownsvilletx.gov
Roberto Baez	4/07/26, 9:46:59 AM	4/07/26, 1(	24m 9s	roberto.baez@brownsvilletx.gov
Hans Meyer	4/07/26, 9:55:21 AM	4/07/26, 1(	23m 31s	Hans.Meyer@brownsvilletx.gov
Cesar Gonzalez (External)	4/07/26, 9:55:28 AM	4/07/26, 1(	23m 42s	cgonzalez@ethoseng.net
Austin Wilson (External)	4/07/26, 9:58:43 AM	4/07/26, 1(	20m 9s	a.wilson@cahsinc.com
Ed Hendrix	4/07/26, 9:59:05 AM	4/07/26, 1(	19m 49s	EdHendrix@victoriaair.com
Aircool Tech (Unverified)	4/07/26, 10:00:33 AM	4/07/26, 1(	18m 21s	
Debjit Kundu (External)	4/07/26, 10:01:32 AM	4/07/26, 1(	17m 26s	Debjit@technostruct.com
Kelly (Unverified)	4/07/26, 10:02:28 AM	4/07/26, 1(	16m 25s	
Rosenbaum, Myles	4/07/26, 10:04:49 AM	4/07/26, 1(	14m 21s	Myles.Rosenbaum@carrier.com
Samuel Saldana (External)	4/07/26, 10:07:08 AM	4/07/26, 1(	11m 48s	Samuel.Saldana@SpawGlass.com
Leslie Benavides (External)	4/07/26, 10:16:26 AM	4/07/26, 1(	5m 31s	Leslie.Benavides@SpawGlass.com

Attachment C: Revised Form 10: Price Proposal Form

RFP#196-26-ISD-RFP

Form 10- Price Proposal Form

Section 1: Proposal Pricing

1. BASE PROPOSAL – COST BREAKDOWN ("BUCKETS")

The undersigned proposes to furnish all labor, materials, equipment, supervision, and services necessary to complete the Work in accordance with the Contract Documents, including all addenda. The Base Proposal shall be allocated among the following categories:

GENERAL CONDITIONS/PROJECT OVERHEAD

$_____(number)

_____(words)

MECHANICAL (HVAC & CONTROLS)

$_____(number)

_____(words)

ELECTRICAL (LIGHTING & POWER)

$_____(number)

_____(words)

STRUCTURAL

$_____(number)

_____(words)

CIVIL/UTILITIES

$_____(number)

_____(words)

ROOFING

$_____(number)

_____(words)

ALLOWANCES

$_____(number)

_____(words)

2. BASE PROPOSAL GRAND TOTAL:

The total of the above cost breakdown shall equal the Base Proposal amount and shall include all Work required by the Contract Documents, except for the scope identified in the Alternate Proposal.

[Proposal amount includes Allowances as per specifications section 012100].

$_____(number)

_____(words)

3. ALTERNATE PROPOSAL #1 - COST BREAKDOWN ("BUCKETS"):

Work related to DOAS-5, RTU-1, RTU-2, EF-9 and associated controls and structural. See plans for more information.

The undersigned proposes to furnish all labor, materials, equipment, supervision, and services necessary to complete the Work in accordance with the Contract Documents, including all addenda. The Alternate Proposal shall be allocated among the following categories:

GENERAL CONDITIONS/PROJECT OVERHEAD

$_____(number)

_____(words)

MECHANICAL (HVAC & CONTROLS)

$_____(number)

_____(words)

ELECTRICAL (LIGHTING & POWER)

$_____(number)

_____(words)

STRUCTURAL

$_____(number)

_____(words)

ROOFING

$_____(number)

_____(words)

4. ALTERNATE PROPOSAL #2a:

Work related to Distech Controls for the Based Bid Scope of Work. Indicate Add or Deduct.

$_____(number) Add_____ or Deduct_____

_____(words)

5. ALTERNATE PROPOSAL #2b:

Work related to Distech Controls for Alternate #1 Scope of Work. Indicate Add or Deduct.

$_____(number) Add_____ or Deduct_____

_____(words)

6. SUBSTANTIAL COMPLETION DATE PROPOSED BY CONTRACTOR of the project in its entirety

_____(Month/Day/Year)

Section 2: Contractors, Subcontractors, Manufacturers, Products, Material Suppliers and Equipment Suppliers for the principal portions of the work.

NAME(S) OF SUB-CONTRACTORS:

_____

_____

NAME(S) OF EQUIPMENT SUPPLIERS:

CHILLERS. /AHUS/PUMPS:

_____

_____

_____

_____

CONTROLS:

_____

_____

OTHER:

_____

_____

_____

Section 3: Certification and Signature

Representative Name: _____

Title: _____

Signature _____

Date: _____

1126 South Commerce
Harlingen, TX 78550
Off: (956) 230-3435
Fax: (956) 720-0830
www.ethoseng.net

April 17, 2026 04/17/2026

HVAC Upgrades at Brownsville Animal Regulation and Care Facility

ADDENDUM NO. 1

A. PURPOSE AND INTENT

This addendum is issued for the purpose of modifying the plans for the project referenced above. This addendum shall become part of the contract and all contractors shall be bound by its content. All aspects of the drawings not covered herein shall remain the same.
The General Conditions shall govern all parts of the work and apply in full force to this addendum.

B. SCOPE

I. Specifications

1. Clarification of Terminology – Division 00 and 01
   a) References to "Architect" in Divisions 00 and 01 specifications are intended to mean the Owner's designated design professional. For this project, as defined in the Contract Documents and General Conditions, the Engineer is the Owner's designated representative and primary point of contact. Accordingly, any reference to "Architect" in Divisions 00 and 01 shall be interpreted as "Engineer."

2. Section 230900 and 230993 – Instrumentation and Controls and HVAC Sequences of Operation:
   a) Distech Controls, provided by Perry Mechanical Systems, has been added as an approved list of HVAC Controls Manufacturer/Vendor under Alternate #2a and #2b. Refer to the revised bid form. The Contractor shall clearly indicate whether this Alternate represents an Add or a Deduct. Alternate 2a is for Distech Controls for the Base Bid Scope of Work and Alternate 2b is for Distech Controls for the Alternate #1 Scope of Work.

   b) Under the Base Bid, provide the differential pressure (DP) sensor, motorized bypass valve, and all associated materials, controls, and sequence of operation at DOAS-4. In the event Alternate #1 is accepted, this scope shall instead be provided

for DOAS-5 and not DOAS-4. Coordinate with Prime, Mechanical and Controls Contractor.

3. Section 232113.13 – Underground Hydronic Piping:
    a) See attached specifications for underground piping and insulation.
    b) Provide thrust blocks, and site work per trench details in the drawings, and install piping per manufacturer's recommendations.

II. Drawings

1. Sheet M3.4:
    a) Revised Building Chilled Water Schematic Diagram. See attached sheet.
    c) Clarification: Under the Base Bid, provide the differential pressure (DP) sensor, motorized bypass valve, and all associated materials, controls, and sequence of operation at DOAS-4. In the event Alternate #1 is accepted, this scope shall instead be provided for DOAS-5 and not DOAS-4. Provide pipes and valves sizes accordingly. Coordinate with Prime, Mechanical and Controls Contractor.

2. Sheet M4.1:
    a) VFD Schedule Notes Clarification:
        i. All VFDs shall be NEMA 4X for outdoors use.

VFD SCHEDULE

MARK	EQUIPMENT SERVED	VFD QTY	MOTOR HP	FL AMPS	ELECTRICAL V/P/Hz	MANUFACTURER & MODEL NUMBER	NOTES
PUMPS							
VFD-SCHWP-1	SCHWP-1	1	7.5	11	480/3/60	DANFOSS VLT-HVAC	ALL
VFD-SCHWP-2	SCHWP-2	1	7.5	11	480/3/60	DANFOSS VLT-HVAC	ALL

NOTES: NEMA 4X ENCLOSURE FOR OUTDOORS USE

1. PROVIDE ~~NEMA 3R ENCLOSURE FOR VFD LOCATED INDOORS~~.
2. PROVIDE INTEGRAL DISCONNECT.
3. PROVIDE BYPASS WITH VFD'S.

3. Sheet M5.2:
    a) Added Chilled Water Piping Site Trench Detail. See attached sheet.
    b) Added Pipe Penetration at Ground Detail. See attached sheet.
    c) Added Thrust Block Detail. See attached sheet.
    d) Added Typical Pipe Configuration Detail. See attached sheet

4. Sheet E3.1:
    a) Revised Electrical Renovation Floor Plan. See attached sheet.

5. Sheet E4.1:
    a) Revised Upgrades Electrical Riser Diagram. See attached sheet.

6. Sheet E5.1:
    a) Revised Schedules. See attached sheet.

7. Sheet E6.1:
    a) Added Detail. See attached sheet.

8. Structural Engineering Sheets have been revised. See revisions on attached sheets:
    a) S2.1
    b) S3.1
    c) S3.2

SECTION 232113.13 - UNDERGROUND HYDRONIC PIPING

PART 1 - GENERAL

1.1 RELATED DOCUMENTS

A. Drawings and general provisions of the Contract, including General and Supplementary Conditions and Division 01 Specification Sections, apply to this Section.

1.2 SUMMARY

A. This Section includes underground insulated piping outside the building for distribution of chilled water.

1.3 PERFORMANCE REQUIREMENTS

A. Provide components and installation capable of producing hydronic piping systems with the following minimum working-pressure ratings:

1. Chilled-Water Piping: 150 psig at 200 deg F.

1.4 ACTION SUBMITTALS

A. Product Data: For the following:

1. Conduit piping.
2. Cased piping.
3. Loose-fill insulation.

B. Shop Drawings: For underground hydronic piping. Signed and sealed by a professional engineer.

1. Calculate requirements for expansion compensation for underground piping.
2. Show expansion compensators, offsets, and loops with appropriate materials to allow piping movement in the required locations. Show anchors and guides that restrain piping movement with calculated loads, and show concrete thrust block dimensions.
3. Show pipe sizes, locations, and elevations. Show piping in trench, conduit, and cased pipe with details showing clearances between piping, and show insulation thickness.

1.5 INFORMATIONAL SUBMITTALS

A. Profile Drawings: Show system piping in elevation. Draw profiles at horizontal scale of not less than 1 inch equals 50 feet and at vertical scale of not less than 1 inch equals 5 feet. Indicate manholes and piping. Show types, sizes, materials, and elevations of other utilities crossing hydronic piping.

B. Qualification Data: For qualified Installer.

C. Welding certificates.

D. Source quality-control reports.

E. Field quality-control reports.

1.6 QUALITY ASSURANCE

A. Welding Qualifications: Qualify procedures and personnel according to ASME Boiler and Pressure Vessel Code: Section IX.

1. Comply with provisions in ASME B31.9, "Building Services Piping."
2. Certify that each welder has passed AWS qualification tests for welding processes involved and that certification is current.

B. ASME Compliance: Comply with ASME B31.9, "Building Services Piping," for materials, products, and installation.

1.7 PROJECT CONDITIONS

A. Existing Utilities: Do not interrupt utilities serving facilities occupied by Owner or others unless permitted under the following conditions and then only after arranging to provide temporary utility services according to requirements indicated:

1. Notify Architect no fewer than two days in advance of proposed utility interruptions.
2. Do not proceed with utility interruptions without Architect's written permission.

PART 2 - PRODUCTS

2.1 STEEL PIPES AND FITTINGS

A. Steel Pipe: ASTM A 53/A 53M, black with plain ends; type, grade, and wall thickness as indicated in "Piping Application" Article.

B. Steel Welding Fittings: ASME B16.9 and ASTM A 234/A 234M, seamless or welded.

1. Welding Filler Metals: Comply with AWS D10.12M/D10.12 for welding materials appropriate for wall thickness and chemical analysis of steel pipe being welded.

C. Nipples: ASTM A 733, made of same materials and wall thicknesses as pipe in which they are installed.

D. Flange Bolts and Nuts: ASME B18.2.1, carbon steel, unless otherwise indicated.

2.2 CASED PIPING SYSTEM

A. Description: Factory-fabricated piping with carrier pipe, insulation, and casing.

B. Manufacturers:

1. Insul-Tek Piping Systems, Inc.
2. PERMA-PIPE, Inc.
3. Rovanco Piping Systems, Inc.
4. Thermacor Process, L.P.
5. Thermal Pipe Systems.
6. Urecon Ltd.
7. Insul-pipe

C. Carrier Pipe:

1. Design Basis: High-density polyethylene, SDR 11. Heat fusion joints per manufacturer's instructions.

D. Carrier Pipe Insulation:

1. Polyurethane Foam Pipe Insulation: Rigid, cellular, high-pressure injected between carrier pipe and jacket.

   a. Comply with ASTM C 591; thermal conductivity (k-value) shall not exceed 0.13 Btu x in./h x sq. ft. x deg F at 75 deg F after 180 days of aging.
   b. Moisture Absorption: ASTM D 2842, maximum 0.054 percent by volume.
   c. Minimum 90 percent closed cell.
   d. Dry Density: 2 lb/cu. ft. maximum.
   e. Compressive Strength: 35 psig minimum at 5 percent deformation.
   f. Water-Vapor Transmission: 1.26 perm inches according to ASTM E 96.

E. Casing: HDPE or PVC.

F. Casing accessories include the following:

1. Joint Kit: Half-shell, pourable or split insulation, casing sleeve, and shrink-wrap sleeve.
2. Expansion Blanket: Elastomeric foam, formed to fit over piping.
3. End Seals: Shrink wrap the casing material to seal watertight around casing and carrier pipe.

G. Manholes: Black steel with lifting eyes.

1. Finish: Spray-applied urethane, minimum 30 mils thick.
2. Access: 30-inch-diameter waterproof cover with gasket, ladder, and two 6-inch vents, one high and one low, extending above grade with rain caps.
3. Conduit Stub-Outs and Seals: Welded steel with drain and vent openings.
4. Sump: 12 inches in diameter, 12 inches deep.
5. Floatation Anchor: Oversized bottom keyed into concrete base.

H. Source Quality Control: Factory test the carrier pipe to 150 percent of the operating pressure of system. Furnish test certificates.

PART 3 - EXECUTION

3.1 EARTHWORK

A. See Section 312000 "Earth Moving" for excavating, trenching, and backfilling.

3.2 PIPING APPLICATION

A. Chilled-Water Piping: Cased piping with polyurethane carrier-pipe insulation.

1. Insulation Thickness: 2 inches.

3.3 PIPING INSTALLATION

A. Drawing plans, schematics, and diagrams indicate general location and arrangement of piping systems. Indicate piping locations and arrangements if such were used to size pipe and calculate friction loss, expansion, pump sizing, and other design considerations. Install piping as indicated unless deviations to layout are approved on Coordination Drawings.

B. Remove standing water in the bottom of trench.

C. Do not backfill piping trench until field quality-control testing has been completed and results approved.

D. Install piping at uniform grade of 0.2 percent. Install drains, consisting of a tee fitting, NPS 3/4 ball valve, and short NPS 3/4 threaded nipple with cap, at low points and elsewhere as required for system drainage. Install manual air vents at high points.

E. In conduits, install drain valves at low points and manual air vents at high points.

F. Install components with pressure rating equal to or greater than system operating pressure.

G. Install piping free of sags and bends.

H. Install fittings for changes in direction and branch connections.

I. See Section 230517 "Sleeves and Sleeve Seals for HVAC Piping" for sleeves and mechanical sleeve seals through exterior building walls.

J. Secure anchors with concrete thrust blocks. Concrete is specified in Section 033000 "Cast-in-Place Concrete." **Install anchors and concrete thrust blocks per manufacturer's installation instructions for pipe.**

K. Connect to hydronic piping where it passes through the building wall. Hydronic piping inside the building is specified in Division 15 Section "Hydronic Piping."

3.4 JOINT CONSTRUCTION

A. See Section 330500 "Common Work Results for Utilities" for basic piping joint construction.

B. Ream ends of pipes and tubes and remove burrs. Bevel plain ends of steel pipe.

C. Remove scale, slag, dirt, and debris from inside and outside of pipe and fittings before assembly.

D. Welded Joints: Construct joints according to AWS D10.12M/D10.12, using qualified processes and welding operators according to "Quality Assurance" Article.

E. **Install and join HDPE piping per manufacturer's installation instructions.**

3.5 IDENTIFICATION

A. Install continuous plastic underground warning tapes during back filling of trenches for underground hydronic piping. Locate tapes 6 to 8 inches below finished grade, directly over piping. See Section 312000 "Earth Moving" for warning-tape materials and devices and their installation.

3.6 FIELD QUALITY CONTROL

A. Perform tests and inspections.

1. Manufacturer's Field Service: Engage a factory-authorized service representative to inspect components, assemblies, and equipment installations, including connections, and to assist in testing.

B. Tests and Inspections:

1. Prepare hydronic piping for testing according to ASME B31.9 and as follows:

   a. Leave joints, including welds, uninsulated and exposed for examination during test.
   b. Fill system with water. Where there is risk of freezing, air or a safe, compatible liquid may be used.
   c. Use vents installed at high points to release trapped air while filling system.

2. Test hydronic piping as follows:
   a. Subject hydronic piping to hydrostatic test pressure that is not less than 1.5 times the design pressure.
   b. After hydrostatic test pressure has been applied for 10 minutes, examine joints for leakage. Remake leaking joints using new materials and repeat hydrostatic test until no leaks exist.

C. Prepare test and inspection reports.

END OF SECTION 232113.13

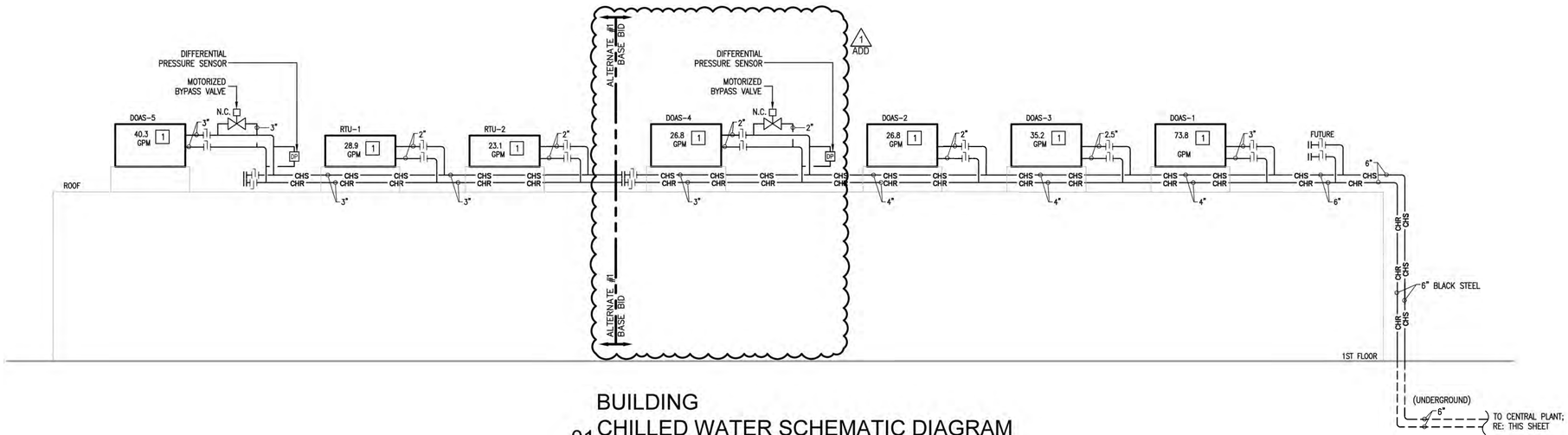

01 BUILDING CHILLED WATER SCHEMATIC DIAGRAM

SCALE : NOT TO SCALE

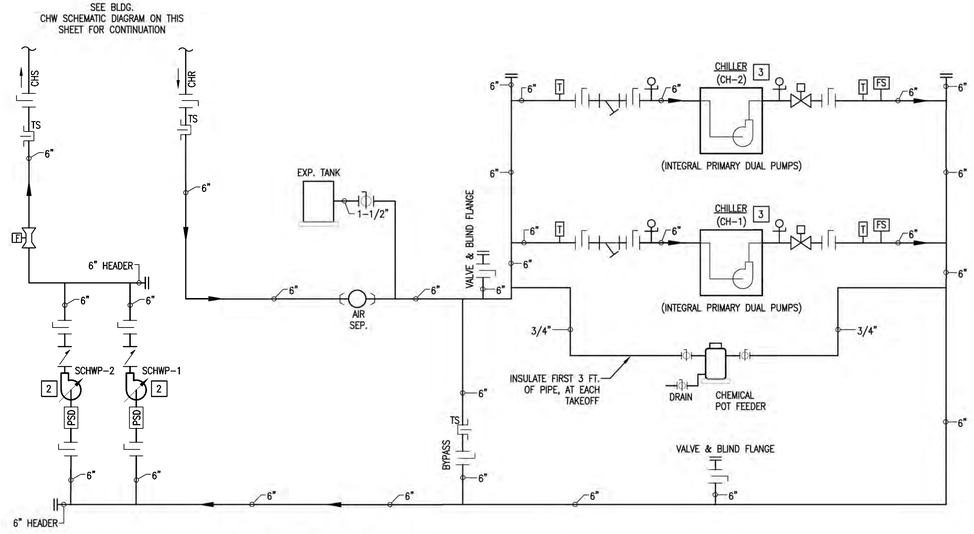

02 CENTRAL PLANT CHILLED WATER SCHEMATIC DIAGRAM

SCALE : NOT TO SCALE

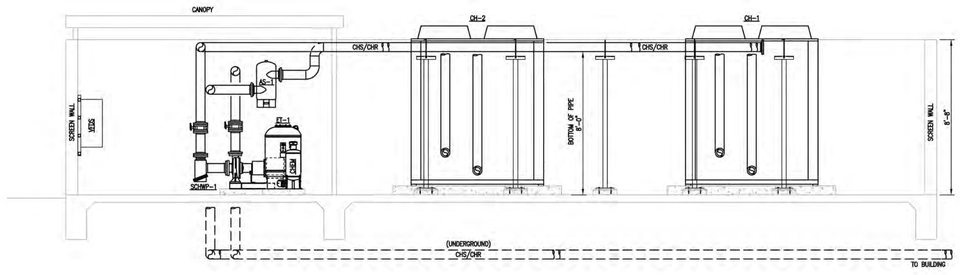

03 CENTRAL PLANT MECHANICAL ELEVATION

SCALE : 1/4" = 1'-0"

GENERAL NOTES:

1. ALL PIPING WELDS MUST BE WIRE-BRUSHED AND PAINTED A MINIMUM OF 12" ON EITHER SIDE OF WELD PRIOR TO INSULATION.
2. CLEAN AND PREPARE SURFACE OF CHILLED WATER PIPING BEFORE INSULATING. APPLY CORROSION COATING TO ALL PIPING. REFER TO SPECIFICATIONS FOR MORE INFORMATION.
3. INSULATE PER SPECIFICATIONS ALL PIPING, VALVES, FITTINGS, PUMP BODIES AND COLD SURFACES THAT ARE CAPABLE OF GENERATING CONDENSATION. FIBERGLASS INSULATION WILL NOT BE ALLOWED.
4. PRIOR TO INSTALLATION OF EQUIPMENT, VERIFY THAT MANUFACTURER RECOMMENDED AND CODE REQUIRED CLEARANCES ARE AVAILABLE.
5. INSTALL PIPES AND DUCTS AS HIGH AS POSSIBLE TO ALLOW MAXIMUM POSSIBLE HEADROOM. MIN. 9' AFF.
6. PROVIDE P/T TEST PORT WITHIN 6 INCHES OF EVERY PRESSURE GAGE AND THERMOWELL. SEE PIPING SCHEMATIC FOR LOCATIONS.
7. REFER TO HYDRONIC PIPING SCHEMATICS FOR DETAILS.
8. FOR ALL PIPING SUPPORTS LOCATED OUTDOORS, PROVIDE THE FOLLOWING:
   A) POLYAMIDE PRIME COAT OF DEVOE PAINTS, DEVRAN 201.
   B) INTERMEDIATE TOP COAT OF DEVOE PAINTS, DEVRAN 224HS.
   C) TOP COAT OF DEVOE PAINTS, DEVTHANE 379.
9. GPM's ARE SHOWN FOR VERIFICATION PURPOSE ONLY. DO NOT USE THIS DATA FOR TAB. IN CASE OF CONFLICT, OR IF FLOW DATA DO NOT MATCH WITH THOSE FOR SCHEDULED EQUIPMENT, USE LARGER OF THE TWO.
10. REFER TO SPECIFICATIONS FOR CONTROL COMPONENTS, DEVICES, AND SENSORS TO BE COORDINATED WITH MECHANICAL WORK.
11. AT LOWEST POINT IN PIPING ENTERING CHILLER BARRELS, PROVIDE 6" LONG DRAIN NIPPLES AND BALL VALVES FOR DRAINING CHILLER.
12. MINIMUM PIPE SIZE SHALL BE 1".

KEYED NOTES:

1. PROVIDE 2-WAY CONTROL VALVE AT AHU. REFER TO CHILLED WATER COIL CONNECTION SCHEMATIC WITH 2-WAY VALVE ON DETAIL SHEET.
2. REFER TO PUMP DETAIL ON DETAIL SHEET.
3. REFER TO CHILLER PIPING CONNECTION DETAIL ON DETAIL SHEET.

LEGEND:

- AS — AIR SEPARATOR
- AUTOMATIC VALVE
- MANUAL VALVE
- STRAINER
- FM — FLOW METER
- PSD — PUMP SUCTION DIFFUSER
- BALL VALVE
- M — WATER METER
- BLIND FLANGE
- PUMP
- PUMP WITH VFD
- PRESSURE GAUGE
- NEW EQUIPMENT
- NEW PIPING
- TS — THERMOWELL FOR DDC TEMPERATURE SENSOR
- FS — FLOW SWITCH
- CHECK VALVE
- T — THERMOMETER

NO:	REVISION:	BY:
1 ADD	04/17/2026	ETHOS

COPY NO:

CESAR A. GONZALEZ 108611 LICENSED PROFESSIONAL ENGINEER 03.23.2026

HVAC UPGRADES AT BROWNSVILLE ANIMAL REGULATION AND CARE FACILITY

OLMITO, TEXAS

F.M. 511

ethos engineering
1126 SOUTH COMMERCE ST.
HARLINGEN, TX
PHONE: 956-220-3435
TEXAS REGISTERED ENGINEERING FIRM
F-15986

DATE:	MARCH 23. 2026
CHECKED BY:	C.A.G.
DRAWN BY:	P.M.
PROJECT NO.:	24v67
CAD FILE:	-
SHEET:	M3.4

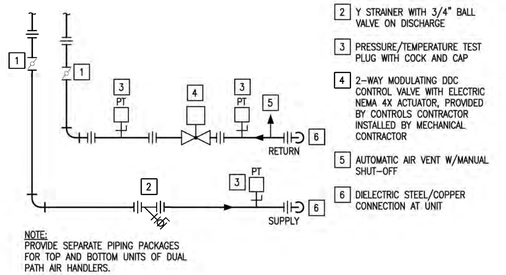

KEYED NOTES

1. 2-1/2" & LARGER BUTTERFLY VALVES FOR SHUTOFF, LINE SIZE; BALL VALVES FOR 2" AND BELOW
2. Y STRAINER WITH 3/4" BALL VALVE ON DISCHARGE
3. PRESSURE/TEMPERATURE TEST PLUG WITH COCK AND CAP
4. 2-WAY MODULATING DDC CONTROL VALVE WITH ELECTRIC NEMA 4X ACTUATOR, PROVIDED BY CONTROLS CONTRACTOR INSTALLED BY MECHANICAL CONTRACTOR
5. AUTOMATIC AIR VENT W/MANUAL SHUT-OFF
6. DIELECTRIC STEEL/COPPER CONNECTION AT UNIT

NOTE:
PROVIDE SEPARATE PIPING PACKAGES FOR TOP AND BOTTOM UNITS OF DUAL PATH AIR HANDLERS.

01 CHILLED WATER COIL CONNECTION SCHEMATIC
SCALE : NOT TO SCALE

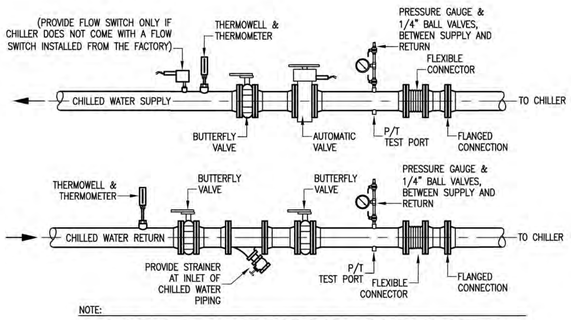

NOTE:
1. DO NOT PERFORM WELDING IN CLOSE PROXIMITY TO THE CHILLER BARRELS AND COMPRESSORS. ALL PIPING CONNECTIONS TO THE CHILLER SHALL BE FLANGED OR GROOVED TYPE.

02 CHILLER PIPING CONNECTION DETAIL
SCALE : NOT TO SCALE

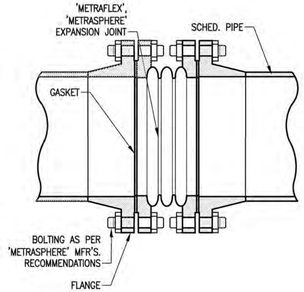

APPROXIMATELY EVERY 250 FEET

03 TYPICAL EXPANSION JOINT
SCALE : NOT TO SCALE

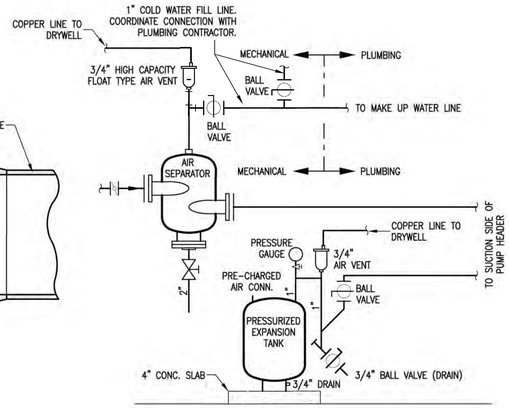

04 AIR SEPARATOR & EXPANSION TANK DETAIL
SCALE : NOT TO SCALE

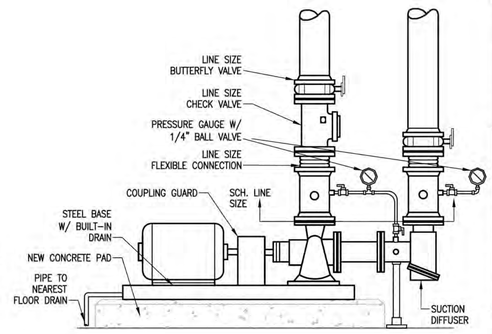

NOTES:
1. PIPE SIZE INDICATED ON DRAWING SHALL BE FULL SIZE TO POINT OF CONNECTION TO PUMP FLANGES. PIPING COMPONENTS SUCH AS VALVES, STRAINERS, FLEXIBLE CONNECTORS SHALL BE SAME SIZE AS PIPING SERVING PUMPS.
2. INSULATE CHILLED WATER PUMPS AS PER SPECIFICATIONS.

05 END SUCTION PUMP DETAIL
SCALE : NOT TO SCALE

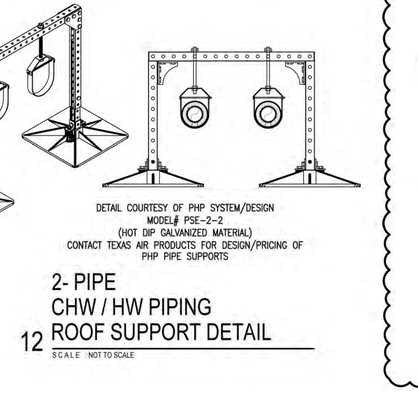

06 CHEMICAL TREATMENT POT FEEDER
SCALE : NOT TO SCALE

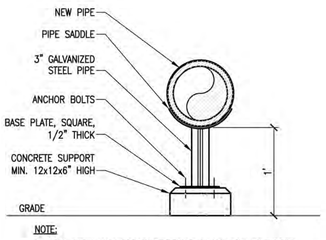

NOTE:
1. ALL STEEL EXPOSED TO EXTERIOR SHALL BE HOT DIPPED GALVANIZED & PAINTED WITH EPOXY PAINT.

09 CONCRETE PIPE SUPPORT DETAIL
SCALE : NOT TO SCALE

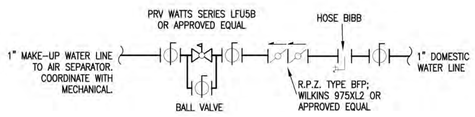

07 MAKE-UP WATER DETAIL
SCALE : NOT TO SCALE

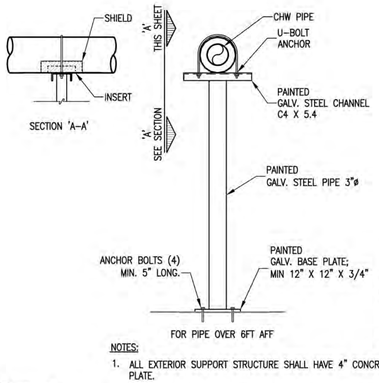

NOTES:
1. ALL EXTERIOR SUPPORT STRUCTURE SHALL HAVE 4" CONCRETE PAD UNDER BASE PLATE.
2. ALL STEEL EXPOSED TO EXTERIOR SHALL BE HOT DIPPED GALVANIZED & PAINTED WITH EPOXY PAINT.

08 PIPE SUPPORT STRUCTURE
SCALE : NOT TO SCALE

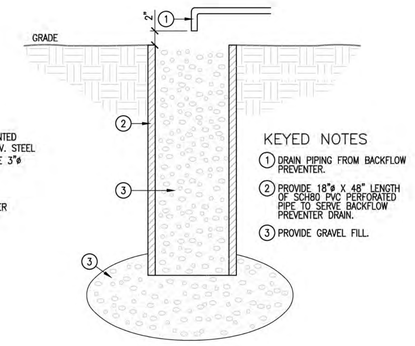

KEYED NOTES

1. DRAIN PIPING FROM BACKFLOW PREVENTER.
2. PROVIDE 18"ø X 48" LENGTH OF SCH80 PVC PERFORATED PIPE TO SERVE BACKFLOW PREVENTER DRAIN.
3. PROVIDE GRAVEL FILL.

10 DRYWELL DETAIL
SCALE : NOT TO SCALE

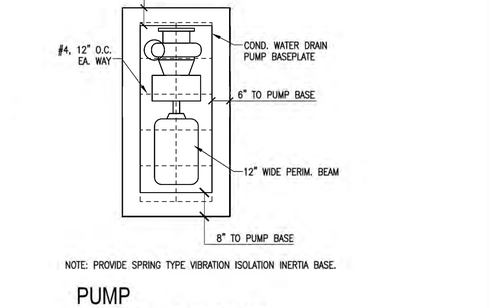

NOTE: PROVIDE SPRING TYPE VIBRATION ISOLATION INERTIA BASE.

11 PUMP HOUSEKEEPING PAD
SCALE : NOT TO SCALE

DETAIL COURTESY OF PHP SYSTEM/DESIGN
MODEL# PSE-2-2
(HOT DIP GALVANIZED MATERIAL)
CONTACT TEXAS AIR PRODUCTS FOR DESIGN/PRICING OF PHP PIPE SUPPORTS

12 2- PIPE CHW / HW PIPING ROOF SUPPORT DETAIL
SCALE : NOT TO SCALE

1 ADD

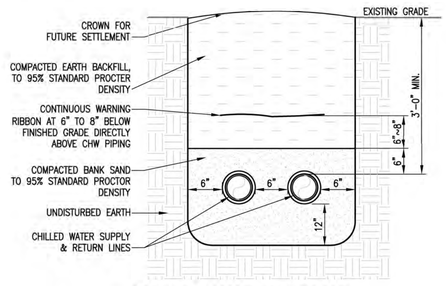

13 CHILLED WATER PIPING SITE TRENCH DETAIL
SCALE : NOT TO SCALE

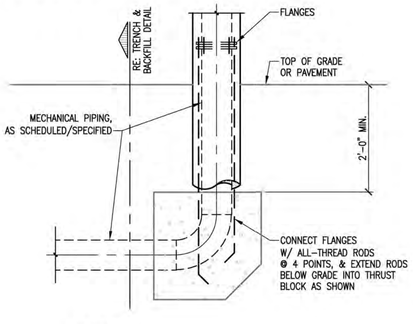

14 PIPE PENETRATION AT GROUND
SCALE : NOT TO SCALE

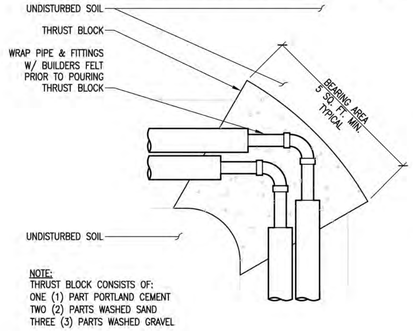

NOTE:
THRUST BLOCK CONSISTS OF:
ONE (1) PART PORTLAND CEMENT
TWO (2) PARTS WASHED SAND
THREE (3) PARTS WASHED GRAVEL

15 THRUST BLOCK DETAIL
SCALE : NOT TO SCALE

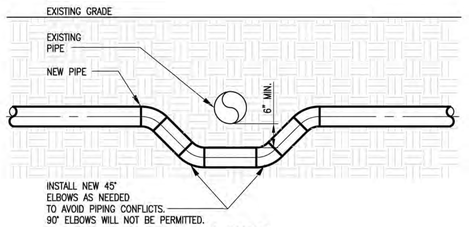

INSTALL NEW 45° ELBOWS AS NEEDED TO AVOID PIPING CONFLICTS. 90° ELBOWS WILL NOT BE PERMITTED.

16 TYPICAL PIPE CONFIGURATION DETAIL
SCALE : NOT TO SCALE

NO:	REVISION:	BY:
1 ADD	04/17/2026	ETHOS

COPY NO:

CESAR A. GONZALEZ
108611
LICENSED
PROFESSIONAL ENGINEER
03.23.2026

HVAC UPGRADES AT BROWNSVILLE ANIMAL REGULATION AND CARE FACILITY

OLMITO, TEXAS

F.M. 511

ethos engineering
1126 SOUTH COMMERCE ST.
HARLINGEN, TX.
PHONE: 956-230-3435
TEXAS REGISTERED ENGINEERING FIRM
F-15598

DATE:	MARCH 23, 2026
CHECKED BY:	C.A.G.
DRAWN BY:	P.M.
PROJECT NO.:	24v67
CAD FILE:	-
SHEET:	M5.2

ELECTRICAL KEYED NOTES:

1. APPROXIMATE LOCATION OF NEW PANELBOARD SERVING NEW HVAC EQUIPMENT.
2. APPROXIMATE LOCATION OF NEW PANELBOARD SERVING NEW EF.
3. CONNECT NEW EF. RETAIN AND REUSE EXISTING BRANCH CIRCUIT.
4. CONNECT DDC PANELS TO NEW PANEL "C"; BRANCH CIRCUIT: 1/2" – 2#12 & #12G.
5. CONNECT NEW EF. SEE EXHAUST FAN CONNECTION SCHEDULE.
6. CONNECT NEW HVAC EQUIPMENT. SEE CONNECTION SCHEDULE.

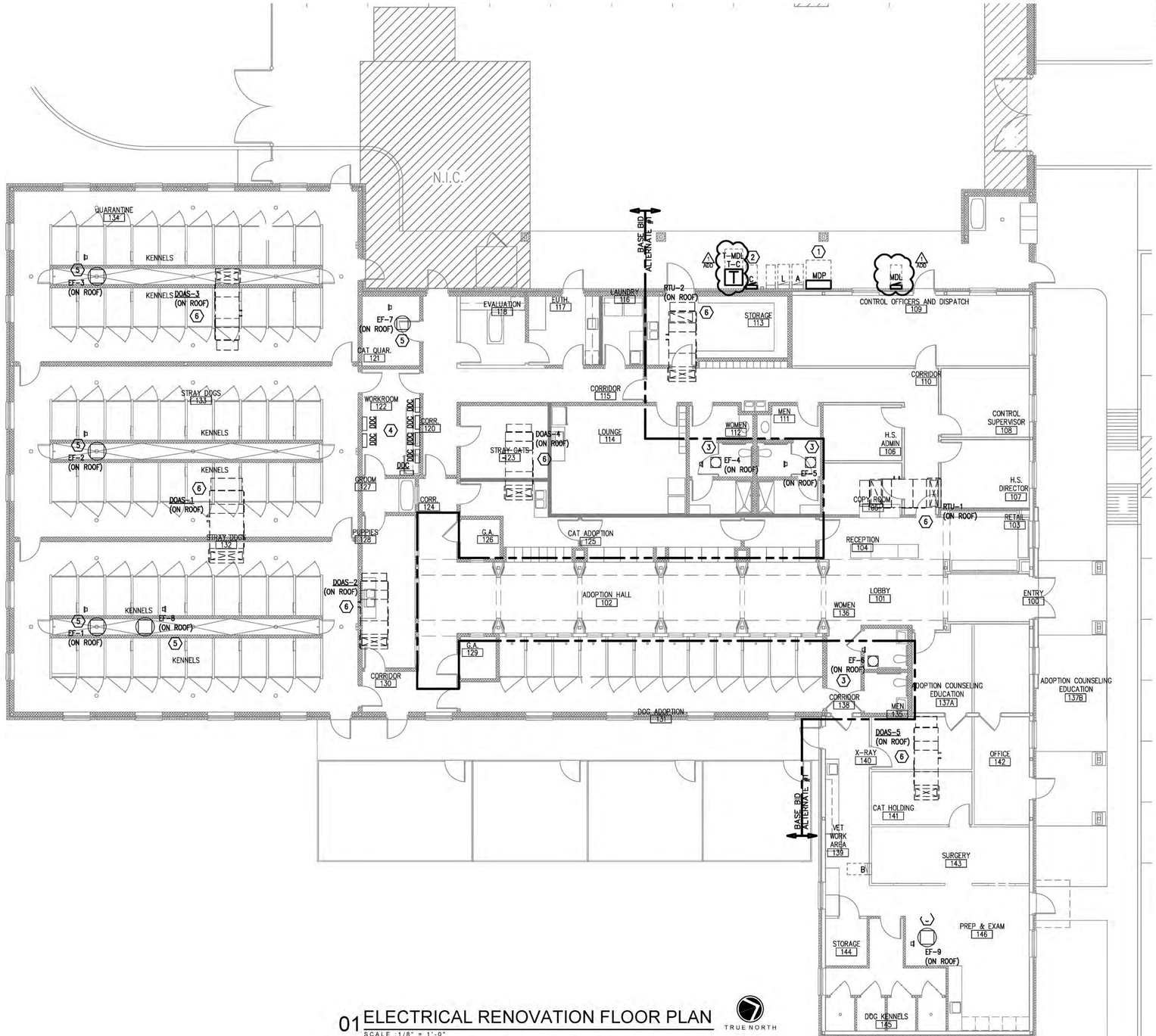

01 ELECTRICAL RENOVATION FLOOR PLAN
SCALE : 1/8" = 1'-0"

TRUE NORTH

NO:	REVISION:	BY:
ADD 1	04/17/2026	ETHOS

COPY NO:

STATE OF TEXAS
CESAR A. GONZALEZ
108611
LICENSED PROFESSIONAL ENGINEER
03.23.2026

HVAC UPGRADES AT BROWNSVILLE ANIMAL REGULATION AND CARE FACILITY

OLMITO, TEXAS

F.M. 511

ethos engineering
1126 SOUTH COMMERCE ST.
HARLINGEN, TX
PHONE: 956.230.3435
TEXAS REGISTERED ENGINEERING FIRM F-15998

DATE:	MARCH 23. 2026
CHECKED BY:	C.A.G.
DRAWN BY:	C.G.
PROJECT NO.:	24v57
CAD FILE:	-
SHEET:	E3.1

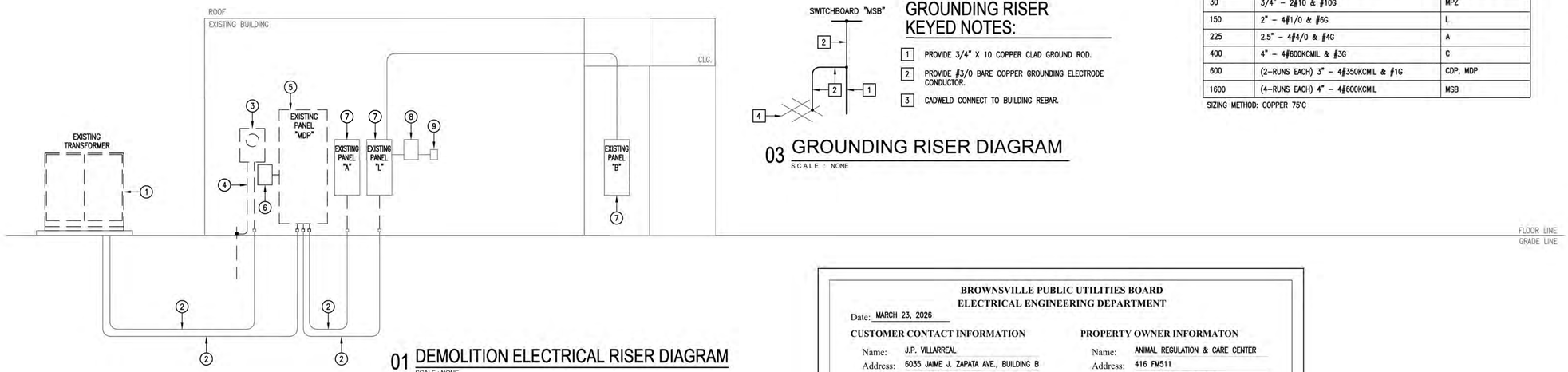

01 DEMOLITION ELECTRICAL RISER DIAGRAM

SCALE : NONE

GROUNDING RISER KEYED NOTES:

1. PROVIDE 3/4" X 10 COPPER CLAD GROUND ROD.
2. PROVIDE #3/0 BARE COPPER GROUNDING ELECTRODE CONDUCTOR.
3. CADWELD CONNECT TO BUILDING REBAR.

03 GROUNDING RISER DIAGRAM

SCALE : NONE

FEEDER SCHEDULE:

FEEDER AMPS	CONDUIT AND FEEDER	FEEDING THESE DEVICES
30	3/4" – 2#10 & #10G	MPZ
150	2" – 4#1/0 & #6G	L
225	2.5" – 4#4/0 & #4G	A
400	4" – 4#600KCMIL & #3G	C
600	(2–RUNS EACH) 3" – 4#350KCMIL & #1G	CDP, MDP
1600	(4–RUNS EACH) 4" – 4#600KCMIL	MSB

SIZING METHOD: COPPER 75°C

KEYED NOTES:

1. EXISTING ELECTRIC UTILITY PAD MOUNT TRANSFORMER. COORDINATE REMOVAL WITH BPUB.
2. DISCONNECT AND REMOVE EXISTING PANELBOARD FEEDER. ABANDON RACEWAY IN PLACE AND CAP.
3. DISCONNECT AND REMOVE EXISTING ELECTRIC UTILITY METER ALONG WITH RELATED WIRING, RACEWAY, AND SUPPORT HARDWARE.
4. DISCONNECT AND REMOVE EXISTING GROUNDING ALONG WITH RELATED WIRING, RACEWAY AND SUPPORT HARDWARE.
5. DISCONNECT AND REMOVE EXISTING PANELBOARD ALONG WITH RELATED WIRING, RACEWAY AND SUPPORT HARDWARE. TEMPORARILY DISCONNECT EXISTING BRANCH CIRCUITS TO REMAIN.
6. DISCONNECT AND REMOVE EXISTING SPD ALONG WITH RELATED WIRING, RACEWAY AND SUPPORT HARDWARE.
7. EXISTING PANELBOARD TO REMAIN AS IS.
8. EXISTING LIGHTING CONTACTOR TO REMAIN AS IS.
9. EXISTING TIME CLOCK TO REMAIN AS IS.

MSB

ROOM CENTRAL PLANT — VOLTS 480Y/277V 3P 4W — AIC 65,000
MOUNTING FLOOR — BUS AMPS 1600 — MAIN BKR MLO
FED FROM UTILITY — NEUTRAL 100% — LUGS STANDARD
NOTE PROVIDE PHENOLIC CIRCUIT BREAKER IDENTIFICATION NAMETAGS PER SPECIFICATIONS.

CKT #	BREAKER TRIP/POLES	CIRCUIT DESCRIPTION	LOAD KVA A	B	C	FEEDER RACEWAY AND CONDUCTORS
1	600/3	PANEL CDP	86.5	86.5	86.1	SEE FEEDER SCHEDULE
2	600/3	PANEL MDP	125	124	124	SEE FEEDER SCHEDULE
3	400/3	SPARE	0	0	0	–
		TOTAL CONNECTED KVA BY PHASE	212	211	210	

	CONN KVA	CALC KVA			CONN KVA	CALC KVA	
LIGHTING	0.395	0.494	(125%)	CONTINUOUS	1.37	1.72	(125%)
LARGEST MOTOR	120	30	(25%)	HEATING	235	0	(0%)
MOTORS	50.8	50.8	(100%)	COOLING	240	240	(100%)
RECEPTACLES	0.36	0.36	(50%>10)	DIVERSE	104	104	(100%)
				TOTAL LOAD		428	
				BALANCED 3–PHASE LOAD		515 A	

NOTES:
1. PROVIDE NEMA 4X SS OUTDOOR ENCLOSURE.
2. PROVIDE INTEGRAL MOUNTED 200KA "SPD".
3. PROVIDE INTEGRAL DIGITAL MULTI–METER.
4. PROVIDE A MIMIC BUS.
5. LABEL EACH BREAKER WITH AN ENGRAVED NAMEPLATE.
6. PROVIDE SWITCHBOARD SERVICE ENTRANCE RATED.
7. PROVIDE BRANCH CIRCUIT BREAKERS THERMAL MAGNETIC TYPE.
8. PROVIDE SWITCHBOARD TO COMPLY WITH 2020 NEC 230.71(B).

BROWNSVILLE PUBLIC UTILITIES BOARD
ELECTRICAL ENGINEERING DEPARTMENT

Date: MARCH 23, 2026

CUSTOMER CONTACT INFORMATION

Name: J.P. VILLARREAL
Address: 6035 JAIME J. ZAPATA AVE., BUILDING B
BROWNSVILLE, TX 78520
Phone: (956) 589–0567
Fax:
Signed:

PROPERTY OWNER INFORMATON

Name: ANIMAL REGULATION & CARE CENTER
Address: 416 FM511
BROWNSVILLE, TX 78575
Phone: (956) 544–7351
Fax:
Signed:

PROPERTY INFORMATION

Street Address: 416 FM511
Legal Description: Lot ____ Block ____ Subdivision ____
Construction Type: ☐ New Construction ☒ Addition

POWER REQUIREMENTS (Connecting Loads)

Voltage: ☐ 120/240 1-Phase ☐ 120/240 3-Phase ☐ 240/480 1-Phase ☐ 240/480 3-Phase ☐ 120/208 3-Phase ☒ 277/480 3-Phase ☐ 7200/12470 3-Phase
Current: ☐ 100 AMP ☐ 200 AMP ☐ 400 AMP ☒ 1,600 AMP *
* Services above 400 AMP will require current transformers (CT).

Load:	1-Phase	3-Phase
Lighting	6.0 KW	____ KW
Receptacles	36.0 KW	____ KW
HVAC	____ KW	309.6 KW
Motors/Machines	5.1 HP	34.3 HP
Others	____ KW	138.9 KW

Total Estimated KW Demand 490.5

TEMPORARY POWER NEEDED Month____ Day____ Year____
PERMANENT POWER NEEDED Month____ Day____ Year____

IMPORTANT TELEPHONE NUMBERS
BPUB Electrical Engineering..... (956) 983-6201
BPUB Customer Service..... (956) 983-6121

NOTES:
1. Aluminum meter sockets required (Effective 7/1/07)

IMPORTANT: If BPUB requests additional information or a response, the customer must comply within **20 business days**. Failure to respond or submit the requested information will result in the request being closed and requiring resubmittal.
Email to BPUB Electrical Engineering Department to nvasquez@brownsville-pub.com

BROWNSVILLE PUBLIC UTILITIES BOARD

CUSTOMER CHECKLIST

DEVELOPED BY:	ELECTRICAL ENGINEERING
APPROVED:	03/13/2026
DRAWING NUMBER	ENG-1

KEYED NOTES:

1. PROVIDE NEW ELECTRIC UTILITY PAD MOUNT TRANSFORMER CONCRETE PAD – SEE DETAIL.
2. PROVIDE NEW FEEDER.
3. PROVIDE NEW ELECTRIC UTILITY SERVICE METER 277/480V, 3ø, 4W.
4. SEE GROUNDING RISER DIAGRAM – TYPICAL.
5. PROVIDE NEW PANELBOARD. RECONNECT EXISTING BRANCH CIRCUITS AND CONNECT NEW BRANCH CIRCUITS.
6. PROVIDE 100KA, 277/480V, 3ø, 4W, SPD SQUARE "D" MODEL NO. HWA41.
7. EXISTING PANELBOARD TO REMAIN AS IS.
8. EXISTING LIGHTING CONTACTOR TO REMAIN AS IS.
9. EXISTING TIME CLOCK TO REMAIN AS IS.
10. PROVIDE NEW PANELBOARD.
11. EXISTING ELECTRIC UTILITY 3ø OVERHEAD SERVICE LINES.
12. EXISTING ELECTRIC UTILITY POWER POLE.
13. PROPOSED NEW ELECTRIC UTILITY 3ø OVERHEAD SERVICE LINES.
14. PROPOSED NEW ELECTRIC UTILITY POWER POLE WITH RISER DIP POLE.
15. PROVIDE (2) 4" NEW UNDERGROUND PRIMARY ELECTRIC CONDUITS WITH PULLWIRE. CONDUCTORS PROVIDED BY ELECTRICAL UTILITY COMPANY.
16. PROVIDE CONTINUOUS DETECTABLE UNDERGROUND WARNING TAPE.
17. PROVIDE 2" RACEWAY.
18. PROVIDE 4" HOUSEKEEPING CONCRETE PAD – TYPICAL.
19. PROVIDE SWITCHBOARD HOUSEKEEPING CONCRETE PAD. SEE STRUCTURAL DRAWINGS.
20. PROVIDE 4–4" RACEWAYS WITH PULLWIRE FOR FUTURE USE.
21. PROVIDE (2) #6 BARE COPPER GROUNDING ELECTRODE CONDUCTOR AND 3/4" X 10 COPPER CLAD GROUND ROD.
22. ADD1 OMIT IF ALTERNATE #1 IS ACCEPTED.

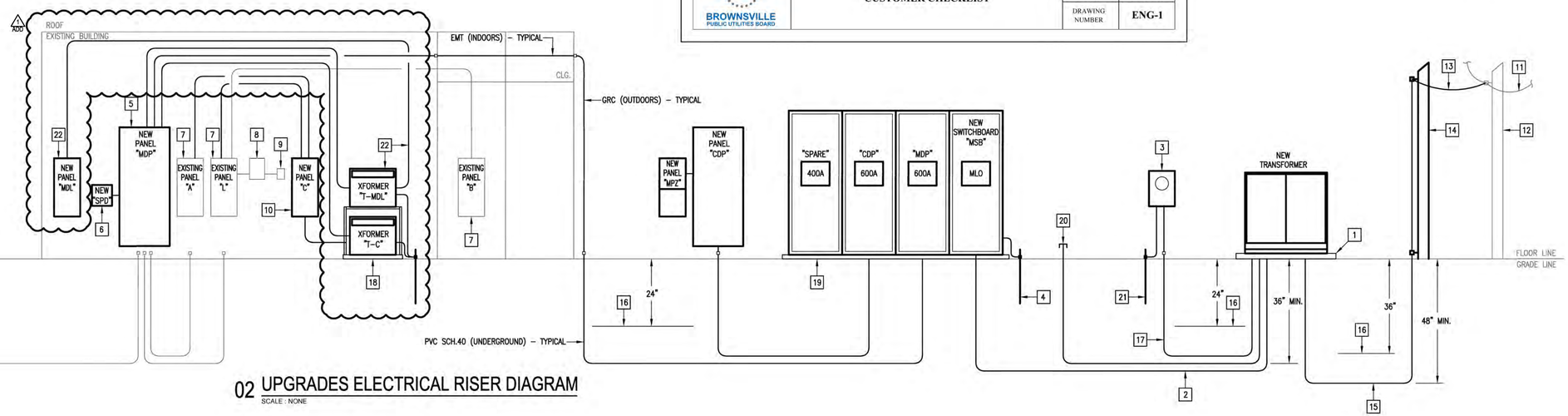

02 UPGRADES ELECTRICAL RISER DIAGRAM

SCALE : NONE

NO: REVISION: BY:
ADD1 04/17/2026 ETHOS

COPY NO:

STATE OF TEXAS
CESAR A. GONZALEZ
108611
LICENSED
PROFESSIONAL ENGINEER
03.23.2026

HVAC UPGRADES AT BROWNSVILLE ANIMAL REGULATION AND CARE FACILITY

OLMITO, TEXAS

F.M. 511

1126 SOUTH COMMERCE ST.
HARLINGEN, TX
PHONE: 956-230-3435
TEXAS REGISTERED ENGINEERING FIRM F-15598

DATE: MARCH 23. 2026
CHECKED BY: C.A.G.
DRAWN BY: C.G.
PROJECT NO.: 24v67
CAD FILE: -
SHEET: E4.1

EQUIPMENT CONNECTION SCHEDULE:

DESIGN	HP/KW	FLA	MCA	MOCP	VOLTAGE	DISCONNECT	60/75° COPPER BRANCH CIRCUIT
CH-1	–	–	207	250	480V/3PHASE	400A, 3PNF, 600V, NEMA 4X SS	2.5" – 3#250KCMIL & #4G
CH-2	–	–	207	250	480V/3PHASE	400A, 3PNF, 600V, NEMA 4X SS	2.5" – 3#250KCMIL & #4G
SCHWP-1	7.5 HP	11	13.7	30	480V/3PHASE	1) VARIABLE FREQUENCY DRIVE	3/4" – 3#10 & #10G
SCHWP-2	7.5 HP	11	13.7	30	480V/3PHASE	1) VARIABLE FREQUENCY DRIVE	3/4" – 3#10 & #10G
DOAS-1 (MOTOR)	2 X 2.3 HP	2 X 2.8	6.3	15	480V/3PHASE	30A, 3PNF, 600V, NEMA 4X SS	3/4" – 3#12 & #12G
DOAS-1 (HEAT)	65 KW	78.1	–	100	480V/3PHASE	100A, 3PNF, 600V, NEMA 4X SS	1.25" – 3#1 & #8G
DOAS-2 (MOTOR)	2.3 HP	2.8	3.5	15	480V/3PHASE	30A, 3PNF, 600V, NEMA 4X SS	3/4" – 3#12 & #12G
DOAS-2 (HEAT)	25 KW	30	–	40	480V/3PHASE	60A, 3PNF, 600V, NEMA 4X SS	3/4" – 3#8 & #10G
DOAS-3 (MOTOR)	2.3 HP	2.8	3.5	15	480V/3PHASE	30A, 3PNF, 600V, NEMA 4X SS	3/4" – 3#12 & #12G
DOAS-3 (HEAT)	30 KW	36	–	50	480V/3PHASE	60A, 3PNF, 600V, NEMA 4X SS	3/4" – 3#6 & #10G
DOAS-4 (MOTOR)	2.3 HP	2.8	3.5	15	480V/3PHASE	30A, 3PNF, 600V, NEMA 4X SS	3/4" – 3#12 & #12G
DOAS-4 (HEAT)	25 KW	30	–	40	480V/3PHASE	60A, 3PNF, 600V, NEMA 4X SS	3/4" – 3#8 & #10G
DOAS-5 (MOTOR)	2.3 HP	2.8	3.5	15	480V/3PHASE	30A, 3PNF, 600V, NEMA 4X SS	3/4" – 3#12 & #12G
DOAS-5 (HEAT)	35 KW	42	–	60	480V/3PHASE	60A, 3PNF, 600V, NEMA 4X SS	1" – 3#4 & #10G
RTU-1 (MOTOR)	3.27 HP	3.9	4.9	15	480V/3PHASE	30A, 3PNF, 600V, NEMA 4X SS	3/4" – 3#12 & #12G
RTU-1 (HEAT)	30 KW	36	–	50	480V/3PHASE	60A, 3PNF, 600V, NEMA 4X SS	3/4" – 3#6 & #10G
RTU-2 (MOTOR)	2.3 HP	2.8	3.5	15	480V/3PHASE	30A, 3PNF, 600V, NEMA 4X SS	3/4" – 3#12 & #12G
RTU-2 (HEAT)	25 KW	30	–	40	480V/3PHASE	60A, 3PNF, 600V, NEMA 4X SS	3/4" – 3#8 & #10G
RTU-1	22.5 KW	30	–	80	480V/3PHASE	RETAIN EXISTING	2) 1" – 3#4 & #8G
RTU-2	22.5 KW	30	–	80	480V/3PHASE	RETAIN EXISTING	2) 1" – 3#4 & #8G
EX-RTU-ADDITION	22.5 KW	30	–	80	480V/3PHASE	RETAIN EXISTING	2) 1.25" – 3#3 & #8G

ALTERNATE #1 — DOAS-1 (MOTOR), DOAS-1 (HEAT), DOAS-2 (MOTOR), DOAS-2 (HEAT), DOAS-3 (MOTOR), DOAS-3 (HEAT), DOAS-4 (MOTOR), DOAS-4 (HEAT), DOAS-5 (MOTOR), DOAS-5 (HEAT)

ALTERNATE #1 — RTU-1 (MOTOR), RTU-1 (HEAT), RTU-2 (MOTOR), RTU-2 (HEAT)

ADD

NOTES:
1) PROVIDED BY DIV. 23. INSTALLED AND CONNECTED BY DIV. 26.
2) INTERCEPT EXISTING BRANCH CIRCUIT AND EXTEND TO NEW PANELBOARD "MDL". OMIT IF ALTERNATE #1 IS ACCEPTED.

EXHAUST FAN CONNECTION SCHEDULE:

DESIGN	HP	MCA	MOCP	VOLTAGE	DISCONNECT	CONNECTION	60° COPPER BRANCH CIRCUIT	POWER SOURCE (PANEL)
EF-1	1 HP	16.0	40	120V/1PHASE	INTEGRAL DISCONNECT	CONNECT AT ROOF. INTERLOCKING BY HVAC CONTROLS CONTRACTOR.	3/4" – 2#8 & #10G	C
EF-2	1 HP	16.0	40	120V/1PHASE	INTEGRAL DISCONNECT	CONNECT AT ROOF. INTERLOCKING BY HVAC CONTROLS CONTRACTOR.	3/4" – 2#8 & #10G	C
EF-3	5/8 HP	7.2	25	120V/1PHASE	INTEGRAL DISCONNECT	CONNECT AT ROOF. INTERLOCKING BY HVAC CONTROLS CONTRACTOR.	3/4" – 2#8 & #10G	C
EF-4	1/6 HP	4.4	20	120V/1PHASE	INTEGRAL DISCONNECT	CONNECT AT ROOF. INTERLOCK SWITCHING W/LIGHTING OCCUPANCY SENSOR. INTERLOCKING BY HVAC CONTROLS CONTRACTOR.	1) 1/2" – 2#12 & #12G	A
EF-5	1/6 HP	4.4	20	120V/1PHASE	INTEGRAL DISCONNECT	CONNECT AT ROOF. INTERLOCK SWITCHING W/LIGHTING OCCUPANCY SENSOR. INTERLOCKING BY HVAC CONTROLS CONTRACTOR.	1) 1/2" – 2#12 & #12G	A
EF-6	1/6 HP	4.4	20	120V/1PHASE	INTEGRAL DISCONNECT	CONNECT AT ROOF. INTERLOCK SWITCHING W/LIGHTING OCCUPANCY SENSOR. INTERLOCKING BY HVAC CONTROLS CONTRACTOR.	1) 1/2" – 2#12 & #12G	A
EF-7	1/2 HP	9.8	25	120V/1PHASE	INTEGRAL DISCONNECT	CONNECT AT ROOF. INTERLOCKING BY HVAC CONTROLS CONTRACTOR.	3/4" – 2#10 & #10G	C
EF-8	3/4 HP	13.8	35	120V/1PHASE	INTEGRAL DISCONNECT	CONNECT AT ROOF. INTERLOCKING BY HVAC CONTROLS CONTRACTOR.	3/4" – 2#8 & #10G	C
EF-9	3/4 HP	13.8	35	120V/1PHASE	INTEGRAL DISCONNECT	CONNECT AT ROOF. INTERLOCKING BY HVAC CONTROLS CONTRACTOR.	3/4" – 2#8 & #10G	C

NOTES:
1) RETAIN AND REUSE EXISTING. IF EXISTING BRANCH CIRCUIT DOES NOT REACH NEW POINT OF CONNECTION PROVIDE A J-BOX TO SPLICE AND EXTEND.

TRANSFORMER SCHEDULE:

DESIGN	KVA	PV	SV	DEGREE RISE	CONNECTION	FREQ HZ	SERVES PANELS	CAT. NO.	PRIMARY FEEDER (75°C COPPER)	NOTES
T-C	112.5	480	120/208	115	DELTA Y	60	C	SQUARE "D": EXN112T3155H	2" – 3#3/0 & #6G	1
T-MDL	112.5	480	120/208	115	DELTA Y	60	MDL	SQUARE "D": EXN112T3155H	2" – 3#3/0 & #6G	1,2

ADD

NOTES:
1) PROVIDE A WEATHER SHIELD.
2) IF ALTERNATE #1 IS ACCEPTED OMIT TRANSFORMER.

MDP

ROOM OUTDOORS — VOLTS 480Y/277V 3P 4W — AIC 35,000
MOUNTING SURFACE — BUS AMPS 600 — MAIN BKR 600
FED FROM MSB — NEUTRAL 100% — LUGS STANDARD
NOTE PROVIDE A TYPE WRITTEN AS BUILT DIRECTORY THAT INCLUDES ROOM NUMBERS.

CKT #	CKT BKR	CIRCUIT DESCRIPTION	LOAD KVA A	LOAD KVA B	LOAD KVA C	CKT #	CKT BKR	CIRCUIT DESCRIPTION	LOAD KVA A	LOAD KVA B	LOAD KVA C
1	15/3	DOAS-1	1.08			2	100/3	DOAS-1 HEAT	21.7		
3	|			1.08		4	|			21.7	
5	|				1.08	6	|				21.7
7	15/3	DOAS-2	1.06			8	40/3	DOAS-2 HEAT	8.33		
9	|			1.06		10	|			8.33	
11	|				1.06	12	|				8.33
13	15/3	DOAS-3	1.06			14	50/3	DOAS-3 HEAT	10		
15	|			1.06		16	|			10	
17	|				1.06	18	|				10
19	15/3	DOAS-4	1.06			20	40/3	DOAS-4 HEAT	8.33		
21	|			1.06		22	|			8.33	
23	|				1.06	24	|				8.33
25	15/3	DOAS-5	1.06			26	60/3	DOAS-5 HEAT	11.7		
27	|			1.06		28	|			11.7	
29	|				1.06	30	|				11.7
31	15/3	RTU-1	1.06			32	50/3	RTU-1 HEAT	10		
33	|			1.06		34	|			10	
35	|				1.06	36	|				10
37	15/3	RTU-2	1.06			38	40/3	RTU-2 HEAT	8.33		
39	|			1.06		40	|			8.33	
41	|				1.06	42	|				8.33
43	200/3	*XFMR T-C	39.2			44	200/3	*XFMR T-MDL ADD	0		
45	|			38.4		46	|			0	
47	|				38.4	48	|				0
49	20/1	SPACE	0			50	20/1	SPACE	0		
51	20/1	SPACE		0		52	20/1	SPACE		0	
53	20/1	SPACE			0	54	20/1	SPACE			0
								TOTAL CONNECTED KVA BY PHASE	125	124	124

	CONN KVA	CALC KVA			CONN KVA	CALC KVA	
LARGEST MOTOR	3.17	0.793	(25%)	CONTINUOUS	1.34	1.68	(125%)
MOTORS	32.5	32.5	(100%)	HEATING	235	235	(100%)
				DIVERSE	104	104	(100%)
				TOTAL LOAD		374	
				BALANCED 3-PHASE LOAD		450 A	

1. PROVIDE A NEMA 4X SS OUTDOOR ENCLOSURE.

*PROVIDE ELECTRONIC TYPE WITH L.S.I. DIALS.

CDP

ROOM CENTRAL PLANT — VOLTS 480Y/277V 3P 4W — AIC 35,000
MOUNTING SURFACE — BUS AMPS 600 — MAIN BKR 600
FED FROM MSB — NEUTRAL 100% — LUGS STANDARD
NOTE PROVIDE PHENOLIC CIRCUIT BREAKER IDENTIFICATION NAMETAGS PER SPECIFICATIONS.

CKT #	CKT BKR	CIRCUIT DESCRIPTION	LOAD KVA A	LOAD KVA B	LOAD KVA C	CKT #	CKT BKR	CIRCUIT DESCRIPTION	LOAD KVA A	LOAD KVA B	LOAD KVA C
1	30/3	(7.5HP) SCHWP-1	3.05			2	30/3	(7.5HP) SCHWP-2	3.05		
3	|			3.05		4	|			3.05	
5	|				3.05	6	|				3.05
7	20/3	SPACE	0			8	20/3	SPACE	0		
9	|			0		10	|			0	
11	|				0	12	|				0
13	250/3	CH-1	40			14	250/3	CH-2	40		
15	|			40		16	|			40	
17	|				40	18	|				40
19	20/3	SPACE	0			20	30/2	*PANEL MPZ	0.425		
21	|			0		22	|			0.36	
23	|				0	24	20/1	SPACE			0
								TOTAL CONNECTED KVA BY PHASE	86.5	86.5	86.1

	CONN KVA	CALC KVA			CONN KVA	CALC KVA	
LIGHTING	0.395	0.494	(125%)	RECEPTACLES	0.36	0.36	(50%>10)
LARGEST MOTOR	120	30	(25%)	CONTINUOUS	0.03	0.038	(125%)
MOTORS	18.3	18.3	(100%)	COOLING	240	240	(100%)
				TOTAL LOAD		289	
				BALANCED 3-PHASE LOAD		348 A	

1. PROVIDE A NEMA 4X SS OUTDOOR ENCLOSURE.

*PROVIDE ELECTRONIC TYPE WITH L.S.I. DIALS.

MDL

ROOM OUTDOORS — VOLTS 208Y/120V 3P 4W — AIC 10,000
MOUNTING SURFACE — BUS AMPS 400 — MAIN BKR 300
FED FROM T-MDL — NEUTRAL 100% — LUGS STANDARD
NOTE PROVIDE A TYPE WRITTEN AS BUILT DIRECTORY.

CKT #	CKT BKR	CIRCUIT DESCRIPTION	LOAD KVA A	LOAD KVA B	LOAD KVA C	CKT #	CKT BKR	CIRCUIT DESCRIPTION	LOAD KVA A	LOAD KVA B	LOAD KVA C
1	80/3	RTU-1	8.44			2	80/3	RTU-2	8.44		
3	|			8.44		4	|			8.44	
5	|				8.44	6	|				8.44
7	20/1	SPACE	0			8	100/3	EX-RTU-ADMIN	8.83		
9	20/1	SPACE		0		10	|			8.83	
11	20/1	SPACE			0	12	|				8.83
13	20/1	SPACE	0			14	20/1	SPACE	0		
15	20/1	SPACE		0		16	20/1	SPACE		0	
17	20/1	SPACE			0	18	20/1	SPACE			0
								TOTAL CONNECTED KVA BY PHASE	25.7	25.7	25.7

	CONN KVA	CALC KVA			CALC KVA
LARGEST MOTOR	3.99	0.998	(25%)	TOTAL LOAD	78.1
HEATING	77.1	77.1	(100%)	BALANCED 3-PHASE LOAD	217 A
COOLING	9.64	0	(0%)		

1. PROVIDE A NEMA 4X SS OUTDOOR ENCLOSURE.
2. IF ALTERNATE #1 IS ACCEPTED OMIT PANELBOARD.

ADD

MPZ

ROOM CENTRAL PLANT — VOLTS 240/120V 2P 3W — AIC 18,000
MOUNTING SURFACE — BUS AMPS 100 — MAIN BKR 40
FED FROM T-MPZ — NEUTRAL 100% — LUGS STANDARD
NOTE PROVIDE A TYPE WRITTEN AS BUILT DIRECTORY.

CKT #	CKT BKR	CIRCUIT DESCRIPTION	LOAD KVA A	LOAD KVA B	CKT #	CKT BKR	CIRCUIT DESCRIPTION	LOAD KVA A	LOAD KVA B
1	20/1	LIGHTING	0.395		2	20/1	SPARE	0	
3	20/1	RECEPT.		0.36	4	20/1	SPARE		0
5	20/1	DDC	0.03		6	20/1	SPARE	0	
7	20/1	SPARE		0	8	20/1	SPARE		0
							TOTAL CONNECTED KVA BY PHASE	0.425	0.36

	CONN KVA	CALC KVA			CONN KVA	CALC KVA	
LIGHTING	0.395	0.494	(125%)	RECEPTACLES	0.36	0.36	(50%>10)
				CONTINUOUS	0.03	0.038	(125%)
				TOTAL LOAD		0.891	
				BALANCED LOAD		3.71 A	

1. PROVIDE N3R ENCLOSURE.
2. PROVIDE PACKAGED POWER SUPPLY WITH INTEGRAL 7.5KVA TRANSFORMER, 30A/2P 480V PRIMARY MCB, AND 40A/2P 240V SECONDARY MCB.

C

ROOM OUTDOORS — VOLTS 208Y/120V 3P 4W — AIC 10,000
MOUNTING SURFACE — BUS AMPS 400 — MAIN BKR 400
FED FROM T-C — NEUTRAL 100% — LUGS STANDARD
NOTE PROVIDE A TYPE WRITTEN AS BUILT DIRECTORY THAT INCLUDES ROOM NUMBERS.

CKT #	CKT BKR	CIRCUIT DESCRIPTION	LOAD KVA A	LOAD KVA B	LOAD KVA C	CKT #	CKT BKR	CIRCUIT DESCRIPTION	LOAD KVA A	LOAD KVA B	LOAD KVA C
1	40/1	EF-1	1.92			2	25/1	EF-7	1.18		
3	40/1	EF-2		1.92		4	35/1	EF-8		1.66	
5	25/1	EF-3			1.92	6	35/1	EF-9			1.66
7	50/3	EXISTING PRESSURE WASHER	4.8			8	20/1	DDC PANELS	1.34		
9	|			4.8		10	20/1	SPACE		0	
11	|				4.8	12	20/1	SPACE			0
13	225/3	EXISTING PANEL A	10			14	20/1	SPACE	0		
15	|			10		16	20/1	SPACE		0	
17	|				10	18	20/1	SPACE			0
19	150/3	EXISTING CONTAINER	10			20	150/3	EXISTING PANEL L	10		
21	|			10		22	|			10	
23	|				10	24	|				10
								TOTAL CONNECTED KVA BY PHASE	39.2	38.4	38.4

	CONN KVA	CALC KVA			CONN KVA	CALC KVA	
LARGEST MOTOR	1.92	0.48	(25%)	CONTINUOUS	1.34	1.68	(125%)
MOTORS	10.2	10.2	(100%)	DIVERSE	104	104	(100%)
				TOTAL LOAD		117	
				BALANCED 3-PHASE LOAD		324 A	

1. PROVIDE A NEMA 4X SS OUTDOOR ENCLOSURE.

NO:	REVISION:	BY:
1 ADD	04/17/2026	ETHOS

COPY NO:

STATE OF TEXAS
CESAR A. GONZALEZ
108611
LICENSED
PROFESSIONAL ENGINEER
03.23.2026

HVAC UPGRADES AT BROWNSVILLE ANIMAL REGULATION AND CARE FACILITY

OLMITO, TEXAS

F.M. 511

ethos engineering
1126 SOUTH COMMERCE ST.
HARLINGEN, TX
PHONE: 956-230-3435
TEXAS REGISTERED ENGINEERING FIRM F-15998

DATE:	MARCH 23. 2026
CHECKED BY:	C.A.G.
DRAWN BY:	C.G.
PROJECT NO.:	24v67
CAD FILE:	-
SHEET:	E5.1

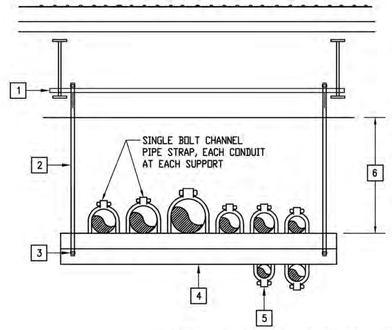

KEYED NOTES:

1. PROVIDE UNISTRUT STRUCTURAL CHANNEL SECURED TO TO JOIST AT BOTH ENDS.
2. PROVIDE 1/2" GALVANIZED ROD MINIMUM.
3. PROVIDE LOCKNUT.
4. PROVIDE GALVANIZED UNISTRUT 8'-0" O/C MAXIMUM.
5. 0'-1" MAXIMUM SIZE ON BOTTOM OF UNISTRUT.
6. VARIES.

04 HORIZONTAL RACEWAYS SUPPORT DETAIL

SCALE : NOT TO SCALE

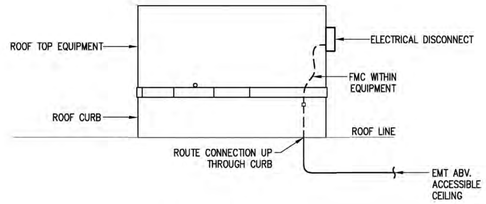

01 ROOF TOP UNIT CONNECTION DETAIL

SCALE : NOT TO SCALE

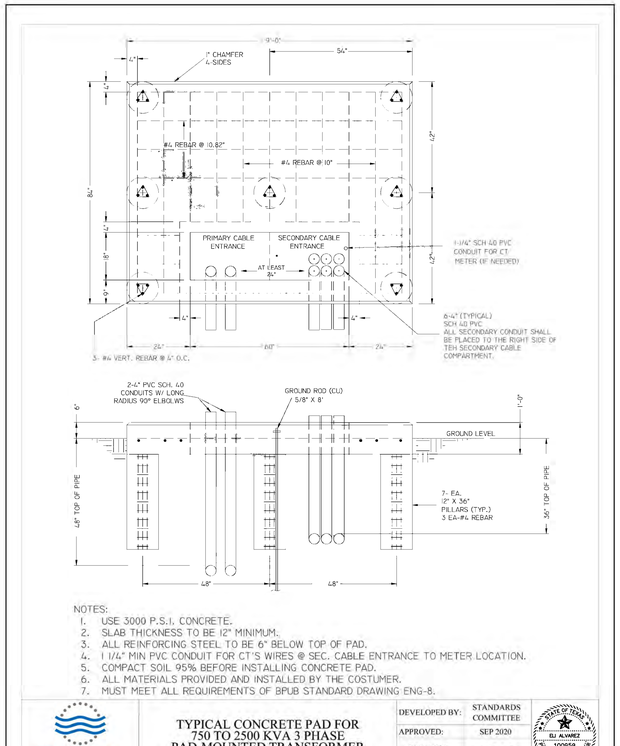

NOTES:
1. USE 3000 P.S.I. CONCRETE.
2. SLAB THICKNESS TO BE 12" MINIMUM.
3. ALL REINFORCING STEEL TO BE 6" BELOW TOP OF PAD.
4. 1 1/4" MIN PVC CONDUIT FOR CT'S WIRES @ SEC. CABLE ENTRANCE TO METER LOCATION.
5. COMPACT SOIL 95% BEFORE INSTALLING CONCRETE PAD.
6. ALL MATERIALS PROVIDED AND INSTALLED BY THE COSTUMER.
7. MUST MEET ALL REQUIREMENTS OF BPUB STANDARD DRAWING ENG-8.

BROWNSVILLE PUBLIC UTILITIES BOARD

TYPICAL CONCRETE PAD FOR 750 TO 2500 KVA 3 PHASE PAD-MOUNTED TRANSFORMER

DEVELOPED BY:	STANDARDS COMMITTEE
APPROVED:	SEP 2020
DRAWING NUMBER	UD-17

ELI ALVAREZ — 100659 — LICENSED PROFESSIONAL ENGINEER — STATE OF TEXAS

06 BPUB TRANSFORMER CONCRETE PAD DETAIL

SCALE : NOT TO SCALE

KEYED NOTES:

1. PROVIDE DISCONNECT SECURED TO HORIZONTAL UNISTRUT SUPPORTS.
2. PROVIDE SUPPORT BRACE.
3. PROVIDE UNISTRUT SUPPORT. PAINT CUT ENDS WITH COLD GALVANIZED COMPOUND.
4. PROVIDE UV STABLE POLYCARBONATE BASE. ANCHOR TO NEW CURBS.

GENERAL NOTE:
PROVIDE ALL HARDWARE AND SUPPORTS HOT-DIPPED GALVANIZED STEEL.

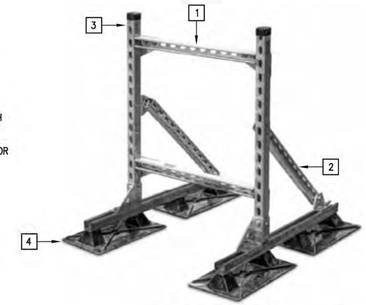

02 ROOF DISCONNECT SUPPORT DETAIL

SCALE : NOT TO SCALE

ENGRAVED BLACK LETTERING → PANEL "XXX"
MECHANICAL FASTENERS → FED FROM PANEL X
LAMINATED ACRYLIC OR MELAMINE PLASTIC → CKT : XX

NOTE: ATTACH NAMEPLATES TO ALL ELECTRICAL GEAR AS NOTED IN SECTION 260553.

05 EQUIPMENT IDENTIFICATION LABEL DETAIL

SCALE : NOT TO SCALE

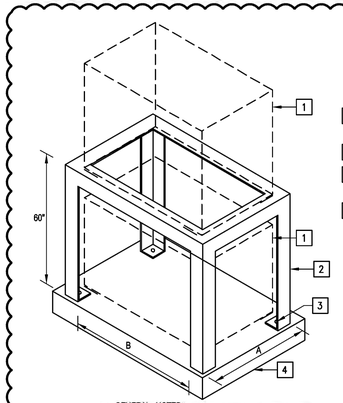

KEYED NOTES:

1. PROVIDE TRANSFORMER AS SCHEDULED.
2. 3"X3"X1/4" ANGLE FRAME.
3. PROVIDE ISOLATION PADS EACH CORNER (8).
4. PROVIDE 4" CONCRETE HOUSE KEEPING PAD.

GENERAL NOTES:
1) SIZE A & B PER TRANSFORMERS SUPPLIED.
2) IF ALTERNATE #1 IS ACCEPTED OMIT PLATFORM.

07 TRANSFORMER PLATFORM DETAIL

SCALE : NOT TO SCALE

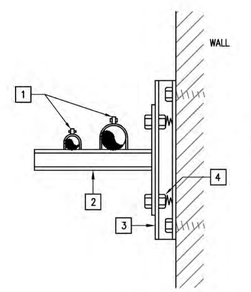

KEYED NOTES:

1. PROVIDE CONDUIT CLAMPS.
2. PROVIDE GALVANIZED UNISTRUT WALL BRACKET.
3. PROVIDE RAMSET OR BOLT GALVANIZED UNISTRUT TO WALL.
4. PROVIDE SELF HOLDING CLAMPING NUT WITH SPRING.

03 RACEWAY RUNS SUPPORT DETAIL

SCALE : NOT TO SCALE

NO:	REVISION:	BY:
ADD 1	04/17/2026	ETHOS

COPY NO:

STATE OF TEXAS — CESAR A. GONZALEZ — 108611 — LICENSED PROFESSIONAL ENGINEER — 03.23.2026

HVAC UPGRADES AT BROWNSVILLE ANIMAL REGULATION AND CARE FACILITY

OLMITO, TEXAS

F.M. 511

ethos engineering
1126 SOUTH COMMERCE ST.
HARLINGEN, TX
PHONE: 956-230-3435
TEXAS REGISTERED ENGINEERING FIRM
F-15598

DATE:	MARCH 23. 2026
CHECKED BY:	C.A.G.
DRAWN BY:	C.G.
PROJECT NO.:	24v67
CAD FILE:	-
SHEET:	E6.1

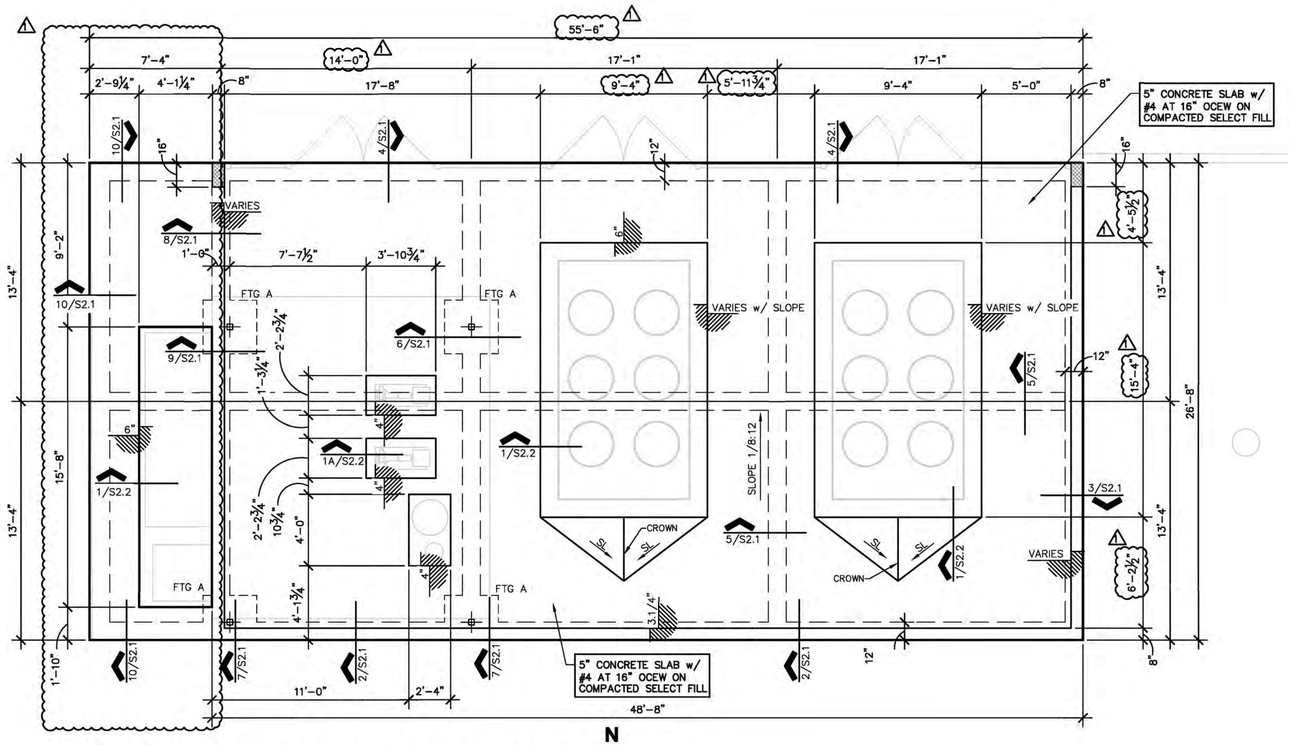

N

PLAN NORTH

1 CHILLER YARD FOUNDATION PLAN

1/4" = 1'-0"

NOTES:

1. REFERENCE ROOF FRAMING PLAN FOR COLUMN AND BASEPLATE LOCATIONS. FOUNDATION PLAN DIMENSIONS GENERALLY DENOTE GRADE BEAM CENTERLINE.
2. COORDINATE LOCATION AND ORIENTATION OF CHILLER YARD FOUNDATION WITH M.E.P.
3. ALL CONDUITS GREATER THAN 1.1/2" IN DIAMETER SHALL BE RECESSED TO PROVIDE 1.1/2" CLEAR DISTANCE BETWEEN SLAB REBAR AND CONDUIT.
4. MAINTAIN 2" MINIMUM CLEAR DISTANCE BETWEEN ALL CONDUIT IN SLAB.
5. A SINGLE CONDUIT (MAX 3" O.D.) MAY BE PLACED WITHIN THE BEAM CAGE. ALL CONDUIT IN BEAM CAGES TO BE TIED TO STIRRUPS MINIMUM OF 4" FROM HORIZONTAL BARS.
6. ▨ INDICATES 8" CMU WALLS WITH #5 VERTICAL BARS AT 8" o/c.
6. PLUMBING LINES, CHILLED WATER LINES, & CONDUIT SHALL NOT BE PLACED IN BOTTOM OF GRADE BEAM TRENCHES.
7. PLUMBING LINES, CHILLED WATER LINES, & CONDUIT PASSING THROUGH GRADE BEAMS SHALL BE SLEEVED. BEAMS SHALL BE DEEPENED AND BENT REBAR PROVIDED IF LOCATION OF DRAIN LINES REQUIRE CUTTING BOTTOM BARS. REFERENCE DETAIL 3/S2.2.
8. COORDINATE SIZE AND LOCATION OF HOUSEKEEPING PADS WITH M.E.P.

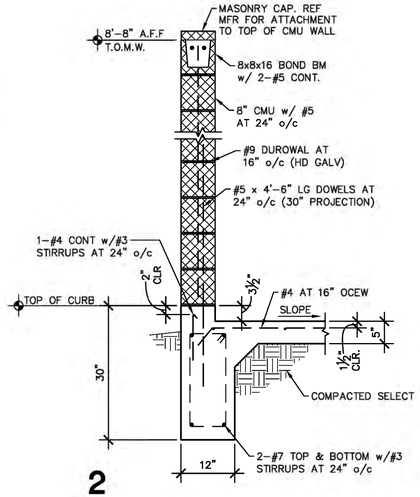

2

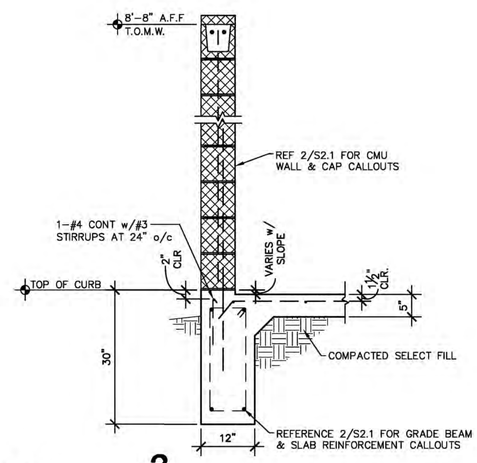

3

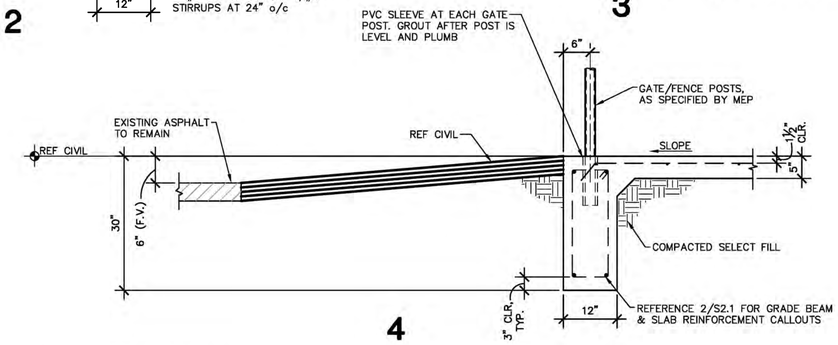

4

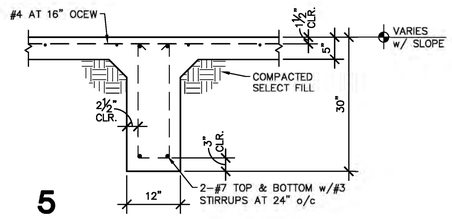

5

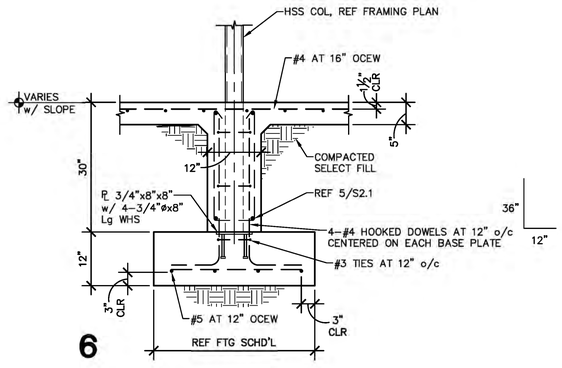

6

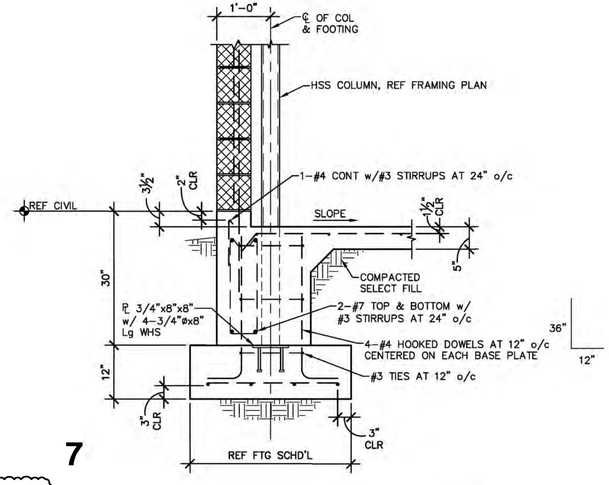

7

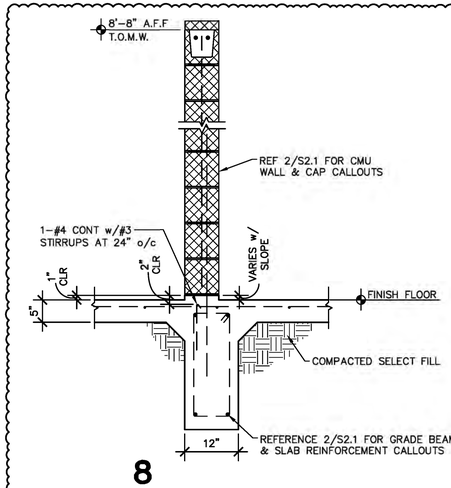

8

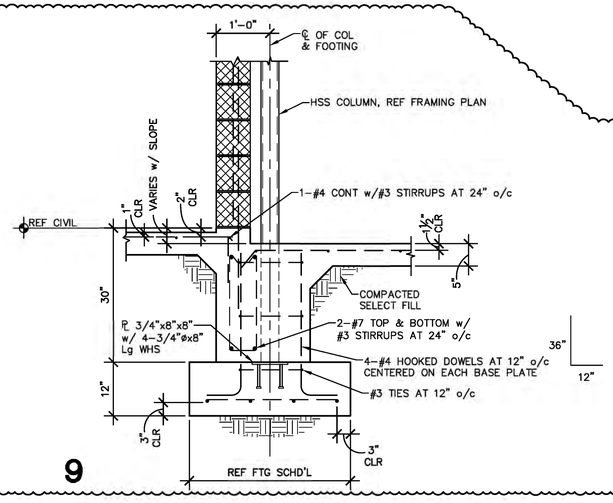

9

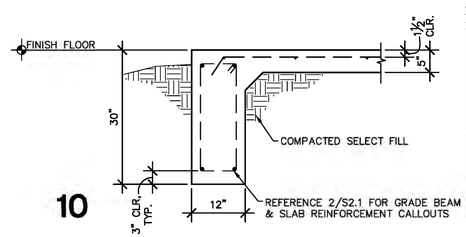

10

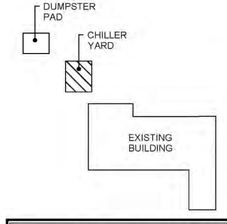

NO:	REVISION:	BY:
1	ADDENDUM #1	4/17/2026

COPY NO:

ROLANDO R. RUBIANO 86369 LICENSED PROFESSIONAL ENGINEER STATE OF TEXAS
4·17·2026

HVAC UPGRADES AT BROWNSVILLE ANIMAL REGULATION AND CARE FACILITY

OLMITO, TEXAS

F.M. 511

ethos engineering
1126 SOUTH COMMERCE ST.
HARLINGEN, TX.
PHONE: 956-230-3435
TEXAS REGISTERED ENGINEERING FIRM F-15998

DATE:	MARCH 23, 2026
CHECKED BY:	BD
DRAWN BY:	HR
PROJECT NO.:	1178-50
CAD FILE:	-
SHEET:	S2.1

GREEN, RUBIANO & ASSOCIATES
CONSULTING STRUCTURAL ENGINEERS
1220 WEST HARRISON
HARLINGEN, TEXAS 78501
(956)428-4481 EM: GRUBIANO@HOTMAIL.COM
FIRM REGISTRATION # F-4140

COPYRIGHT 2024 BY GREEN, RUBIANO & ASSOCIATES

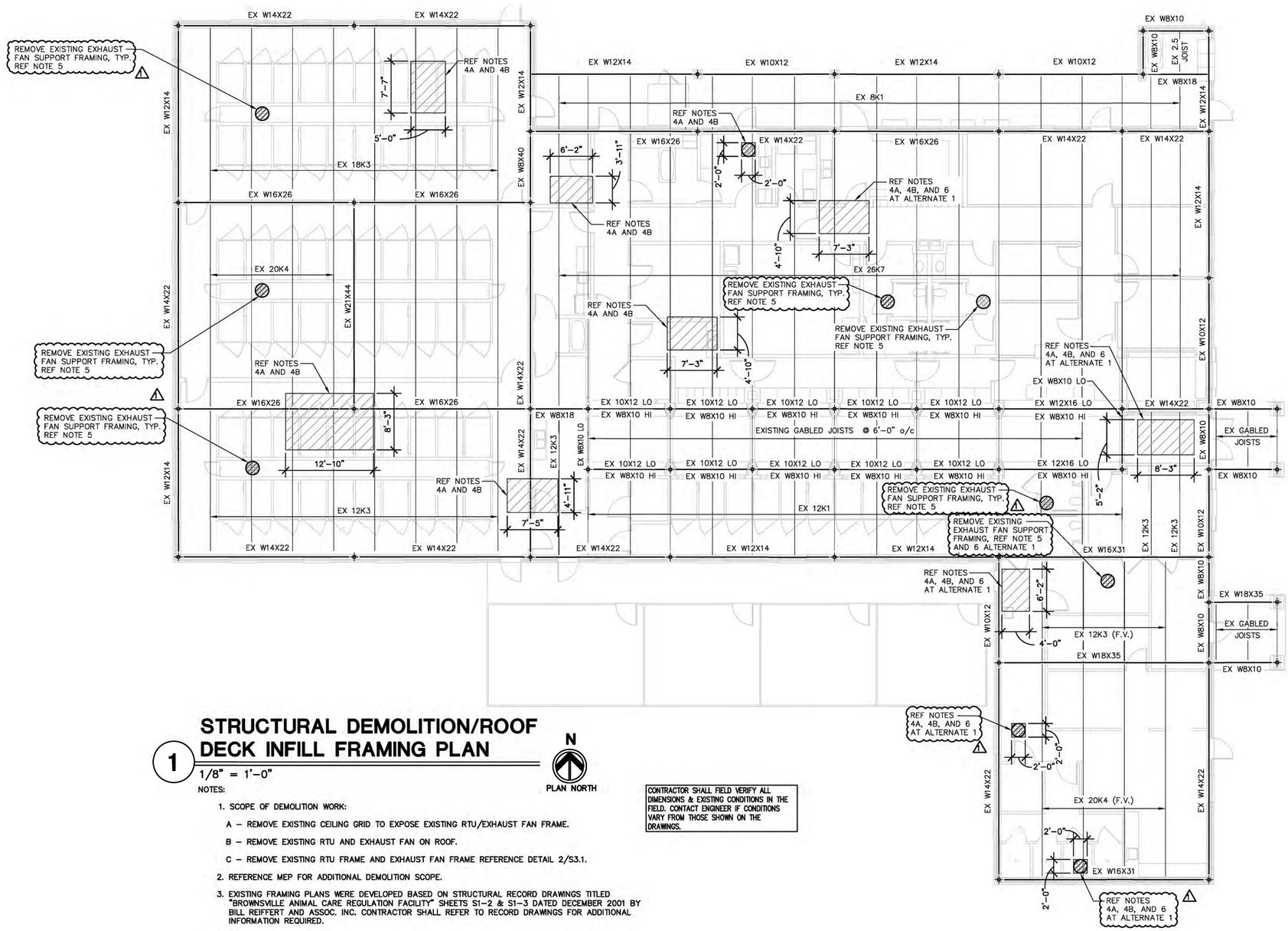

1 STRUCTURAL DEMOLITION/ROOF DECK INFILL FRAMING PLAN

1/8" = 1'-0"

N

PLAN NORTH

CONTRACTOR SHALL FIELD VERIFY ALL DIMENSIONS & EXISTING CONDITIONS IN THE FIELD. CONTACT ENGINEER IF CONDITIONS VARY FROM THOSE SHOWN ON THE DRAWINGS.

NOTES:

1. SCOPE OF DEMOLITION WORK:
   - A – REMOVE EXISTING CEILING GRID TO EXPOSE EXISTING RTU/EXHAUST FAN FRAME.
   - B – REMOVE EXISTING RTU AND EXHAUST FAN ON ROOF.
   - C – REMOVE EXISTING RTU FRAME AND EXHAUST FAN FRAME REFERENCE DETAIL 2/S3.1.
2. REFERENCE MEP FOR ADDITIONAL DEMOLITION SCOPE.
3. EXISTING FRAMING PLANS WERE DEVELOPED BASED ON STRUCTURAL RECORD DRAWINGS TITLED "BROWNSVILLE ANIMAL CARE REGULATION FACILITY" SHEETS S1-2 & S1-3 DATED DECEMBER 2001 BY BILL REIFFERT AND ASSOC. INC. CONTRACTOR SHALL REFER TO RECORD DRAWINGS FOR ADDITIONAL INFORMATION REQUIRED.
4. SCOPE OF REPAIR WORK:
   - A – INSTALL NEW ROOF DECK INFILL AT ALL LOCATIONS WHERE EXISTING RTU'S AND EXHAUST FAN OPENINGS HAVE BEEN REMOVED. REFERENCE DETAIL 3/S3.1 FOR ROOF DECK INFILL.
   - B – INSTALL NEW ROOFING INTEGRATED WITH EXISTING ROOFING AT ALL LOCATIONS WHERE EXISTING RTU'S AND EXHAUST FAN OPENINGS HAVE BEEN INFILLED w/ NEW DECK.
5. ⊗ INDICATES LOCAMATIONS WHERE EXISTING EXHAUST FAN AND SUPPORT FRAME WILL BE DEMOLISHED TO ALLOW FOR INSTALLATION OF NEW LARGER EXHAUST FAN AND NEW SUPPORT FRAME.
6. IF ALTERNATE 1 IS NOT ACCEPTED, THEN EXISTING MECHANICAL UNITS AND ROOFING WILL REMAIN AS IS.

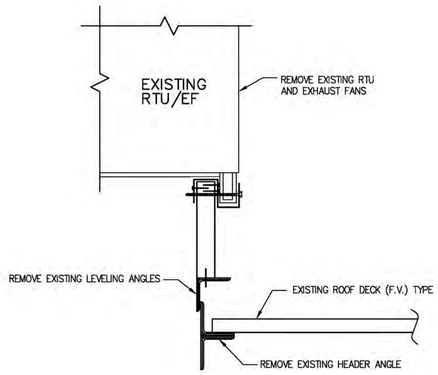

2 TYPICAL EXISTING RTU/EXHAUST FAN FRAME DEMOLITION DETAIL

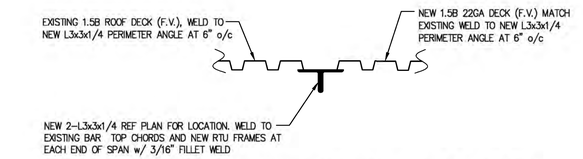

3 EXISTING TO NEW DECK TRANSITION DETAIL

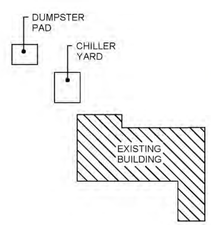

NO:	REVISION:	BY:
1	ADDENDUM #1	4/17/2026

COPY NO:

ROLANDO R. RUBIANO 86369 LICENSED PROFESSIONAL ENGINEER STATE OF TEXAS

4·17·2026

HVAC UPGRADES AT BROWNSVILLE ANIMAL REGULATION AND CARE FACILITY

OLMITO, TEXAS

F.M. 511

ethos engineering
1126 SOUTH COMMERCE ST.
HARLINGEN, TX
PHONE: 956-230-3435
TEXAS REGISTERED ENGINEERING FIRM F-15998

DATE:	MARCH 23, 2026
CHECKED BY:	BD
DRAWN BY:	HR
PROJECT NO.:	1178-50
CAD FILE:	-
SHEET:	S3.1

GREEN, RUBIANO & ASSOCIATES
CONSULTING STRUCTURAL ENGINEERS
1220 WEST HARRISON
HARLINGEN, TEXAS 78550
(956)428-4491 EM: GRABGRADENGINEERING.COM
FIRM REGISTRATION # F-4145

COPYRIGHT 2024 BY GREEN, RUBIANO & ASSOCIATES

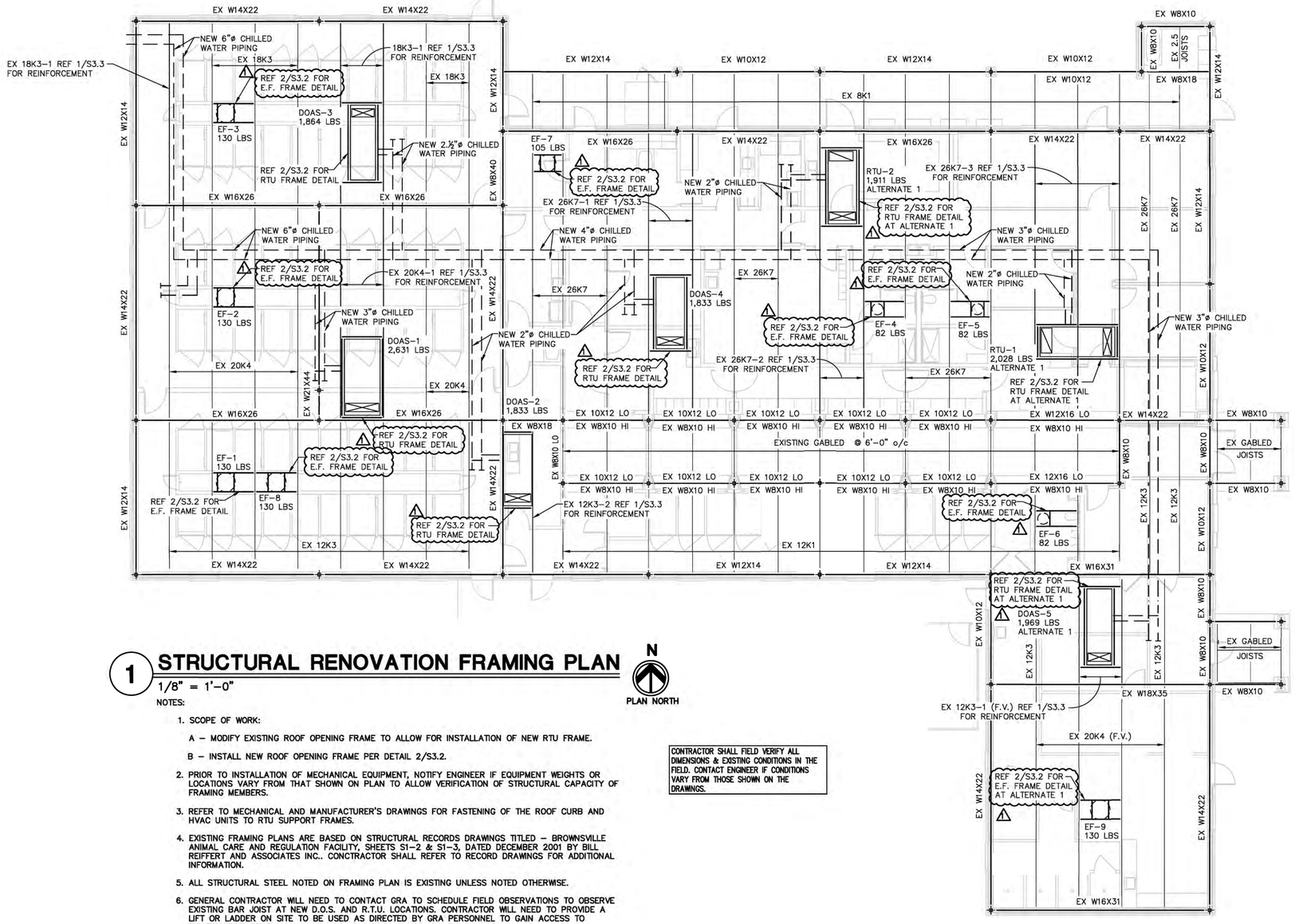

1 STRUCTURAL RENOVATION FRAMING PLAN

1/8" = 1'-0"

N

PLAN NORTH

NOTES:

1. SCOPE OF WORK:

   A – MODIFY EXISTING ROOF OPENING FRAME TO ALLOW FOR INSTALLATION OF NEW RTU FRAME.

   B – INSTALL NEW ROOF OPENING FRAME PER DETAIL 2/S3.2.

2. PRIOR TO INSTALLATION OF MECHANICAL EQUIPMENT, NOTIFY ENGINEER IF EQUIPMENT WEIGHTS OR LOCATIONS VARY FROM THAT SHOWN ON PLAN TO ALLOW VERIFICATION OF STRUCTURAL CAPACITY OF FRAMING MEMBERS.

3. REFER TO MECHANICAL AND MANUFACTURER'S DRAWINGS FOR FASTENING OF THE ROOF CURB AND HVAC UNITS TO RTU SUPPORT FRAMES.

4. EXISTING FRAMING PLANS ARE BASED ON STRUCTURAL RECORDS DRAWINGS TITLED – BROWNSVILLE ANIMAL CARE AND REGULATION FACILITY, SHEETS S1–2 & S1–3, DATED DECEMBER 2001 BY BILL REIFFERT AND ASSOCIATES INC.. CONCTRACTOR SHALL REFER TO RECORD DRAWINGS FOR ADDITIONAL INFORMATION.

5. ALL STRUCTURAL STEEL NOTED ON FRAMING PLAN IS EXISTING UNLESS NOTED OTHERWISE.

6. GENERAL CONTRACTOR WILL NEED TO CONTACT GRA TO SCHEDULE FIELD OBSERVATIONS TO OBSERVE EXISTING BAR JOIST AT NEW D.O.S. AND R.T.U. LOCATIONS. CONTRACTOR WILL NEED TO PROVIDE A LIFT OR LADDER ON SITE TO BE USED AS DIRECTED BY GRA PERSONNEL TO GAIN ACCESS TO EXISTING BAR JOIST.

CONTRACTOR SHALL FIELD VERIFY ALL DIMENSIONS & EXISTING CONDITIONS IN THE FIELD. CONTACT ENGINEER IF CONDITIONS VARY FROM THOSE SHOWN ON THE DRAWINGS.

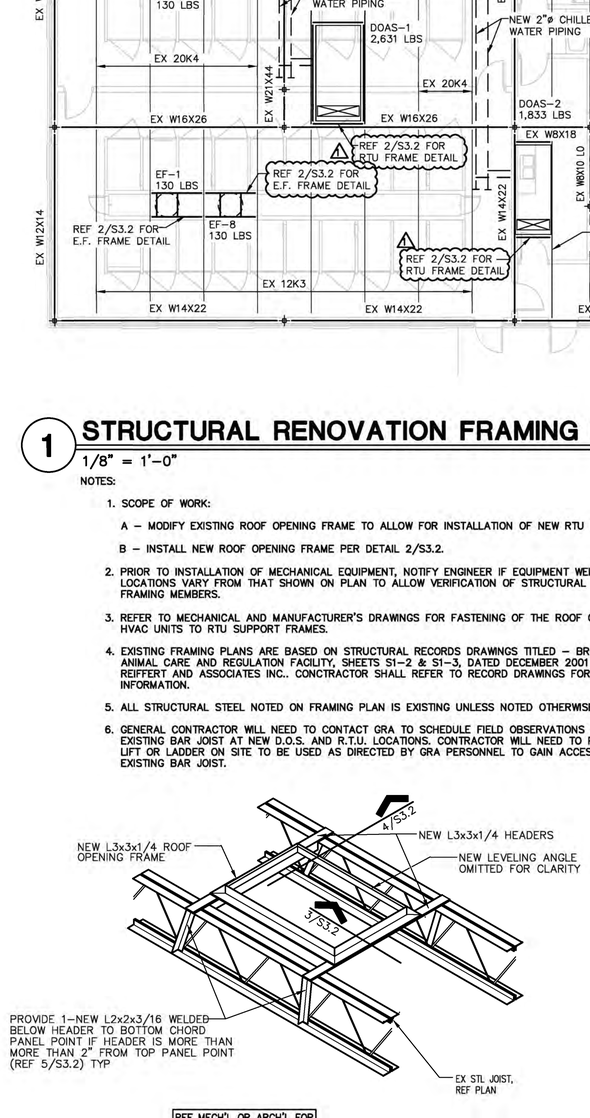

REF MECH'L OR ARCH'L FOR OPENING SIZE & LOCATION

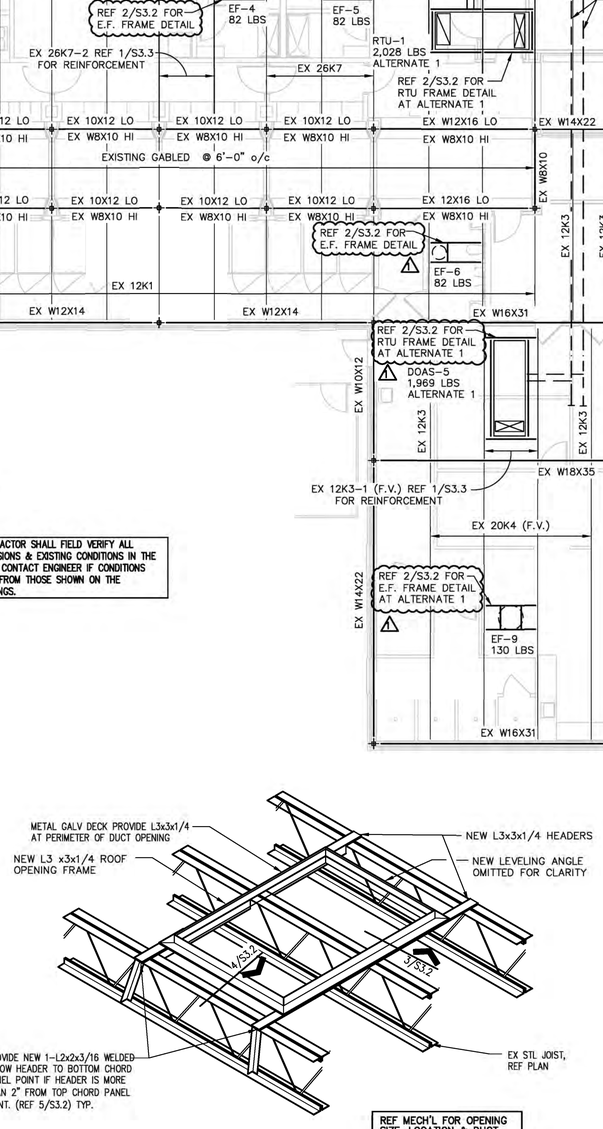

REF MECH'L FOR OPENING SIZE, LOCATION & DUCT OPENING REQUIREMENTS

2 ROOF OPENING FRAME DETAILS

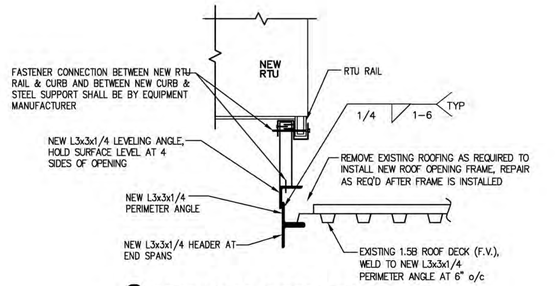

3 NEW RTU SUPPORT FRAME

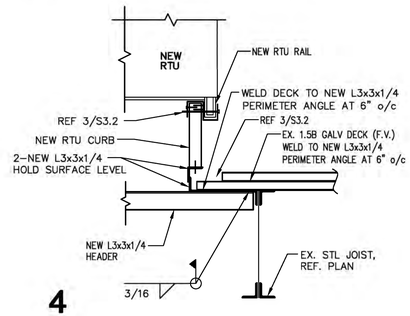

4

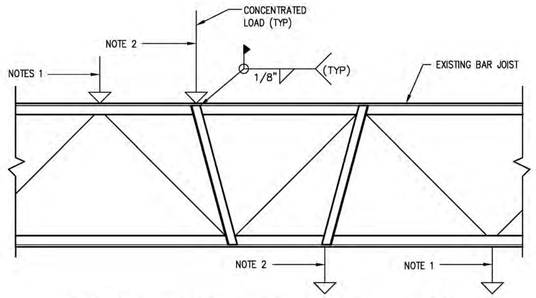

5 TYP. CONCENTRATED LOAD DETAIL

NOTES:

1. CONCENTRATED LOAD LOCATED AT PANEL POINT LOCATION – NO ADDTIONAL ANGLES REQUIRED.
2. CONCENTRATED LOAD (100 LBS. OR HEAVIER) NOT LOCATED AT PANEL POINT LOCATION – PROVIDE L2x2x1/4 TO PANEL POINT AS SHOWN.

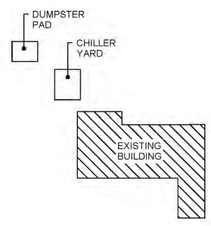

NO:	REVISION:	BY:
1	ADDENDUM #1 4/17/2026	

COPY NO:

ROLANDO R. RUBIANO 86369 LICENSED PROFESSIONAL ENGINEER STATE OF TEXAS

4·17·2026

HVAC UPGRADES AT BROWNSVILLE ANIMAL REGULATION AND CARE FACILITY

OLMITO, TEXAS

F.M. 511

ethos engineering

1126 SOUTH COMMERCE ST.
HARLINGEN, TX
PHONE: 956-230-3435
TEXAS REGISTERED ENGINEERING FIRM F-15998

DATE:	MARCH 23, 2026
CHECKED BY:	BD
DRAWN BY:	HR
PROJECT NO.:	1178-50
CAD FILE:	-
SHEET:	S3.2

GREEN, RUBIANO & ASSOCIATES
CONSULTING STRUCTURAL ENGINEERS
1220 WEST HARRISON
HARLINGEN, TEXAS 78550
(956)428-4491 EM: GRUBIANO@HOTMAIL.COM
FIRM REGISTRATION # F-4145

COPYRIGHT 2024 BY GREEN, RUBIANO & ASSOCIATES

Form 1 – Proposal Acknowledgment & Authorized Contact

Purpose

This form officially acknowledges the Respondent's intention to submit a response to this solicitation. It also identifies the authorized contact who is empowered to act on behalf of the Respondent and will serve as the primary point of contact throughout the project. By submitting this form, the Respondent acknowledges and accepts all terms, conditions, and requirements stated in the solicitation.

Solicitation No. 196-26-ISD-RFP / Addendum #2

Respondent Information

Legal Entity Name: Ziwa Corporation

Primary Contact Name: Luis Flores

Title: Estimator

Telephone: 956-542-8167 Email: luis@ziwacorp.com

Acknowledgment of Solicitation Requirements

By signing below, the Respondent certifies and acknowledges the following:

1. The Respondent has examined the solicitation documents and addenda and is familiar with all conditions affecting the response.
2. The Respondent understands that submission of this acknowledgment constitutes a binding offer subject to the terms, conditions, and validity period stated in the solicitation package issued by the City of Brownsville.
3. The Respondent certifies that they possess full authority to bind the entity and to enter into an agreement with the City of Brownsville if selected.
4. The Respondent acknowledges that failure to submit this completed form or to sign below may result in rejection of the response as nonresponsive.

Certification

By signing below, the undersigned Respondent certifies that all statements made herein are true and correct and that they are duly authorized to sign this form and bind the Respondent to its contents.

Signature: _____

Printed Name: Jorge De La Garza

Title: Presidents

Date: 04/30/2026

Company Name: Ziwa Corporation

Phone: 956-542-8167

Email: jdlg@ziwacorp.com

ADDENDUM #2

Request For Competitive Sealed Proposals For: HVAC Upgrades at the Brownsville Animal Regulation and Care Facility

RFP#: 196-26-ISD-RFP

ADDENDUM NOTICE
This Addendum modifies the original solicitation documents. Respondents are responsible for reviewing all changes, clarifications, and revisions contained herein.

ACTION REQUIRED:
Addendum acknowledgment shall be completed in Form 1 – Proposal Acknowledgment & Authorized Contact.

Separate signatures, email confirmations, or individual acknowledgments for each addendum are not required unless explicitly stated in this Addendum.

CONTACT INFORMATION:

Jaydy Valdez – Buyer
City of Brownsville – Procurement Department
City Hall 1001 E. Elizabeth St. 1ST FLOOR Suite No. 101 Brownsville, Texas 78520
Phone: (956) 548-6087
Email: purchasing@brownsvilletx.gov

Clarifications/Additional Information/Changes to the Original Solicitation Package:

-Please see modifications below.

1126 South Commerce
Harlingen, TX 78550
Off: (956) 230-3435
Fax: (956) 720-0830
www.ethoseng.net

April 27, 2026 04/27/2026

HVAC Upgrades at Brownsville Animal Regulation and Care Facility

ADDENDUM NO. 2

A. PURPOSE AND INTENT

This addendum is issued for the purpose of modifying the plans for the project referenced above. This addendum shall become part of the contract and all contractors shall be bound by its content. All aspects of the drawings not covered herein shall remain the same.
The General Conditions shall govern all parts of the work and apply in full force to this addendum.

B. SCOPE

I. Clarifications

1. Permit Fees:
    a) Contractor shall be responsible for obtaining and paying for all permits, fees, and costs associated with the City of Brownsville Permitting Process, including but not limited to building permits, trade permits, inspections, and related requirements.
    b) Owner will be responsible only for costs associated with Brownsville Public Utilities Board (BPUB) fees related to the new transformer and utility service required for the new 480v electrical service, unless noted otherwise on the plans. Refer to electrical plans for materials, labor and systems that shall be provided by Contractor. Coordinate with Electrical Contractor.
    c) All other permitting, fees, and associated costs shall be included in the contractor's bid.

2. Existing Storage/Shipping Container located in the back of the property will be removed from the site by the Owner.

3. Sequences of Construction
    a) See construction sequencing phasing table and associated hvac zone exhibit on the drawings. The work is intended to be performed and completed in phases and by hvac zones to minimize disruption to building operations.

b) The provided sequencing is intended to establish the general approach and phasing of the project. Contractor shall utilize this information, along with all other contract documents, to develop a complete and detailed construction schedule.

c) Failure to account for project phasing, HVAC zone implementation, continuity of operations, and coordination requirements shall not be basis for additional compensation.

d) This addendum includes a color-coded exhibit identifying hvac zones associated with the sequence of construction. The exhibit is diagrammatic and provided for reference only. Refer to the drawings for complete scope and phasing requirements.

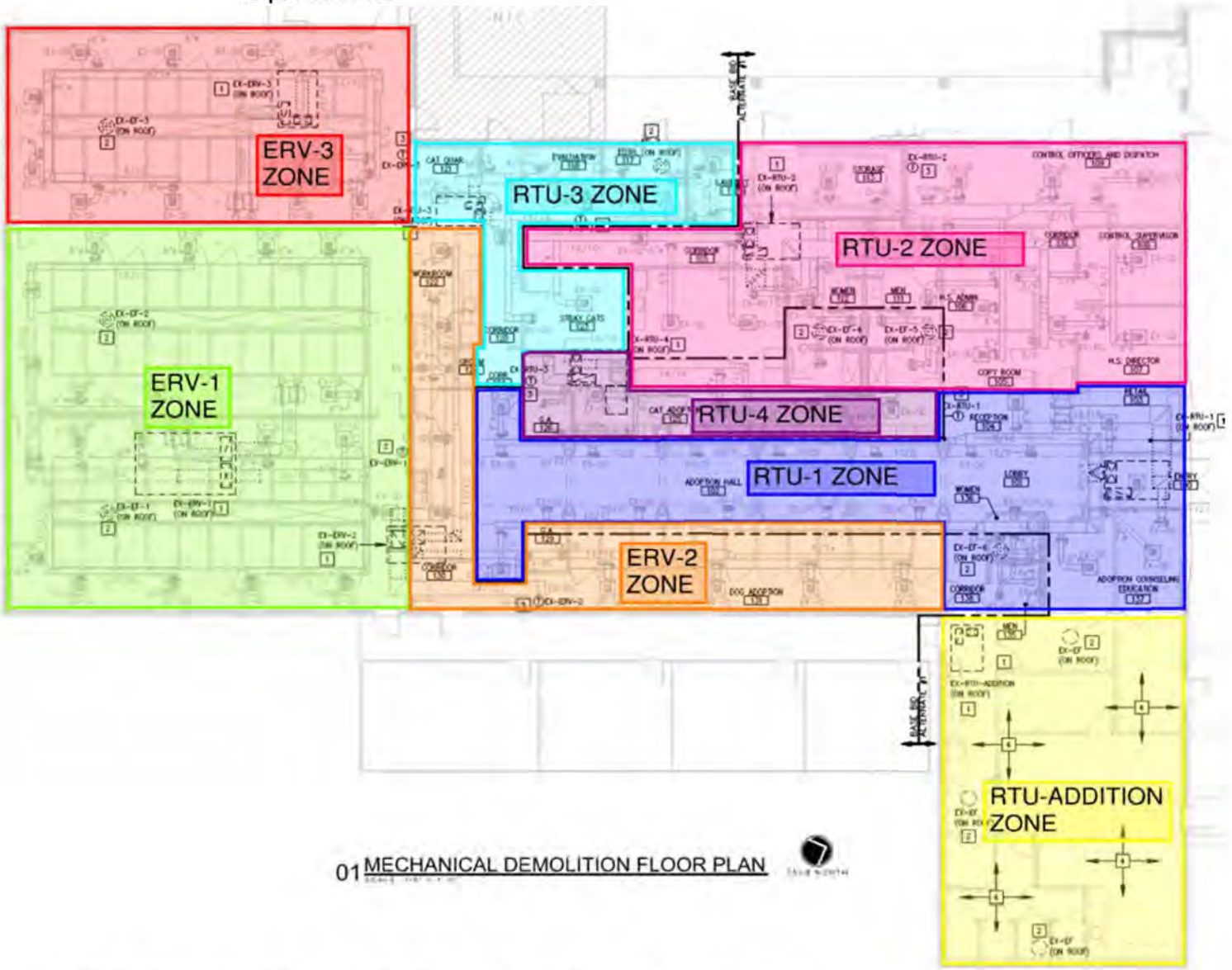

01 MECHANICAL DEMOLITION FLOOR PLAN

II. Drawings

1. Sheet C2:
    a) See attached revised Civil Engineering sheet illustrating the relocation of the dumpster and associated notes.

    b) Provide dumpster enclosure as follows:
        i. DUMPSTER ENCLOSURE SHALL CONSIST OF A 6'-6" HIGH WOOD PRIVACY FENCE WITH DOUBLE SWING GATES, SIMILAR TO TYPICAL RESIDENTIAL PRIVACY FENCE CONSTRUCTION.
        ii. FENCE SHALL BE CONSTRUCTED OF PRESSURE-TREATED WOOD POSTS (4"X4" MIN.) SET IN CONCRETE FOOTINGS, WITH HORIZONTAL WOOD RAILS (2"X4" MIN.) AND VERTICAL WOOD PICKETS (1"X6" NOMINAL) INSTALLED OPAQUE.
        iii. GATES SHALL BE DOUBLE SWING TYPE, FULL HEIGHT, WITH WOOD FRAMING AND DIAGONAL BRACING, AND FINISHED WITH MATCHING VERTICAL PICKETS.
        iv. PROVIDE HEAVY-DUTY GALVANIZED HINGES AND LATCH WITH PROVISION FOR PADLOCK.
        v. ALL WOOD SHALL BE PRESSURE-TREATED FOR EXTERIOR USE. CONTRACTOR SHALL APPLY WEATHER-RESISTANT STAIN OR SEALER.
        vi. PROVIDE CONCRETE PAD ASD PER STRUCTURAL PLANS AND ENSURE GATE OPENING WIDTH IS SUFFICIENT FOR DUMPSTER ACCESS AND MANEUVERABILITY.

2. Sheet M1.0:
    a) See attached revised sheet. Added Sequences of Construction.

3. Sheet M3.3:
    a) Cut and repair existing asphalt pavement. See snapshot below.

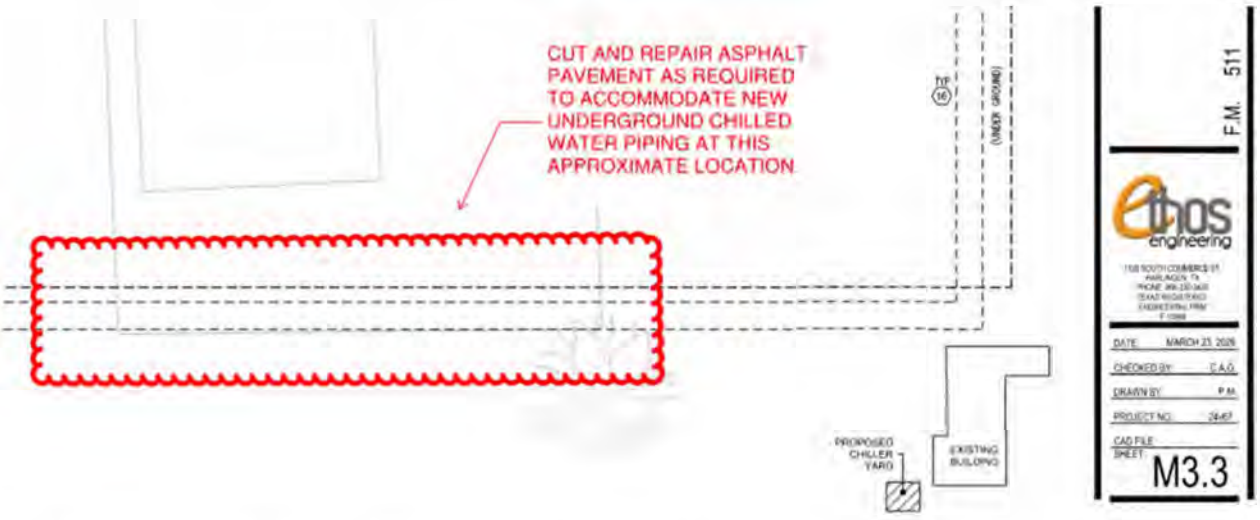

4. Sheet E3.1:
    a) See attached revised Electrical Renovation Floor Plan illustrating the relocation of Panelboard "MDP".

5. Sheet E4.1:
    a) See attached revised Electrical Renovation Floor Plan illustrating the relocation of Panelboard "MDP".

6. Sheet E5.1:
    a) See attached revised Panelboard "MDP" schedule for adding lockable breakers for transformers T-C and T-MDL.

CALL TEXAS 811 FOR SPOTTING OF UTILITIES PRIOR TO ANY TYPE OF CONSTRUCTION! 1-800-344-8377

LEGEND

25.3	EXISTING GROUND SURFACE ELEVATION
TS 24.70	TOP OF SIDEWALK ELEVATION
TC 23.96	TOP OF CURB ELEVATION
P 23.96	PAVEMENT ELEVATION
G 21.00	GUTTER ELEVATION
24.9	FINISHED GROUND SURFACE ELEVATION
	DIRECTION OF DOWNWARD SLOPE
	SURFACE SWALE

NOTES

1. GRADE ALL AREAS (SMOOTH AND FINELY GRADED AT A UNIFORM SLOPE AS NEEDED TO RECIEVE HYDROMULCHING OR SOD) TO DRAIN TO THE NEAREST DRAINAGE OUTLET OR SWALE
2. ALL DEBRIS AND EXCESS EARTH MATERIAL GENERATED BY THE SITEWORK OPERATIONS WILL BECOME PROPERTY OF THE CONTRACTOR TO BE REMOVED FROM THE SITE AND PROPERLY DISPOSED AT HIS EXPENSE.
3. NO SIDEWALKS SHALL HAVE A CROSS SLOPE GREATER THAN 2% OR LONGITUDINAL SLOPE GREATER THAN 5% AND SHALL MEET ADA AND TAS REQUIREMENTS. RAMPS SHALL HAVE DETECTABLE WARNING SURFACE AND SLOPE NOT TO EXCEED 8.33%.
4. BACKFILL ALL CURB & GUTTER, PAVEMENT EDGES AND SIDEWALKS TO 3" BELOW TOP OF CURB OR SIDEWALK AND SLOPE TO EXISTING GROUND AT 10 TO 1 OR TO NEAREST DRAINAGE OUTLET
5. NO IRRIGATION SPRINKLER HEADS OR PIPING SHALL BE INSTALLED IN ANY AREA UNTILL FINAL GRADING IN THAT AREA HAS BEEN COMPLETED AND APPROVED BY SITEWORK ENGINEER.
6. SEE STRUCTURAL PLANS FOR DUMPSTER FOUNDATION SPECIFICATIONS.
7. SEE STRUCTURAL PLANS FOR CHILLER FOUNDATION SPECIFICATIONS.
8. MAINTAIN GUTTER FLOW
9. FIRE CONNECTION, VALVES AND LINE TO BE SIZED AND INSTALLED BY A LICENSED FIRE LINE INSTALLER
10. CUT AND INSTALL 90° FITTING, MATCH SIZE TO EXISTING FIRE LINE
11. 6" CONCRETE WITH #4 BAR @ 12" BOTH WAYS. 6" MOISTURE CONDITION AND RECOMPACT EXISTING SUBGRADE COMPACT TO 95% STANDARD PROCTOR DENSITY (ASTM D698) AT OPTIMUM MOISTURE TO 2 PERCENTAGE POINTS ABOVE MOISTURE CONTENT.
12. REMOVE EXISTING FIRE LINE
13. DRILL AND DOWEL 6" DEEP INTO EXISTING CONC. AT 12" O.C. AND INSERT #3 BAR X 18" LONG.
14. INSTALL CURB AND GUTTER MONOLITHICALLY WITH SLAB
15. PROVIDE YELLOW NO-PARKING STRIPING IN FRONT OF DUMPSTER ENCLOSURE USING TRAFFIC MARKING PAINT CONFORMING TO FEDERAL SPECIFICATION TT-P-115F, TYPE III OR APPROVED EQUAL. APPLY 4" WIDE DIAGONAL LINES AT 45° ANGLE, SPACED 24" O.C..

THE SEAL APPEARING ON THIS DOCUMENT WAS AUTHORIZED BY JAMES E. ROSE, P.E. 44096 3/23/26
ALTERATION OF A SEALED DOCUMENT WITHOUT PROPER NOTIFICATION TO THE RESPONSIBLE ENGINEER IS AN OFFENSE UNDER THE TEXAS ENGINEERING PRACTICE LAW

NO:	REVISION:	BY:

COPY NO:

STATE OF TEXAS
JAMES E. ROSE
44096
LICENSED
PROFESSIONAL ENGINEER

HVAC UPGRADES AT BROWNSVILLE ANIMAL REGULATION AND CARE FACILITY

OLMITO, TEXAS

F.M. 511

UTILITY, PAVING AND GRADING PLAN 1"=20'
REVISED ADDENDUM NO. 2 4-20-26

ethos engineering
1126 SOUTH COMMERCE ST.
HARLINGEN, TX
PHONE: 956.230.3435
TEXAS REGISTERED ENGINEERING FIRM F-15098

Mejia & Rose, Incorporated
Engineering Surveying
T.B.P.E. Reg. No. F-2670
T.B.P.L.S. Reg. No. 10023900
1643 West Price Road (956) 544-3022
P.O. Box 3761 Brownsville, Texas 78520
Fax (956) 544-3068

DATE:	MARCH 23, 2026
CHECKED BY:	C.A.G.
DRAWN BY:	
PROJECT NO.:	24v67
CAD FILE:	-
SHEET:	C2

COORDINATION:

1. GENERAL:
   a. CONTRACTOR SHALL REVIEW COMPLETE DOCUMENTS PRIOR TO SUBMITTAL OF PROPOSAL TO GAIN COMPLETE UNDERSTANDING OF PROJECT SCOPE, WORK BY OTHERS, AND MECHANICAL WORK ASSOCIATED WITH OTHER DISCIPLINES.
   b. TIME OR MONEY ALLOWANCES WILL NOT BE MADE TO ACCOMMODATE UTILITY CONFLICTS THAT CAN BE REASONABLY RESOLVED BY COORDINATION DURING SHOP DRAWING STAGE.
   c. PROVIDE COORDINATION DRAWINGS OF REFLECTED CEILING PLAN AND SECTION ABOVE CEILING SHOWING WORK OF ALL AFFECTED TRADES. DO NOT PROCEED WITH FABRICATION WORK UNTIL COORDINATION DRAWINGS HAVE BEEN APPROVED BY A/E.
2. SITE:
   a. TIME OR MONEY ALLOWANCES WILL NOT BE MADE TO ACCOMMODATE UTILITY CONFLICTS THAT CAN BE REASONABLY RESOLVED BY COORDINATION DURING SHOP DRAWING STAGE.
3. ARCHITECTURAL AND STRUCTURAL:
   a. REFER TO ARCHITECTURAL AND STRUCTURAL PLANS FOR DETAILS OF CONSTRUCTION, INCLUDING BEAMS, FLOOR AND WALL PENETRATIONS, CHASES, AND REFLECTED CEILING PLANS. VERIFY OPENING SIZES WITH EQUIPMENT FURNISHED.
   b. SLEEVE ALL EXTERIOR WALL AND GRADE BEAM PENETRATIONS. GRADE BEAM PENETRATIONS SHALL BE MADE WITHIN MIDDLE 1/3 OF VERTICAL SPAN OF BEAM.
   c. SEAL AROUND DUCTS AND PIPING AT ALL WALLS, A/C ROOMS AND WALL LOUVER PENETRATIONS WITH FIREPROOF CAULKING. RE: SPECS. PROVIDE ESCUTCHEON PLATES AND FLASHING AROUND PENETRATION, BOTH INSIDE AND OUTSIDE, TO PROVIDE FINISHED LOOK.
4. SPATIAL COORDINATION:
   a. COORDINATE ALL WORK WITH OTHER TRADES; COORDINATE SCHEDULE OF WORK WITH ALL SUB-CONTRACTORS TO ACHIEVE SMOOTH FLOW OF CONSTRUCTION.
   b. SPACES ABOVE CEILING ARE CONGESTED. DESIGN INTENT IS THAT UTILITIES BE INSTALLED TIGHT AGAINST CEILING STRUCTURE TO EXTENT POSSIBLE, WHILE RETAINING ADEQUATE MAINTENANCE ACCESS PER CODES.
   c. IN CASE OF CONFLICTS, ITEMS SHALL BE ARRANGED ACCORDING TO THE FOLLOWING PRIORITIES: LIGHTING, FIRE PROTECTION, HVAC. PROVIDE OFFSETS/RISES/DROPS REQUIRED TO RESOLVE CONFLICTS WITH OTHER UTILITIES, AND TO ACCOMMODATE ALL UTILITIES ABOVE CEILINGS.
   d. IN GENERAL, REROUTE SMALLER DUCTS/PIPES THROUGH JOISTS TO RESOLVE CONFLICTS WITH LARGER. PERFORM REROUTING IN MOST EFFICIENT MANNER POSSIBLE, AND IN ACCORDANCE WITH INDUSTRY STANDARDS.
   e. PROVIDE COORDINATION DRAWINGS OF REFLECTED CEILING PLAN AND SECTION ABOVE CEILING SHOWING WORK OF ALL AFFECTED TRADES. DO NOT PROCEED WITH FABRICATION WORK UNTIL COORDINATION DRAWINGS HAVE BEEN APPROVED BY A/E.
   f. IN GENERAL ROUTE DUCTS/PIPES IN MOST EFFICIENT MANNER POSSIBLE, AND IN ACCORDANCE WITH INDUSTRY STANDARDS.
   g. SEE ELECTRICAL PLANS FOR EXACT LOCATION OF ELECTRICAL PANELS TO AVOID DUCTWORK AND PIPING RUNNING OVER THESE AREAS. COORDINATE WITH ELECTRICAL CONTRACTOR.
   h. LOCATE AIR DEVICES AS SHOWN. COORDINATE WITH OTHER TRADES TO AVOID CONFLICT AND ADJUST LOCATION IF NEEDED WITHOUT COMPROMISING AIR DEVICES PERFORMANCE.
5. CONTROLS:
   a. REFER TO SPECIFICATIONS FOR CONTROL COMPONENTS AND DEVICES TO BE COORDINATED WITH MECHANICAL WORK.
   b. DRAWINGS SHOW GENERAL LOCATION OF THERMOSTATS. UNLESS NOTED OTHERWISE, INSTALL THERMOSTATS AT 48" ABOVE FINISHED FLOOR. WIRING SHALL BE IN CONCEALED WALLS. IN CASE OF CONFLICTS WITH FURNITURE, WINDOWS, ETC., COORDINATE EXACT LOCATION WITH ARCHITECT AND ENGINEER.

EQUIPMENT:

1. EQUIPMENT INSPECTION:
   a. FIELD VERIFY ALL CONDITIONS AND MEASURE DIMENSIONS WITHIN THE BUILDING PRIOR TO ORDERING EQUIPMENT AND/OR PROCEEDING WITH INSTALLATION.
   b. ALL EQUIPMENT SHALL BE FACTORY TESTED, AND CONTRACTOR SHALL VERIFY EQUIPMENT CONDITION PRIOR TO INSTALLATION. CONTRACTOR IS RESPONSIBLE FOR EQUIPMENT DAMAGED DURING MOVING AND INSTALLATION.
   c. EQUIPMENT FOUND DEFECTIVE PRIOR TO FINAL ACCEPTANCE SHALL BE REPLACED AT NO COST TO OWNER.
2. EQUIPMENT ACCESS:
   a. FOR EQUIPMENT WHICH MAY REQUIRE PERIODIC SERVICING (SUCH AS AIR HANDLERS) AND WHICH IS LOCATED ABOVE A SUSPENDED CEILING, CONTRACTOR IS TO PROVIDE A MARKER ON CEILING GRID WHICH CLEARLY INDICATES WHICH CEILING TILE IS TO BE REMOVED TO MOST CONVENIENTLY ACCESS EQUIPMENT SIDE NEEDING SERVICING. THE MARKER IS TO BE ROUND DOT OF HEAVY DUTY COLORED PAPER, WITH DIRECTION INDICATION, WITH ADHESIVE BACKING. OBTAIN OWNER APPROVAL FOR COLOR, SIZE, AND TYPE PRIOR TO INSTALLATION.
   b. INSTALL ALL DAMPERS, FANS, ETC. IN ACCESSIBLE LOCATIONS. PROVIDE ADEQUATELY SIZED ACCESS DOORS WHERE REQUIRED.
3. EQUIPMENT INSTALLATION:
   a. PROVIDE SPRING HANGER TYPE VIBRATION ISOLATORS TO SUPPORT SUSPENDED AHUS, FANS AND OTHER POWERED VIBRATING EQUIPMENT. PROVIDE FLEXIBLE DUCT CONNECTORS.
   b. FOR ALL AIR CONDITIONING UNITS WHICH ARE LOCATED ABOVE SUSPENDED CEILINGS, OR ABOVE HARDWOOD FLOORS, OR OTHER BUILDING SURFACES / MATERIALS WHICH COULD BE DAMAGED BY LEAKING WATER, PROVIDE A SECONDARY DRAIN PAN BENEATH THE UNIT, WITH EITHER: A) A SEPARATE CONDENSATE DRAIN LINE, COPPER, INSULATED WITH 1/2" ARMAFLEX, AND PIPED TO A SUITABLE DISPOSAL POINT (SUCH AS TO A LAVATORY DRAIN TAILPIECE, FLOOR DRAIN, ETC; DO NOT TERMINATE SECONDARY DRAIN PIPE THROUGH A SUSPENDED CEILING WHERE IT WILL DRIP INTO A SINK OR LAVATORY UNLESS APPROVED BY ENGINEER); OR B) A FLOAT SWITCH OR MOISTURE SENSING SWITCH, LOCATED IN SECONDARY DRAIN PAN, AND ELECTRICALLY INTERLOCKED WITH UNIT FAN TO TURN UNIT OFF WHEN MOISTURE IS SENSED.
   c. COMPLETELY WEATHERPROOF ALL EQUIPMENT, DUCTS, PIPES AND OTHER DEVICES AND MATERIALS INSTALLED OUTSIDE THE BUILDING, IN PARKING AREA, OR OTHERWISE EXPOSED TO WEATHER. AS A MINIMUM, WEATHERPROOFING SHALL INCLUDE, BUT IS NOT LIMITED TO THE FOLLOWING: JACKETING FOR ALL PIPING INSULATION, VALVES AND ACCESSORIES RATED FOR OUTDOOR SERVICE, ELECTRICAL ENCLOSURES NEMA 4X-SS. PROVIDE ELECTRICAL HEAT TRACING FOR UTILITIES SUSCEPTIBLE TO FREEZING.
   d. AFFIX ID TAGS TO ALL MECHANICAL EQUIPMENT PER SPECIFICATIONS.
4. EQUIPMENT INSULATION:
   a. INSULATE ALL SURFACES THAT ARE CAPABLE OF BECOMING COLD AND COLLECTING CONDENSATE. THIS INCLUDES SUPPLY DIFFUSERS AND CONNECTING DUCTWORK / TRANSITION PIECES.
5. PLUMBING:
   a. PROVIDE CODE RECOMMENDED CLEARANCE OR MINIMUM 10' BETWEEN EXHAUST FANS DISCHARGES, PLUMBING VENTS AND AIR INTAKES. COORDINATE LOCATIONS WITH PLUMBING CONTRACTOR.
   b. PROVIDE INSULATED AND TRAPPED CONDENSATE DRAIN LINES FROM ALL AIR CONDITIONING EQUIPMENT AND TERMINATE TO NEAREST FLOOR DRAIN OR OTHER APPROVED RECEPTACLES. COORDINATE DRAINS WITH PLUMBING.
6. ELECTRICAL:
   a. CONTRACTOR IS RESPONSIBLE FOR COORDINATION WITH ELECTRICAL CONTRACTOR REGARDING EQUIPMENT SIZES AND TYPES OF ELECTRICAL INTERFACE EQUIPMENT REQUIRED.
   b. DUE TO VARIATIONS IN EQUIPMENT CHARACTERISTICS BY DIFFERENT EQUIPMENT SUPPLIERS, MECHANICAL EQUIPMENT ULTIMATELY PROVIDED MAY DIFFER IN HORSEPOWER OR AMPERAGE REQUIREMENTS FROM THAT SPECIFIED IN THESE DRAWINGS. COORDINATE WITH GENERAL CONTRACTOR PRIOR TO BIDDING, AND PRIOR TO SUBMITTALS AND ORDERING EQUIPMENT, TO ENSURE THAT EQUIPMENT ELECTRICAL REQUIREMENTS ARE CONVEYED TO ELECTRICAL CONTRACTOR. IT IS SOLELY CONTRACTOR'S RESPONSIBILITY TO ENSURE COMPATIBILITY ISSUES ARE COORDINATED.

DUCTWORK:

1. DUCTWORK GENERAL:
   a. DRAWINGS ARE DIAGRAMMATIC IN NATURE. FOR CLARITY SAKE, MOST DUCT OFFSETS/RISES/DROPS ARE NOT SHOWN. WHERE DUCTS PENETRATE WALLS, INSTALL THEM PERPENDICULAR TO WALL.
   b. RECTANGULAR AND ROUND DUCTWORK SHALL BE GALVANIZED STEEL. SIZES SHOWN ARE INSIDE CLEAR DIMENSION, UNLESS NOTED OTHERWISE.
   c. VERIFY BOTTOM OF DUCT ELEVATION AND COORDINATE WITH OTHER TRADES.
   d. CONSTRUCT AND LEAKAGE TEST ALL DUCTWORK BASED ON SPECIFICATIONS AND SMACNA REQUIREMENTS, WHICHEVER IS MORE STRINGENT. COORDINATE PRESSURE CLASSES WITH EQUIPMENT SCHEDULES.
   e. FLEXIBLE DUCTS MAXIMUM LENGTH SHALL NOT EXCEED 6 FEET. USE OF FLEXIBLE DUCTWORK IS LIMITED TO AREAS WITH AN ACCESSIBLE SUSPENDED CEILING. PINCHED DUCT WILL HAVE TO BE REPLACED.
   f. IN AREAS WHERE DUCT CONFLICTS CANNOT BE AVOIDED, ROUTE SMALLER DUCTS THROUGH ROOF JOISTS.
   g. LOCATE AIR DEVICES AS SHOWN. COORDINATE WITH ELECTRICAL, IF NEEDED. RELOCATE DIFFUSER TO ADJACENT TILE.
2. DUCTWORK INSULATION:
   a. WRAP ALL OUTSIDE AIR, SUPPLY AND RETURN DUCTWORK UNLESS NOTED OTHERWISE.
   b. IN ADDITION, FOR ACOUSTICAL PERFORMANCE INTERNALLY LINE FIRST 10' OF SUPPLY AND LAST 10' OF RETURN DUCTWORK.
   c. PROVIDE ACOUSTICAL LINING FOR ALL TRANSFER DUCTS AND RETURN AIR ELBOWS.
   d. INSULATION ON DUCT SHOULD TO BE PROPERLY TAPED AND MASTICS MUST BE APPLIED ON SEAMS AND JOINTS AND AT ENDS ADJACENT TO DUCT FLANGES AND FITTINGS. FOR DUCT SIDES WITH DIMENSIONS LARGER THAN 18 INCHES, APPLY ADDITIONAL PINS AND CLIPS TO HOLD INSULATION TIGHTLY AGAINST SURFACE AT CROSS BRACING.
   e. INSULATE ALL EXHAUST DUCTWORK 10 FEET FROM EXTERIOR OPENING.
3. DUCT FITTINGS:
   a. WHERE RECTANGULAR TEE FITTINGS ARE SHOWN, PROVIDE FITTING WITH ADJUSTABLE DIVIDER SHEET AND TURNING VANES.
   b. WHERE RECTANGULAR MAIN AND BRANCH CONNECTIONS ARE SHOWN, PROVIDE EXTRACTOR VANES. NOT APPLICABLE TO DUCTWORK DOWNSTREAM OF VAV BOXES.
   c. PROVIDE TURNING VANES IN ALL ELBOWS PER SPECS.
4. DAMPERS:
   a. IN AN ACCESSIBLE LOCATION, PROVIDE MANUAL-TYPE VOLUME BALANCING DUCT DAMPERS IN ALL SUPPLY, RETURN AND EXHAUST DUCT BRANCHES TO INDIVIDUAL GRILLES, REGISTERS AND DIFFUSERS (GRD). TO MINIMIZE NOISE INSTALL DAMPERS CLOSER TO THE BRANCH CONNECTION THAN TO THE GRD. IN DUCTWORK, PROVIDE ACCESS DOORS TO ALL DAMPERS.
   b. ABOVE INACCESSIBLE CEILINGS AND IN CASE DUCT CONFIGURATION DOES NOT ALLOW FOR INSTALLATION OF DAMPER IN DUCTWORK, PROVIDE REMOTE MANUAL DAMPER BY YOUNG REGULATOR OR EQUAL, (CABLE OPERATED SYSTEM) WITH ENGINEER'S PERMISSION CONTRACTOR MAY PROVIDE VOLUME DAMPER THAT IS INTEGRAL TO GRD.
   c. PROVIDE BALANCING DAMPERS ON ALL EXHAUST GRILLES TO ACHIEVE DESIRED AIRFLOW.
   d. PROVIDE DYNAMIC FIRE DAMPERS (RUSKIN DIDB20, TYPE B OR EQUAL) IN ACCORDANCE WITH CODE REQUIREMENT, IN ALL PENETRATIONS OF FIRE RATED WALLS, OCCUPANCY SEPARATION WALLS, BARRIERS AND PARTITIONS, AND EXIT CORRIDORS. REFER TO ARCHITECTURAL PLANS FOR RATED WALLS. PROVIDE ACCESS DOORS AS PER CODE REQUIREMENTS, EQUAL TO RUSKIN ADH-22 FOR RECTANGULAR DUCT, ACUDOR RD FOR ROUND DUCT. WHERE GRILLE ACCESS IS INDICATED, ADDITIONAL DUCT ACCESS DOOR IS NOT REQUIRED. WHERE THE CEILING IS FIRE RATED PROVIDE FIRE RATED AIR DEVICES FOR TRANSFER & RETURN AIR GRILLES AND SUPPLY AIR DIFFUSERS AS PER CODE REQUIRMENTS. REFER TO ARCHITECTURAL PLANS FOR RATED CEILINGS.
   e. PROVIDE ACCESS DOORS (NOT SHOWN IN DRAWINGS) FOR INSPECTION OF DUCT MOUNTED EQUIPMENT SUCH AS FIRE/SMOKE DAMPERS, MANUAL BALANCING DAMPERS AND TURNING VANES. IN AREAS WITH HARD CEILING COORDINATE ACCESS DOOR LOCATIONS AND CEILING ACCESS PANELS WITH OTHER TRADES.

INSULATION:

1. FIBERGLASS INSULATION MAY NOT BE USED ON ANY COLD PIPING SURFACES; ONLY CLOSED CELL INSULATION IS ACCEPTABLE.
2. PROVIDE INSULATION ON ALL SURFACES CAPABLE OF CREATING CONDENSATION.

CODES & ORDINANCES:

1. GENERAL:
   a. UNLESS DRAWINGS OR SPECIFICATIONS HAVE MORE STRINGENT REQUIREMENTS, PERFORM ALL WORK PER APPLICABLE VERSION OF INTERNATIONAL BUILDING CODES, AND LOCAL CODES AND ORDINANCES.
   b. PRIOR TO SUBMITTING PROPOSAL, NOTIFY ENGINEER OF ANY ASPECTS OF DESIGN WHICH ARE THOUGHT TO BE IN NONCOMPLIANCE WITH APPLICABLE CODES.
2. PERMITS:
   a. CONTRACTOR IS RESPONSIBLE FOR ALL PERMITS AND FEES ASSOCIATED WITH PROJECT, INCLUDING FEES FOR INSPECTIONS, APPLICATIONS, AND PROVISION OF NEW SERVICES.
   b. CONTRACTOR WHO WILL ACTUALLY PERFORM WORK MUST APPLY FOR ALL REQUIRED PERMITS.
4. APPROVALS AND INSPECTIONS:
   a. OBTAIN APPROVAL FROM CITY FIRE DEPARTMENT AND BUILDING AND SAFETY DEPARTMENT PRIOR TO INSTALLATION OF ANY FIRE RELATED ITEMS.
   b. COORDINATE PRESSURE TESTS, INSPECTIONS AND APPROVAL FOR ALL SYSTEMS WITH PERMITTING OFFICER, OWNER AND ENGINEER.

GENERAL NOTES:

1. CONTRACT RELATED:
   a. COORDINATE WORK AMONG ALL DISCIPLINES. IT IS NOT THE INTENT OF THESE DOCUMENTS TO DICTATE WHO MUST DO THE WORK. ALL WORK SHOWN IS THE RESPONSIBILITY OF THE (PRIME) CONTRACTOR.
   b. WORK TO BE DONE UNDER ALLOWANCES BECOMES AN INTEGRAL PART OF THE PROJECT AND RESPONSIBILITY OF CONTRACTOR ONCE ALLOWANCE IS APPROVED.
   c. CONTRACTOR SHALL NOT PROCEED WITH ANY WORK INVOLVING A CHANGE IN PROJECT SCOPE OR COST WITHOUT FIRST HAVING OBTAINED ENGINEER'S APPROVAL IN WRITING. UNLESS ENGINEER HAS AGREED TO SUCH CHANGE PRIOR TO IT BEING DONE, AND HAS AGREED THAT AN INCREASE IN COST ASSOCIATED WITH SUCH CHANGE IS WARRANTED; CONTRACTOR WILL NOT BE REIMBURSED FOR SUCH CHANGE.
2. TEST & BALANCE:
   a. TEST & BALANCE SHALL BE PERFORMED UNDER GENERAL CONTRACTOR, SEPARATE FROM MECHANICAL CONTRACT. DURING BIDDING, CONTRACTOR SHALL SUBMIT A COPY OF EVIDENCE THAT TAB AGENT MEETS THE QUALIFICATIONS SPECIFIED UNDER DIV. 23 SECTION 230593 TO PRIME CONTRACTOR.
   b. CONTRACTOR SHALL COORDINATE TAB ACTIVITIES WITH TAB CONTRACTOR.

MECHANICAL SYMBOLS LEGEND

12"x12"	DUCT SIZE: FIRST FIGURE IS SIDE SHOWN	T	THERMOSTAT
(12"x12")	BELOW DUCT SIZE: FIRST FIGURE IS SIDE SHOWN	RH	SPACE HUMIDITY SENSOR
	DIRECTION OF FLOW-RETURN	RH	DUCT HUMIDITY SENSOR
	DIRECTION OF FLOW-SUPPLY	SP	STATIC PRESSURE SENSOR
FD	FIRE DAMPER	CD	CONDENSATE PIPING
8"Ø	FLEXIBLE DUCT	8"Ø	HARD DUCT
EG-X cfm	EXHAUST AIR GRILLE	RA MD OA	OUTSIDE AIR DUCT WITH MOTORIZED DAMPER AND MANUAL DAMPER
RG-X/TG-X cfm	RETURN AIR/TRANSFER AIR GRILLE	SA	SIDE TAP WITH MANUAL DAMPER
SD-X cfm	SUPPLY AIR DIFFUSER		BACKDRAFT DAMPER

ABBREVIATIONS

A	AMPS	CU	CONDENSING UNIT	FCU	FAN COIL UNIT
ACT	ACTUATOR	CU.	COPPER	FD	FLOOR DRAIN OR FIRE DAMPER
A.F.F.	ABOVE FINISHED FLOOR	DDC	DIRECT DIGITAL CONTROLS	FM	FLOW METER
B.	BOTTOM	DMPR.	DAMPER	FS	FLOW SWITCH
BOP	BOTTOM OF PIPE	DISC.	DISCONNECT	FPI	FINS PER INCH
BOTT.	BOTTOM	DX	DIRECT EXPANSION COOLING	G.	GROUND
C.	CONDUIT OR COMMON	EAG	EXHAUST AIR GRILLE	GA.	GAGE
CLG.	CEILING OR COOLING	EF	EXHAUST FAN	GALV.	GALVANIZED
COMB.	COMBINATION	EMS	ENERGY MANAGEMENT SYSTEM	GRND.	GROUND
CONC.	CONCRETE	ENT.	ENTERING	HP	HORSEPOWER
COND.	CONDUIT	EXT.	EXTERNAL OR EXTERIOR	HS	HUMIDITY SENSOR
HVAC	HEAT., VENT., & AIR CONDITION.	SA	SUPPLY AIR	N.T.S.	NOT TO SCALE
LCU	LOCAL CONTROL UNIT	SD	SUPPLY DIFFUSER	OA	OUTSIDE AIR
LVG.	LEAVING	SS	STAINLESS STEEL	PCU	PRIMARY CONTROL UNIT
MECH	MECHANICAL	SZ	SINGLE ZONE	PH	PHASE
MOT. STRTR.	MOTOR STARTER	TAB	TESTING & BALANCING	RA	RETURN AIR
MS	MOTOR STARTER	TS	TEMPERATURE SENSOR	RG	RETURN GRILLE
OA	OUTSIDE AIR	TSTAT	THERMOSTAT	V	VOLTS
RD	ROOF DRAIN	UG	UNDERGROUND	VAV	VARIABLE AIR VOLUME
RM.	ROOM	MD	MOTORIZED DAMPER	VFD	VARIABLE FREQUENCY DRIVE
RPZ	REDUCED PRESSURE ZONE	NC	NORMALLY CLOSED	W	WIRE
RTU	ROOFTOP UNIT	NO	NORMALLY OPEN		

2 ADD

COB Animal Shelter HVAC Upgrades – Proposed Sequences of Construction

PHASE	HVAC ZONE	NAME	SCOPE OF WORK	EXISTING SYSTEM / AHU DEMO'D	REMARKS
1		ELECTRICAL INFRASTRUCTURE	PROVIDE NEW 480V, 3-PHASE ELECTRICAL SERVICE FROM UTILITY TO SITE. INSTALL PRIMARY CONDUITS, TRANSFORMER, AND DISTRIBUTION EQUIPMENT.	NONE	COORDINATE WITH BPUB. REQUIRED PRIOR TO CENTRAL PLANT STARTUP
2		CENTRAL PLANT CONSTRUCTION	CONSTRUCT CENTRAL PLANT INCLUDING ELECTRICAL, CHILLERS, PUMPS, PIPING HEADERS, CONTROLS, AND CHEMICAL TREATMENT SYSTEMS.	NONE	CENTRAL PLANT SHALL BE FULLY OPERATIONAL PRIOR TO BUILDING CONNECTIONS.
3		UNDERGROUND CHILLED WATER DISTRIBUTION	INSTALL UNDERGROUND ELECTRICAL, CHILLED WATER SUPPLY AND RETURN PIPING FROM CENTRAL PLANT TO BUILDING.	NONE	PRESSURE TEST PRIOR TO BACKFILL. MAINTAIN SITE ACCESS.
4		BUILDING VERTICAL DISTRIBUTION & ROOF TIE-INS	EXTEND CHILLED WATER PIPING INTO BUILDING AND UP TO ROOF LEVEL INCLUDING RISERS, SUPPORTS, INSULATION, AND ROOF PENETRATIONS. INSTALL 480V ELECTRICAL BRANCH CIRCUITS FROM NEW DISTRUBTION PANEL UP TO ROOF LEVEL. INSTALL 480V DISTRIBUTION PANEL, STEP-DOWN TRANSFORMERS AND RE-FEED EXISTING 208V PANELBOARDS.	NONE	PREPARE SYSTEM FOR PHASED CONNECTION TO HVAC EQUIPMENT.
5	ERV-3	ISOLATION VENTILATION UPGRADE	INSTALL NEW ERV SYSTEM, DUCTWORK, AND CONTROLS FOR ISOLATION AREAS.	EXISTING ERV-3 AND ASSOCIATED EXHAUST SYSTEMS	
6	ERV-1	KENNEL VENTILATION UPGRADE	INSTALL NEW VENTILATION SYSTEMS SERVING KENNEL AREAS.	EXISTING ERV-1 AND ASSOCIATED EXHAUST SYSTEMS	MAINTAIN CONTINUOUS AIRFLOW FOR ANIMAL AREAS.
7	ERV-2	ADOPTION VENTILATION UPGRADE	INSTALL NEW VENTILATION SYSTEMS SERVING ADOPTION AND SUPPORT AREAS.	EXISTING ERV-2 AND ASSOCIATED EXHAUST SYSTEMS	COORDINATE WITH ADJACENT HVAC WORK.
8	RTU-3 / RTU-4	CAT AREAS & CORRIDOR HVAC CONVERSION (RTU-3 & RTU-4 COMBINED)	INSTALL NEW SHARED AIR HANDLING SYSTEM, CONNECT TO CHILLED WATER, INSTALL DUCTWORK AND CONTROLS.	EXISTING RTU-3, RTU-4 AND ASSOCIATED DUCTWORK AND EXHAUST SYSTEMS	FIRST MAJOR COOLING ZONE. ESTABLISHES HVAC BACKBONE FOR FACILITY.
9	RTU-2	ADMINISTRATIVE AREAS HVAC UPGRADE	DEMOLISH EXISTING SYSTEMS AND INSTALL NEW HVAC EQUIPMENT, DUCTWORK, AND CONTROLS.	EXISTING RTU-2 AND ASSOCIATED EXHAUST SYSTEMS	COORDINATE WITH STAFF OPERATIONS.
10	RTU-1	PUBLIC & LOBBY AREAS HVAC UPGRADE	DEMOLISH EXISTING SYSTEMS AND INSTALL NEW HVAC EQUIPMENT, DUCTWORK, AND CONTROLS. DISCONNECT AND REMOVE 208V DISTRIBUTION PANEL AND ASSOCIATED BPUB TRANSFORMER.	EXISTING RTU-1 AND ASSOCIATED EXHAUST SYSTEMS	PUBLIC-FACING AREA. MINIMIZE DISRUPTION.
11	RTU-ADDITION	VETERINARY ADDITION HVAC INSTALLATION	INSTALL NEW HVAC SYSTEMS FOR VETERINARY ADDITION INCLUDING EQUIPMENT, DUCTWORK, AND CONTROLS.	NONE	
12		SYSTEMS INTEGRATION, TAB & COMMISSIONING	PERFORM TESTING, ADJUSTING, AND BALANCING. INTEGRATE SYSTEMS INTO CONTROLS AND VERIFY SEQUENCES OF OPERATION.	NONE	PERFORM IN PHASES WITH FINAL GLOBAL COMMISSIONING.
13		FINAL TIE-INS & PROJECT CLOSEOUT	COMPLETE FINAL SYSTEM TIE-INS, REMOVE TEMPORARY SYSTEMS, AND FINALIZE PROJECT CLOSEOUT.	REMAINING ABANDONED SYSTEMS	ENSURE FULL OPERATION PRIOR TO FINAL SHUTDOWNS.

NOTE:

1. THIS SEQUENCING TABLE IS PROVIDED FOR GENERAL REFERENCE ONLY AND IS NOT INTENDED TO BE A COMPREHENSIVE LIST OF ALL SYSTEMS, EQUIPMENT, MATERIALS, OR WORK REQUIRED FOR THE PROJECT. THIS TABLE SHALL NOT BE USED BY THE CONTRACTOR AS THE BASIS FOR THE FINAL CONSTRUCTION SCHEDULE.
2. THE INTENT OF THIS TABLE IS TO CONVEY THE GENERAL APPROACH AND LOGICAL ORDER OF CONSTRUCTION TO ASSIST BIDDERS IN UNDERSTANDING THE PROJECT PHASING AND ASSOCIATED COMPLEXITIES. THE CONTRACTOR SHALL BE SOLELY RESPONSIBLE FOR DEVELOPING A COMPLETE, DETAILED, AND ALL-INCLUSIVE CONSTRUCTION SCHEDULE AFTER AWARD OF THE PROJECT.
3. THE CONTRACTOR'S SCHEDULE SHALL ACCOUNT FOR ALL WORK, COORDINATION, PROCUREMENT, PHASING, TEMPORARY SYSTEMS, AND OWNER OPERATIONS AS REQUIRED TO SUCCESSFULLY COMPLETE THE PROJECT. THE INFORMATION PROVIDED HEREIN IS INTENDED TO ASSIST THE CONTRACTOR IN EVALUATING PROJECT DURATION AND INCORPORATING SUCH CONSIDERATIONS INTO THEIR BID PRICE.

NO:	REVISION:	BY:
1 ADD	04/17/2026	ETHOS
2 ADD	04/27/2026	ETHOS

COPY NO:

HVAC UPGRADES AT BROWNSVILLE ANIMAL REGULATION AND CARE FACILITY

OLMITO, TEXAS

F.M. 511

ethos engineering
1126 SOUTH COMMERCE ST.
HARLINGEN, TX
PHONE: 956-230-3435
TEXAS REGISTERED
ENGINEERING FIRM
F-15998

DATE: MARCH 23. 2026
CHECKED BY: C.A.G.
DRAWN BY: P.M.
PROJECT NO.: 24v67
CAD FILE: -
SHEET: M1.0

ELECTRICAL KEYED NOTES:

1. APPROXIMATE LOCATION OF NEW PANELBOARD SERVING NEW HVAC EQUIPMENT.
2. APPROXIMATE LOCATION OF NEW PANELBOARD SERVING NEW EF.
3. CONNECT NEW EF. RETAIN AND REUSE EXISTING BRANCH CIRCUIT.
4. CONNECT DDC PANELS TO NEW PANEL "C"; BRANCH CIRCUIT: 1/2" – 2#12 & #12G.
5. CONNECT NEW EF. SEE EXHAUST FAN CONNECTION SCHEDULE.
6. CONNECT NEW HVAC EQUIPMENT. SEE CONNECTION SCHEDULE.

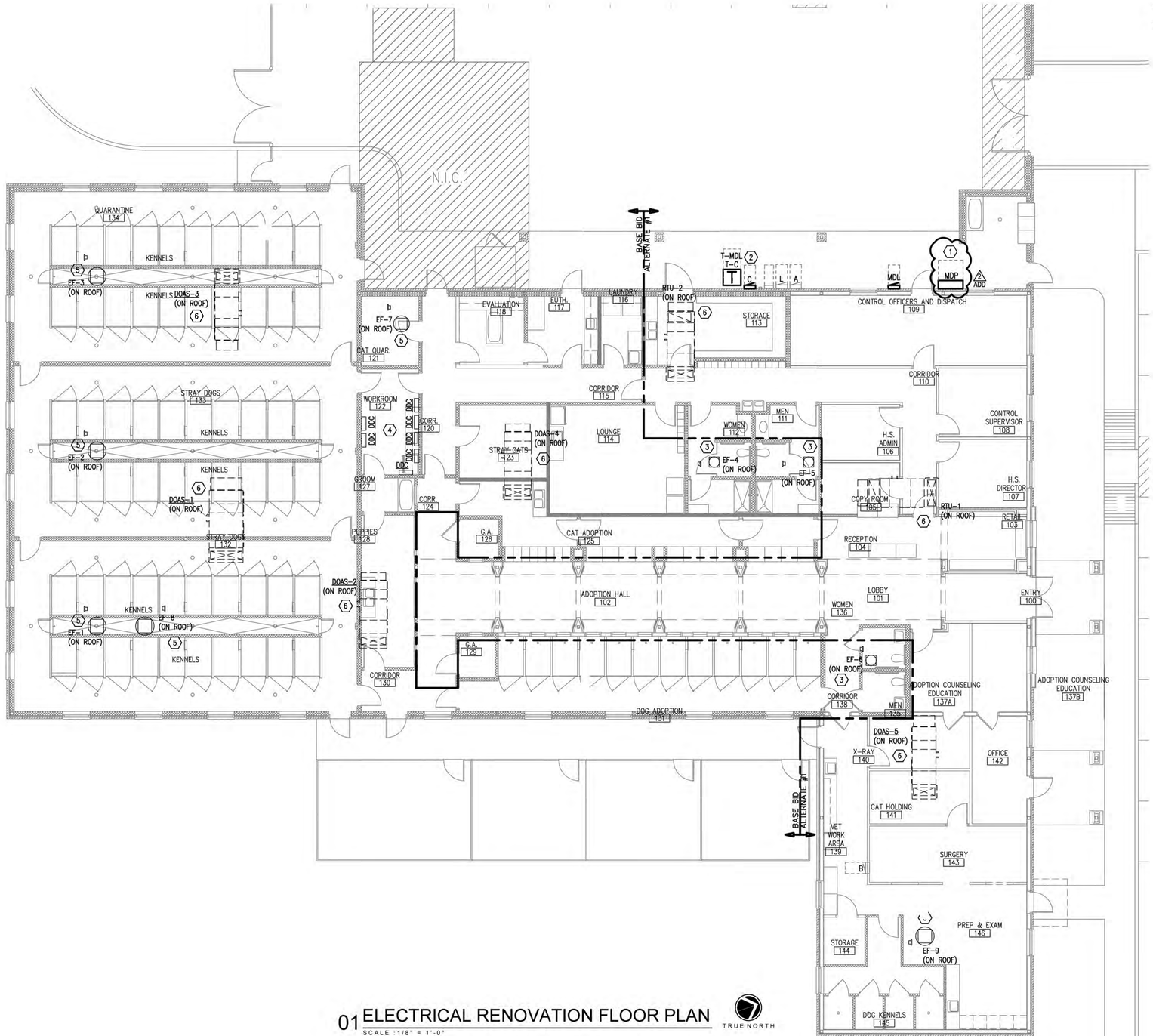

01 ELECTRICAL RENOVATION FLOOR PLAN
SCALE : 1/8" = 1'-0"

NO:	REVISION:	BY:
1 ADD	04/17/2026	ETHOS
2 ADD	04/27/2026	ETHOS

COPY NO:

STATE OF TEXAS
CESAR A. GONZALEZ
108611
LICENSED PROFESSIONAL ENGINEER
03.23.2026

HVAC UPGRADES AT BROWNSVILLE ANIMAL REGULATION AND CARE FACILITY

OLMITO, TEXAS

F.M. 511

ethos engineering
1126 SOUTH COMMERCE ST.
HARLINGEN, TX
PHONE: 956-230-3435
TEXAS REGISTERED ENGINEERING FIRM F-15598

DATE: MARCH 23. 2026
CHECKED BY: C.A.G.
DRAWN BY: C.G.
PROJECT NO.: 24v67
CAD FILE: -
SHEET: E3.1

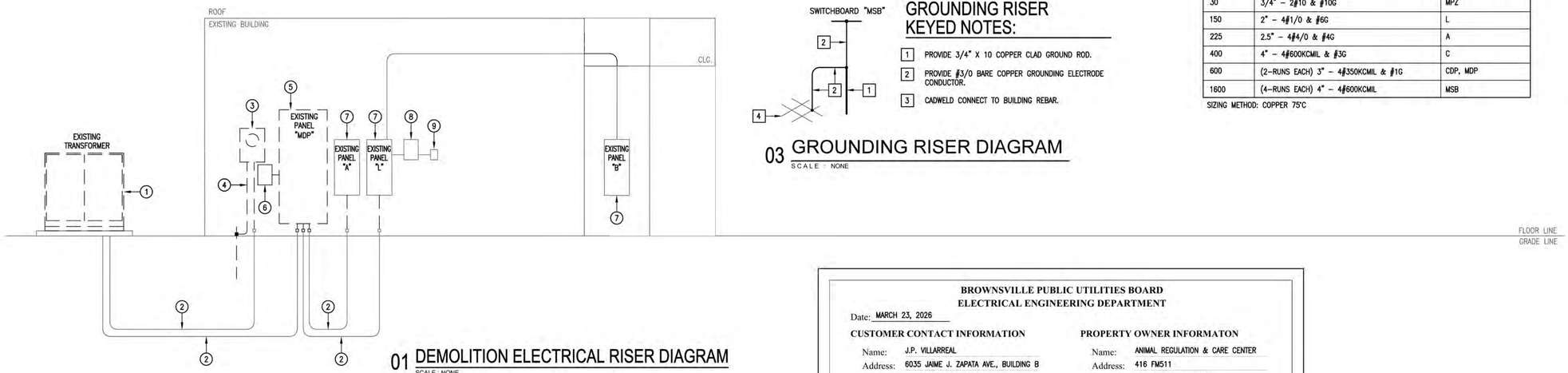

01 DEMOLITION ELECTRICAL RISER DIAGRAM

SCALE : NONE

GROUNDING RISER KEYED NOTES:

1. PROVIDE 3/4" X 10 COPPER CLAD GROUND ROD.
2. PROVIDE #3/0 BARE COPPER GROUNDING ELECTRODE CONDUCTOR.
3. CADWELD CONNECT TO BUILDING REBAR.

03 GROUNDING RISER DIAGRAM

SCALE : NONE

FEEDER SCHEDULE:

FEEDER AMPS	CONDUIT AND FEEDER	FEEDING THESE DEVICES
30	3/4" – 2#10 & #10G	MPZ
150	2" – 4#1/0 & #6G	L
225	2.5" – 4#4/0 & #4G	A
400	4" – 4#600KCMIL & #3G	C
600	(2–RUNS EACH) 3" – 4#350KCMIL & #1G	CDP, MDP
1600	(4–RUNS EACH) 4" – 4#600KCMIL	MSB

SIZING METHOD: COPPER 75°C

KEYED NOTES:

1. EXISTING ELECTRIC UTILITY PAD MOUNT TRANSFORMER. COORDINATE REMOVAL WITH BPUB.
2. DISCONNECT AND REMOVE EXISTING PANELBOARD FEEDER. ABANDON RACEWAY IN PLACE AND CAP.
3. DISCONNECT AND REMOVE EXISTING ELECTRIC UTILITY METER ALONG WITH RELATED WIRING, RACEWAY, AND SUPPORT HARDWARE.
4. DISCONNECT AND REMOVE EXISTING GROUNDING ALONG WITH RELATED WIRING, RACEWAY AND SUPPORT HARDWARE.
5. DISCONNECT AND REMOVE EXISTING PANELBOARD ALONG WITH RELATED WIRING, RACEWAY AND SUPPORT HARDWARE. TEMPORARILY DISCONNECT EXISTING BRANCH CIRCUITS TO REMAIN.
6. DISCONNECT AND REMOVE EXISTING SPD ALONG WITH RELATED WIRING, RACEWAY AND SUPPORT HARDWARE.
7. EXISTING PANELBOARD TO REMAIN AS IS.
8. EXISTING LIGHTING CONTACTOR TO REMAIN AS IS.
9. EXISTING TIME CLOCK TO REMAIN AS IS.

MSB

ROOM CENTRAL PLANT — VOLTS 480Y/277V 3P 4W — AIC 65,000
MOUNTING FLOOR — BUS AMPS 1600 — MAIN BKR MLO
FED FROM UTILITY — NEUTRAL 100% — LUGS STANDARD
NOTE PROVIDE PHENOLIC CIRCUIT BREAKER IDENTIFICATION NAMETAGS PER SPECIFICATIONS.

CKT #	BREAKER TRIP/POLES	CIRCUIT DESCRIPTION	LOAD KVA A	B	C	FEEDER RACEWAY AND CONDUCTORS
1	600/3	PANEL CDP	86.5	86.5	86.1	SEE FEEDER SCHEDULE
2	600/3	PANEL MDP	125	124	124	SEE FEEDER SCHEDULE
3	400/3	SPARE	0	0	0	–
		TOTAL CONNECTED KVA BY PHASE	212	211	210	

	CONN KVA	CALC KVA			CONN KVA	CALC KVA	
LIGHTING	0.395	0.494	(125%)	CONTINUOUS	1.37	1.72	(125%)
LARGEST MOTOR	120	30	(25%)	HEATING	235	0	(0%)
MOTORS	50.8	50.8	(100%)	COOLING	240	240	(100%)
RECEPTACLES	0.36	0.36	(50%>10)	DIVERSE	104	104	(100%)
				TOTAL LOAD		428	
				BALANCED 3–PHASE LOAD		515 A	

NOTES:
1. PROVIDE NEMA 4X SS OUTDOOR ENCLOSURE.
2. PROVIDE INTEGRAL MOUNTED 200KA "SPD".
3. PROVIDE INTEGRAL DIGITAL MULTI–METER.
4. PROVIDE A MIMIC BUS.
5. LABEL EACH BREAKER WITH AN ENGRAVED NAMEPLATE.
6. PROVIDE SWITCHBOARD SERVICE ENTRANCE RATED.
7. PROVIDE BRANCH CIRCUIT BREAKERS THERMAL MAGNETIC TYPE.
8. PROVIDE SWITCHBOARD TO COMPLY WITH 2020 NEC 230.71(B).

BROWNSVILLE PUBLIC UTILITIES BOARD
ELECTRICAL ENGINEERING DEPARTMENT

Date: MARCH 23, 2026

CUSTOMER CONTACT INFORMATION

Name: J.P. VILLARREAL
Address: 6035 JAIME J. ZAPATA AVE., BUILDING B
BROWNSVILLE, TX 78520
Phone: (956) 589–0567
Fax:
Signed:

PROPERTY OWNER INFORMATON

Name: ANIMAL REGULATION & CARE CENTER
Address: 416 FM511
BROWNSVILLE, TX 78575
Phone: (956) 544–7351
Fax:
Signed:

PROPERTY INFORMATION

Street Address: 416 FM511
Legal Description: Lot ____ Block ____ Subdivision ____
Construction Type: ☐ New Construction ☒ Addition

POWER REQUIREMENTS (Connecting Loads)

Voltage: ☐ 120/240 1-Phase ☐ 120/240 3-Phase ☐ 240/480 1-Phase ☐ 240/480 3-Phase ☐ 120/208 3-Phase ☒ 277/480 3-Phase ☐ 7200/12470 3-Phase
Current: ☐ 100 AMP ☐ 200 AMP ☐ 400 AMP ☒ 1,600 AMP *
* Services above 400 AMP will require current transformers (CT).

Load:	1-Phase	3-Phase
Lighting	6.0 KW	KW
Receptacles	36.0 KW	KW
HVAC	KW	309.6 KW
Motors/Machines	5.1 HP	34.3 HP
Others	KW	138.9 KW

Total Estimated KW Demand 490.5

TEMPORARY POWER NEEDED Month____ Day____ Year____
PERMANENT POWER NEEDED Month____ Day____ Year____

IMPORTANT TELEPHONE NUMBERS

BPUB Electrical Engineering..... (956) 983-6201
BPUB Customer Service..... (956) 983-6121

NOTES:
1. Aluminum meter sockets required (Effective 7/1/07)

IMPORTANT: If BPUB requests additional information or a response, the customer must comply within **20 business days**. Failure to respond or submit the requested information will result in the request being closed and requiring resubmittal.

Email to BPUB Electrical Engineering Department to nvasquez@brownsville-pub.com

BROWNSVILLE PUBLIC UTILITIES BOARD

CUSTOMER CHECKLIST

DEVELOPED BY:	ELECTRICAL ENGINEERING
APPROVED:	03/13/2026
DRAWING NUMBER	ENG-1

KEYED NOTES:

1. PROVIDE NEW ELECTRIC UTILITY PAD MOUNT TRANSFORMER CONCRETE PAD – SEE DETAIL.
2. PROVIDE NEW FEEDER.
3. PROVIDE NEW ELECTRIC UTILITY SERVICE METER 277/480V, 3ø, 4W.
4. SEE GROUNDING RISER DIAGRAM – TYPICAL.
5. PROVIDE NEW PANELBOARD. RECONNECT EXISTING BRANCH CIRCUITS AND CONNECT NEW BRANCH CIRCUITS.
6. PROVIDE 100KA, 277/480V, 3ø, 4W, SPD SQUARE "D" MODEL NO. HWA41.
7. EXISTING PANELBOARD TO REMAIN AS IS.
8. EXISTING LIGHTING CONTACTOR TO REMAIN AS IS.
9. EXISTING TIME CLOCK TO REMAIN AS IS.
10. PROVIDE NEW PANELBOARD.
11. EXISTING ELECTRIC UTILITY 3ø OVERHEAD SERVICE LINES.
12. EXISTING ELECTRIC UTILITY POWER POLE.
13. PROPOSED NEW ELECTRIC UTILITY 3ø OVERHEAD SERVICE LINES.
14. PROPOSED NEW ELECTRIC UTILITY POWER POLE WITH RISER DIP POLE.
15. PROVIDE (2) 4" NEW UNDERGROUND PRIMARY ELECTRIC CONDUITS WITH PULLWIRE. CONDUCTORS PROVIDED BY ELECTRICAL UTILITY COMPANY.
16. PROVIDE CONTINUOUS DETECTABLE UNDERGROUND WARNING TAPE.
17. PROVIDE 2" RACEWAY.
18. PROVIDE 4" HOUSEKEEPING CONCRETE PAD – TYPICAL.
19. PROVIDE SWITCHBOARD HOUSEKEEPING CONCRETE PAD. SEE STRUCTURAL DRAWINGS.
20. PROVIDE 4–4" RACEWAYS WITH PULLWIRE FOR FUTURE USE.
21. PROVIDE #6 BARE COPPER GROUNDING ELECTRODE CONDUCTOR AND 3/4" X 10 COPPER CLAD GROUND ROD.
22. OMIT IF ALTERNATE #1 IS ACCEPTED.

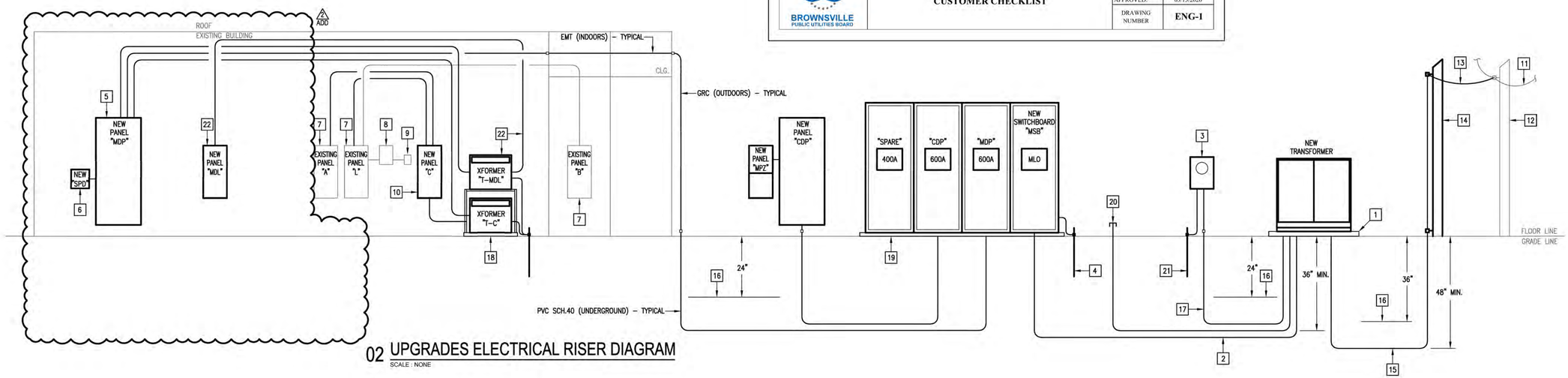

02 UPGRADES ELECTRICAL RISER DIAGRAM

SCALE : NONE

NO:	REVISION:	BY:
1 ADD	04/17/2026	ETHOS
2 ADD	04/27/2026	ETHOS

COPY NO:

STATE OF TEXAS
CESAR A. GONZALEZ
108611
LICENSED
PROFESSIONAL ENGINEER
03.23.2026

HVAC UPGRADES AT BROWNSVILLE ANIMAL REGULATION AND CARE FACILITY

OLMITO, TEXAS

F.M. 511

ethos engineering
1126 SOUTH COMMERCE ST.
HARLINGEN, TX
PHONE: 956-230-3435
TEXAS REGISTERED ENGINEERING FIRM
F-15998

DATE:	MARCH 23. 2026
CHECKED BY:	C.A.G.
DRAWN BY:	C.G.
PROJECT NO.:	24v67
CAD FILE:	-
SHEET:	E4.1

EQUIPMENT CONNECTION SCHEDULE:

	DESIGN	HP/KW	FLA	MCA	MOCP	VOLTAGE	DISCONNECT	60/75° COPPER BRANCH CIRCUIT
	CH-1	–	–	207	250	480V/3PHASE	400A, 3PNF, 600V, NEMA 4X SS	2.5" – 3#250KCMIL & #4G
	CH-2	–	–	207	250	480V/3PHASE	400A, 3PNF, 600V, NEMA 4X SS	2.5" – 3#250KCMIL & #4G
	SCHWP-1	7.5 HP	11	13.7	30	480V/3PHASE	1) VARIABLE FREQUENCY DRIVE	3/4" – 3#10 & #10G
	SCHWP-2	7.5 HP	11	13.7	30	480V/3PHASE	1) VARIABLE FREQUENCY DRIVE	3/4" – 3#10 & #10G
ALTERNATE #1	DOAS-1 (MOTOR)	2 X 2.3 HP	2 X 2.8	6.3	15	480V/3PHASE	30A, 3PNF, 600V, NEMA 4X SS	3/4" – 3#12 & #12G
ALTERNATE #1	DOAS-1 (HEAT)	65 KW	78.1	–	100	480V/3PHASE	100A, 3PNF, 600V, NEMA 4X SS	1.25" – 3#1 & #8G
ALTERNATE #1	DOAS-2 (MOTOR)	2.3 HP	2.8	3.5	15	480V/3PHASE	30A, 3PNF, 600V, NEMA 4X SS	3/4" – 3#12 & #12G
ALTERNATE #1	DOAS-2 (HEAT)	25 KW	30	–	40	480V/3PHASE	60A, 3PNF, 600V, NEMA 4X SS	3/4" – 3#8 & #10G
	DOAS-3 (MOTOR)	2.3 HP	2.8	3.5	15	480V/3PHASE	30A, 3PNF, 600V, NEMA 4X SS	3/4" – 3#12 & #12G
	DOAS-3 (HEAT)	30 KW	36	–	50	480V/3PHASE	60A, 3PNF, 600V, NEMA 4X SS	3/4" – 3#6 & #10G
	DOAS-4 (MOTOR)	2.3 HP	2.8	3.5	15	480V/3PHASE	30A, 3PNF, 600V, NEMA 4X SS	3/4" – 3#12 & #12G
	DOAS-4 (HEAT)	25 KW	30	–	40	480V/3PHASE	60A, 3PNF, 600V, NEMA 4X SS	3/4" – 3#8 & #10G
ALTERNATE #1	DOAS-5 (MOTOR)	2.3 HP	2.8	3.5	15	480V/3PHASE	30A, 3PNF, 600V, NEMA 4X SS	3/4" – 3#12 & #12G
ALTERNATE #1	DOAS-5 (HEAT)	35 KW	42	–	60	480V/3PHASE	60A, 3PNF, 600V, NEMA 4X SS	1" – 3#4 & #10G
	RTU-1 (MOTOR)	3.27 HP	3.9	4.9	15	480V/3PHASE	30A, 3PNF, 600V, NEMA 4X SS	3/4" – 3#12 & #12G
	RTU-1 (HEAT)	30 KW	36	–	50	480V/3PHASE	60A, 3PNF, 600V, NEMA 4X SS	3/4" – 3#6 & #10G
	RTU-2 (MOTOR)	2.3 HP	2.8	3.5	15	480V/3PHASE	30A, 3PNF, 600V, NEMA 4X SS	3/4" – 3#12 & #12G
	RTU-2 (HEAT)	25 KW	30	–	40	480V/3PHASE	60A, 3PNF, 600V, NEMA 4X SS	3/4" – 3#8 & #10G
	RTU-1	22.5 KW	30	–	80	480V/3PHASE	RETAIN EXISTING	2) 1" – 3#4 & #8G
	RTU-2	22.5 KW	30	–	80	480V/3PHASE	RETAIN EXISTING	2) 1" – 3#4 & #8G
	EX-RTU-ADDITION	22.5 KW	30	–	80	480V/3PHASE	RETAIN EXISTING	2) 1.25" – 3#3 & #8G

NOTES:
1) PROVIDED BY DIV. 23. INSTALLED AND CONNECTED BY DIV. 26.
2) INTERCEPT EXISTING BRANCH CIRCUIT AND EXTEND TO NEW PANELBOARD "MDL". OMIT IF ALTERNATE #1 IS ACCEPTED.

EXHAUST FAN CONNECTION SCHEDULE:

DESIGN	HP	MCA	MOCP	VOLTAGE	DISCONNECT	CONNECTION	60° COPPER BRANCH CIRCUIT	POWER SOURCE (PANEL)
EF-1	1 HP	16.0	40	120V/1PHASE	INTEGRAL DISCONNECT	CONNECT AT ROOF. INTERLOCKING BY HVAC CONTROLS CONTRACTOR.	3/4" – 2#8 & #10G	C
EF-2	1 HP	16.0	40	120V/1PHASE	INTEGRAL DISCONNECT	CONNECT AT ROOF. INTERLOCKING BY HVAC CONTROLS CONTRACTOR.	3/4" – 2#8 & #10G	C
EF-3	5/8 HP	7.2	25	120V/1PHASE	INTEGRAL DISCONNECT	CONNECT AT ROOF. INTERLOCKING BY HVAC CONTROLS CONTRACTOR.	3/4" – 2#8 & #10G	C
EF-4	1/6 HP	4.4	20	120V/1PHASE	INTEGRAL DISCONNECT	CONNECT AT ROOF. INTERLOCK SWITCHING W/LIGHTING OCCUPANCY SENSOR. INTERLOCKING BY HVAC CONTROLS CONTRACTOR.	1) 1/2" – 2#12 & #12G	A
EF-5	1/6 HP	4.4	20	120V/1PHASE	INTEGRAL DISCONNECT	CONNECT AT ROOF. INTERLOCK SWITCHING W/LIGHTING OCCUPANCY SENSOR. INTERLOCKING BY HVAC CONTROLS CONTRACTOR.	1) 1/2" – 2#12 & #12G	A
EF-6	1/6 HP	4.4	20	120V/1PHASE	INTEGRAL DISCONNECT	CONNECT AT ROOF. INTERLOCK SWITCHING W/LIGHTING OCCUPANCY SENSOR. INTERLOCKING BY HVAC CONTROLS CONTRACTOR.	1) 1/2" – 2#12 & #12G	A
EF-7	1/2 HP	9.8	25	120V/1PHASE	INTEGRAL DISCONNECT	CONNECT AT ROOF. INTERLOCKING BY HVAC CONTROLS CONTRACTOR.	3/4" – 2#10 & #10G	C
EF-8	3/4 HP	13.8	35	120V/1PHASE	INTEGRAL DISCONNECT	CONNECT AT ROOF. INTERLOCKING BY HVAC CONTROLS CONTRACTOR.	3/4" – 2#8 & #10G	C
EF-9	3/4 HP	13.8	35	120V/1PHASE	INTEGRAL DISCONNECT	CONNECT AT ROOF. INTERLOCKING BY HVAC CONTROLS CONTRACTOR.	3/4" – 2#8 & #10G	C

NOTES:
1) RETAIN AND REUSE EXISTING. IF EXISTING BRANCH CIRCUIT DOES NOT REACH NEW POINT OF CONNECTION PROVIDE A J-BOX TO SPLICE AND EXTEND.

TRANSFORMER SCHEDULE:

DESIGN	KVA	PV	SV	DEGREE RISE	CONNECTION	FREQ HZ	SERVES PANELS	CAT. NO.	PRIMARY FEEDER (75°C COPPER)	NOTES
T-C	112.5	480	120/208	115	DELTA Y	60	C	SQUARE "D": EXN112T3155H	2" – 3#3/0 & #6G	1
T-MDL	112.5	480	120/208	115	DELTA Y	60	MDL	SQUARE "D": EXN112T3155H	2" – 3#3/0 & #6G	1,2

NOTES:
1) PROVIDE A WEATHER SHIELD.
2) IF ALTERNATE #1 IS ACCEPTED OMIT TRANSFORMER.

MDP

ROOM OUTDOORS — VOLTS 480Y/277V 3P 4W — AIC 35,000
MOUNTING SURFACE — BUS AMPS 600 — MAIN BKR 600
FED FROM MSB — NEUTRAL 100% — LUGS STANDARD
NOTE PROVIDE A TYPE WRITTEN AS BUILT DIRECTORY THAT INCLUDES ROOM NUMBERS.

CKT #	CKT BKR	CIRCUIT DESCRIPTION	LOAD KVA A	LOAD KVA B	LOAD KVA C	CKT #	CKT BKR	CIRCUIT DESCRIPTION	LOAD KVA A	LOAD KVA B	LOAD KVA C
1	15/3	DOAS-1	1.08			2	100/3	DOAS-1 HEAT	21.7		
3	|			1.08		4	|			21.7	
5	|				1.08	6	|				21.7
7	15/3	DOAS-2	1.06			8	40/3	DOAS-2 HEAT	8.33		
9	|			1.06		10	|			8.33	
11	|				1.06	12	|				8.33
13	15/3	DOAS-3	1.06			14	50/3	DOAS-3 HEAT	10		
15	|			1.06		16	|			10	
17	|				1.06	18	|				10
19	15/3	DOAS-4	1.06			20	40/3	DOAS-4 HEAT	8.33		
21	|			1.06		22	|			8.33	
23	|				1.06	24	|				8.33
25	15/3	DOAS-5	1.06			26	60/3	DOAS-5 HEAT	11.7		
27	|			1.06		28	|			11.7	
29	|				1.06	30	|				11.7
31	15/3	RTU-1	1.06			32	50/3	RTU-1 HEAT	10		
33	|			1.06		34	|			10	
35	|				1.06	36	|				10
37	15/3	RTU-2	1.06			38	40/3	RTU-2 HEAT	8.33		
39	|			1.06		40	|			8.33	
41	|				1.06	42	|				8.33
43	200/3	*XFMR T-C	39.2			44	200/3	*XFMR T-MDL	0		
45	|			38.4		46	|			0	
47	|				38.4	48	|				0
49	20/1	SPACE	0			50	20/1	SPACE	0		
51	20/1	SPACE		0		52	20/1	SPACE		0	
53	20/1	SPACE			0	54	20/1	SPACE			0
								TOTAL CONNECTED KVA BY PHASE	125	124	124

	CONN KVA	CALC KVA			CONN KVA	CALC KVA	
LARGEST MOTOR	3.17	0.793	(25%)	CONTINUOUS	1.34	1.68	(125%)
MOTORS	32.5	32.5	(100%)	HEATING	235	235	(100%)
				DIVERSE	104	104	(100%)
				TOTAL LOAD		374	
				BALANCED 3-PHASE LOAD		450 A	

1. PROVIDE A NEMA 4X SS OUTDOOR ENCLOSURE.

*PROVIDE LOCK SAFE ELECTRONIC TYPE BREAKER WITH L.S.I. DIALS. ADD

CDP

ROOM CENTRAL PLANT — VOLTS 480Y/277V 3P 4W — AIC 35,000
MOUNTING SURFACE — BUS AMPS 600 — MAIN BKR 600
FED FROM MSB — NEUTRAL 100% — LUGS STANDARD
NOTE PROVIDE PHENOLIC CIRCUIT BREAKER IDENTIFICATION NAMETAGS PER SPECIFICATIONS.

CKT #	CKT BKR	CIRCUIT DESCRIPTION	LOAD KVA A	LOAD KVA B	LOAD KVA C	CKT #	CKT BKR	CIRCUIT DESCRIPTION	LOAD KVA A	LOAD KVA B	LOAD KVA C
1	30/3	(7.5HP) SCHWP-1	3.05			2	30/3	(7.5HP) SCHWP-2	3.05		
3	|			3.05		4	|			3.05	
5	|				3.05	6	|				3.05
7	20/3	SPACE	0			8	20/3	SPACE	0		
9	|			0		10	|			0	
11	|				0	12	|				0
13	250/3	CH-1	40			14	250/3	CH-2	40		
15	|			40		16	|			40	
17	|				40	18	|				40
19	20/3	SPACE	0			20	30/2	*PANEL MPZ	0.425		
21	|			0		22	|			0.36	
23	|				0	24	20/1	SPACE			0
								TOTAL CONNECTED KVA BY PHASE	86.5	86.5	86.1

	CONN KVA	CALC KVA			CONN KVA	CALC KVA	
LIGHTING	0.395	0.494	(125%)	RECEPTACLES	0.36	0.36	(50%>10)
LARGEST MOTOR	120	30	(25%)	CONTINUOUS	0.03	0.038	(125%)
MOTORS	18.3	18.3	(100%)	COOLING	240	240	(100%)
				TOTAL LOAD		289	
				BALANCED 3-PHASE LOAD		348 A	

1. PROVIDE A NEMA 4X SS OUTDOOR ENCLOSURE.

*PROVIDE ELECTRONIC TYPE WITH L.S.I. DIALS.

MDL

ROOM OUTDOORS — VOLTS 208Y/120V 3P 4W — AIC 10,000
MOUNTING SURFACE — BUS AMPS 400 — MAIN BKR 300
FED FROM T-MDL — NEUTRAL 100% — LUGS STANDARD
NOTE PROVIDE A TYPE WRITTEN AS BUILT DIRECTORY.

CKT #	CKT BKR	CIRCUIT DESCRIPTION	LOAD KVA A	LOAD KVA B	LOAD KVA C	CKT #	CKT BKR	CIRCUIT DESCRIPTION	LOAD KVA A	LOAD KVA B	LOAD KVA C
1	80/3	RTU-1	8.44			2	80/3	RTU-2	8.44		
3	|			8.44		4	|			8.44	
5	|				8.44	6	|				8.44
7	20/1	SPACE	0			8	100/3	EX-RTU-ADMIN	8.83		
9	20/1	SPACE		0		10	|			8.83	
11	20/1	SPACE			0	12	|				8.83
13	20/1	SPACE	0			14	20/1	SPACE	0		
15	20/1	SPACE		0		16	20/1	SPACE		0	
17	20/1	SPACE			0	18	20/1	SPACE			0
								TOTAL CONNECTED KVA BY PHASE	25.7	25.7	25.7

	CONN KVA	CALC KVA			CALC KVA
LARGEST MOTOR	3.99	0.998	(25%)	TOTAL LOAD	78.1
HEATING	77.1	77.1	(100%)	BALANCED 3-PHASE LOAD	217 A
COOLING	9.64	0	(0%)		

1. PROVIDE A NEMA 4X SS OUTDOOR ENCLOSURE.
2. IF ALTERNATE #1 IS ACCEPTED OMIT PANELBOARD.

MPZ

ROOM CENTRAL PLANT — VOLTS 240/120V 2P 3W — AIC 18,000
MOUNTING SURFACE — BUS AMPS 100 — MAIN BKR 40
FED FROM T-MPZ — NEUTRAL 100% — LUGS STANDARD
NOTE PROVIDE A TYPE WRITTEN AS BUILT DIRECTORY.

CKT #	CKT BKR	CIRCUIT DESCRIPTION	LOAD KVA A	LOAD KVA B	CKT #	CKT BKR	CIRCUIT DESCRIPTION	LOAD KVA A	LOAD KVA B
1	20/1	LIGHTING	0.395		2	20/1	SPARE	0	
3	20/1	RECEPT.		0.36	4	20/1	SPARE		0
5	20/1	DDC	0.03		6	20/1	SPARE	0	
7	20/1	SPARE		0	8	20/1	SPARE		0
							TOTAL CONNECTED KVA BY PHASE	0.425	0.36

	CONN KVA	CALC KVA			CONN KVA	CALC KVA	
LIGHTING	0.395	0.494	(125%)	RECEPTACLES	0.36	0.36	(50%>10)
				CONTINUOUS	0.03	0.038	(125%)
				TOTAL LOAD		0.891	
				BALANCED LOAD		3.71 A	

1. PROVIDE N3R ENCLOSURE.
2. PROVIDE PACKAGED POWER SUPPLY WITH INTEGRAL 7.5KVA TRANSFORMER, 30A/2P 480V PRIMARY MCB, AND 40A/2P 240V SECONDARY MCB.

C

ROOM OUTDOORS — VOLTS 208Y/120V 3P 4W — AIC 10,000
MOUNTING SURFACE — BUS AMPS 400 — MAIN BKR 400
FED FROM T-C — NEUTRAL 100% — LUGS STANDARD
NOTE PROVIDE A TYPE WRITTEN AS BUILT DIRECTORY THAT INCLUDES ROOM NUMBERS.

CKT #	CKT BKR	CIRCUIT DESCRIPTION	LOAD KVA A	LOAD KVA B	LOAD KVA C	CKT #	CKT BKR	CIRCUIT DESCRIPTION	LOAD KVA A	LOAD KVA B	LOAD KVA C
1	40/1	EF-1	1.92			2	25/1	EF-7	1.18		
3	40/1	EF-2		1.92		4	35/1	EF-8		1.66	
5	25/1	EF-3			1.92	6	35/1	EF-9			1.66
7	50/3	EXISTING PRESSURE WASHER	4.8			8	20/1	DDC PANELS	1.34		
9	|			4.8		10	20/1	SPACE		0	
11	|				4.8	12	20/1	SPACE			0
13	225/3	EXISTING PANEL A	10			14	20/1	SPACE	0		
15	|			10		16	20/1	SPACE		0	
17	|				10	18	20/1	SPACE			0
19	150/3	EXISTING CONTAINER	10			20	150/3	EXISTING PANEL L	10		
21	|			10		22	|			10	
23	|				10	24	|				10
								TOTAL CONNECTED KVA BY PHASE	39.2	38.4	38.4

	CONN KVA	CALC KVA			CONN KVA	CALC KVA	
LARGEST MOTOR	1.92	0.48	(25%)	CONTINUOUS	1.34	1.68	(125%)
MOTORS	10.2	10.2	(100%)	DIVERSE	104	104	(100%)
				TOTAL LOAD		117	
				BALANCED 3-PHASE LOAD		324 A	

1. PROVIDE A NEMA 4X SS OUTDOOR ENCLOSURE.

NO:	REVISION:	BY:
1 ADD	04/17/2026	ETHOS
2 ADD	04/27/2026	ETHOS

COPY NO:

STATE OF TEXAS
CESAR A. GONZALEZ
108611
LICENSED
PROFESSIONAL ENGINEER
03.23.2026

HVAC UPGRADES AT BROWNSVILLE ANIMAL REGULATION AND CARE FACILITY

OLMITO, TEXAS

F.M. 511

ethos engineering
1126 SOUTH COMMERCE ST.
HARLINGEN, TX
PHONE: 956-230-3435
TEXAS REGISTERED
ENGINEERING FIRM
F-15998

DATE: MARCH 23. 2026
CHECKED BY: C.A.G.
DRAWN BY: C.G.
PROJECT NO.: 24v67
CAD FILE: -
SHEET: E5.1

ZIWA
LIFELONG CUSTOMER COMMITMENT

07/01/2026

Damian Espinoza

Procurement Director

City Of Brownsville

1001 E. Elizabeth St. Brownsville, TX 78520

RE: 196-26-ISD-RFP - HVAC Upgrades at the Brownsville Animal Regulation and Care Facility

Dear Damian,

Please see attached requested information; Form *"RFCSP No. 196-26-ISD-RFP – HVAC Upgrades at the Brownsville Animal Regulation and Care Facility - Section 1 – Scope Pricing Confirmation"* for confirmation of base bid and alternate #1 best price. Also, find form *"Section 2 – Separate Electrical VE Deductive Pricing"* for details requested for VE option.

Enrique Mena

Project Manager

ZIWA Corporation

1952 S. Price Rd., Brownsville TX, 78521

Negotiation Pricing Response Form
RFCSP No. 196-26-ISD-RFP – HVAC Upgrades at the Brownsville Animal Regulation and Care Facility

For Negotiation Purposes Only

Vendor Name: Ziwa Corporation

Authorized Representative: Jorge de la Garza

Title: C.M.

Date: 7/1/2026

Section 1 – Scope Pricing Confirmation

Pricing Item	Amount
Confirmed Base Bid	$3,258,866.96
Confirmed Alternate #1	$745,104.04
Revised Negotiation Price for Base Bid + Alternate #1, without Alternate #2a or Alternate #2b	$ 3,909,970.00

Vendor confirms that Alternate #1 includes all labor, materials, equipment, supervision, overhead, bonds, insurance, permits, and all other costs necessary to complete the Alternate #1 scope.

Vendor confirms that there are no omissions, exclusions, or additional costs associated with Alternate #1.

Vendor response/comments:

Section 2 – Separate Electrical VE Deductive Pricing

VE Item	Deduct Amount	Schedule Impact	Assumptions / Comments
Aluminum feeders in lieu of copper feeders, as shown in the attached Engineer-prepared VE pricing exhibit	$ 17,785.00	-0-	
NEMA 3R enclosures in lieu of NEMA 4X stainless steel enclosures, as shown in the attached Engineer-prepared VE pricing exhibit	$ 37,275.00	-0-	requires expedited submittal review.
Combined VE Deduct, if both VE items are accepted by the City	$ 55,060.00	-0-	

Section 3 – Impact Statement

For each VE item proposed, identify any impact to warranty, maintenance, equipment life, performance, code compliance, or long-term operations: N/A

Section 4 – Certification

By signing below, the undersigned certifies that the pricing and information provided in this response is accurate, complete, and submitted by an authorized representative of Ziwa Corporation for purposes of contract negotiation with the City of Brownsville.

Signature: _____

Printed Name: Jose de la Garza

Title: G.M.

Date: 7/1/2026

Exhibit "F"

HVAC UPGRADES AT BROWNSVILLE ANIMAL REGULATION AND CARE FACILITY

OLMITO, TEXAS

VICINITY MAP

DATE OF ISSUE

MARCH 23, 2026

LIST OF DRAWINGS

COVER	COVER SHEET	M4.1	MECHANICAL EQUIPMENT SCHEDULES	E6.1	ELECTRICAL DETAILS
C1	TOPOGRAPHIC SURVEY	M5.1	MECHANICAL DETAILS	S1.1	STRUCTURAL GENERAL NOTES
C2	UTILITY, PAVING, AND GRADING PLAN	M5.2	MECHANICAL DETAILS	S1.2	STRUCTURAL GENERAL NOTES
C3	STORMWATER POLLUTION PREVENTION PLAN	ES1.0	ELECTRICAL SITE PLAN	S2.1	CHILLER YARD FOUNDATION PLAN
M1.0	MECHANICAL GENERAL NOTES, SYMBOL LEGEND, & ABBREVIATIONS	E1.0	ELECTRICAL GENERAL NOTES, SYMBOL LEGEND, & ABBREVIATIONS	S2.2	DUMPSTER FOUNDATION PLAN AND FOUNDATION DETAILS
M2.1	MECHANICAL DEMOLITION PLAN	E2.1	ELECTRICAL DEMOLITION PLAN	S3.1	STRUCTURAL DEMOLITION/ROOF DECK INFILL FRAMING PLAN
M2.2	MECHANICAL DEMOLITION ROOF PLAN	E2.2	ELECTRICAL DEMOLITION ROOF PLAN	S3.2	STRUCTURAL RENOVATION FRAMING PLAN
M2.3	CENTRAL PLANT ENLARGED DEMOLITION PLAN	E3.1	ELECTRICAL RENOVATION PLAN	S3.3	EXISTING JOIST REINFORCING PROFILES
M3.1	MECHANICAL RENOVATION PLAN	E3.2	ELECTRICAL RENOVATION ROOF PLAN	S3.4	CANOPY FRAMING PLAN AND DETAILS
M3.2	MECHANICAL RENOVATION ROOF PLAN	E3.3	CENTRAL PLANT ENLARGED ELECTRICAL PLAN		
M3.3	CENTRAL PLANT ENLARGED MECHANICAL PLAN	E4.1	ELECTRICAL RISER DIAGRAMS		
M3.4	CHILLED WATER SCHEMATIC RISER DIAGRAMS	E5.1	ELECTRICAL PANEL SCHEDULES		

GOVERNMENT OFFICIALS

JOHN COWEN, JR	MAYOR
BRYAN L. MARTINEZ	CITY COMMISSIONER DISTRICT 1
LINDA C. MACIAS	CITY COMMISSIONER DISTRICT 2
GUSTAVO DE LEÓN	CITY COMMISSIONER DISTRICT 3
PEDRO CARDENAS	CITY COMMISSIONER DISTRICT 4
HELEN RAMIREZ, ICMA-CM, AICP	CITY MANAGER
TINO VILLAREAL, JR	CITY COMMISSIONER AT LARGE A
NURITH GALONSKY	CITY COMMISSIONER AT LARGE B

SCOPE OF WORK:

SCOPE OF WORK: PROVIDE ALL MATERIALS AND LABOR ASSOCIATED WITH COMPLETE OPERATIONAL SYSTEMS. MAJOR ITEMS OF WORK INCLUDE, BUT ARE NOT LIMITED TO:

1. BASE BID: INCLUDES ALL WORK EXCEPT THE SCOPE SHOWN IN ALTERNATE BID BELOW.
2. ALTERNATE BID: WORK ASSOCIATED WITH DOAS-5, RTUS-1 AND 2, AND RELATED CONTROLS WILL BE PRICED SEPARATELY UNDER ALTERNATE BID # 1. SEE DRAWINGS.
3. DEMOLITION WORK:
   a. REMOVE AND DISPOSE OF EXISTING HVAC SYSTEMS INCLUDING RTUS, ERVS, DOAS, EXHAUST FANS, INDICATED DUCTWORK, MOTORIZED DAMPERS, SENSORS AND CONTROL SYSTEMS.
   b. SEE DRAWINGS FOR REMOVAL OF ASSOCIATED MATERIALS SUCH AS SUPPORT ASSEMBLIES, ROOF CURBS, DUCTWORK CONNECTIONS, CONDENSATE DRAIN PIPING, MISCELLANEOUS MATERIALS, CONTROLS, AND DEVICES ASSOCIATED WITH DEMOLISHED EQUIPMENT, INCLUDING AND NOT LIMITED TO, HANGERS, SUPPORTS, MOUNTING HARDWARE, CONDUIT & POWER WIRING, ETC. CLEAR AREA AND PREPARE FOR NEW WORK.
   c. SAVE EXISTING SMOKE DETECTORS, WIRING AND SAFETIES FOR REUSE. DOCUMENT DEVICES THAT ARE NOT IN WORKING ORDER.
   d. WHERE INDICATED, SAVE EXISTING POWER WIRING, CONDUIT AND CIRCUIT BREAKERS FOR REUSE. VERIFY SIZE AND CONDITION OF CIRCUIT BREAKERS, CONDUITS AND WIRING TO BE REUSED. DEMOLISH ELECTRICAL EQUIPMENT AND OTHER MISCELLANEOUS MATERIALS AS NOTED IN THE DRAWINGS.
   e. FOR REPLACED EQUIPMENT, DEMOLISH OLD BAS CONTROL SYSTEMS THAT WILL NO LONGER BE USED.
4. NEW WORK: PROVIDE ALL MATERIALS AND LABOR ASSOCIATED WITH NEW FULLY OPERATIONAL MECHANICAL AND CONTROLS SYSTEMS, INCLUDING BUT NOT LIMITED TO THE FOLLOWING:
   a. AIR-COOLED CHILLERS WITH INTEGRAL PRIMARY PUMPS, SECONDARY CHILLED WATER PUMPS, AIR SEPARATORS, EXPANSION TANK, GAUGES, FITTINGS, VALVES, HARDWARE, HYDRONIC SPECIALTIES, AND CHEMICAL TREATMENT, AND PLUMBING SYSTEMS RELATED TO MAKE UP WATER TO THE CHILLER PLANT. PROVIDE CONCRETE PADS AND RAIN-CANOPY FOR PUMPS AND HYDRONIC SPECIALTIES.
   b. HYDRONIC DISTRIBUTION SYSTEMS, INCLUDING PAINTED, INSULATED AND JACKETED CHILLED WATER PIPING, PIPE CONNECTIONS, VALVES, PIPING SPECIALTIES, HOT DIPPED GALVANIZED PIPE STANCHIONS AND PIPING SUPPORTS, AS INDICATED ON PIPING PLANS AND SCHEMATICS. PROVIDE INSULATION ON COLD SURFACES CAPABLE OF GENERATING CONDENSATION. ALUMINUM JACKETING FOR ALL PIPING EXPOSED OUTDOORS AND IN THE PUMP ROOM.
   c. INSULATED CHILLED WATER PIPING, VALVES, FITTINGS, PUMP BODIES AND COLD SURFACES CAPABLE OF GENERATING CONDENSATION.
   d. HYDRONIC CENTRAL STATION DEDICATED OUTSIDE AIR SYSTEMS (DOAS), RTUS, ROOF CURBS, SUPPORT ASSEMBLY, DUCT TRANSITIONS, PIPING, MISCELLANEOUS MATERIALS, UTILITIES AND ACCESSORIES, INDICATED IN THE DRAWINGS.
   e. PROVIDE NEW EFS, ROOF CURBS, DUCTWORK, AND RELATED CONTROLS.
   f. DUCTWORK MODIFICATIONS, MOTORIZED DAMPERS, AND OTHER ACCESSORIES TO DELIVER A COMPLETE AND OPERATIONAL SYSTEM.
   g. TESTING, ADJUSTING, & BALANCING (TAB).
   h. CONTROLS: PROVIDE NEW BAS. COORDINATE WITH EQUIPMENT SUPPLIER AND FIRE ALARM CONTRACTOR TO PROVIDE FULLY INTEGRATED AND OPERATIONAL CONTROLS, INCLUDING UNITARY CONTROLLERS, SOFTWARE, SENSORS, TRAINING, ETC.
   i. SHOP DRAWING SUBMITTALS FOR ALL MECHANICAL SYSTEMS INCLUDING BUT NOT LIMITED TO EQUIPMENT, DUCTWORK AND PIPING. COORDINATION DRAWINGS FOR PLACING OF MECHANICAL SYSTEMS IN RELATION TO WORK BY OTHER DISCIPLINES.
   j. COORDINATE ELECTRICAL WORK WITH DIV. 26 AS REQUIRED.
   k. COORDINATE PLUMBING WORK WITH DIV. 22.
   l. COORDINATE WORK WITH STRUCTURAL FOR CHILLER PAD, CANOPY, ROOF PENETRATIONS, WINDSTORM CERTIFICATION.
   m. COORDINATE WORK WITH ROOFING CONTRACTOR.
   n. COORDINATE FIRE ALARM RELATED WORK WITH FIRE ALARM CONTRACTOR. PROVIDE SMOKE DETECTORS, WIRING AND CONTROLS FOR UNITS, 2000 CFM AND LARGER, WHERE NONE EXIST.
   o. PROVIDE CUTTING AND PATCHING AND TOUCH UP PAINTING AS REQUIRED.
   p. PROVIDE ARCHITECTURAL, STRUCTURAL, CONCRETE, PAINTING WORK PER PLANS.
3. PROVIDE WINDSTORM CERTIFICATION FOR EXTERIOR WORK. CONTRACTOR IS RESPONSIBLE FOR PROVIDING WINDSTORM CERTIFICATION INSPECTIONS AND CERTIFICATIONS FOR ROOFTOP EQUIPMENT. CONTRACTOR MUST NOTIFY INSPECTOR PRIOR TO INSTALLING EQUIPMENT, AND APPRISE INSPECTOR OF WORK SCHEDULING INVOLVING EQUIPMENT REQUIRING WIND INSPECTION / CERTIFICATION, SO THAT INSPECTIONS MAY BE CARRIED OUT AT REQUIRED STAGE(S) OF CONSTRUCTION. COST FOR INSPECTION SHALL BE BORNE BY THE CONTRACTOR. INSPECTOR SHALL BE CERTIFIED BY THE TEXAS DEPARTMENT OF INSURANCE (SEE WWW.TDI.STATE.TX.US FOR A LIST OF CERTIFIED INSPECTORS).
4. COMMISSIONING: PROVIDE ASSISTANCE WITH COMMISSIONING SERVICES PER SPECIFICATIONS. THIS INCLUDES COMPLETING SYSTEMS READINESS CHECKLISTS, PERFORMING FUNCTIONAL TESTING, PROVIDING OPERATOR TRAINING, ETC.
5. ALLOWANCES: THE OWNER HAS SET ASIDE ALLOWANCES FOR UNFORESEEN CIRCUMSTANCES. SEE SECTION 012100.

NO:	REVISION:	BY:

COPY NO.

HVAC UPGRADES AT BROWNSVILLE ANIMAL REGULATION AND CARE FACILITY

OLMITO, TEXAS

F.M. 511

ethos engineering
1126 SOUTH COMMERCE ST.
HARLINGEN, TX
PHONE: 956-230-3435
TEXAS REGISTERED
ENGINEERING FIRM
F-15098

DATE:	MARCH 23. 2026
CHECKED BY:	C.A.G.
DRAWN BY:	
PROJECT NO.:	24v67
CAD FILE:	-
SHEET:	COVER

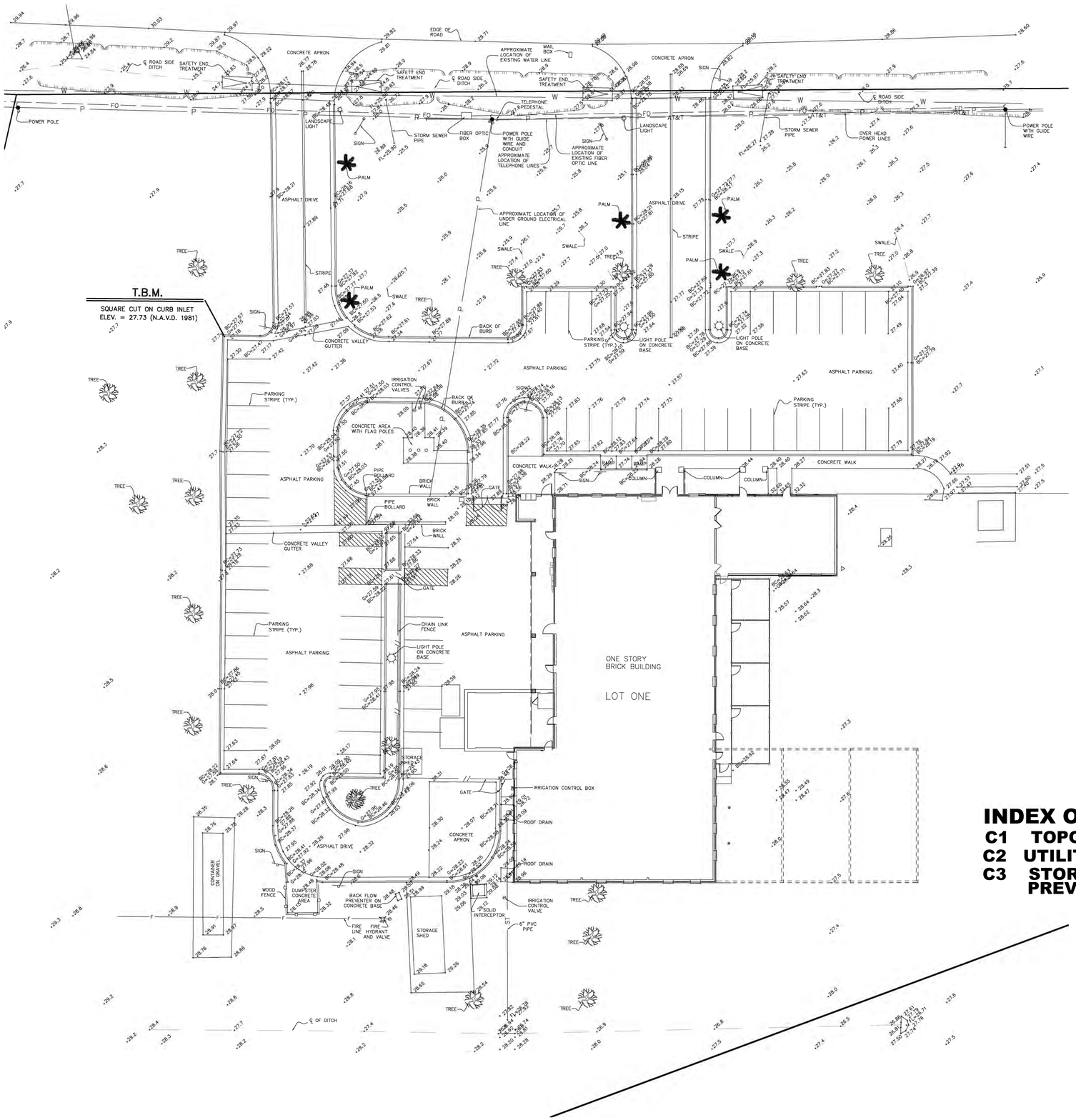

THE SEAL APPEARING ON THIS DOCUMENT WAS AUTHORIZED BY JAMES E. ROSE, P.E. 44096 3/23/26
ALTERATION OF A SEALED DOCUMENT WITHOUT PROPER NOTIFICATION TO THE RESPONSIBLE ENGINEER IS AN OFFENSE UNDER THE TEXAS ENGINEERING PRACTICE LAW

LEGEND

+21.3	EXISTING GROUND SURFACE ELEVATION
+21.33	EXISTING PAVEMENT SURFACE ELEVATION
+BC=21.33	EXISTING BACK OF CURB ELEVATION
+GC=21.33	EXISTING BACK OF GUTTER ELEVATION

INDEX OF SITE WORK SHEETS

C1 TOPOGRAPHIC SURVEY
C2 UTILITY, PAVING AND GRADING PLAN
C3 STORM WATER POLLUTION PREVENTION PLAN REQUIREMENTS

TOPOGRAPHIC SURVEY 1" =20'

Mejia & Rose, Incorporated
Engineering Surveying
T.B.P.E. Reg. No. F-2670
T.B.P.L.S. Reg. No. 10023900
1643 West Price Road (956) 544-3022
P.O. Box 3761 Brownsville, Texas 78520
Fax (956) 544-3068

NO:	REVISION:	BY:

COPY NO:

STATE OF TEXAS
JAMES E. ROSE
44096
LICENSED PROFESSIONAL ENGINEER

HVAC UPGRADES AT BROWNSVILLE ANIMAL REGULATION AND CARE FACILITY

OLMITO, TEXAS

F.M. 511

ethos engineering
1126 SOUTH COMMERCE ST.
HARLINGEN, TX
PHONE: 956-230-3435
TEXAS REGISTERED ENGINEERING FIRM
F-15998

DATE:	MARCH 23, 2026
CHECKED BY:	C.A.G.
DRAWN BY:	
PROJECT NO.:	24v67
CAD FILE:	-
SHEET:	C1

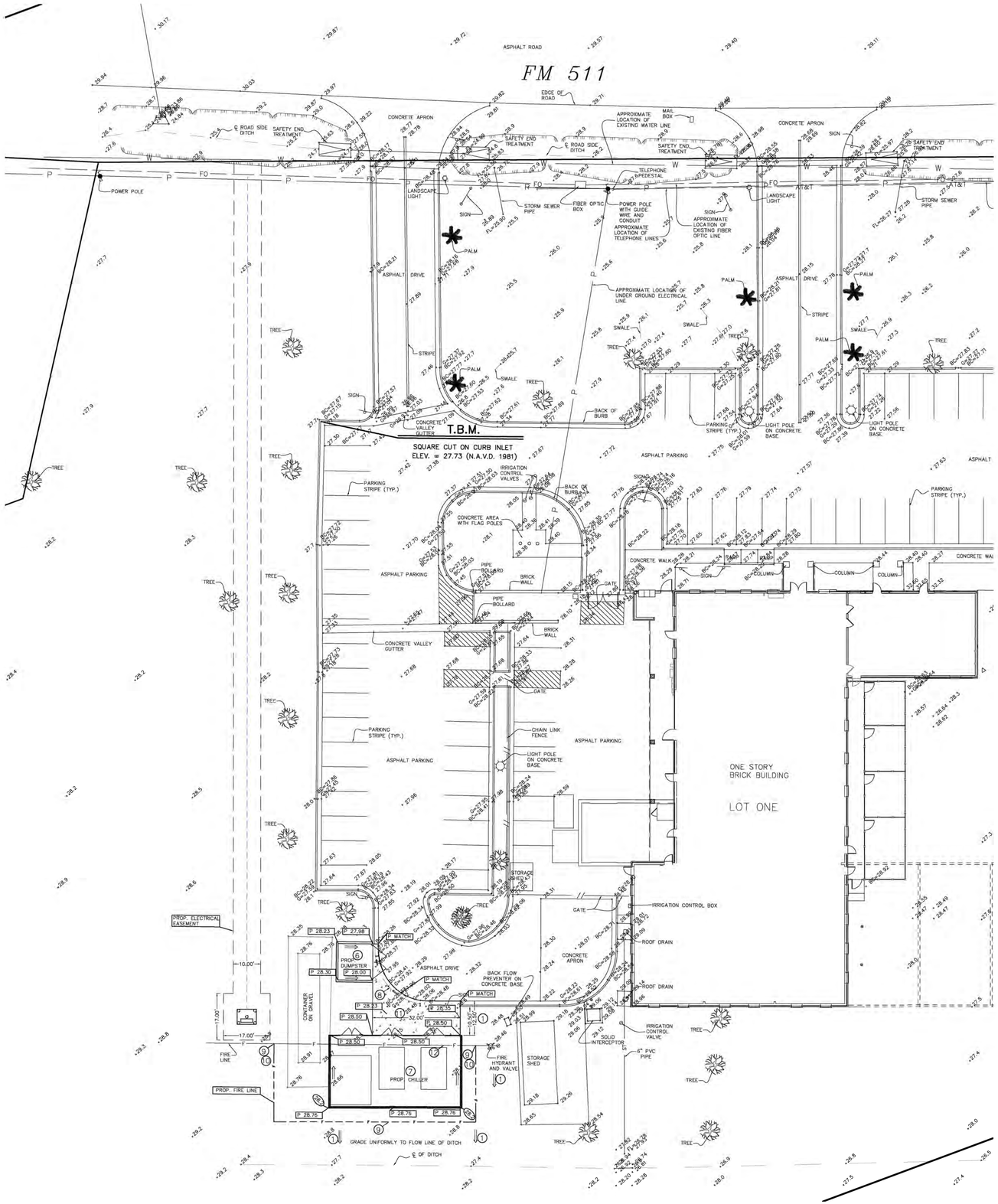

CALL TEXAS 811 FOR SPOTTING OF UTILITIES PRIOR TO ANY TYPE OF CONSTRUCTION! 1-800-344-8377

LEGEND

27.3	EXISTING GROUND SURFACE ELEVATION
TS 24.70	TOP OF SIDEWALK ELEVATION
TC 23.96	TOP OF CURB ELEVATION
P 23.96	PAVEMENT ELEVATION
G 21.00	GUTTER ELEVATION
24.9	FINISHED GROUND SURFACE ELEVATION
⟹	DIRECTION OF DOWNWARD SLOPE
⟹	SURFACE SWALE

NOTES

1. GRADE ALL AREAS (SMOOTH AND FINELY GRADED AT A UNIFORM SLOPE AS NEEDED TO RECIEVE HYDROMULCHING OR SOD) TO DRAIN TO THE NEAREST DRAINAGE OUTLET OR SWALE
2. ALL DEBRIS AND EXCESS EARTH MATERIAL GENERATED BY THE SITEWORK OPERATIONS WILL BECOME PROPERTY OF THE CONTRACTOR TO BE REMOVED FROM THE SITE AND PROPERLY DISPOSED AT HIS EXPENSE.
3. NO SIDEWALKS SHALL HAVE A CROSS SLOPE GREATER THAN 2% OR LONGITUDINAL SLOPE GREATER THAN 5% AND SHALL MEET ADA AND TAS REQUIREMENTS. RAMPS SHALL HAVE DETECTABLE WARNING SURFACE AND SLOPE NOT TO EXCEED 8.33%.
4. BACKFILL ALL CURB & GUTTER, PAVEMENT EDGES AND SIDEWALKS TO 3" BELOW TOP OF CURB OR SIDEWALK AND SLOPE TO EXISTING GROUND AT 10 TO 1 OR TO NEAREST DRAINAGE OUTLET
5. NO IRRIGATION SPRINKLER HEADS OR PIPING SHALL BE INSTALLED IN ANY AREA UNTILL FINAL GRADING IN THAT AREA HAS BEEN COMPLETED AND APPROVED BY SITEWORK ENGINEER.
6. SEE STRUCTURAL PLANS FOR DUMPSTER FOUNDATION SPECIFICATIONS.
7. SEE STRUCTURAL PLANS FOR CHILLER FOUNDATION SPECIFICATIONS.
8. MAINTAIN GUTTER FLOW
9. FIRE CONNECTION, VALVES AND LINE TO BE SIZED AND INSTALLED BY A LICENSED FIRE LINE INSTALLER
10. CUT AND INSTALL 90° FITTING, MATCH SIZE TO EXISTING FIRE LINE
11. 6" CONCRETE WITH #4 BAR @ 12" BOTH WAYS. 6" MOISTURE CONDITION AND COMPACT TO 95% STANDARD PROCTOR DENSITY (ASTM D698) AT OPTIMUM MOISTURE TO 2 PERCENTAGE POINTS ABOVE MOISTURE CONTENT.
12. REMOVE EXISTING FIRE LINE

THE SEAL APPEARING ON THIS DOCUMENT WAS AUTHORIZED BY JAMES E. ROSE, P.E. 44096 3/23/26
ALTERATION OF A SEALED DOCUMENT WITHOUT PROPER NOTIFICATION TO THE RESPONSIBLE ENGINEER IS AN OFFENSE UNDER THE TEXAS ENGINEERING PRACTICE LAW

STATE OF TEXAS
JAMES E. ROSE
44096
LICENSED
PROFESSIONAL ENGINEER

NO:	REVISION:	BY:

COPY NO:

HVAC UPGRADES AT BROWNSVILLE ANIMAL REGULATION AND CARE FACILITY

F.M. 511

OLMITO, TEXAS

UTILITY, PAVING AND GRADING PLAN 1" =20'

ethos engineering
1126 SOUTH COMMERCE ST.
HARLINGEN, TX
PHONE: 956.230.3435
TEXAS REGISTERED ENGINEERING FIRM F-15096

Mejia & Rose, Incorporated
Engineering Surveying
T.B.P.E. Reg. No. F-2670
T.B.P.L.S. Reg. No. 10023900
1643 West Price Road (956) 544-3022
P.O. Box 3761 Brownsville, Texas 78520
Fax (956) 544-3068

DATE:	MARCH 23, 2026
CHECKED BY:	C.A.G.
DRAWN BY:	
PROJECT NO.:	24v67
CAD FILE:	-
SHEET:	C2

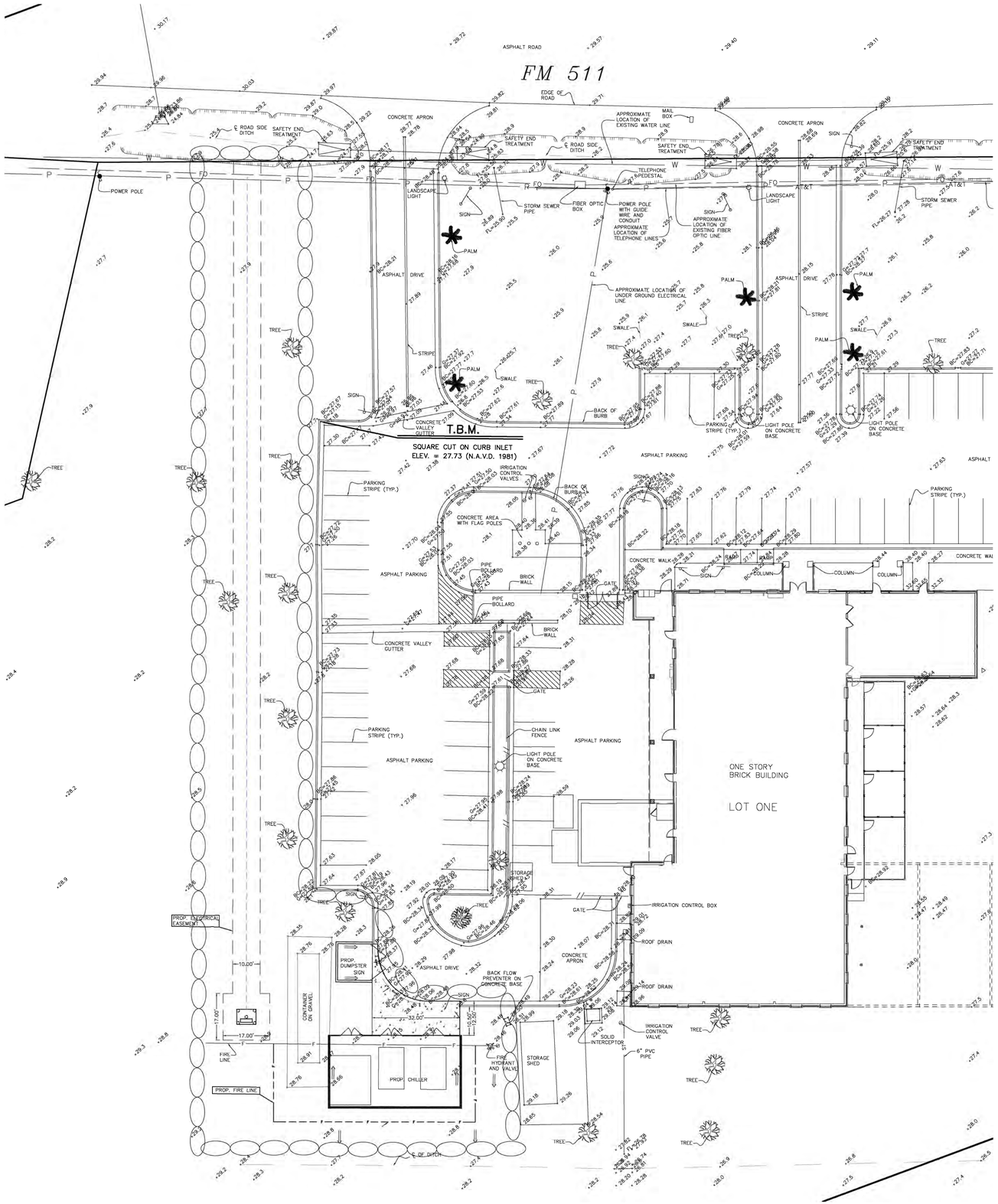

CONTRACTOR'S RESPONSIBILITY FOR PREPARATION AND IMPLEMENTATION OF STORMWATER POLLUTION PREVENTION PLAN

1. IT IS THE INTENT OF THE INFORMATION PROVIDED WITHIN THESE SPECIFICATIONS TO BE USED BY THE CONTRACTOR AS THE GENERAL GUIDELINES OF THE **STORM WATER POLLUTION PREVENTION PLAN** FOR THIS PROJECT TO ESTABLISH A MINIMUM BASIS OF COMPLIANCE WITH THE FEDERAL REGULATIONS.

2. THE CONTRACTOR'S **STORM WATER POLLUTION PREVENTION PLAN** SHOULD ADDRESS THREE GOALS:

   A. DIVERSION OF UPSLOPE WATER AROUND DISTURBED AREAS OF THE SITE;

   B. LIMITS THE EXPOSURE OF DISTURBED AREAS TO THE SHORTEST DURATION POSSIBLE; AND

   C. REMOVAL OF SEDIMENT FROM STORM WATER BEFORE IT LEAVES THE SITE.

* 3. IF AREA OF PROJECT REQUIRES, THE CONTRACTOR SHALL PREPARE AND FILE FOR BOTH OWNER AND CONTRACTOR TO THE TEXAS COMMISSION ON ENVIRONMENTAL QUALITY STORM WATER + GENERAL PERMITS TEAM (TCEQ) NOTICE OF INTENT (NOI) FORMS BEFORE BEGINNING ANY CONSTRUCTION.

4. THE CONTRACTOR SHALL MAKE THE **STORM WATER POLLUTION PREVENTION PLAN** AVAILABLE, UPON REQUEST, TO TCEQ.

5. THE CONTRACTOR MUST AMEND PLANS WHENEVER THERE IS A CHANGE IN DESIGN, CONSTRUCTION, OPERATION, OR MAINTENANCE OF THE PLAN, OR WHEN THE EXISTING PLAN PROVE INEFFECTIVE. MODIFICATIONS INCLUDING DESIGN AND ALL ADDITIONAL MATERIALS AND WORK, SHALL BE ACCOMPLISHED BY THE CONTRACTOR AT NO ADDITIONAL EXPENSE TO THE OWNER.

6. STABILIZATION MEASURES ARE TO BE INSPECTED AT A MINIMUM OF ONCE EVERY 14 DAYS AND WITHIN 24 HOURS AFTER ANY STORM EVENT GREATER THAN 0.5 INCHES. REPAIRS AND INADEQUACIES REVEALED BY THE INSPECTION MUST BE REMEDIED WITHIN 7 CALENDAR DAYS.

7. ALL INSPECTION REPORTS SUMMARIZING INSPECTION ACTIVITIES, REMEDIAL ACTION TAKEN, AND ACTUAL IMPLEMENTATION OF THE **STORM WATER POLLUTION PREVENTION PLAN** SHALL BE RETAINED AND MADE PART OF THE PLAN.

8. ALL CONTRACTORS AND SUBCONTRACTORS IDENTIFIED IN THE PLAN MUST CERTIFY AS TO AN UNDERSTANDING OF THE TPDES GENERAL PERMIT BEFORE CONDUCTING ANY ACTIVITY IDENTIFIED IN THE **STORM WATER POLLUTION PREVENTION PLAN.**

9. THE CONTRACTOR SHALL ADOPT APPROPRIATE CONSTRUCTION SITE MANAGEMENT PRATICES TO PREVENT THE DISCHARGE OF OILS, GREASE, PAINTS, GASOLINE, AND OTHER POLLUTANTS TO STORM WATER. APPROPRIATE PRACTICES CAN INCLUDE:

   - DESIGNATED AREAS FOR EQUIPMENT MAINTENANCE AND REPAIR;
   - REGULAR COLLECTION OF WASTE;
   - CONVENIENTLY LOCATED WATER RECEPTACLES; AND
   - DESIGNATING AND CONTROLING EQUIPMENT WASH-DOWN.

10. THE CONTRACTOR SHALL AMEND OR MODIFY THIS PLAN AS REQUIRED BY CONSTRUCTION MEANS, METHODS AND SEQUENCE. MODIFICATIONS SHALL NOT COMPROMISE THE INTENT OF THE REQUIREMENTS OF THE LAW OR THE PLANS. MODIFICATIONS SHALL NOT BE BASIS FOR ADDITIONAL COST TO THE OWNER.

11. THE CONTRACTOR SHALL CONSTRUCT A STABILIZED CONSTRUCTION ENTRANCE AT ALL TRAFFIC ENTRANCE/EXIT POINTS PRIOR TO EXITING ONTO AND PAVED ROADWAYS. (SEE DETAIL 1)

12. THE CONTRACTOR SHALL PROTECT ALL POTENTIAL POINTS OF DISCHARGE OF RUNOFF (INLETS, GUTTERS, SWALES AND UNVEGETATED RESACA BANK AREAS) WITH SILT FENCING HAY BALES, GRAVEL FILLED BAGS AS SHOWN ON DETAILS 2 AND 3 OR EQUIVALENT MEANS APPROVED BY ENGINEER.

13. FINAL STABILIZATION SHALL BE ACCOMPLISHED BY INSTALLING A 2 FEET WIDE STRIP OF SOD BEHIND CURB OR SIDEWALK. CONTRACTOR SHALL WATER THE SOD IMMEDIATELY AFTER INSTALLATION AND 3 TIMES PER WEEK FOR 2 WEEKS AFTER INSTALLATION.

* *NOTE: THE TOTAL AREA OF THIS PROJECT IS LESS THAN 5 ACRES THEREFORE, THE FILING OF NOTICE OF INTENT (NOI) AND NOTICE OF TERMINATION (NOT) IS REQUIRED. ALL OTHER REQUIREMENTS SHALL APPLY.*

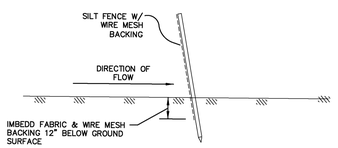

2 *SILT FENCE INSTALLATION*

N.T.S.

TO BE INSTALLED WHEREVER THERE IS POTENTIAL FOR RUNOFF TO LEAVE SITE OR ENTER DRAINAGE SYSTEM.

TO BE INSTALLED WHEREVER THERE IS POTENTIAL FOR RUNOFF TO LEAVE SITE OR ENTER DRAINAGE SYSTEM.

LEGEND	
	24" HIGH SILT FENCE

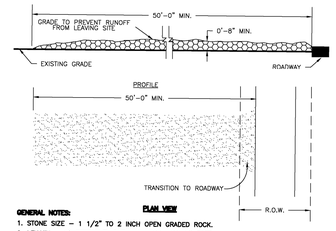

GENERAL NOTES: **PLAN VIEW**

1. STONE SIZE – 1 1/2" TO 2 INCH OPEN GRADED ROCK.
2. LENGTH – AS EFFECTIVE, BUT NOT LESS THAN 50 FEET.
3. THICKNESS – NOT LESS THAN 8 INCHES.
4. WIDTH – NOT LESS THAN FULL WIDTH OF ALL POINTS OF INGRESS OR EGRESS.
5. WASHING – WHEN NECESSARY, WHEELS SHALL BE CLEANED TO REMOVE SEDIMENT PRIOR TO ENTRANCE ONTO PUBLIC ROADWAY. WHEN WASHING IS REQUIRED, IT SHALL BE DONE ON AN AREA STABILIZED WITH CRUSHED STONE WHICH DRAINS INTO AN APPROVED TRAP OR SEDIMENT BASIN. ALL SEDIMENT SHALL BE PREVENTED FROM ENTERING ANY STORM DRAIN, DITCH, OR WATERCOURSE USING APPROVED METHODS.
6. MAINTENANCE – THE ENTRANCE SHALL BE MAINTAINED IN A CONDITION WHICH WILL PREVENT TRACKING OR FLOWING OF SEDIMENT ONTO PUBLIC ROADWAYS. THIS MAY REQUIRE PERIODIC TOP DRESSING WITH ADDITIONAL STONE AS CONDITIONS DEMAND, AND REPAIR AND/OR CLEANOUT OF ANY MEASURES USED TO TRAP SEDIMENT. ALL SEDIMENT SPILLED, DROPPED WASHED, OR TRACKED ONTO PUBLIC ROADWAY MUST BE REMOVED IMMEDIATELY.
7. DRAINAGE – ENTRANCE MUST BE PROPERLY GRADED OR INCORPORATE A DRAINAGE SWALE TO PREVENT RUNOFF FROM LEAVING THE CONSTRUCTION SITE.

1 STABILIZED CONSTRUCTION ENTRANCE DETAIL

N.T.S.

MAY NOT BE NECESSARY IF EXISTING PAVED ENTRANCES ARE USED SUBJECT TO NOTES NO. 5 AND NO. 6

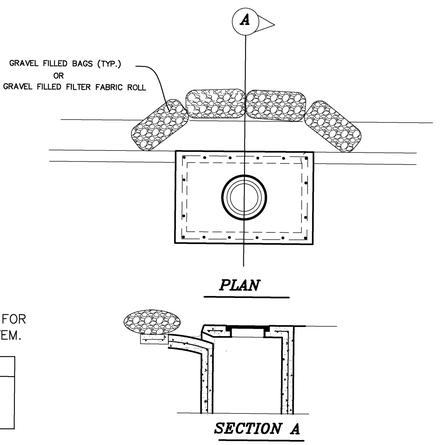

3 *GRAVEL FILLED BAGS AT INLETS*

THE SEAL APPEARING ON THIS DOCUMENT WAS AUTHORIZED BY JAMES E. ROSE, P.E. 44096 3/23/26

ALTERATION OF A SEALED DOCUMENT WITHOUT PROPER NOTIFICATION TO THE RESPONSIBLE ENGINEER IS AN OFFENSE UNDER THE TEXAS ENGINEERING PRACTICE LAW

NO: REVISION: BY:

COPY NO:

STATE OF TEXAS
JAMES E. ROSE
44096
LICENSED
PROFESSIONAL ENGINEER

HVAC UPGRADES AT BROWNSVILLE ANIMAL REGULATION AND CARE FACILITY

OLMITO, TEXAS

F.M. 511

STORM WATER POLLUTION PREVENTION PLAN REQUIREMENTS

1" =20'

ethos engineering
1126 SOUTH COMMERCE ST.
HARLINGEN, TX
PHONE: 956-230-3435
TEXAS REGISTERED ENGINEERING FIRM
F-15998

DATE: MARCH 23, 2026

CHECKED BY: C.A.G.

DRAWN BY:

PROJECT NO.: 24v67

CAD FILE: -

SHEET: C3

Mejia & Rose, Incorporated
Engineering Surveying
T.B.P.E. Reg. No. F-2670
T.B.P.L.S. Reg. No. 10023900
1643 West Price Road (956) 544-3022
P.O. Box 3761 Brownsville, Texas 78520
Fax (956) 544-3068

CODES & ORDINANCES:

1. GENERAL:
   a. UNLESS DRAWINGS OR SPECIFICATIONS HAVE MORE STRINGENT REQUIREMENTS, PERFORM ALL WORK PER APPLICABLE VERSION OF INTERNATIONAL BUILDING CODES, AND LOCAL CODES AND ORDINANCES.

   b. PRIOR TO SUBMITTING PROPOSAL, NOTIFY ENGINEER OF ANY ASPECTS OF DESIGN WHICH ARE THOUGHT TO BE IN NONCOMPLIANCE WITH APPLICABLE CODES.

2. PERMITS:
   a. CONTRACTOR IS RESPONSIBLE FOR ALL PERMITS AND FEES ASSOCIATED WITH PROJECT, INCLUDING FEES FOR INSPECTIONS, APPLICATIONS, AND PROVISION OF NEW SERVICES.

   b. CONTRACTOR WHO WILL ACTUALLY PERFORM WORK MUST APPLY FOR ALL REQUIRED PERMITS.

4. APPROVALS AND INSPECTIONS:
   a. OBTAIN APPROVAL FROM CITY FIRE DEPARTMENT AND BUILDING AND SAFETY DEPARTMENT PRIOR TO INSTALLATION OF ANY FIRE RELATED ITEMS.

   b. COORDINATE PRESSURE TESTS, INSPECTIONS AND APPROVAL FOR ALL SYSTEMS WITH PERMITTING OFFICER, OWNER AND ENGINEER.

GENERAL NOTES:

1. CONTRACT RELATED:
   a. COORDINATE WORK AMONG ALL DISCIPLINES. IT IS NOT THE INTENT OF THESE DOCUMENTS TO DICTATE WHO MUST DO THE WORK. ALL WORK SHOWN IS THE RESPONSIBILITY OF THE (PRIME) CONTRACTOR.

   b. WORK TO BE DONE UNDER ALLOWANCES BECOMES AN INTEGRAL PART OF THE PROJECT AND RESPONSIBILITY OF CONTRACTOR ONCE ALLOWANCE IS APPROVED.

   c. CONTRACTOR SHALL NOT PROCEED WITH ANY WORK INVOLVING A CHANGE IN PROJECT SCOPE OR COST WITHOUT FIRST HAVING OBTAINED ENGINEER'S APPROVAL IN WRITING. UNLESS ENGINEER HAS AGREED TO SUCH CHANGE PRIOR TO IT BEING DONE, AND HAS AGREED THAT AN INCREASE IN COST ASSOCIATED WITH SUCH CHANGE IS WARRANTED; CONTRACTOR WILL NOT BE REIMBURSED FOR SUCH CHANGE.

2. TEST & BALANCE:
   a. TEST & BALANCE SHALL BE PERFORMED UNDER GENERAL CONTRACTOR, SEPARATE FROM MECHANICAL CONTRACT. DURING BIDDING, CONTRACTOR SHALL SUBMIT A COPY OF EVIDENCE THAT TAB AGENT MEETS THE QUALIFICATIONS SPECIFIED UNDER DIV. 23 SECTION 230593 TO PRIME CONTRACTOR.

   b. CONTRACTOR SHALL COORDINATE TAB ACTIVITIES WITH TAB CONTRACTOR.

COORDINATION:

1. GENERAL:
   a. CONTRACTOR SHALL REVIEW COMPLETE DOCUMENTS PRIOR TO SUBMITTAL OF PROPOSAL TO GAIN COMPLETE UNDERSTANDING OF PROJECT SCOPE, WORK BY OTHERS, AND MECHANICAL WORK ASSOCIATED WITH OTHER DISCIPLINES.

   b. TIME OR MONEY ALLOWANCES WILL NOT BE MADE TO ACCOMMODATE UTILITY CONFLICTS THAT CAN BE REASONABLY RESOLVED BY COORDINATION DURING SHOP DRAWING STAGE.

   c. PROVIDE COORDINATION DRAWINGS OF REFLECTED CEILING PLAN AND SECTION ABOVE CEILING SHOWING WORK OF ALL AFFECTED TRADES. DO NOT PROCEED WITH FABRICATION WORK UNTIL COORDINATION DRAWINGS HAVE BEEN APPROVED BY A/E.

2. SITE:
   a. TIME OR MONEY ALLOWANCES WILL NOT BE MADE TO ACCOMMODATE UTILITY CONFLICTS THAT CAN BE REASONABLY RESOLVED BY COORDINATION DURING SHOP DRAWING STAGE.

3. ARCHITECTURAL AND STRUCTURAL:
   a. REFER TO ARCHITECTURAL AND STRUCTURAL PLANS FOR DETAILS OF CONSTRUCTION, INCLUDING BEAMS, FLOOR AND WALL PENETRATIONS, CHASES, AND REFLECTED CEILING PLANS. VERIFY OPENING SIZES WITH EQUIPMENT FURNISHED.

   b. SLEEVE ALL EXTERIOR WALL AND GRADE BEAM PENETRATIONS. GRADE BEAM PENETRATIONS SHALL BE MADE WITHIN MIDDLE 1/3 OF VERTICAL SPAN OF BEAM.

   c. SEAL AROUND DUCTS AND PIPING AT ALL WALLS, A/C ROOMS AND WALL LOUVER PENETRATIONS WITH FIREPROOF CAULKING. RE: SPECS. PROVIDE ESCUTCHEON PLATES AND FLASHING AROUND PENETRATION, BOTH INSIDE AND OUTSIDE, TO PROVIDE FINISHED LOOK.

4. SPATIAL COORDINATION:
   a. COORDINATE ALL WORK WITH OTHER TRADES; COORDINATE SCHEDULE OF WORK WITH ALL SUB-CONTRACTORS TO ACHIEVE SMOOTH FLOW OF CONSTRUCTION.

   b. SPACES ABOVE CEILING ARE CONGESTED. DESIGN INTENT IS THAT UTILITIES BE INSTALLED TIGHT AGAINST CEILING STRUCTURE TO EXTENT POSSIBLE, WHILE RETAINING ADEQUATE MAINTENANCE ACCESS PER CODES.

   c. IN CASE OF CONFLICTS, ITEMS SHALL BE ARRANGED ACCORDING TO THE FOLLOWING PRIORITIES: LIGHTING, FIRE PROTECTION, HVAC. PROVIDE OFFSETS/RISES/DROPS REQUIRED TO RESOLVE CONFLICTS WITH OTHER UTILITIES, AND TO ACCOMMODATE ALL UTILITIES ABOVE CEILINGS.

   d. IN GENERAL, REROUTE SMALLER DUCTS/PIPES THROUGH JOISTS TO RESOLVE CONFLICTS WITH LARGER. PERFORM REROUTING IN MOST EFFICIENT MANNER POSSIBLE, AND IN ACCORDANCE WITH INDUSTRY STANDARDS.

   e. PROVIDE COORDINATION DRAWINGS OF REFLECTED CEILING PLAN AND SECTION ABOVE CEILING SHOWING WORK OF ALL AFFECTED TRADES. DO NOT PROCEED WITH FABRICATION WORK UNTIL COORDINATION DRAWINGS HAVE BEEN APPROVED BY A/E.

   f. IN GENERAL ROUTE DUCTS/PIPES IN MOST EFFICIENT MANNER POSSIBLE, AND IN ACCORDANCE WITH INDUSTRY STANDARDS.

   g. SEE ELECTRICAL PLANS FOR EXACT LOCATION OF ELECTRICAL PANELS TO AVOID DUCTWORK AND PIPING RUNNING OVER THESE AREAS. COORDINATE WITH ELECTRICAL CONTRACTOR.

   h. LOCATE AIR DEVICES AS SHOWN. COORDINATE WITH OTHER TRADES TO AVOID CONFLICT AND ADJUST LOCATION IF NEEDED WITHOUT COMPROMISING AIR DEVICES PERFORMANCE.

5. CONTROLS:
   a. REFER TO SPECIFICATIONS FOR CONTROL COMPONENTS AND DEVICES TO BE COORDINATED WITH MECHANICAL WORK.

   b. DRAWINGS SHOW GENERAL LOCATION OF THERMOSTATS. UNLESS NOTED OTHERWISE, INSTALL THERMOSTATS AT 48" ABOVE FINISHED FLOOR. WIRING SHALL BE IN CONCEALED WALLS. IN CASE OF CONFLICTS WITH FURNITURE, WINDOWS, ETC., COORDINATE EXACT LOCATION WITH ARCHITECT AND ENGINEER.

EQUIPMENT:

1. EQUIPMENT INSPECTION:
   a. FIELD VERIFY ALL CONDITIONS AND MEASURE DIMENSIONS WITHIN THE BUILDING PRIOR TO ORDERING EQUIPMENT AND/OR PROCEEDING WITH INSTALLATION.

   b. ALL EQUIPMENT SHALL BE FACTORY TESTED, AND CONTRACTOR SHALL VERIFY EQUIPMENT CONDITION PRIOR TO INSTALLATION. CONTRACTOR IS RESPONSIBLE FOR EQUIPMENT DAMAGED DURING MOVING AND INSTALLATION.

   c. EQUIPMENT FOUND DEFECTIVE PRIOR TO FINAL ACCEPTANCE SHALL BE REPLACED AT NO COST TO OWNER.

2. EQUIPMENT ACCESS:
   a. FOR EQUIPMENT WHICH MAY REQUIRE PERIODIC SERVICING (SUCH AS AIR HANDLERS) AND WHICH IS LOCATED ABOVE A SUSPENDED CEILING, CONTRACTOR IS TO PROVIDE A MARKER ON CEILING GRID WHICH CLEARLY INDICATES WHICH CEILING TILE IS TO BE REMOVED TO MOST CONVENIENTLY ACCESS EQUIPMENT SIDE NEEDING SERVICING. THE MARKER IS TO BE ROUND DOT OF HEAVY DUTY COLORED PAPER, WITH DIRECTION INDICATION, WITH ADHESIVE BACKING. OBTAIN OWNER APPROVAL FOR COLOR, SIZE, AND TYPE PRIOR TO INSTALLATION.

   b. INSTALL ALL DAMPERS, FANS, ETC. IN ACCESSIBLE LOCATIONS. PROVIDE ADEQUATELY SIZED ACCESS DOORS WHERE REQUIRED.

3. EQUIPMENT INSTALLATION:
   a. PROVIDE SPRING HANGER TYPE VIBRATION ISOLATORS TO SUPPORT SUSPENDED AHUS, FANS AND OTHER POWERED VIBRATING EQUIPMENT. PROVIDE FLEXIBLE DUCT CONNECTORS.

   b. FOR ALL AIR CONDITIONING UNITS WHICH ARE LOCATED ABOVE SUSPENDED CEILINGS, OR ABOVE HARDWOOD FLOORS, OR OTHER BUILDING SURFACES / MATERIALS WHICH COULD BE DAMAGED BY LEAKING WATER, PROVIDE A SECONDARY DRAIN PAN BENEATH THE UNIT, WITH EITHER: A) A SEPARATE CONDENSATE DRAIN LINE, COPPER, INSULATED WITH 1/2" ARMAFLEX, AND PIPED TO A SUITABLE DISPOSAL POINT (SUCH AS TO A LAVATORY DRAIN TAILPIECE, FLOOR DRAIN, ETC; DO NOT TERMINATE SECONDARY DRAIN PIPE THROUGH A SUSPENDED CEILING WHERE IT WILL DRIP INTO A SINK OR LAVATORY UNLESS APPROVED BY ENGINEER); OR B) A FLOAT SWITCH OR MOISTURE SENSING SWITCH, LOCATED IN SECONDARY DRAIN PAN, AND ELECTRICALLY INTERLOCKED WITH UNIT FAN TO TURN UNIT OFF WHEN MOISTURE IS SENSED.

   c. COMPLETELY WEATHERPROOF ALL EQUIPMENT, DUCTS, PIPES AND OTHER DEVICES AND MATERIALS INSTALLED OUTSIDE THE BUILDING, IN PARKING AREA, OR OTHERWISE EXPOSED TO WEATHER. AS A MINIMUM, WEATHERPROOFING SHALL INCLUDE, BUT IS NOT LIMITED TO THE FOLLOWING: JACKETING FOR ALL PIPING INSULATION, VALVES AND ACCESSORIES RATED FOR OUTDOOR SERVICE, ELECTRICAL ENCLOSURES NEMA 4X-SS. PROVIDE ELECTRICAL HEAT TRACING FOR UTILITIES SUSCEPTIBLE TO FREEZING.

   d. AFFIX ID TAGS TO ALL MECHANICAL EQUIPMENT PER SPECIFICATIONS.

4. EQUIPMENT INSULATION:
   a. INSULATE ALL SURFACES THAT ARE CAPABLE OF BECOMING COLD AND COLLECTING CONDENSATE. THIS INCLUDES SUPPLY DIFFUSERS AND CONNECTING DUCTWORK / TRANSITION PIECES.

5. PLUMBING:
   a. PROVIDE CODE RECOMMENDED CLEARANCE OR MINIMUM 10' BETWEEN EXHAUST FANS DISCHARGES, PLUMBING VENTS AND AIR INTAKES. COORDINATE LOCATIONS WITH PLUMBING CONTRACTOR.

   b. PROVIDE INSULATED AND TRAPPED CONDENSATE DRAIN LINES FROM ALL AIR CONDITIONING EQUIPMENT AND TERMINATE TO NEAREST FLOOR DRAIN OR OTHER APPROVED RECEPTACLES. COORDINATE DRAINS WITH PLUMBING.

6. ELECTRICAL:
   a. CONTRACTOR IS RESPONSIBLE FOR COORDINATION WITH ELECTRICAL CONTRACTOR REGARDING EQUIPMENT SIZES AND TYPES OF ELECTRICAL INTERFACE EQUIPMENT REQUIRED.

   b. DUE TO VARIATIONS IN EQUIPMENT CHARACTERISTICS BY DIFFERENT EQUIPMENT SUPPLIERS, MECHANICAL EQUIPMENT ULTIMATELY PROVIDED MAY DIFFER IN HORSEPOWER OR AMPERAGE REQUIREMENTS FROM THAT SPECIFIED IN THESE DRAWINGS. COORDINATE WITH GENERAL CONTRACTOR PRIOR TO BIDDING, AND PRIOR TO SUBMITTALS AND ORDERING EQUIPMENT, TO ENSURE THAT EQUIPMENT ELECTRICAL REQUIREMENTS ARE CONVEYED TO ELECTRICAL CONTRACTOR. IT IS SOLELY CONTRACTOR'S RESPONSIBILITY TO ENSURE COMPATIBILITY ISSUES ARE COORDINATED.

DUCTWORK:

1. DUCTWORK GENERAL:
   a. DRAWINGS ARE DIAGRAMMATIC IN NATURE. FOR CLARITY SAKE, MOST DUCT OFFSETS/RISES/DROPS ARE NOT SHOWN. WHERE DUCTS PENETRATE WALLS, INSTALL THEM PERPENDICULAR TO WALL.

   b. RECTANGULAR AND ROUND DUCTWORK SHALL BE GALVANIZED STEEL. SIZES SHOWN ARE INSIDE CLEAR DIMENSION, UNLESS NOTED OTHERWISE.

   c. VERIFY BOTTOM OF DUCT ELEVATION AND COORDINATE WITH OTHER TRADES.

   d. CONSTRUCT AND LEAKAGE TEST ALL DUCTWORK BASED ON SPECIFICATIONS AND SMACNA REQUIREMENTS, WHICHEVER IS MORE STRINGENT. COORDINATE PRESSURE CLASSES WITH EQUIPMENT SCHEDULES.

   e. FLEXIBLE DUCTS MAXIMUM LENGTH SHALL NOT EXCEED 6 FEET. USE OF FLEXIBLE DUCTWORK IS LIMITED TO AREAS WITH AN ACCESSIBLE SUSPENDED CEILING. PINCHED DUCT WILL HAVE TO BE REPLACED.

   f. IN AREAS WHERE DUCT CONFLICTS CANNOT BE AVOIDED, ROUTE SMALLER DUCTS THROUGH ROOF JOISTS.

   g. LOCATE AIR DEVICES AS SHOWN. COORDINATE WITH ELECTRICAL, IF NEEDED. RELOCATE DIFFUSER TO ADJACENT TILE.

2. DUCTWORK INSULATION:
   a. WRAP ALL OUTSIDE AIR, SUPPLY AND RETURN DUCTWORK UNLESS NOTED OTHERWISE.

   b. IN ADDITION, FOR ACOUSTICAL PERFORMANCE INTERNALLY LINE FIRST 10' OF SUPPLY AND LAST 10' OF RETURN DUCTWORK.

   c. PROVIDE ACOUSTICAL LINING FOR ALL TRANSFER DUCTS AND RETURN AIR ELBOWS.

   d. INSULATION ON DUCT SHOULD TO BE PROPERLY TAPED AND MASTICS MUST BE APPLIED ON SEAMS AND JOINTS AND AT ENDS ADJACENT TO DUCT FLANGES AND FITTINGS. FOR DUCT SIDES WITH DIMENSIONS LARGER THAN 18 INCHES, APPLY ADDITIONAL PINS AND CLIPS TO HOLD INSULATION TIGHTLY AGAINST SURFACE AT CROSS BRACING.

   e. INSULATE ALL EXHAUST DUCTWORK 10 FEET FROM EXTERIOR OPENING.

3. DUCT FITTINGS:
   a. WHERE RECTANGULAR TEE FITTINGS ARE SHOWN, PROVIDE FITTING WITH ADJUSTABLE DIVIDER SHEET AND TURNING VANES.

   b. WHERE RECTANGULAR MAIN AND BRANCH CONNECTIONS ARE SHOWN, PROVIDE EXTRACTOR VANES. NOT APPLICABLE TO DUCTWORK DOWNSTREAM OF VAV BOXES.

   c. PROVIDE TURNING VANES IN ALL ELBOWS PER SPECS.

4. DAMPERS:
   a. IN AN ACCESSIBLE LOCATION, PROVIDE MANUAL-TYPE VOLUME BALANCING DUCT DAMPERS IN ALL SUPPLY, RETURN AND EXHAUST DUCT BRANCHES TO INDIVIDUAL GRILLES, REGISTERS AND DIFFUSERS (GRD). TO MINIMIZE NOISE INSTALL DAMPERS CLOSER TO THE BRANCH CONNECTION THAN TO THE GRD. IN DUCTWORK, PROVIDE ACCESS DOORS TO ALL DAMPERS.

   b. ABOVE INACCESSIBLE CEILINGS AND IN CASE DUCT CONFIGURATION DOES NOT ALLOW FOR INSTALLATION OF DAMPER IN DUCTWORK, PROVIDE REMOTE MANUAL DAMPER BY YOUNG REGULATOR OR EQUAL, (CABLE OPERATED SYSTEM) WITH ENGINEER'S PERMISSION CONTRACTOR MAY PROVIDE VOLUME DAMPER THAT IS INTEGRAL TO GRD.

   c. PROVIDE BALANCING DAMPERS ON ALL EXHAUST GRILLES TO ACHIEVE DESIRED AIRFLOW.

   d. PROVIDE DYNAMIC FIRE DAMPERS (RUSKIN DIDB20, TYPE B OR EQUAL) IN ACCORDANCE WITH CODE REQUIREMENT, IN ALL PENETRATIONS OF FIRE RATED WALLS, OCCUPANCY SEPARATION WALLS, BARRIERS AND PARTITIONS, AND EXIT CORRIDORS. REFER TO ARCHITECTURAL PLANS FOR RATED WALLS. PROVIDE ACCESS DOORS AS PER CODE REQUIREMENTS, EQUAL TO RUSKIN ADH-22 FOR RECTANGULAR DUCT, ACUDOR RD FOR ROUND DUCT. WHERE GRILLE ACCESS IS INDICATED, ADDITIONAL DUCT ACCESS DOOR IS NOT REQUIRED. WHERE THE CEILING IS FIRE RATED PROVIDE FIRE RATED AIR DEVICES FOR TRANSFER & RETURN AIR GRILLES AND SUPPLY AIR DIFFUSERS AS PER CODE REQUIREMENTS. REFER TO ARCHITECTURAL PLANS FOR RATED CEILINGS.

   e. PROVIDE ACCESS DOORS (NOT SHOWN IN DRAWINGS) FOR INSPECTION OF DUCT MOUNTED EQUIPMENT SUCH AS FIRE/SMOKE DAMPERS, MANUAL BALANCING DAMPERS AND TURNING VANES. IN AREAS WITH HARD CEILING COORDINATE ACCESS DOOR LOCATIONS AND CEILING ACCESS PANELS WITH OTHER TRADES.

INSULATION:

1. FIBERGLASS INSULATION MAY NOT BE USED ON ANY COLD PIPING SURFACES; ONLY CLOSED CELL INSULATION IS ACCEPTABLE.

2. PROVIDE INSULATION ON ALL SURFACES CAPABLE OF CREATING CONDENSATION.

MECHANICAL SYMBOLS LEGEND

12"x12"	DUCT SIZE: FIRST FIGURE IS SIDE SHOWN	T	THERMOSTAT
(12"x12")	BELOW DUCT SIZE: FIRST FIGURE IS SIDE SHOWN	RH	SPACE HUMIDITY SENSOR
	DIRECTION OF FLOW-RETURN	RH	DUCT HUMIDITY SENSOR
	DIRECTION OF FLOW-SUPPLY	SP	STATIC PRESSURE SENSOR
FD	FIRE DAMPER	CD	CONDENSATE PIPING
8"ø	FLEXIBLE DUCT	8"ø	HARD DUCT
EG-X / cfm	EXHAUST AIR GRILLE	RA, MD, OA	OUTSIDE AIR DUCT WITH MOTORIZED DAMPER AND MANUAL DAMPER
RG-X/TG-X / cfm	RETURN AIR/TRANSFER AIR GRILLE		
SD-X / cfm	SUPPLY AIR DIFFUSER		
SA	SIDE TAP WITH MANUAL DAMPER		
	BACKDRAFT DAMPER		

ABBREVIATIONS

A	AMPS	CU	CONDENSING UNIT	FCU	FAN COIL UNIT	HVAC	HEAT., VENT., & AIR CONDITION.	SA	SUPPLY AIR	N.T.S.	NOT TO SCALE
ACT	ACTUATOR	CU.	COPPER	FD	FLOOR DRAIN OR FIRE DAMPER	LCU	LOCAL CONTROL UNIT	SD	SUPPLY DIFFUSER	OA	OUTSIDE AIR
A.F.F.	ABOVE FINISHED FLOOR	DDC	DIRECT DIGITAL CONTROLS	FM	FLOW METER	LVG.	LEAVING	SS	STAINLESS STEEL	PCU	PRIMARY CONTROL UNIT
B.	BOTTOM	DMPR.	DAMPER	FS	FLOW SWITCH	MECH	MECHANICAL	SZ	SINGLE ZONE	PH	PHASE
BOP	BOTTOM OF PIPE	DISC.	DISCONNECT	FPI	FINS PER INCH	MOT. STRTR.	MOTOR STARTER	TAB	TESTING & BALANCING	RA	RETURN AIR
BOTT.	BOTTOM	DX	DIRECT EXPANSION COOLING	G.	GROUND	MS	MOTOR STARTER	TS	TEMPERATURE SENSOR	RG	RETURN GRILLE
C.	CONDUIT OR COMMON	EAG	EXHAUST AIR GRILLE	GA.	GAGE	OA	OUTSIDE AIR	TSTAT	THERMOSTAT	V	VOLTS
CLG.	CEILING OR COOLING	EF	EXHAUST FAN	GALV.	GALVANIZED	RD	ROOF DRAIN	UG	UNDERGROUND	VAV	VARIABLE AIR VOLUME
COMB.	COMBINATION	EMS	ENERGY MANAGEMENT SYSTEM	GRND.	GROUND	RM.	ROOM	MD	MOTORIZED DAMPER	VFD	VARIABLE FREQUENCY DRIVE
CONC.	CONCRETE	ENT.	ENTERING	HP	HORSEPOWER	RPZ	REDUCED PRESSURE ZONE	NC	NORMALLY CLOSED	W	WIRE
COND.	CONDUIT	EXT.	EXTERNAL OR EXTERIOR	HS	HUMIDITY SENSOR	RTU	ROOFTOP UNIT	NO	NORMALLY OPEN		

NO:	REVISION:	BY:

COPY NO.

HVAC UPGRADES AT BROWNSVILLE ANIMAL REGULATION AND CARE FACILITY

OLMITO, TEXAS

F.M. 511

ethos engineering
1126 SOUTH COMMERCE ST.
HARLINGEN, TX
PHONE: 956-230-3435
TEXAS REGISTERED
ENGINEERING FIRM
F-15998

DATE:	MARCH 23. 2026
CHECKED BY:	C.A.G.
DRAWN BY:	P.M.
PROJECT NO.:	24v67
CAD FILE:	-
SHEET:	M1.0

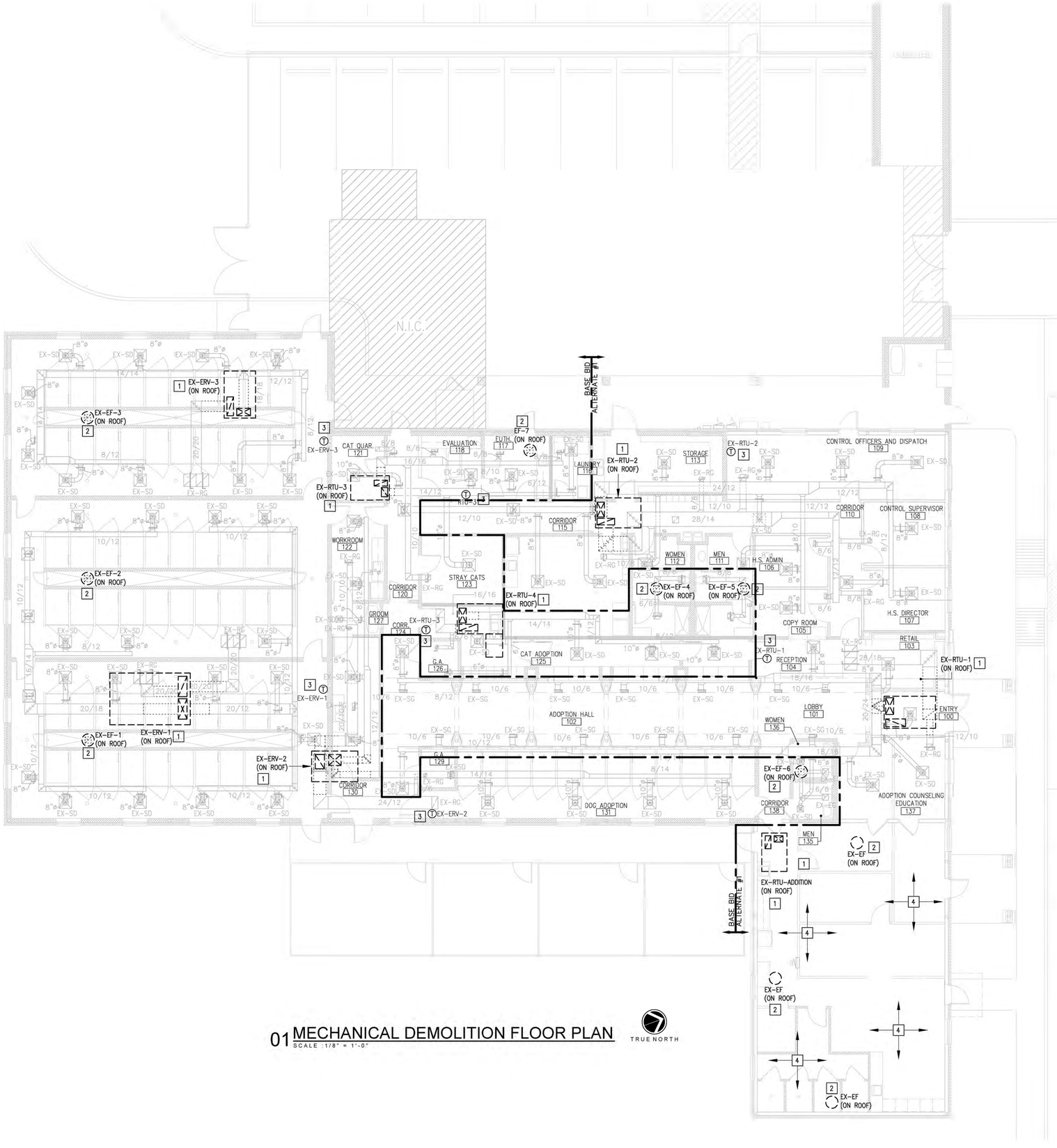

01 MECHANICAL DEMOLITION FLOOR PLAN
SCALE: 1/8" = 1'-0"

MECHANICAL DEMOLITION GENERAL NOTES:

1. OWNER MAY WISH TO KEEP DEMOLISHED EQUIPMENT AND MATERIALS. COORDINATE WITH OWNER, AND DISPOSE OF EQUIPMENT AND MATERIALS THAT OWNER DOES NOT RETAIN.
2. DEMOLISH EXISTING CURBS AND CURB ADAPTORS. COORDINATE WORK WITH ROOFING CONTRACTOR.
3. TEMPORARILY REMOVE EXISTING CEILING TILES AND GRID THAT ARE LOCATED UNDERNEATH THE FOOTPRINT OF THE EXISTING RTUS AND EXHAUST FANS SCHEDULED TO BE DEMOLISHED AND AS NECESSARY TO PROVIDE WORKING AREA FREE FROM OBSTACLES FOR THE STRUCTURAL REINFORCEMENT WORK REQUIRED TO ACCOMMODATE THE NEW RTUS, EXHAUST FANS, AND ASSOCIATED CURBS. COORDINATE WITH GENERAL, ROOFING AND STRUCTURAL CONTRACTORS. REINSTALL CEILING TILES AND GRID AFTER WORK ABOVE CEILING HAS BEEN COMPLETED.
4. PRIOR TO DEMOLITION, IN CEILINGS SCHEDULED TO BE REMOVED AS PER NOTE ABOVE, PREPARE REFLECTED CEILING PLAN SKETCH SHOWING LOCATIONS OF ALL CEILING COMPONENTS AND DEVICES TO BE RE-USED INCLUDING BUT NOT LIMITED TO: EXISTING LIGHT FIXTURES, SPEAKERS, FIRE ALARM DEVICES, EMERGENCY LIGHTING ETC. IF ANY OF THE ABOVE ITEMS ARE IN NON-WORKING CONDITION, SUBMIT A WRITTEN REPORT TO OWNER/ENGINEER.

MECHANICAL DEMOLITION KEYED NOTES:

1. DEMOLISH EXISTING DUCTWORK, TRANSITIONS, FITTINGS AND FLEX CONNECTORS UNDERNEATH THE EXISTING RTU AND WITHIN THE EXISTING CURB OPENING AS NECESSARY TO ACCOMMODATE NEW UNIT.
2. DEMOLISH EXISTING EF AND CONTROLS IN THIS APPROXIMATE LOCATION. COORDINATE WITH CONTROLS CONTRACTOR PRIOR TO DEMOLITION.
3. DEMOLISH EXISTING TEMPERATURE SENSORS AS SHOWN. REFER TO NEW PLAN FOR MORE INFORMATION. (TYPICAL)
4. DEMOLISH EXISTING DUCTWORK AND ASSOCIATED AIR DEVICES AS SHOWN. REFER TO NEW PLAN FOR MORE INFORMATION.

LEGEND	
	EXISTING EQUIPMENT TO BE DEMOLISHED
6x6	EXISTING DUCTWORK TO BE DEMOLISHED
6x6	EXISTING DUCTWORK TO REMAIN
	EXISTING AIR DEVICES TO REMAIN
T	EXISTING T-STAT TO BE DEMOLISHED

NO:	REVISION:	BY:

COPY NO:

STATE OF TEXAS
CESAR A. GONZALEZ
108611
LICENSED PROFESSIONAL ENGINEER
03.23.2026

HVAC UPGRADES AT BROWNSVILLE ANIMAL REGULATION AND CARE FACILITY

OLMITO, TEXAS

F.M. 511

ethos engineering
1126 SOUTH COMMERCE ST.
HARLINGEN, TX
PHONE: 956-230-3435
TEXAS REGISTERED
ENGINEERING FIRM
F-15598

DATE:	MARCH 23. 2026
CHECKED BY:	C.A.G.
DRAWN BY:	P.M.
PROJECT NO.:	24v67
CAD FILE:	-
SHEET:	M2.1

MECHANICAL DEMOLITION GENERAL NOTES:

1. OWNER MAY WISH TO KEEP DEMOLISHED EQUIPMENT AND MATERIALS. COORDINATE WITH OWNER, AND DISPOSE OF EQUIPMENT AND MATERIALS THAT OWNER DOES NOT RETAIN.
2. DEMOLISH EXISTING CURBS AND CURB ADAPTORS. COORDINATE WORK WITH ROOFING CONTRACTOR.

MECHANICAL DEMOLITION KEYED NOTES:

1. DEMOLISH EXISTING ROOF TOP UNIT (RTU) AND ASSOCIATED CURB, CURB ADAPTER AND CONTROLS WIRING INCLUDING SENSORS IN THIS APPROXIMATE LOCATION. REFER TO ELECTRICAL NOTES FOR WORK RELATED TO DISCONNECTS, CONDUITS, WIRING, ETC.
2. DEMOLISH EXISTING DUCTWORK, TRANSITIONS, FITTINGS AND FLEX CONNECTORS UNDERNEATH THE EXISTING RTU AND WITHIN THE EXISTING CURB OPENING AS NECESARY TO ACCOMMODATE NEW UNIT.
3. DEMOLISH EXISTING EF AND CONTROLS IN THIS APPROXIMATE LOCATION. COORDINATE WITH CONTROLS CONTRACTOR PRIOR TO DEMOLITION.
4. DEMOLISH ALL EXISTING PIPING ASSOCIATED WITH THE ROOFTOP UNITS. SEE RENOVATION ROOF PLAN. (TYPICAL)

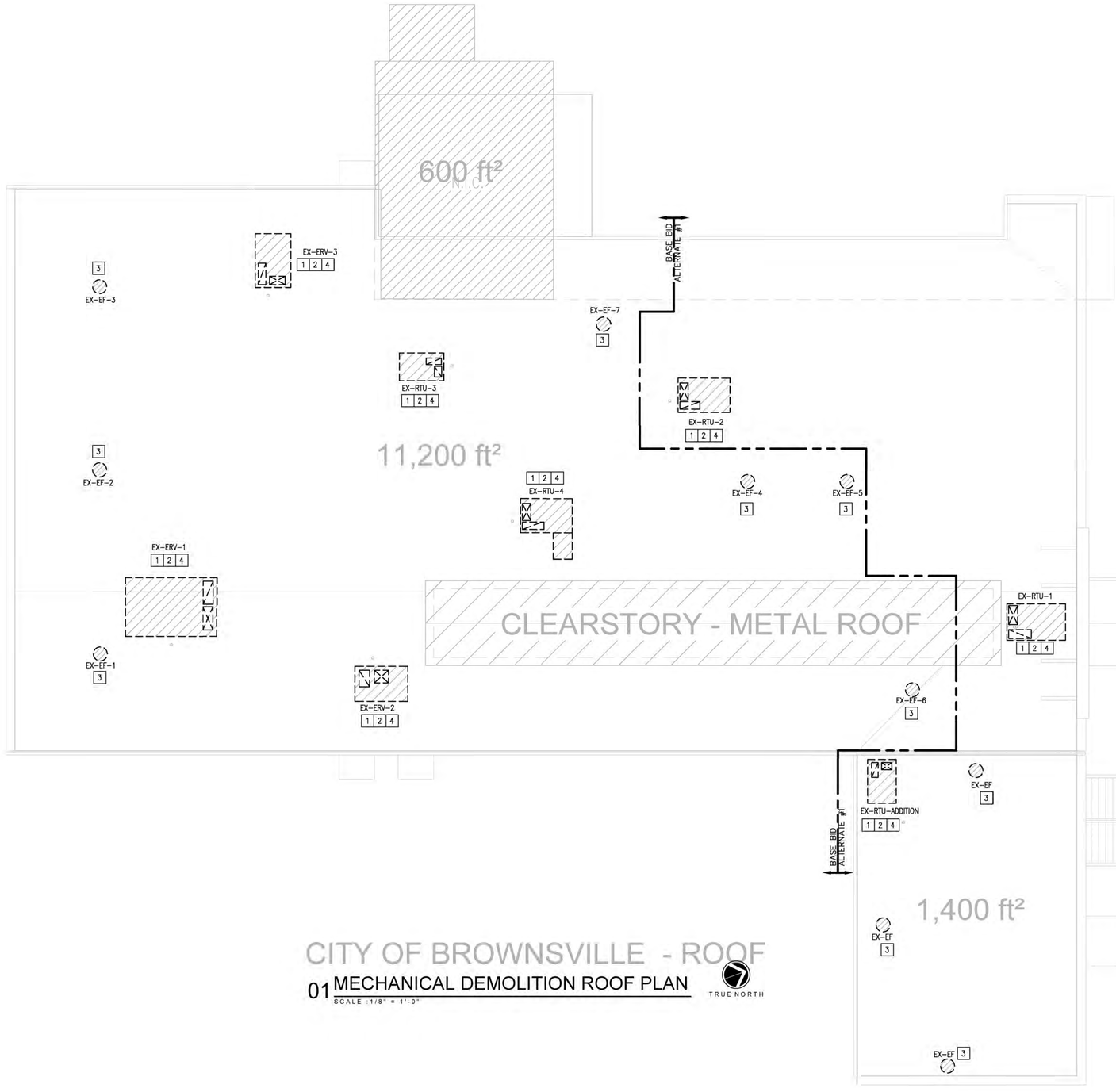

CITY OF BROWNSVILLE - ROOF

01 MECHANICAL DEMOLITION ROOF PLAN

SCALE : 1/8" = 1'-0"

TRUE NORTH

LEGEND	
	EXISTING ROOF EQUIPMENT TO BE DEMOLISHED

NO:	REVISION:	BY:

COPY NO:

STATE OF TEXAS
CESAR A. GONZALEZ
108611
LICENSED
PROFESSIONAL ENGINEER
03.23.2026

HVAC UPGRADES AT BROWNSVILLE ANIMAL REGULATION AND CARE FACILITY

OLMITO, TEXAS

F.M. 511

ethos engineering
1126 SOUTH COMMERCE ST.
HARLINGEN, TX.
PHONE: 956-230-3435
TEXAS REGISTERED ENGINEERING FIRM
F-15998

DATE:	MARCH 23. 2026
CHECKED BY:	C.A.G.
DRAWN BY:	P.M.
PROJECT NO.:	24v67
CAD FILE:	-
SHEET:	M2.2

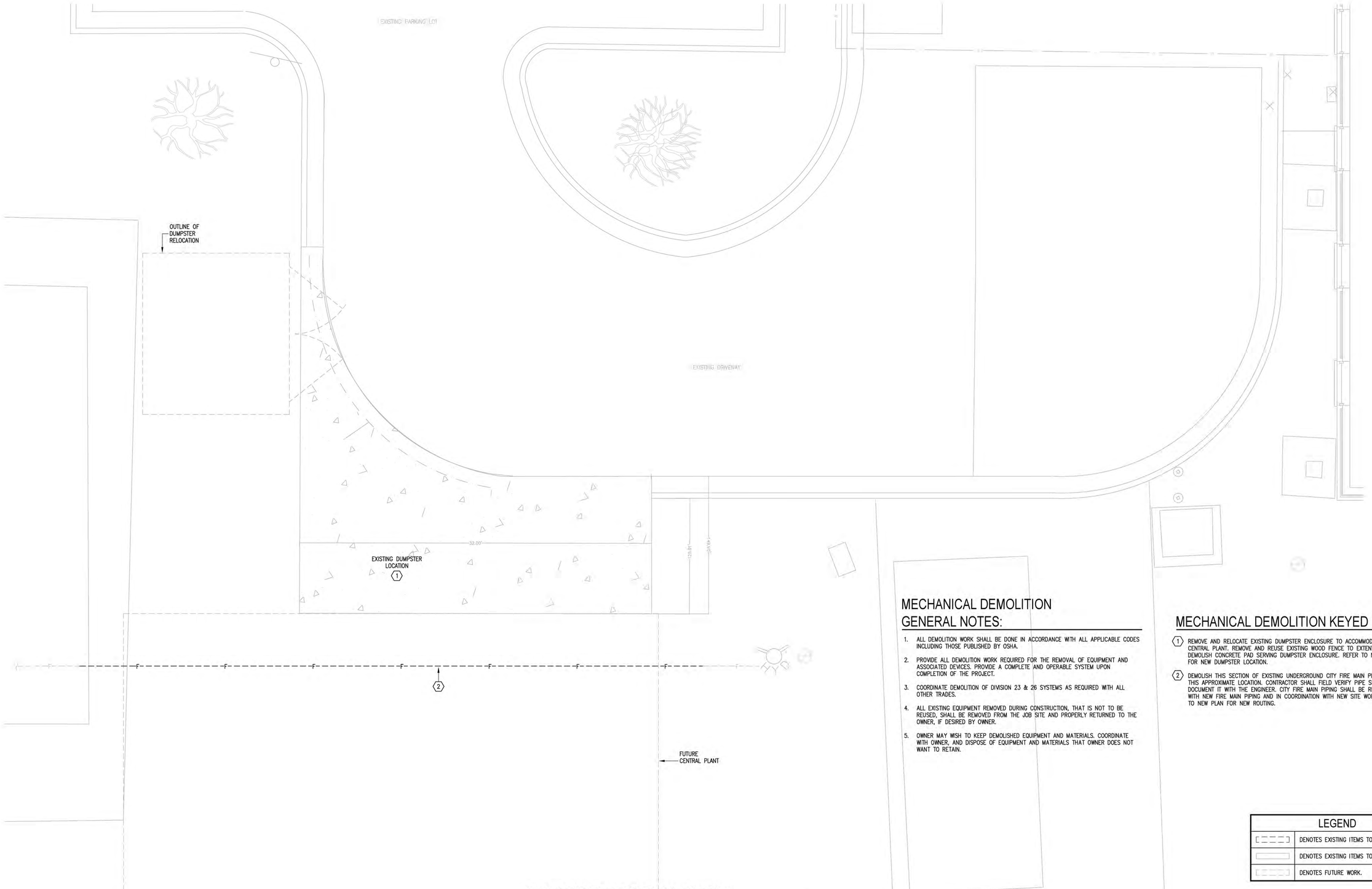

01 ENLARGED CENTRAL PLANT DEMOLITION PLAN

SCALE :1/4" = 1'-0"

TRUE NORTH

MECHANICAL DEMOLITION GENERAL NOTES:

1. ALL DEMOLITION WORK SHALL BE DONE IN ACCORDANCE WITH ALL APPLICABLE CODES INCLUDING THOSE PUBLISHED BY OSHA.
2. PROVIDE ALL DEMOLITION WORK REQUIRED FOR THE REMOVAL OF EQUIPMENT AND ASSOCIATED DEVICES. PROVIDE A COMPLETE AND OPERABLE SYSTEM UPON COMPLETION OF THE PROJECT.
3. COORDINATE DEMOLITION OF DIVISION 23 & 26 SYSTEMS AS REQUIRED WITH ALL OTHER TRADES.
4. ALL EXISTING EQUIPMENT REMOVED DURING CONSTRUCTION, THAT IS NOT TO BE REUSED, SHALL BE REMOVED FROM THE JOB SITE AND PROPERLY RETURNED TO THE OWNER, IF DESIRED BY OWNER.
5. OWNER MAY WISH TO KEEP DEMOLISHED EQUIPMENT AND MATERIALS. COORDINATE WITH OWNER, AND DISPOSE OF EQUIPMENT AND MATERIALS THAT OWNER DOES NOT WANT TO RETAIN.

MECHANICAL DEMOLITION KEYED NOTES:

1. REMOVE AND RELOCATE EXISTING DUMPSTER ENCLOSURE TO ACCOMMODATE NEW CENTRAL PLANT. REMOVE AND REUSE EXISTING WOOD FENCE TO EXTENT POSSIBLE. DEMOLISH CONCRETE PAD SERVING DUMPSTER ENCLOSURE. REFER TO NEW PLAN FOR NEW DUMPSTER LOCATION.
2. DEMOLISH THIS SECTION OF EXISTING UNDERGROUND CITY FIRE MAIN PIPING AT THIS APPROXIMATE LOCATION. CONTRACTOR SHALL FIELD VERIFY PIPE SIZE AND DOCUMENT IT WITH THE ENGINEER. CITY FIRE MAIN PIPING SHALL BE REPLACED WITH NEW FIRE MAIN PIPING AND IN COORDINATION WITH NEW SITE WORK. REFER TO NEW PLAN FOR NEW ROUTING.

LEGEND	
[- - - -]	DENOTES EXISTING ITEMS TO BE DEMOLISHED.
[———]	DENOTES EXISTING ITEMS TO REMAIN.
[- - - -]	DENOTES FUTURE WORK.

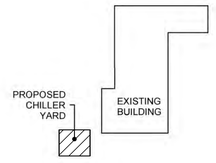

NO:	REVISION:	BY:

COPY NO:

STATE OF TEXAS
CESAR A. GONZALEZ
108611
LICENSED
PROFESSIONAL ENGINEER
03.23.2026

HVAC UPGRADES AT BROWNSVILLE ANIMAL REGULATION AND CARE FACILITY

OLMITO, TEXAS

F.M. 511

ethos engineering
1126 SOUTH COMMERCE ST.
HARLINGEN, TX
PHONE: 956-230-3435
TEXAS REGISTERED
ENGINEERING FIRM
F-15998

DATE:	MARCH 23. 2026
CHECKED BY:	C.A.G.
DRAWN BY:	P.M.
PROJECT NO.:	24v67
CAD FILE:	-
SHEET:	M2.3

MECHANICAL GENERAL NOTES:

1. PRIOR TO LABELING EQUIPMENT, COORDINATE DESIGNATION AND IDENTIFICATION WITH OWNER AND BUILDING AUTOMATION SYSTEM.

MECHANICAL KEYED NOTES:

1. CODE AND WORKING CLEARANCE FOR ELECTRICAL PANELS. DO NOT ROUTE DUCT OR PIPING DIRECTLY ABOVE ELECTRICAL EQUIPMENT FOOTPRINT. SEE ELECTRICAL PLANS FOR EXACT LOCATION. (TYPICAL)
2. PROVIDE RTU ON ROOF AS SCHEDULED. REFER TO MECHANICAL ROOF PLAN FOR MORE INFORMATION.
3. CONNECT NEW DUCTWORK INTO EXISTING DUCTWORK AT THIS APPROXIMATE LOCATION.
4. DUCTWORK ROUTING SHOWN IS DIAGRAMMATIC IN NATURE. FIELD-VERIFY STRUCTURE AND SPACE AVAILABILITY PRIOR TO SUBMITTING SHOP DRAWINGS. COORDINATE WITH ARCHITECT AND ENGINEER IN CASE OF CONFLICTS. (TYPICAL)
5. SLEEVE ALL PENETRATIONS PER SPECIFICATIONS. SEAL AROUND PIPING WITH FIRE PROOF CAULKING. PROVIDE ESCUTCHEON PLATES AND FLASHING AROUND PENETRATION BOTH INSIDE AND OUTSIDE TO PROVIDE FINISHED LOOK.
6. PROVIDE THERMOSTAT, RH, AND CO2 SENSORS WHERE INDICATED. INSTALL 48" A.F.F. COORDINATE WITH ARCHITECT AND OWNER TO MEET ADA REQUIREMENTS. PROVIDE CLEAR LOCKING COVER FOR ALL SENSORS. (TYPICAL)
7. PROVIDE EXHAUST FAN AS SCHEDULED. SEE ASSOCIATED DETAIL ON DETAIL SHEET.
8. PROVIDE EXHAUST DUCT DOWN FROM ROOF AT THIS APPROXIMATE LOCATION. PROVIDE DUCT TRANSITIONS, FITTINGS, AND ACCESSORIES. PROVIDE BALANCING DAMPER.
9. ROUTE DUCT UP TO BETWEEN JOISTS TO AVOID CONFLICT AT DUCT CROSSING. COORDINATE WITH EXISTING STRUCTURAL.
10. REFER TO SPECIFICATIONS FOR DDC CONTROLS AND SEQUENCES OF OPERATION. MOUNT DDC PANELS AT THIS APPROXIMATE LOCATION. PROVIDE A DEDICATED DDC PANEL FOR EVERY HYDRONIC ROOFTOP UNIT. FIELD VERIFY EXISTING CONDITIONS AND AVAILABLE WALL SPACE PRIOR TO ORDERING DDC PANELS. COORDINATE WITH GENERAL CONTRACTOR.
11. PROVIDE EXTERNAL SPEED CONTROLLER TO SERVE ROOF MOUNTED EXHAUST FAN AS SCHEDULED. MOUNT SPEED CONTROLLER ABOVE CEILING DIRECTLY BELOW ASSOCIATED EXHAUST FAN ON ROOF. REFER TO ASSOCIATED DETAIL ON DETAILS SHEET.

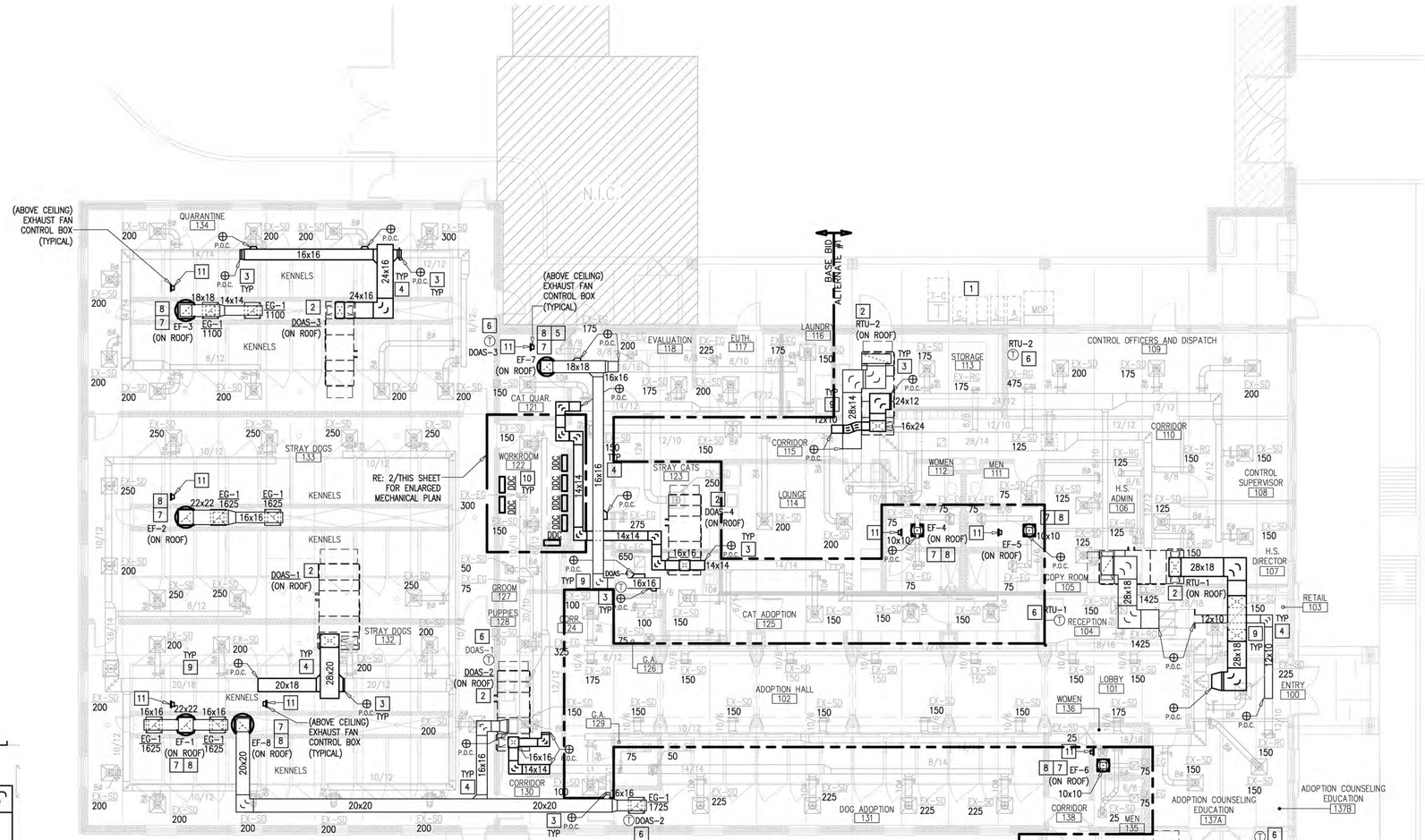

01 MECHANICAL RENOVATION FLOOR PLAN

SCALE : 1/8" = 1'-0"

TRUE NORTH

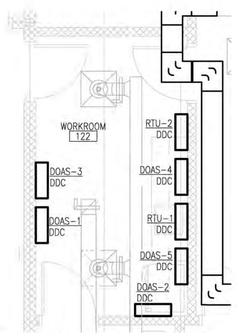

02 PARTIAL ENLARGED MECHANICAL RENOVATION FLOOR PLAN

SCALE : 1/4" = 1'-0"

TRUE NORTH

LEGEND	
	NEW ROOF EQUIPMENT TO BE INSTALLED
6x6	EXISTING DUCTWORK TO REMAIN
6x6	NEW DUCTWORK
	EXISTING AIR DEVICE TO REMAIN
	NEW AIR DEVICE TO BE INSTALLED
	PIPING TO BE INSTALLED
T RH	NEW T-STAT AND RH SENSORS TO BE INSTALLED

NO: REVISION: BY:

COPY NO:

STATE OF TEXAS
CESAR A. GONZALEZ
108611
LICENSED
PROFESSIONAL ENGINEER
03.23.2026

HVAC UPGRADES AT BROWNSVILLE ANIMAL REGULATION AND CARE FACILITY

OLMITO, TEXAS

F.M. 511

ethos engineering
1126 SOUTH COMMERCE ST.
HARLINGEN, TX
PHONE: 956-230-3435
TEXAS REGISTERED ENGINEERING FIRM F-15998

DATE: MARCH 23. 2026
CHECKED BY: C.A.G.
DRAWN BY: P.M.
PROJECT NO.: 24v67
CAD FILE: -
SHEET: M3.1

MECHANICAL KEYED NOTES:

1. PROVIDE CHWRTU ON NEW ROOF CURB AS SCHEDULED. ORIENT CWRTU AS INDICATED TO OPTIMIZE DUCTWORK. SEAL ALL OPENINGS AND ENSURE THAT INSTALLATION IS WEATHER-TIGHT. SECURE EQUIPMENT TO ROOF STRUCTURE. ATTACHMENTS SHALL BE CAPABLE OF WITHSTANDING THE LOCAL WIND PRESSURES. PROVIDE WINDSTORM CERTIFICATION OF CWRTU INSTALLATION. REFER TO DIV 7 FOR MORE INFORMATION.
2. PROVIDE DOAS RTU ON NEW ROOF CURB AS SCHEDULED. ORIENT DOAS RTU TO OPTIMIZE DUCTWORK. SEAL ALL OPENINGS AND ENSURE THAT INSTALLATION IS WEATHER-TIGHT. SECURE EQUIPMENT TO ROOF STRUCTURE. ATTACHMENTS SHALL BE CAPABLE OF WITHSTANDING THE LOCAL WIND PRESSURES. PROVIDE WINDSTORM CERTIFICATION OF DOAS RTU INSTALLATION. REFER TO DIV 7 FOR MORE INFORMATION.
3. CONNECT FULL SIZE DUCT WORK FROM CEILING SPACE BELOW TO NEW RTU S/A & R/A OPENINGS AS APPLICABLE. TRANSITION AS NECESSARY.
4. PROVIDE COPPER CONDENSATE DRAIN LINES WITH P-TRAPS, AND EXTEND TO EXISTING CONDENSATE DRAIN RECEPTOR ON ROOF. SUPPORT CONDENSATE PIPING WITH PIPING SUPPORTS AS DETAILED.
5. PROVIDE CHILLED WATER PIPING ON ROOF AS PER SPECIFICATIONS. INSTALL PIPING PER SPECIFICATIONS AND MANUFACTURER INSTRUCTIONS. PIPE SIZES ARE INDICATED IN CHILLED WATER SCHEMATIC RISER DIAGRAM.
6. PROVIDE ALUMINUM METAL JACKETING FOR ALL CHW PIPING EXPOSED OUTDOORS AND IN CENTRAL PLANT. INDOOR PIPING TO HAVE ALL SERVICE JACKETING WITH APPROPRIATE IDENTIFICATION. SEE SPECIFICATIONS.
7. PROVIDE PIPE SUPPORTS ON ROOF AS PER DETAILS AND SPECIFICATIONS. REFER TO ASSOCIATED DETAIL ON DETAILS SHEET.
8. PROVIDE NEW EXHAUST FAN ON NEW ROOF CURB AS SCHEDULED. REFER TO STRUCTURAL FOR STRUCTURAL REINFORCEMENT INFORMATION. ATTACHMENTS SHALL BE CAPABLE OF WITHSTANDING THE LOCAL WIND PRESSURES. CONNECT AND EXTEND AS NEEDED NEW EXHAUST DUCTWORK BELOW TO NEW EXHAUST FAN. PROVIDE WINDSTORM CERTIFICATION OF EXHAUST FAN INSTALLATION. SEE SCHEDULES AND DETAILS FOR MORE INFORMATION.
9. PROVIDE LINE SIZE ISOLATION VALVES TO SERVE HYDRONIC PIPING (SUPPLY & RETURN) CHS/CHR. INSTALL IN ACCESSIBLE LOCATIONS AT ALL BRANCH PIPING, AND AS INDICATED ON PLANS.
10. PROVIDE MANUAL ISOLATION VALVES AND BLIND FLANGE IN EVENT ALTERNATE #1 IS NOT ACCEPTED.

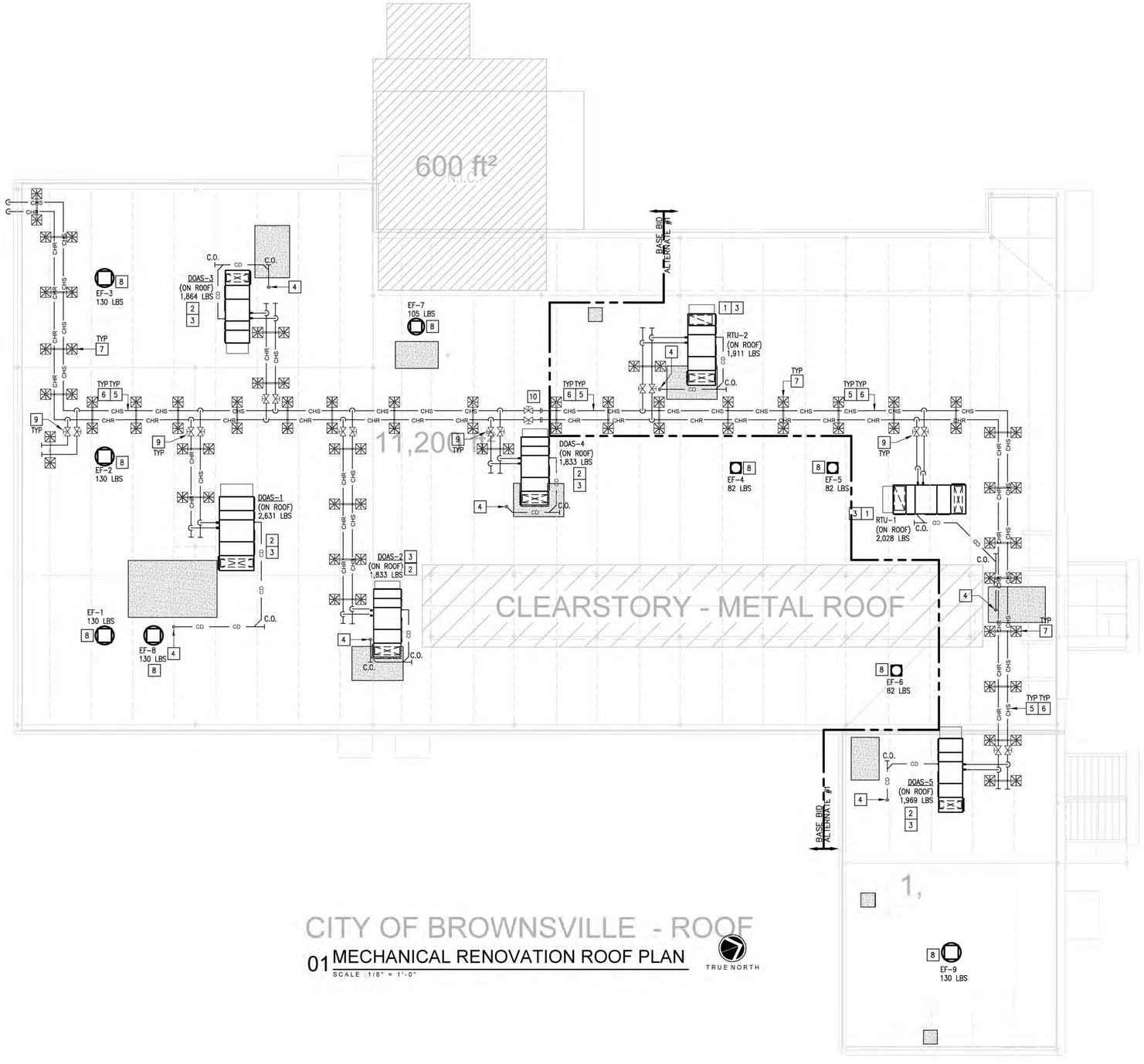

CITY OF BROWNSVILLE - ROOF

01 MECHANICAL RENOVATION ROOF PLAN

SCALE : 1/8" = 1'-0"

LEGEND	
	NEW ROOF EQUIPMENT TO BE INSTALLED
CHS CHS / CHR CHR	NEW CHS/CHR HYDRONIC PIPING TO BE INSTALLED
CD	NEW CONDENSATE PIPING TO BE INSTALLED
	NEW HYDRONIC PIPING MANUAL VALVE TO BE INSTALLED
	ROOF PATCHING AREA

NO:	REVISION:	BY:

COPY NO.

STATE OF TEXAS
CESAR A. GONZALEZ
108611
LICENSED
PROFESSIONAL ENGINEER
03.23.2026

HVAC UPGRADES AT BROWNSVILLE ANIMAL REGULATION AND CARE FACILITY

OLMITO, TEXAS

F.M. 511

ethos engineering
1126 SOUTH COMMERCE ST.
HARLINGEN, TX
PHONE: 956.230.3435
TEXAS REGISTERED
ENGINEERING FIRM
F-15595

DATE:	MARCH 23. 2026
CHECKED BY:	C.A.G.
DRAWN BY:	P.M.
PROJECT NO.:	24v67
CAD FILE:	-
SHEET:	M3.2

MECHANICAL GENERAL NOTES:

1. ALL PIPING WELDS MUST BE WIRE-BRUSHED AND PAINTED A MINIMUM OF 12" ON EITHER SIDE OF WELD PRIOR TO INSULATION.
2. AT LOWEST POINT IN PIPING ENTERING CHILLER BARRELS, PROVIDE 6" LONG DRAIN NIPPLES AND BALL VALVES FOR DRAINING NEW CHILLER.
3. INSULATE PER SPECIFICATIONS ALL PIPING, VALVES, FITTINGS, PUMP BODIES AND COLD SURFACES THAT ARE CAPABLE OF GENERATING CONDENSATION. FIBERGLASS INSULATION WILL NOT BE ALLOWED.
4. PRIOR TO INSTALLATION OF EQUIPMENT, VERIFY THAT MANUFACTURER RECOMMENDED AND CODE REQUIRED CLEARANCES ARE AVAILABLE.
5. INSTALL PIPES AND DUCTS AS HIGH AS POSSIBLE TO ALLOW MAXIMUM POSSIBLE HEADROOM. MIN. 10' A.F.F. OR AS HIGH AS POSSIBLE.
6. PROVIDE REFRIGERANT SIGNAGE, AND EMERGENCY CONTROLS AS PER SPECIFICATIONS AND AS PER REQUIREMENTS OF INTERNATIONAL MECHANICAL AND FIRE CODES.
7. PROVIDE P/T TEST PORT WITHIN 6 INCHES OF EVERY PRESSURE GAGE AND THERMOWELL. SEE PIPING SCHEMATIC FOR LOCATIONS.
8. REFER TO HYDRONIC PIPING SCHEMATICS FOR DETAILS AND PIPE SIZES.
9. PROVIDE PIPE STANCHION SUPPORTS AT SPECIFIED INTERVALS, CLOSE TO ELBOWS AND VALVES. PROVIDE CONCRETE PADS AS REQUIRED. RE: STRUCTURAL.
10. FOR ALL PIPING SUPPORTS LOCATED OUTDOORS, PROVIDE THE FOLLOWING:
    - A.) POLYAMIDE PRIME COAT OF DEVOE PAINTS, DEVRAN 201.
    - B.) INTERMEDIATE TOP COAT OF DEVOE PAINTS, DEVRAN 224HS.
    - C.) TOP COAT OF DEVOE PAINTS, DEVTHANE 379.

MECHANICAL KEYED NOTES:

1. CLEARANCE FOR ELECTRICAL PANELS. DO NOT ROUTE PIPING OVER THIS AREA. REFER TO ELECTRICAL PLANS FOR EXACT LOCATION OF ELECTRICAL ROOMS (TYPICAL).
2. PROVIDE ALUMINUM METAL JACKETING FOR ALL CHW PIPING EXPOSED OUTDOORS. SEE SPECIFICATIONS.
3. PROVIDE HYDRONIC PIPING WITH AUTOMATIC ISOLATION VALVES, THERMOWELLS, PRESSURE GAUGES, THERMOMETERS, FLOW SWITCHES, MANUAL VALVES, ETC. PROVIDE PIPING SPECIALTIES SUCH AS AIR SEPARATOR, EXPANSION TANK, MAKE UP WATER, CHEMICAL POT FEEDER, ETC. SEE PIPING SCHEMATIC AND ASSOCIATED DETAILS.
4. PROVIDE AIR SEPARATOR, EXPANSION TANK AND CHEMICAL POT FEEDER. INSTALL ON 4" HOUSEKEEPING CONCRETE PADS PROVIDED BY STRUCTURAL. PADS SHALL BE 6" LARGER ON ALL SIDES FOR ALL EQUIPMENT EXCEPT CHILLERS. REFER TO STRUCTURAL DRAWINGS.
5. PROVIDE CHILLER AS SCHEDULED. INSTALL CHILLER ON 6" HOUSEKEEPING CONCRETE PAD PROVIDED BY STRUCTURAL. PAD SHALL BE 12" LARGER ON ALL SIDES FOR CHILLERS. REFER TO STRUCTURAL DRAWINGS.
6. PIPE SUPPORTS AND STANCHIONS SHALL BE HOT DIPPED GALVANIZED AND PAINTED. BASE PLATE SHALL BE INSTALLED ON A 4" CONCRETE PAD. (TYPICAL)
7. PROVIDE ISOLATION VALVES TO SERVE CENTRAL PLANT.
8. LOCATE DDC PANEL AT THIS APPROXIMATE LOCATION. REFER TO SPECIFICATIONS FOR DDC CONTROLS AND SEQUENCES OF OPERATION.
9. PROVIDE VFD PER SCHEDULE WITH NEMA-3R ENCLOSURE FOR MOUNTING OUTDOORS. (TYPICAL)
10. PROVIDE MAKE UP WATER LINE 1" TO SERVE EXPANSION TANK. CONNECT TO BACKFLOW PREVENTER AND PRESSURE RELIEF VALVE. REFER TO "MAKE-UP DETAIL" ON DETAIL SHEET. COORDINATE WITH PLUMBING.
11. COORDINATE WITH WATER TREATMENT COMPANY TO ACHIEVE SPECIFIED WATER CONDITIONING. PROVIDE NEW FILTRATION SYSTEM AND DYE IN CHILLED WATER. SEE SPECIFICATION FOR ADDITIONAL INFORMATION.
12. PIPING UNDER CANOPY SHALL BE SUPPORTED FROM GROUND WITH PIPE SUPPORTS (NOT SHOWN FOR CLARITY). PROVIDE PIPE SUPPORTS AS PER SPECIFICATIONS. SUBMIT SHOP DRAWINGS WITH PIPE SUPPORT LOCATIONS FOR APPROVAL.
13. PROVIDE CONNECTIONS FOR EMERGENCY CHILLER TIE-IN.
14. PROVIDE FLOW METER AS PER SCHEMATICS AND SPECIFICATIONS. INSTALL AS PER MANUFACTURER RECOMMENDATIONS.
15. PROVIDE NEW DUMPSTER ENCLOSURE AT THIS APPROXIMATE LOCATION. INSTALL ON CONCRETE PAD BY STRUCTURAL.
16. PROVIDE UNDERGROUND CHILLED WATER PIPING AS PER SPECIFICATIONS.
17. CONNECT NEW UNDERGROUND CITY FIRE MAIN PIPING INTO EXISTING CITY FIRE MAIN PIPING AT THIS APPROXIMATE LOCATION. CONTRACTOR SHALL FIELD VERIFY PIPE SIZE AND DOCUMENT IT WITH THE ENGINEER. ROUTE NEW CITY FIRE MAIN PIPING AS SHOWN TO ACCOMMODATE NEW CENTRAL PLANT. COORDINATE WITH GENERAL CONTRACTOR.

PLUMBING KEYED NOTES:

1. PROVIDE BRONZE ISOLATION BALL VALVE.
2. PROVIDE A RPZ TYPE BACKFLOW PREVENTER (BFP) WILKINS MODEL #975XL2 OR APPROVED EQUAL. INSTALL MOUNTED ON SUPPORTS IN WATER LINE SERVING MAKE UP WATER. PROVIDE A MINIMUM OF 3" CLEARANCE IN FRONT OF BFP FOR TESTING AND SERVICE. PROVIDE DRAIN RECEPTOR UNDER BFP AND RUN COPPER LINE TO NEARBY DRY WELL. SEE ASSOCIATED DETAIL ON DETAIL SHEET FOR CONCRETE PIPE SUPPORT AND BFP.
3. PROVIDE A PRESSURE REDUCING VALVE (PRV) WATTS SERIES LFU5B OR APPROVED EQUAL. REFER TO ASSOCIATED DETAIL ON DETAILS SHEET.
4. PROVIDE DRYWELL TO SERVE BACK-FLOW PREVENTER DRAIN LINE. SEE ASSOCIATE DETAIL ON DETAIL SHEET.
5. EXTEND 1" DOMESTIC WATER LINE AND CONNECT TO EXISTING DOMESTIC WATER PIPING INSIDE BUILDING. CONNECT TO EXISTING 1" DOMESTIC WATER PIPING OR LARGER.
6. PROVIDE HOSE BIBB ZURN #195 EXPOSED TYPE, MILD CLIMATE, ANTICONTAMINATION WALL FAUCET WITH 3/4" MALE HOSE CONNECTION AND ANTI-SIPHON VACUUM BREAKER. COORDINATE MOUNTING HEIGHT WITH OWNER PRIOR INSTALLATION -TYPICAL.

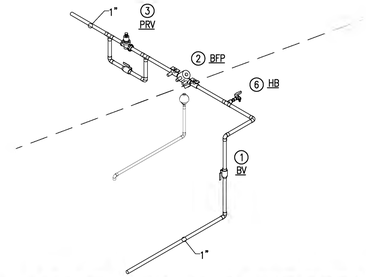

02 MAKE-UP WATER LINE DETAIL
SCALE : NOT TO SCALE

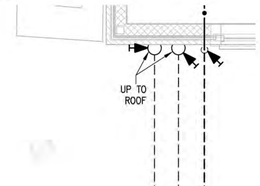

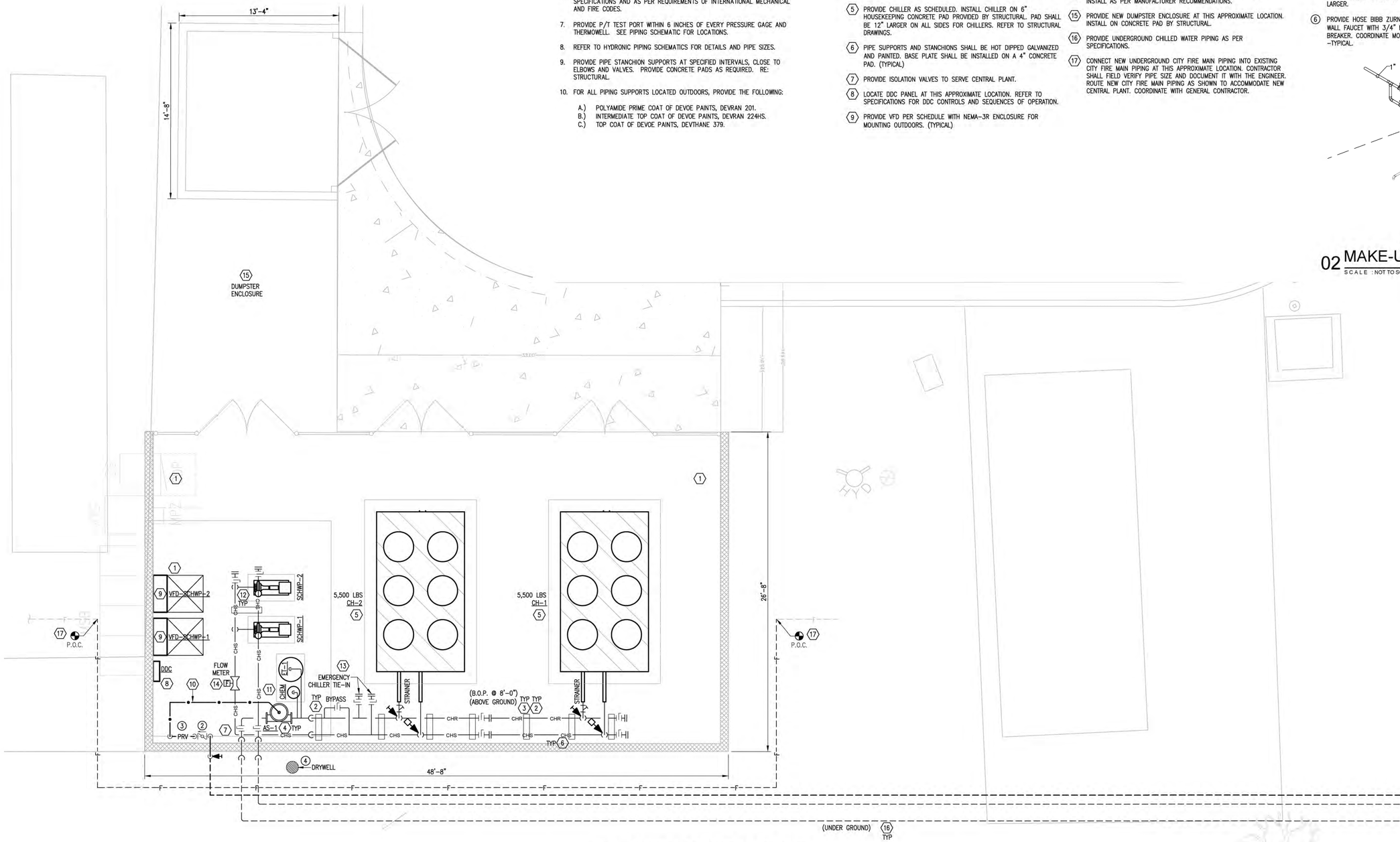

01 ENLARGED CENTRAL PLANT MECHANICAL RENOVATION PLAN
SCALE : 1/4" = 1'-0"

TRUE NORTH

NO: REVISION: BY:

COPY NO:

CESAR A. GONZALEZ
108611
LICENSED
PROFESSIONAL ENGINEER
03.23.2026

HVAC UPGRADES AT BROWNSVILLE ANIMAL REGULATION AND CARE FACILITY

OLMITO, TEXAS

F.M. 511

ethos engineering
1126 SOUTH COMMERCE ST.
HARLINGEN, TX
PHONE: 956-230-3435
TEXAS REGISTERED
ENGINEERING FIRM
F-15098

DATE:	MARCH 23. 2026
CHECKED BY:	C.A.G.
DRAWN BY:	P.M.
PROJECT NO.:	24v67
CAD FILE:	-
SHEET:	M3.3

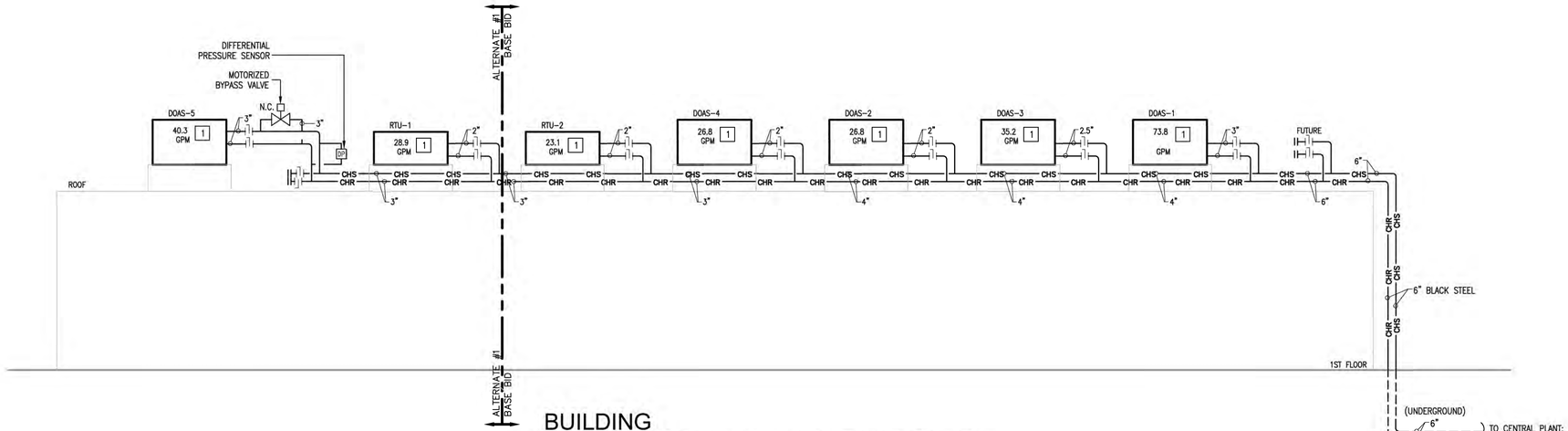

01 BUILDING CHILLED WATER SCHEMATIC DIAGRAM

SCALE : NOT TO SCALE

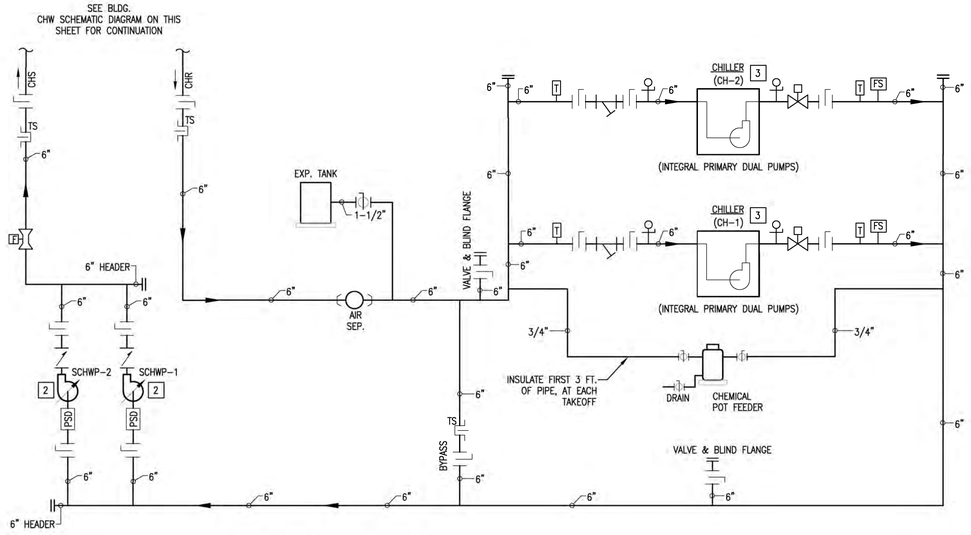

CENTRAL PLANT CHILLED WATER SCHEMATIC DIAGRAM

SCALE : NOT TO SCALE

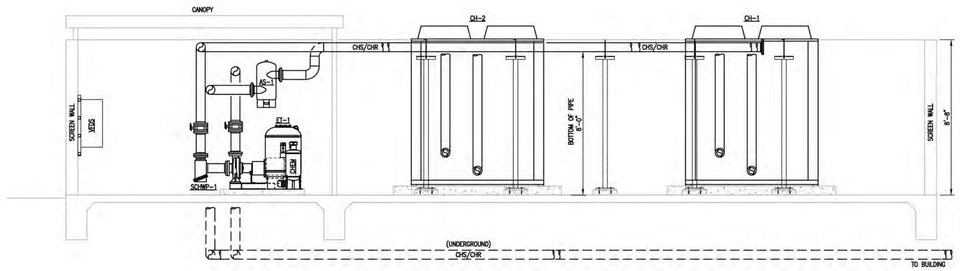

CENTRAL PLANT MECHANICAL ELEVATION

SCALE : 1/4" = 1'-0"

GENERAL NOTES:

1. ALL PIPING WELDS MUST BE WIRE-BRUSHED AND PAINTED A MINIMUM OF 12" ON EITHER SIDE OF WELD PRIOR TO INSULATION.
2. CLEAN AND PREPARE SURFACE OF CHILLED WATER PIPING BEFORE INSULATING. APPLY CORROSION COATING TO ALL PIPING. REFER TO SPECIFICATIONS FOR MORE INFORMATION.
3. INSULATE PER SPECIFICATIONS ALL PIPING, VALVES, FITTINGS, PUMP BODIES AND COLD SURFACES THAT ARE CAPABLE OF GENERATING CONDENSATION. FIBERGLASS INSULATION WILL NOT BE ALLOWED.
4. PRIOR TO INSTALLATION OF EQUIPMENT, VERIFY THAT MANUFACTURER RECOMMENDED AND CODE REQUIRED CLEARANCES ARE AVAILABLE.
5. INSTALL PIPES AND DUCTS AS HIGH AS POSSIBLE TO ALLOW MAXIMUM POSSIBLE HEADROOM. MIN. 9' AFF.
6. PROVIDE P/T TEST PORT WITHIN 6 INCHES OF EVERY PRESSURE GAGE AND THERMOWELL. SEE PIPING SCHEMATIC FOR LOCATIONS.
7. REFER TO HYDRONIC PIPING SCHEMATICS FOR DETAILS.
8. FOR ALL PIPING SUPPORTS LOCATED OUTDOORS, PROVIDE THE FOLLOWING:
   - A) POLYAMIDE PRIME COAT OF DEVOE PAINTS, DEVRAN 201.
   - B) INTERMEDIATE TOP COAT OF DEVOE PAINTS, DEVRAN 224HS.
   - C) TOP COAT OF DEVOE PAINTS, DEVTHANE 379.
9. GPM's ARE SHOWN FOR VERIFICATION PURPOSE ONLY. DO NOT USE THIS DATA FOR TAB. IN CASE OF CONFLICT, OR IF FLOW DATA DO NOT MATCH WITH THOSE FOR SCHEDULED EQUIPMENT, USE LARGER OF THE TWO.
10. REFER TO SPECIFICATIONS FOR CONTROL COMPONENTS, DEVICES, AND SENSORS TO BE COORDINATED WITH MECHANICAL WORK.
11. AT LOWEST POINT IN PIPING ENTERING CHILLER BARRELS, PROVIDE 6" LONG DRAIN NIPPLES AND BALL VALVES FOR DRAINING CHILLER.
12. MINIMUM PIPE SIZE SHALL BE 1".

KEYED NOTES:

1. PROVIDE 2-WAY CONTROL VALVE AT AHU. REFER TO CHILLED WATER COIL CONNECTION SCHEMATIC WITH 2-WAY VALVE ON DETAIL SHEET.
2. REFER TO PUMP DETAIL ON DETAIL SHEET.
3. REFER TO CHILLER PIPING CONNECTION DETAIL ON DETAIL SHEET.

LEGEND:

- AS — AIR SEPARATOR
- AUTOMATIC VALVE
- MANUAL VALVE
- STRAINER
- FLOW METER
- PSD — PUMP SUCTION DIFFUSER
- BALL VALVE
- WATER METER
- BLIND FLANGE
- PUMP
- PUMP WITH VFD
- PRESSURE GAUGE
- NEW EQUIPMENT
- NEW PIPING
- TS — THERMOWELL FOR DDC TEMPERATURE SENSOR
- FS — FLOW SWITCH
- CHECK VALVE
- T — THERMOMETER

NO:	REVISION:	BY:

COPY NO:

CESAR A. GONZALEZ
108611
LICENSED
PROFESSIONAL ENGINEER
03.23.2026

HVAC UPGRADES AT BROWNSVILLE ANIMAL REGULATION AND CARE FACILITY

OLMITO, TEXAS

F.M. 511

ethos engineering
1126 SOUTH COMMERCE ST.
HARLINGEN, TX
PHONE: 956-230-3435
TEXAS REGISTERED ENGINEERING FIRM
F-15998

DATE:	MARCH 23, 2026
CHECKED BY:	C.A.G.
DRAWN BY:	P.M.
PROJECT NO.:	24v67
CAD FILE:	-
SHEET:	M3.4

EXHAUST FAN SCHEDULE

MARK	ROOM NUMBER SERVING	TYPE	ELECTR. V/H/P	CFM	INPUT WATTS	MOTOR HP	E.S.P. IN. H20	SOUND IN SONES	MANUFACTURER & MODEL	WEIGHT (LBS)	CONTROL NOTES	NOTES
EF-1	STRAY DOGS 132	ROOF MOUNTED	115/60/1	3250 / 2145	-	1	0.4	22.0	LOREN COOK 150C17D	128	A, C	ALL
EF-2	STRAY DOGS 133	ROOF MOUNTED	115/60/1	3250 / 2145	-	1	0.4	22.0	LOREN COOK 150C17D	128	A, C	ALL
EF-3	QUARANTINE 134	ROOF MOUNTED	115/60/1	2200/1452	-	5/8	0.4	17.1	LOREN COOK 135C17D	110	A, C	ALL
EF-4	WOMEN 112	ROOF MOUNTED	115/60/1	150	-	1/6	0.4	4.2	LOREN COOK 90C17DEC	82	A, B	ALL
EF-5	MEN 111	ROOF MOUNTED	115/60/1	150	-	1/6	0.4	4.2	LOREN COOK 90C17DEC	82	A, B	ALL
EF-6	MEN 135 & WOMEN 136	ROOF MOUNTED	115/60/1	150	-	1/6	0.4	4.2	LOREN COOK 90C17DEC	82	A, B	ALL
EF-7	EUTH. 117 STRAY CATS 123	ROOF MOUNTED	115/60/1	1800 / 1188	-	1/2	0.4	13.3	LOREN COOK 135C17D	104	A, C	ALL
EF-8	DOG ADOPTION 131	ROOF MOUNTED	115/60/1	2500 / 1650	-	3/4	0.4	15.8	LOREN COOK 150C17D	130	A, C	ALL
EF-9	BLDG. ADDITION KENNELS, SURGERY	ROOF MOUNTED	115/60/1	2625 / 1733	-	3/4	0.4	16.7	LOREN COOK 150C17D	130	A, C	ALL

NOTES:
1. PROVIDE FACTORY MOUNTED DISCONNECT.
2. MANUFACTURER AND MODEL NUMBER LISTED ARE "OR APPROVED EQUAL." REFER TO SPECIFICATIONS.
3. PROVIDE FIELD-INSTALLED FAN SPEED CONTROLLER. COORDINATE INSTALLATION WITH ELECTRICAL CONTRACTOR.
4. PROVIDE FAN WITH ALL ALUMINUM BACKDRAFT DAMPER.
5. PROVIDE PREMIUM EFFICIENCY MOTOR WITH FACTORY WIRED DISCONNECT SWITCH, NEMA 1.
6. PROVIDE SOUND ATTENUATING ALUMINUM ROOF CURB, HINGED SUB-BASE ("KIT" NOT ACCEPTABLE), TIE DOWNS AND LORENIZED COATING.
7. PROVIDE IBC COMPLIANT CURB AND ATTACHMENTS FROM UNIT TO CURB AND CURB TO STRUCTURE. EQUIPMENT OR CURB MANUFACTURER IS RESPONSIBLE FOR PROVIDING ENGINEERED DETAIL ANALYSIS OF:
   1) ATTACHMENT OF EQUIPMENT TO CURB.
   2) CURB TO STRUCTURE.
   3) CURB AND ATTACHMENT HARDWARE STRENGTH.
   ROOF SUBSTRATE IS STRUCTURAL STEEL.
   EQUIPMENT OR CURB MANUFACTURER IS ALSO RESPONSIBLE FOR PROVIDING ENGINEERED INSTALLATION DRAWINGS FOR ITEMS 1 AND 2 LISTED ABOVE.
   BOTH, THE ENGINEERED ANALYSIS AND THE ENGINEERED INSTALLATION DRAWINGS SHALL BE PERFORMED SPECIFICALLY FOR THIS BUILDING AND PROJECT SITE AND STAMPED AND SEALED BY A TEXAS LICENSED ENGINEER.
   SUBMITTALS WILL NOT BE APPROVED UNTIL ALL DOCUMENTATION LISTED ABOVE IS PROVIDED ACCURATELY.

CONTROL NOTES:
A. PROVIDE DDC START/STOP AND STATUS POINTS. REFER TO SEQUENCES OF OPERATIONS.
B. FAN SHALL BE OPERATED BY A WALL SWITCH VIA THE OCCUPANCY SENSOR PROVIDED BY DIV 26 COORDINATE WITH ELECTRICAL
C. PROVIDE DDC START/STOP POINTS FOR LOW SPEED/HIGH SPEED. REFER TO SEQUENCE OF OPERATIONS.

PUMP SCHEDULE

MARK	LOCATION	TYPE	MANUFACTURER & MODEL NUMBER	GPM	HEAD (FT)	MIN. HP	MIN. EFF.	RPM	ELECTRICAL	NOTES
SCHWP-1	PUMP ROOM	END SUCTION	BELL & GOSSET E-1510 2BD	154	80	7.5	72.5%	1,780	480V / 3PH / 60HZ	ALL
SCHWP-2	PUMP ROOM	END SUCTION	BELL & GOSSET E-1510 2BD	154	80	7.5	72.5%	1,780	480V / 3PH / 60HZ	ALL

NOTES:
1. PROVIDE NON-OVERLOADING, PREMIUM EFFICIENCY, TEFC MOTORS, RATED FOR VFD DUTY.
2. PROVIDE COUPLINGS RATED FOR VFD DUTY. REXNORD OMEGA TYPE.
3. FACTORY REPRESENTATIVE SHALL FIELD-VERIFY PUMP ALIGNMENT WITH LASER ALIGNMENT TOOLS.
4. PROVIDE SUCTION DIFFUSERS AND INDUCTIVE ABSORBERS.
5. PROVIDE ONE SET OF SPARE SEALS FOR EACH PUMP. COORDINATE DELIVERY WITH OWNER.
6. PROVIDE EXTERIOR EPOXY COATING, AND HOT DIPPED GALVANIZED DRAIN PAN.

VFD SCHEDULE

MARK	EQUIPMENT SERVED	VFD QTY	MOTOR HP	FL AMPS	ELECTRICAL V/P/Hz	MANUFACTURER & MODEL NUMBER	NOTES
PUMPS							
VFD-SCHWP-1	SCHWP-1	1	7.5	11	480/3/60	DANFOSS VLT-HVAC	ALL
VFD-SCHWP-2	SCHWP-2	1	7.5	11	480/3/60	DANFOSS VLT-HVAC	ALL

NOTES:
1. PROVIDE NEMA 3R ENCLOSURE FOR VFD LOCATED INDOORS.
2. PROVIDE INTEGRAL DISCONNECT.
3. PROVIDE BYPASS WITH VFDS.

AIR COOLED CHILLER SCHEDULE

MARK	CHILLER OPTIONS	QTY.	NOMINAL (TONS)	CAPACITY (TONS)	AMBIENT TEMP (F)	FLOW (GPM)	MAX PD (FT WG)	EWT (F)	LWT (F)	# OF COMPRESSORS TYPE	MIN % CAPACITY	ELECTRICAL V/PH/HZ	MCA	MOCP	IPLV AT ARI	FULL LOAD EER AT ARI	SOUND POWER OVERALL dBA	DIMENSIONS (LxWxH) IN.	OPERATING WEIGHT (LB)	NOTES	MANUFACTURER	MODEL NUMBER
CH-1	HIGH EFFICIENCY SCROLLS	1	80	77.2	100	153.9	10	56	44	4 SCROLL TYPE	20	460/3/60	207.0	250.0	17.38	11.29	89	160x88x99	5,500	ALL	DAIKIN	AGZ006F
CH-2	HIGH EFFICIENCY SCROLLS	1	80	77.2	100	153.9	10	56	44	4 SCROLL TYPE	20	460/3/60	207.0	250.0	17.38	11.29	89	160x88x99	5,500	ALL	DAIKIN	AGZ006F

NOTES:
1. CONTRACTOR IS RESPONSIBLE FOR CHANGES TO DESIGN RESULTING FROM SELECTION OF OTHER MANUFACTURERS EQUIPMENT.
2. LISTED CAPACITY BASED ON ACTUAL CONDITIONS LISTED ABOVE. EFFICIENCIES LISTED AT ARI CONDITIONS.
3. PROVIDE CHILLER WITH FACTORY INSTALLED HAIL GUARDS, SOUND ENCLOSURES AS NECESSARY TO MEET SCHEDULED SOUND POWER, CONDENSER COIL COATING (E-COAT)
4. PROVIDE UNIT WITH LOW AMBIENT CONTROL TO 40°F, ACROSS THE LINE STARTER, AND SUCTION SERVICE VALVES.
5. CONDENSER COILS SHALL HAVE 9153 ALUMINUM ALLOY MICROCHANNEL COIL OR CU/AL COIL. PROVIDE FACTORY E-COATING, FIELD APPLIED COATINGS ARE NOT ALLOWED.
6. PROVIDE CHILLER WITH SINGLE POINT POWER CIRCUIT BREAKER CONNECTION, INCLUDING POWER FOR CONTROLS. CHILLER SHALL HAVE A 65,000 AMP SCWR RATING.
7. PROVIDE TERMINAL BLOCK FOR POWER CONNECTION. DIV. 26 WILL PROVIDE EXTERNALLY MOUNTED NON-FUSED DISCONNECT.
8. PROVIDE FACTORY INSTALLED CHECK VALVE, ISOLATION VALVE, AND PUMP VFD FOR BALANCING PURPOSES.
9. PROVIDE DEMAND LIMITING VIA 4-20MA INPUT FEATURE TO LIMIT MACHINE CAPACITY.
10. PROVIDE INTEGRAL PRIMARY DUAL PUMP PACKAGE WITH 40' TDH.
11. PROVIDE FACTORY INSTALLED HOT GAS BYPASS AS NEEDED, TO ALLOW CHILLER TO UNLOAD TO THE SCHEDULED MINIMUM CAPACITY.
12. PROVIDE RUBBER ISOLATOR KIT, SHIPPED LOOSE FOR FIELD INSTALLATION BY CONTRACTOR.
13. PROVIDE SHRINK WRAP BAGGING PRIOR TO TRANSPORTATION.
14. PROVIDE FACTORY INSTALLED THERMAL DISPERSION FLOW SWITCH.
15. PROVIDE STRAINER THAT SHIPS LOOSE FOR CONTRACTOR TO INSTALL PER MANUFACTURER IOM.
16. APPROVED EQUAL MANUFACTURERS BIDDING THEIR HIGHEST EFFICIENCY ALTERNATIVE AND STILL NOT MEETING THE SCHEDULED IEER VALUES AT ARI CONDITIONS SHALL INCLUDE A PERFORMANCE PENALTY IN THEIR BID IN THE AMOUNT OF $15/TON/IEER FOR EVERY 1/10 OF A POINT LOWER THAN SCHEDULED IEER. IF THE ALTERNATIVE MANUFACTURER IS SELECTED, MANUFACTURER SHALL ISSUE A CHECK TO THE OWNER FOR THE PENALTY AMOUNT.

128.38 46.34267 82.03325 26.0 20.313

HYDRONIC - ROOF TOP UNIT SCHEDULE

MARK	UNIT TYPE	TOTAL CFM	OUTSIDE AIR CFM	ESP IN WG	MIN MOTOR HP	ELECT. V/P/H	MCA/MOCP AMPS	HYDRONIC COOLING COIL SECTION							ELECTRIC HEATING				WEIGHT (LBS.)	NOTES	MANUFACTURER MODEL NUMBER
								TOTAL BTU/H	SENS. BTU/H	EAT DB/WB (F)	LAT DB/WB (F)	EWT/LWT (F)	CHW GPM	WPD (FT)	KW	STAGE	VOLTAGE	MCA/MOCP AMPS			
DOAS-1	HYDRONIC	4400	4400	1.00	2 x 2.3	460/3/60	6.3 / 15	447,036	150,279	83.0/80.1	52/52	44/56	73.8	13.0	65	SCR	460/3/60	-	2,400	ALL	DAIKIN OAH
DOAS-2	HYDRONIC	1600	1600	1.00	1 x 2.3	460/3/60	3.5 / 15	162,718	54,714	83.0/80.1	52/52	44/56	26.8	13.0	25	SCR	460/3/60	-	1,600	ALL	DAIKIN OAH
DOAS-3	HYDRONIC	2100	2100	1.00	1 x 2.3	460/3/60	3.5 / 15	211,927	71,119	83.0/80.1	52/52	44/56	35.2	13.0	30	SCR	460/3/60	-	1,500	ALL	DAIKIN OAH
DOAS-4	HYDRONIC	1600	1600	1.00	1 x 2.3	460/3/60	3.5 / 15	162,718	54,714	83.0/80.1	52/52	44/56	26.8	13.0	25	SCR	460/3/60	-	1,600	ALL	DAIKIN OAH
DOAS-5	HYDRONIC	2400	2400	1.00	1 x 2.3	460/3/60	3.5 / 15	243,756	81,936	83.0/80.1	52/52	44/56	40.3	13.0	35	SCR	460/3/60	-	1,800	ALL	DAIKIN OAH
RTU-1	HYDRONIC	3000	1000	1.00	1 x 3.27	460/3/60	4.9 / 15	173,151	86,868	78.4/70.1	52/52	44/56	28.9	13.0	30	SCR	460/3/60	-	1,800	ALL	DAIKIN OAH
RTU-2	HYDRONIC	2400	800	1.00	1 x 2.3	460/3/60	3.5 / 15	139,205	69,784	78.4/70.1	52/52	44/56	23.1	13.0	25	SCR	460/3/60	-	1,700	ALL	DAIKIN OAH

NOTES:
1. MANUFACTURER AND MODEL NUMBER LISTED ARE "OR APPROVED EQUAL". SEE SPECIFICATIONS FOR APPROVED MANUFACTURERS AND SUBSTITUTION PROCEDURES.
2. ESP IS STRICTLY EXTERNAL STATIC PRESSURE, AND DOES NOT INCLUDE FILTER, COIL, CABINET LOSSES.
3. DOUBLE WALL R-13 CABINET WITH THERMAL BREAK, PAINTED EXTERIOR WALL, ON NEW ROOF CURBS. REFER TO RTU PLANS AND ELEVATIONS FOR RTU CONFIGURATION.
4. PROVIDE STAINLESS STEEL DRAIN PAN AND STAINLESS STEEL COIL CASING AND STAINLESS STEEL INNER LINER FOR COIL SECTION. COILS NO MORE THAN 6 ROWS AND 12 FPI, OR 8 ROWS AND 10 FPI
5. PROVIDE 18" HINGED ACCESS DOOR IN THE OPPOSITE SIDE OF COIL CONNECTION HOUSING TO ACCESS THE CHW COIL
6. DIRECT DRIVE FANS. PROVIDE A DISCHARGE PLENUM OR DIRECT DRIVE PLENUM FAN WITH BOTTOM OPENING. RTU DISCHARGE VELOCITIES SHALL NOT EXCEED 1500 FPM.
7. NON-OVERLOADING TYPE, PREMIUM EFFICIENCY, TEFC, ECM MOTORS. WITH BAS COORDINATE CONTROL POINT CONNECTIONS. ENSURE THAT ALL DRIVERS, CONTROLLERS, AND ENGINES ARE SUPPLIED WITH THE UNIT.
8. FOR DOAS UNITS: SMOKE DETECTORS IN SUPPLY AIR STREAM, EPOXY COATED CHILLED WATER COILS, 2" MERV 8 FILTERS IN GALVANIZED FILTER FRAMES, OA DAMPERS, ACTUATORS BY BAS.
9. FOR RTUS: SMOKE DETECTORS IN RETURN AIR STREAM, TRADITIONAL FILTER MIXING BOX WITH GALVANIZED FLAT FILTER RACKS (2" MERV8 PRE/4" MERV13 POST FILTERS), OA AND RA DAMPERS. ACTUATORS BY BAS.
10. PROVIDE FACTORY MOUNTED CONVENIENCE OUTLET. FIELD WIRED AND FUSE PROTECTED BY ELECTRICAL CONTRACTOR.
11. SAFETY DISCCONNECT BY DIV. 26. COORDINATE WITH ELECTRICAL CONTRACTOR.
12. PROVIDE IBC COMPLIANT NEW 18" HIGH ROOF CURB AND ATTACHMENTS FROM UNIT TO CURB, AND CURB TO STRUCTURE. EQUIPMENT OR CURB MANUFACTURER IS RESPONSIBLE FOR PROVIDING ENGINEERED DETAIL ANALYSIS OF:
    1) ATTACHMENT OF EQUIPMENT TO CURB.
    2) CURB TO STRUCTURE.
    3) CURB AND ATTACHMENT HARDWARE STRENGTH.
    REFER TO ARCHITECTURAL AND STRUCTURAL DRAWINGS FOR ROOF SUBSTRATE DETAILS.
    EQUIPMENT OR CURB MANUFACTURER IS ALSO RESPONSIBLE FOR PROVIDING ENGINEERED INSTALLATION DRAWINGS FOR ITEMS 1 AND 2 LISTED ABOVE.
13. BOTH, THE ENGINEERED ANALYSIS AND THE ENGINEERED INSTALLATION DRAWINGS SHALL BE PERFORMED SPECIFICALLY FOR THIS BUILDING AND PROJECT SITE AND STAMPED AND SEALED BY A TEXAS LICENSED ENGINEER.
14. PROVIDE SEPARATE POINT OF POWER FOR ELECTRIC HEAT.
15. PROVIDE ROOF MOUNTED UNIT WITH SLOPED ROOF AND FACTORY PAINT HAVING A MINIMUM 3,000 HR ASTM B117 SALT SPRAY RATING.
16. PROVIDE FAN ARRAY WITH FACTORY MOUNTED SINGLE POINT POWER PANEL INCLUDING HAND/OFF/AUTO SWITCH, 0-10 VDC SIGNAL INPUT, FAN FAULT TERMINAL, FUSED DISCONNECT, MOTOR CONTROL PANEL, LINE AND LOW VOLTAGE WIRING, INDIVIDUAL FAN MOTOR OVERCURRENT PROTECTION/ISOLATION SWITCH, AND POTENTIOMETER FOR MANUAL CONTROL OVERRIDE.

AIR DEVICE & DIFFUSER SCHEDULE

SUPPLY AIR DIFFUSER (SD-1)

TITUS TMS-AA NC < 20			DESCRIPTION: ALUMINUM SQUARE CEILING DIFFUSER, BORDER TYPE 3, COLOR WHITE WITH ROUND NECK AND FULL FACE		
CLG. MODULE SIZE INCHES	FACE SIZE INCHES	ROUND NECK SIZE	FLEX DUCT SIZE	DIFFUSER DIFFUSION PATTERN & CFM	NOTES
24 X 24	24 X 24	TO MATCH NC CRITERIA	SEE PLAN	SD1-CFM	1-4,6

RETURN, AND EXHAUST AIR GRILLE (RG-1, EG-1)

TITUS 50F NC < 20			DESCRIPTION: ALUMINUM GRID EGGCRATE RETURN GRILLE WITH BORDER TYPE 3 (LAY-IN).	
CFM RANGE	CLG. MODULE SIZE INCHES	NOMINAL DUCT SIZE INCHES (INLET)	DIFFUSER DIFFUSION PATTERN & CFM	NOTES
0 - 1600	24 X 24	18 X 18	EG1-CFM (EXHAUST AIR GRILLES ONLY)	1,2,4,5,6
0 - 1600	24 X 24	18 X 18	RG1-CFM (RETURN AIR GRILLES ONLY)	1,4,6

NOTES:
1. PROVIDE MANUFACTURER'S STANDARD BAKED WHITE ENAMEL FINISH.
2. PROVIDE FULL SIZE BACK PAN WITH DUCT ADAPTER.
3. INSULATE BACK PAN ON ALL SUPPLY AIR DIFFUSERS AND GRILLES.
4. PROVIDE MOUNTING FRAME TYPE COMPATIBLE WITH SCHEDULED CEILING OR WALL (SURFACE OR LAY-IN).
5. PROVIDE BALANCING DAMPER ON ALL EXHAUST GRILLES.
6. AIR DEVICES SHALL MATCH ARCHITECTURAL FINISH. COORDINATE COLOR WITH ARCHITECT.

AIR SEPARATOR SCHEDULE

MARK	SERVICE	TYPE	ACCEPTANCE VOLUME GALLONS	(DIAMETER) X (HEIGHT)	LOCATION	MANUFACTURER & MODEL NUMBER OR EQUAL
AS-1	CHILLED WATER	FLANGED AIR SEPARATOR	34	18"x44"	MECHANICAL YARD	BELL AND GOSSETT ROLAIRTROL RL-6F

CHEMICAL FILTER FEEDER TANK SCHEDULE

MARK	SERVICE	TYPE	ACCEPTANCE VOLUME GALLONS	(DIAMETER) X (HEIGHT)	LOCATION	MANUFACTURER & MODEL NUMBER OR EQUAL
CHEM	CHILLED WATER	FILTER FEEDER	7.5	10"x31.75"	MECHANICAL ROOM	NEPTUNE FTF

EXPANSION TANK SCHEDULE

MARK	SERVICE	TYPE	ACCEPTANCE VOLUME GALLONS	(DIAMETER) X (HEIGHT)	LOCATION	MANUFACTURER & MODEL NUMBER OR EQUAL
ET-1	CHILLED WATER	VERTICAL FLOOR MOUNT BLADDER	53	24"x37"	MECHANICAL YARD	BELL AND GOSSETT B-200

NO: REVISION: BY:

COPY NO:

HVAC UPGRADES AT BROWNSVILLE ANIMAL REGULATION AND CARE FACILITY

OLMITO, TEXAS

F.M. 511

ethos engineering
1126 SOUTH COMMERCE ST.
HARLINGEN, TX.
PHONE: 956-230-3435
TEXAS REGISTERED ENGINEERING FIRM F-15998

DATE: MARCH 23. 2026
CHECKED BY: C.A.G.
DRAWN BY: P.M.
PROJECT NO.: 24v67
CAD FILE: -
SHEET: M4.1

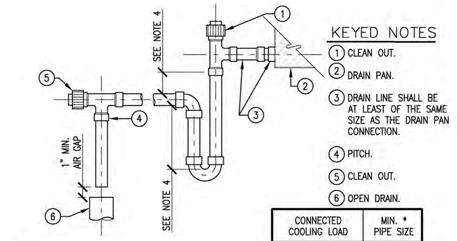

NOTES:

1. MANUALLY PRIME TRAP BEFORE START UP.
2. SUPPORT DRAIN LINES TO PREVENT SAG.
3. ALLOW SUFFICIENT SPACE BELOW PAN FOR TRAP AND PITCH TO DRAIN.
4. COORDINATE WITH MANUFACTURER OF AHU.

CONNECTED COOLING LOAD	MIN. * PIPE SIZE
UP TO 2 TON	3/4"
2-5	1"
5-30	1-1/4"
30-50	1-1/2"
50-160	2"
160-300	3"
300-430	4"

* NOT SMALLER THAN OUTLET SIZE.

01 CONDENSATE DRAIN TRAP PIPE

SCALE : NOT TO SCALE

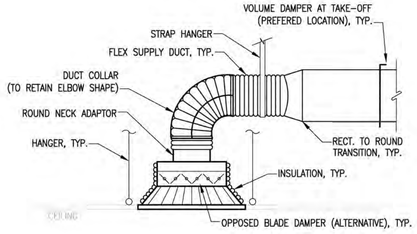

02 CEILING DIFFUSER SUPPORT

SCALE : NOT TO SCALE

NOTES:

1. FIT ALL CONNECTIONS TO AVOID VISIBLE OPENINGS & SECURE SUITABLY FOR THE PRESSURE CLASS.
2. ADDITIONAL MECHANICAL FASTENERS REQ'D. FOR 4" W.G. & OVER.
3. DO NOT EXPOSE LINER EDGES ON LINED DUCT CONNECTIONS.
4. ALL OPENINGS TO BE CUT ACCURATELY IN SHAPE & SIZE.

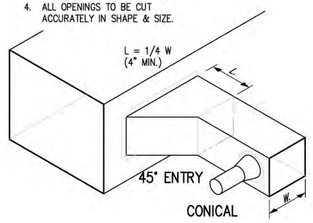

03 BRANCH CONNECTION DETAILS

SCALE : NOT TO SCALE

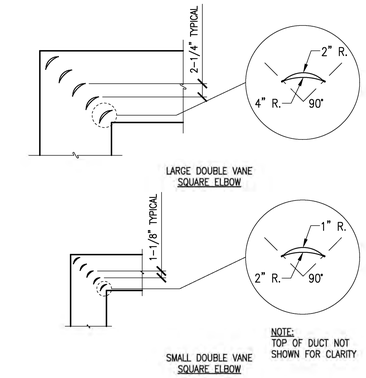

04 TYPICAL VANED DUCT ELBOWS

SCALE : NOT TO SCALE

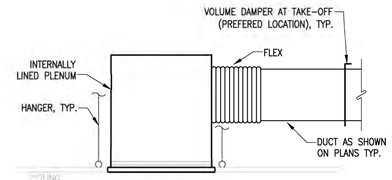

05 CEILING RETURN GRILLE DETAIL

SCALE : NOT TO SCALE

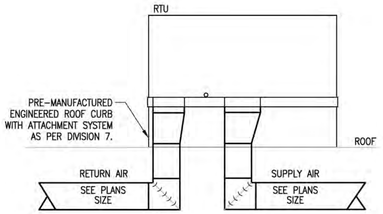

06 ROOFTOP UNIT DETAIL

SCALE : NOT TO SCALE

NOTES:

1. BUILDING STRUCTURAL STEEL.
2. UNISTRUT SUPPORTS.
3. MOUNTING PLATE BY CONTRACTOR. ATTACH TO UNISTRUT SUPPORTS. MATCH SPEED CONTROLLER BOX SCREW HOLE PATTERN FOR FIELD MOUNTING.
4. SPEED CONTROLLER AS SCHEDULED. ATTACH TO MOUNTING PLATE AND UNISTRUT SUPPORTS ABOVE ACCESSIBLE CEILING. MOUNT DIRECTLY BELOW ASSOCIATED EXHAUST FAN ON ROOF.
5. ASSOCIATED EXHAUST FAN ON ROOF.
6. CONTROL WIRING AS PER MANUFACTURER'S RECOMMENDATIONS. INTERLOCK SPEED CONTROLLER WITH ASSOCIATED EXHAUST FAN ON ROOF.
7. CONTROL WIRING AS PER MANUFACTURER'S RECOMMENDATIONS. INTERLOCK SPEED CONTROLLER WITH (BAS) BUILDING AUTOMATION SYSTEM.

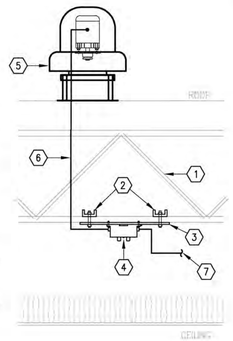

EXHAUST FAN SPEED CONTROLLER DETAIL 07

SCALE : NOT TO SCALE

External Speed Control Electronically Commutated (EC) Motor Type N

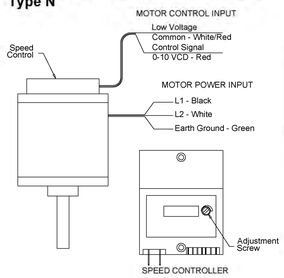

External Speed Control Electronically Commutated (EC) Motor Type M

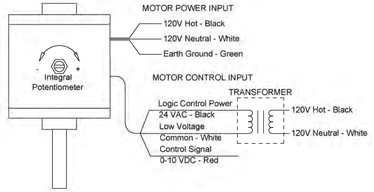

NOTE:
1. TYPE N: EF-1, EF-2, EF-3, EF-7, EF-8
2. TYPE M: EF-4, EF-5, EF-6

DETAILS COURTESY OF LOREN COOK COMPANY

EXHAUST FAN SPEED CONTROLLER DETAIL 08

SCALE : NOT TO SCALE

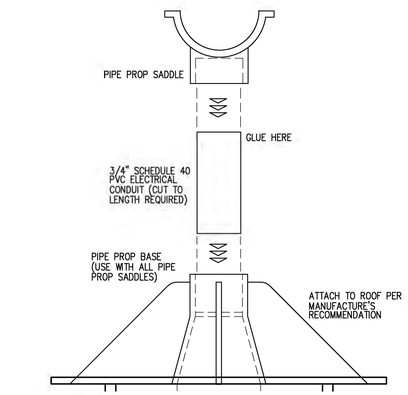

CONDENSATE PIPE SUPPORT DETAIL 09

SCALE : NOT TO SCALE

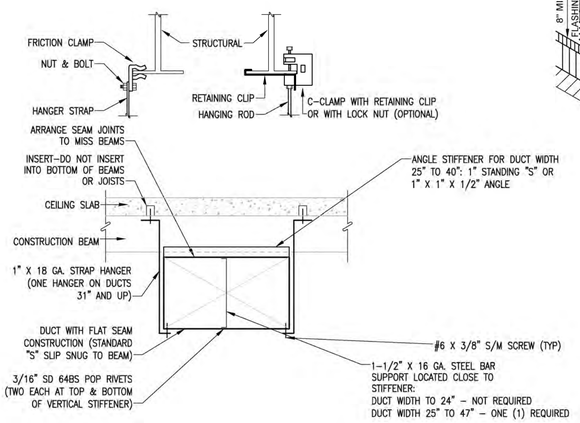

NOTE:
FOLLOW SMACNA GUIDELINES FOR DUCT SUPPORT.

10 DUCT SUPPORT

SCALE : NOT TO SCALE

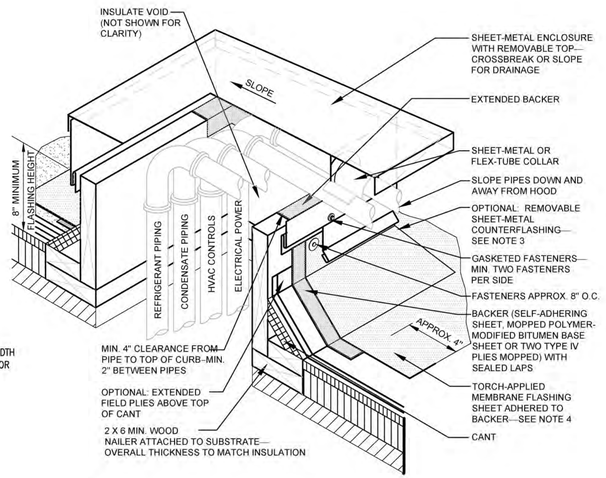

NOTES:

1. THIS DETAIL ILLUSTRATES ANOTHER METHOD OF ELIMINATING PITCH POCKETS AND AN OPTIONAL METHOD OF GROUPING PIPING THAT MUST PENETRATE THE ROOF.
2. MANY MANUFACTURERS OFFER PREFABRICATED BOOTS AND OTHER MATERIALS FOR THIS PURPOSE. SPECIFICS ABOUT THESE PROPRIETARY DESIGNS VARY GREATLY, AND INDIVIDUAL MANUFACTURERS' SPECIFICATIONS SHOULD BE CONSULTED FOR THEIR USE.
3. WHERE THE SHEET-METAL ENCLOSURE OVERLAPS THE BASE FLASHING AT LEAST 3 INCHES, THE REMOVABLE SHEET-METAL COUNTERFLASHING IS NOT REQUIRED.
4. WHEN POTENTIAL FIRE HAZARDS CAN BE MITIGATED, NRCA CONSIDERS IT ACCEPTABLE TO INSTALL TORCH-APPLIED POLYMER-MODIFIED BITUMEN SHEET OVER THE SPECIFIED BACKER FLASHING USING THE DIRECT TORCHING METHOD PROVIDED LOW OUTPUT (50,000 BTU OUTPUT OR LESS) TORCHING EQUIPMENT IS USED. WHEN POTENTIAL FIRE HAZARDS CANNOT BE ADEQUATELY MITIGATED, TORCH-APPLIED POLYMER-MODIFIED BITUMEN SHEET SHALL BE INSTALLED USING INDIRECT TORCHING METHODS, SUCH AS THE TORCH-AND- FLOP APPLICATION METHOD.
5. FOR ROOF SYSTEMS WITH FACTORY-APPLIED GRANULE SURFACING, PROPERLY PREPARE CAP SHEET TO RECEIVE FLASHING.
6. REFER TO THE INTRODUCTION OF THE CONSTRUCTION DETAILS CHAPTER FOR ADDITIONAL INFORMATION.

11 HVAC PIPING ROOF PENETRATION DETAIL

SCALE : NOT TO SCALE

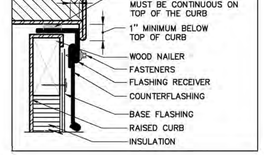

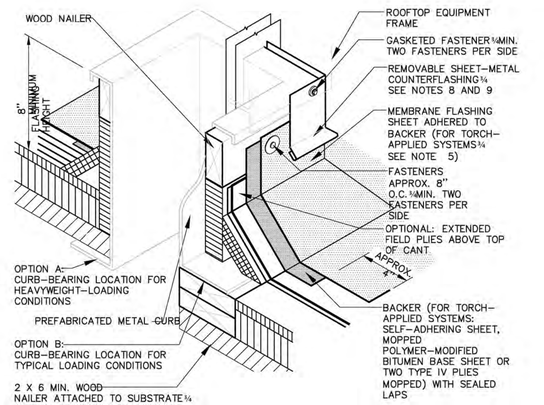

NOTES:

1. THIS DETAIL IS APPLICABLE FOR HOT-, COLD- OR TORCHED-APPLIED FLASHING SYSTEMS.
2. THE CURBS, TOP WOOD NAILER AND SEAL STRIP ARE TO BE SUPPLIED BY THE CURB MANUFACTURER.
3. WHEN POSSIBLE, THE MECHANICAL UNITS SHOULD NOT BE SET UNTIL THE ROOF MEMBRANE AND FLASHING HAVE BEEN INSTALLED.
4. WHERE THE SKYLIGHT, SCUTTLE OR SMOKE VENT FRAME OVERLAPS THE BASE FLASHING AT LEAST 3 INCHES, THE REMOVABLE SHEET-METAL COUNTERFLASHING IS NOT REQUIRED.
5. WHEN POTENTIAL FIRE HAZARDS CAN BE MITIGATED, NRCA CONSIDERS IT ACCEPTABLE TO INSTALL TORCH-APPLIED POLYMER-MODIFIED BITUMEN SHEET OVER THE SPECIFIED BACKER FLASHING USING THE DIRECT TORCHING METHOD PROVIDED LOW OUTPUT (50,000 BTU OUTPUT OR LESS) TORCHING EQUIPMENT IS USED. WHEN POTENTIAL FIRE HAZARDS CANNOT BE ADEQUATELY MITIGATED, TORCH-APPLIED POLYMER-MODIFIED BITUMEN SHEET SHALL BE INSTALLED USING INDIRECT TORCHING METHODS, SUCH AS THE TORCH-AND-FLOP APPLICATION METHOD.
6. NRCA RECOMMENDS DESIGNERS CONSIDER PERMANENT INTERNAL OR EXTERNAL FALL-PROTECTION DEVICES AT ALL SKYLIGHTS.
7. FOR ROOF SYSTEMS WITH FACTORY-APPLIED GRANULE SURFACING, PROPERLY PREPARE CAP SHEET TO RECEIVE FLASHING.
8. REFER TO THE ARCHITECTURAL METAL FLASHING SECTION OF THE NRCA ROOFING MANUAL: ARCHITECTURAL METAL FLASHING, CONDENSATION AND AIR LEAKAGE CONTROL, AND REROOFING FOR JOINERY AND SECUREMENT OPTIONS FOR SHEET-METAL FLASHINGS.
9. REFER TO THE INTRODUCTION OF THE CONSTRUCTION DETAILS CHAPTER FOR ADDITIONAL INFORMATION.

12 ROOF CURB FLASHING DETAIL

SCALE : NOT TO SCALE

NO:	REVISION:	BY:

COPY NO:

HVAC UPGRADES AT BROWNSVILLE ANIMAL REGULATION AND CARE FACILITY

OLMITO, TEXAS

F.M. 511

ethos engineering
1126 SOUTH COMMERCE ST.
HARLINGEN, TX
PHONE: 956-230-3455
TEXAS REGISTERED ENGINEERING FIRM F-15998

DATE:	MARCH 23. 2026
CHECKED BY:	C.A.G.
DRAWN BY:	P.M.
PROJECT NO.:	24v67
CAD FILE:	-
SHEET:	M5.1

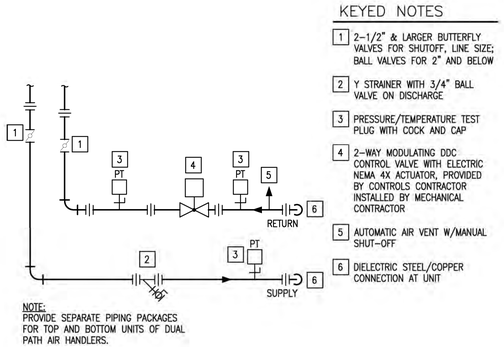

01 CHILLED WATER COIL CONNECTION SCHEMATIC

SCALE : NOT TO SCALE

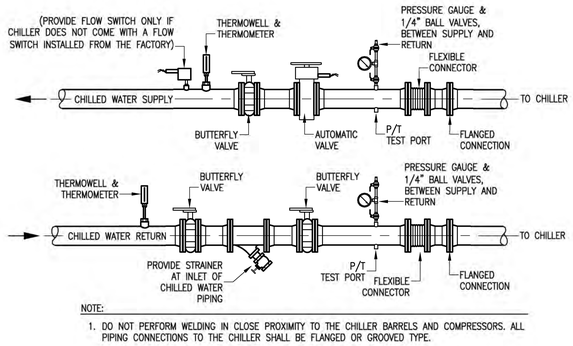

02 CHILLER PIPING CONNECTION DETAIL

SCALE : NOT TO SCALE

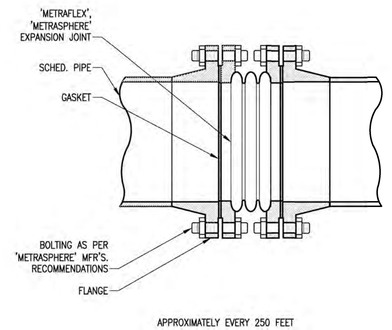

03 TYPICAL EXPANSION JOINT

SCALE : NOT TO SCALE

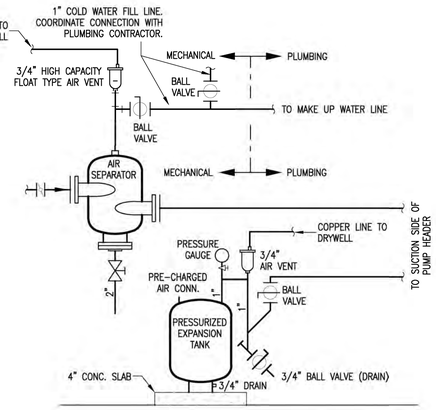

04 AIR SEPARATOR & EXPANSION TANK DETAIL

SCALE : NOT TO SCALE

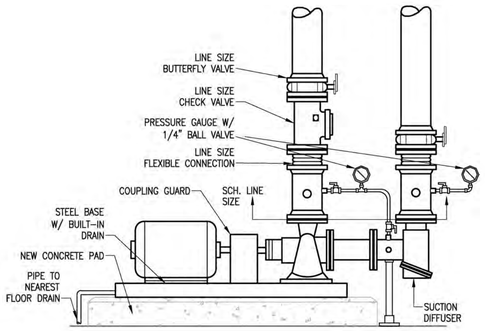

NOTES:

1. PIPE SIZE INDICATED ON DRAWING SHALL BE FULL SIZE TO POINT OF CONNECTION TO PUMP FLANGES. PIPING COMPONENTS SUCH AS VALVES, STRAINERS, FLEXIBLE CONNECTORS SHALL BE SAME SIZE AS PIPING SERVING PUMPS.
2. INSULATE CHILLED WATER PUMPS AS PER SPECIFICATIONS.

05 END SUCTION PUMP DETAIL

SCALE : NOT TO SCALE

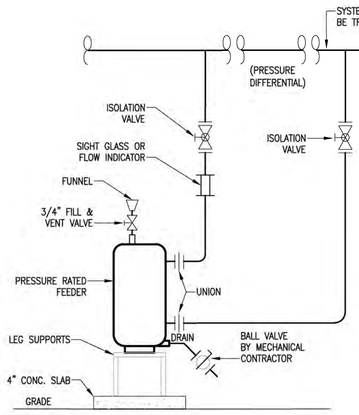

06 CHEMICAL TREATMENT POT FEEDER

SCALE : NOT TO SCALE

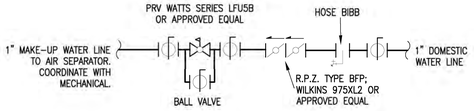

07 MAKE-UP WATER DETAIL

SCALE : NOT TO SCALE

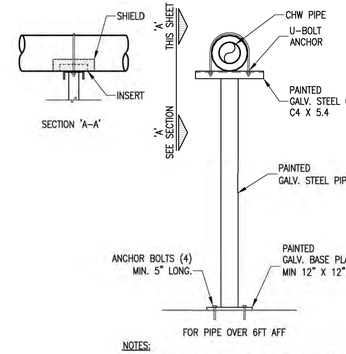

NOTES:

1. ALL EXTERIOR SUPPORT STRUCTURE SHALL HAVE 4" CONCRETE PAD UNDER BASE PLATE.
2. ALL STEEL EXPOSED TO EXTERIOR SHALL BE HOT DIPPED GALVANIZED & PAINTED WITH EPOXY PAINT.

08 PIPE SUPPORT STRUCTURE

SCALE : NOT TO SCALE

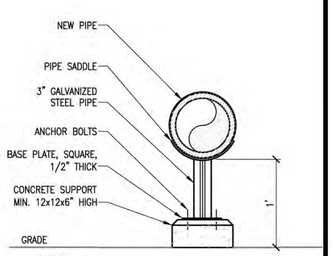

NOTE:

1. ALL STEEL EXPOSED TO EXTERIOR SHALL BE HOT DIPPED GALVANIZED & PAINTED WITH EPOXY PAINT.

09 CONCRETE PIPE SUPPORT DETAIL

SCALE : NOT TO SCALE

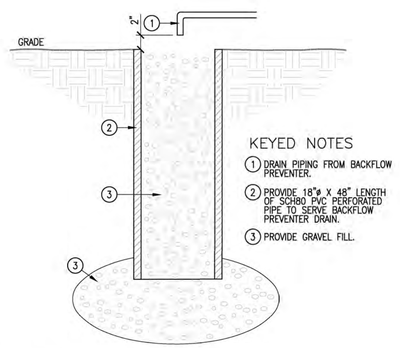

10 DRYWELL DETAIL

SCALE : NOT TO SCALE

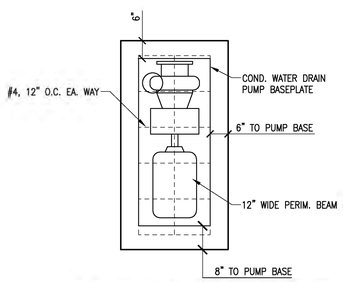

NOTE: PROVIDE SPRING TYPE VIBRATION ISOLATION INERTIA BASE.

11 PUMP HOUSEKEEPING PAD

SCALE : NOT TO SCALE

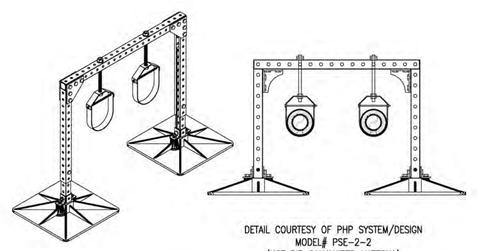

DETAIL COURTESY OF PHP SYSTEM/DESIGN MODEL# PSE-2-2 (HOT DIP GALVANIZED MATERIAL)
CONTACT TEXAS AIR PRODUCTS FOR DESIGN/PRICING OF PHP PIPE SUPPORTS

12 2- PIPE CHW / HW PIPING ROOF SUPPORT DETAIL

SCALE : NOT TO SCALE

NO: REVISION: BY:

COPY NO:

CESAR A. GONZALEZ
108611
LICENSED PROFESSIONAL ENGINEER
03.23.2026

HVAC UPGRADES AT BROWNSVILLE ANIMAL REGULATION AND CARE FACILITY

OLMITO, TEXAS

F.M. 511

ethos engineering
1126 SOUTH COMMERCE ST.
HARLINGEN, TX.
PHONE: 956-230-3435
TEXAS REGISTERED ENGINEERING FIRM
F-15698

DATE: MARCH 23. 2026
CHECKED BY: C.A.G.
DRAWN BY: P.M.
PROJECT NO.: 24v67
CAD FILE: -
SHEET: M5.2

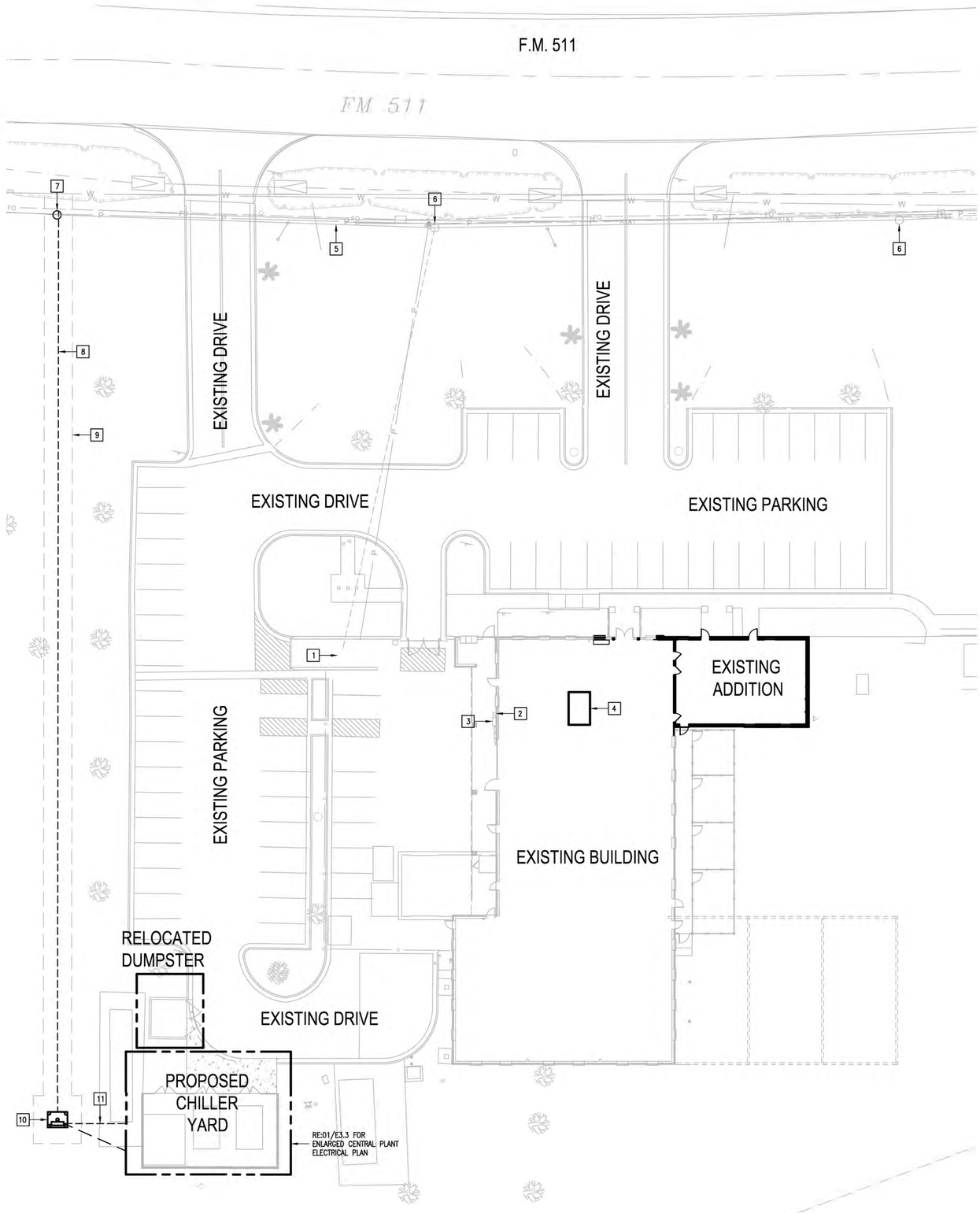

01 ELECTRICAL SITE PLAN
SCALE :1" = 20'-0"

TRUE NORTH

CLEAR TRENCH OF ALL ROCKS AND DEBRIS BEFORE ADDING SAND CUSHION.

COMPACT TRENCH FILL TO 95% PROCTOR DENSITY.

MAINTAIN A MINIMUM OF 60 INCHES UNDISTURBED EARTH BETWEEN PARALLEL WATER AND SEWER LINES OR SUPPORT WATER LINE ON SEPARATE SHELF A MINIMUM OF 12" ABOVE SEWER LINE.

MAINTAIN A MINIMUM OF 24" HORIZONTALLY BETWEEN ELECTRICAL AND SEWER. MAINTAIN A MINIMUM OF 12" VERTICALLY OR 24" HORIZONTALLY BETWEEN ELECTRICAL AND WATER LINES, GAS LINES, TELEPHONE RACEWAYS AND CABLE RACEWAYS.

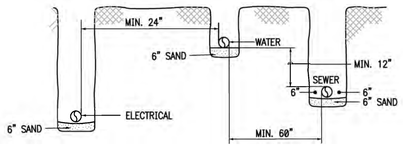

03 TRENCHING DETAIL
SCALE :NONE

COMPACT TRENCH FILL TO 95% PROCTOR DENSITY.

CROWN TOP FOR FUTURE SETTLING. REPAIR CONCRETE, ASPHALT, GRASS AREAS TO PRE-CONSTRUCTION CONDITIONS.

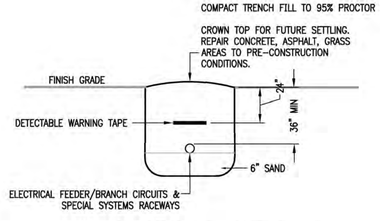

02 BURIAL DETAIL FOR ELECTRICAL RACEWAYS
SCALE :NONE

ELECTRICAL:

1. ALL ELECTRICAL WORK SHALL BE UNDER THE MASTER ELECTRICIAN WHO PULLED THE PERMIT AND ITS JOURNEYMAN ELECTRICIANS.
2. PERFORM ALL WORK PER ADOPTED N.E.C. AND APPLICABLE STATE STANDARDS, UNLESS DRAWINGS OR SPECIFICATIONS HAVE MORE STRINGENT REQUIREMENTS.
3. UNLESS NOTED OTHERWISE, MINIMUM POWER CIRCUIT IS TO BE #12 THWN WITH #12 GROUND IN 3/4" CONDUIT, WITH THE EXCEPTION THAT ANY CIRCUIT LONGER THAN 100 FEET SHALL BE MINIMUM #10 AWG WITH #10 GROUND WIRE. CIRCUIT LONGER THAN 200 FEET SHALL BE MINIMUM #8 AWG WITH #10 GROUND WIRE MINIMUM.
4. ALL EXISTING ID NAMETAGS AND CIRCUIT IDENTIFICATION MUST BE REVISED TO REFLECT CURRENT CONDITIONS FOR ALL EQUIPMENT WHICH IS NEW, REPLACED, OR DEMOLISHED. REMOVE ID NAMETAGS FOR DEMOLISHED EQUIPMENT. REPLACE EXISTING NAMETAGS WITH NEW FOR REPLACED EQUIPMENT, IF REPLACEMENT EQUIPMENT HAS DIFFERENT NAME. PROVIDE NEW NAMETAGS FOR ALL NEW EQUIPMENT. ALL CIRCUIT BREAKER DIRECTORIES FOR PANELS IN WHICH NEW WORK TAKES PLACE ARE TO BE REPLACED WITH NEW DIRECTORIES WHICH LIST EXISTING CIRCUITS AND NEW. ALL UNUSED CIRCUITS ARE TO BE MARKED AS 'SPARE' IN THE DIRECTORIES. DIRECTORIES ARE TO BE COMPUTER GENERATED; NO HAND WRITTEN DIRECTORIES ARE ACCEPTABLE.
5. HAND-WRITTEN CIRCUIT BREAKER DIRECTORIES WILL NOT BE ACCEPTED. DIRECTORIES MUST BE COMPUTER GENERATED AND PRINTED TO REFLECT FINAL INSTALLED CONDITIONS.
6. MARK ALL J-BOXES WITH INDELIBLE INK, INDICATING POWER CIRCUITRY INFORMATION. LABEL ALL EQUIPMENT ITEMS PER SPECIFICATIONS.
7. ALL EXTERIOR RACEWAYS ABOVE GROUND SHALL BE RIGID GALVANIZED.
8. UNDER NO CIRCUMSTANCES SHALL MORE THAN THREE CIRCUITS SHARE THE SAME NEUTRAL, AND SUCH CIRCUITS MUST BE SEPARATE PHASE.
9. USE LONG-SWEEPS ELBOWS FOR ALL CHANGES IN DIRECTION ON CONDUIT RUNS.
10. ALL INTERIOR RACEWAYS SHALL BE EMT.
11. FIELD VERIFY PROJECT SITE EXISTING CONDITIONS AND ELEVATIONS PRIOR TO BEGINNING ANY WORK.
12. PHASING AND SEQUENCE OF CONSTRUCTION SHALL BE PER DRAWINGS AND SPECIFICATIONS.
13. ALL MATERIALS AND LABOR, WHETHER SPECIFICALLY INDICATED ON PLANS OR NOT, WHICH ARE NECESSARY FOR THE PROPER INSTALLATION AND FUNCTION OF THE SYSTEM SHALL BE FURNISHED BY THIS CONTRACTOR. INCLUDE ALL COSTS OF CHANGES, IF/AS REQUIRED IN BID PROPOSAL.
14. ELECTRICAL WIRING SHALL NOT BE SPLICED BELOW GRADE.
15. CONTRACTOR IS RESPONSIBLE FOR ALL PERMITS AND FEES ASSOCIATED WITH PROJECT, INCLUDING FEES FOR INSPECTIONS, APPLICATIONS, AND PROVISION OF NEW SERVICES.
16. CONTRACTOR WHO WILL ACTUALLY PERFORM WORK MUST APPLY FOR ALL REQUIRED PERMITS.
17. NOTIFY ENGINEER OF ANY ASPECTS OF DESIGN WHICH ARE THOUGHT TO BE IN NONCOMPLIANCE WITH APPLICABLE CODES.
18. COORDINATE ALL WORK WITH OTHER TRADES; COORDINATE SCHEDULE OF WORK WITH ALL SUB-CONTRACTORS TO ACHIEVE SMOOTH FLOW OF CONSTRUCTION.
19. SEAL AROUND ELECTRICAL RACEWAYS AT ALL WALLS AND WALL LOUVER PENETRATIONS WITH FIREPROOF CAULKING. RE: SPECS. PROVIDE FLASHING AROUND PENETRATION, BOTH INSIDE AND OUTSIDE, TO PROVIDE FINISHED LOOK.
20. CONTRACTOR SHALL REVIEW COMPLETE DOCUMENTS PRIOR TO SUBMITTAL OF PROPOSAL TO GAIN COMPLETE UNDERSTANDING OF PROJECT SCOPE, WORK BY OTHERS, AND ELECTRICAL WORK ASSOCIATED WITH OTHER DISCIPLINES.
21. MAINTAIN MANUFACTURER RECOMMENDED CLEARANCE AROUND ALL EQUIPMENT.
22. AFFIX ID TAGS TO ALL DIVISION 26 EQUIPMENT.
23. FIELD VERIFY ALL CONDITIONS AND MEASURE DIMENSIONS WITHIN THE BUILDING PRIOR TO ORDERING EQUIPMENT AND/OR PROCEEDING WITH INSTALLATION.
24. ALL EQUIPMENT SHALL BE FACTORY TESTED, AND CONTRACTOR SHALL VERIFY THEIR CONDITION PRIOR TO INSTALLATION. CONTRACTOR IS RESPONSIBLE FOR EQUIPMENT DAMAGED DURING MOVING AND INSTALLATION.
25. EQUIPMENT FOUND DEFECTIVE PRIOR TO FINAL ACCEPTANCE SHALL BE REPLACED AT NO COST TO OWNER.
26. SLEEVE ALL EXTERIOR WALL PENETRATIONS.

KEYED NOTES:

1. APPROXIMATE LOCATION OF EXISTING ELECTRIC UTILITY (BPUB) PAD MOUNT TRANSFORMER.
2. APPROXIMATE LOCATION OF EXISTING ELECTRIC UTILITY (BPUB) SERVICE METER.
3. APPROXIMATE LOCATION OF PANELBOARD "MDP".
4. APPROXIMATE LOCATION OF EXISTING DATA RACK.
5. EXISTING 3Ø ELECTRIC UTILITY (BPUB) OVERHEAD SERVICE LINES.
6. EXISTING ELECTRIC UTILITY (BPUB) POWER POLE.
7. PROPOSED NEW ELECTRIC UTILITY (BPUB) POWER POLE WITH RISER DIP POLE.
8. PROVIDE UNDERGROUND PRIMARY RACEWAYS.
9. ELECTRIC UTILITY EASEMENT. SEE CIVIL DRAWINGS.
10. PROPOSED ELECTRIC UTILITY (BPUB) PAD MOUNT TRANSFORMER. PROVIDE CONCRETE PAD – SEE DETAIL.
11. PROVIDE ELECTRIC UNDERGROUND SECONDARY LINE.
12. EXISTING ELECTRIC UTILITY (BPUB) POWER POLE WITH RISER DIP POLE.
13. PROVIDE RACEWAYS FOR FUTURE USE.

NO:	REVISION:	BY:

COPY NO:

STATE OF TEXAS
CESAR A. GONZALEZ
108611
LICENSED
PROFESSIONAL ENGINEER
03.23.2026

HVAC UPGRADES AT BROWNSVILLE ANIMAL REGULATION AND CARE FACILITY

OLMITO, TEXAS

F.M. 511

ethos engineering
1126 SOUTH COMMERCE ST.
HARLINGEN, TX.
PHONE: 956-230-3435
TEXAS REGISTERED ENGINEERING FIRM
F-15998

DATE:	MARCH 23. 2026
CHECKED BY:	C.A.G.
DRAWN BY:	C.G.
PROJECT NO.:	24v67
CAD FILE:	-
SHEET:	ES1.0

ABBREVIATIONS:

A	AMPS	EXT.	EXTERNAL OR EXTERIOR	MOCP	MAX. OVERCURRENT PROTECTION
ABC	ABOVE CEILING LINE	FACP	FIRE ALARM CONTROL PANEL	NTS	NOT TO SCALE
ACCU	AIR COOLED CONDENSING UNIT	G.	GROUND	P	POLE(S)
AFF	ABOVE FINISHED FLOOR	GA.	GAGE	PH	PHASE
B.	BOTTOM	GALV.	GALVANIZED	RM.	ROOM
BLC.	BELOW CEILING LINE	GRND.	GROUND	SS	STAINLESS STEEL
C.	CONDUIT OR COMMON	HP	HORSEPOWER	TSTAT	THERMOSTAT
CLG.	CEILING	HVAC	HEATING, VENTILATION, & AIR CONDITIONING	UG	UNDERGROUND
COMB.	COMBINATION			UNO	UNLESS OTHERWISE NOTED
COND.	CONDUIT	INT.	INTRUSION DETECTION	V	VOLTS
CU.	COPPER	MECH	MECHANICAL	WACU	WALL AIR CONDITIONING UNIT.
DISC.	DISCONNECT	MS	MOTOR STARTER	W	WIRE

SCOPE OF WORK:

1. GENERAL: THE "HVAC UPGRADES AT BROWNSVILLE ANIMAL REGULATION AND CARE FACILITY" CONSISTS OF AN EXISTING SINGLE-STORY BUILDING, APPROXIMATE 13,800 S.F. THIS BUILDING WILL GENERALLY BE OPERATED FROM 8:00AM TO 5:00PM. (MONDAY THROUGH FRIDAY) WITH OCCASIONAL AFTER HOURS AND WEEKENDS USE.
2. ELECTRICAL: PROVIDE ALL MATERIALS AND LABOR ASSOCIATED WITH COMPLETE OPERATIONAL ELECTRICAL DISTRIBUTION SYSTEM. MAJOR ITEMS OF WORK INCLUDE, BUT ARE NOT LIMITED TO:
   (A) ELECTRICAL SERVICE:
   (I) PROVIDE A NEW UNDERGROUND ELECTRICAL SERVICE; IT SHALL CONSIST OF UNDERGROUND ELECTRICAL RACEWAYS AND CONCRETE PAD FOR UTILITY FURNISHED PAD MOUNTED TRANSFORMER.
   (II) UTILITY COMPANY SHALL PROVIDE MEDIUM VOLTAGE CONDUCTORS AND PAD TRANSFORMER.
   (B) DEMOLITION: DISCONNECT AND REMOVE EXISTING PANELBOARDS AND HVAC EQUIPMENT AS NOTED ON DRAWINGS.
   (C) EXTERIOR LIGHTING SYSTEMS: PROVIDE LED TYPE, SEE LIGHT FIXTURE SCHEDULE AND SPECIFICATIONS.
   (D) POWER SYSTEMS: PROVIDE MISCELLANEOUS DUPLEX RECEPTACLES AND POWER FOR H.V.A.C. AND EQUIPMENT.
   (E) COMMISSIONING: PROVIDE FOR THE LIGHTING EQUIPMENT AND LIGHTING CONTROLS AS REQUIRED PER IECC 2018.
   (F) VOICE AND DATA COMMUNICATION CABLING EQUIPMENT: PROVIDE CABLING AND CONNECTORS FOR END TO END CONNECTIVITY.

DEMOLITION GENERAL NOTES:

1. REFER TO DRAWINGS AND SPECIFICATIONS FOR PHASING REQUIREMENTS.
2. THE EXTENT OF DEMOLITION WORK IS INDICATED ON THE ARCHITECTURAL DRAWINGS AND BY THE REQUIREMENTS OF THIS SECTION. A VISIT TO THE SITE IS REQUIRED TO PROPERLY BID THE DEMOLITION WORK.
3. REMOVED MATERIALS SHALL BELONG TO OWNER. DELIVER THEM TO OWNERS DESIGNATED LOCATION. IF OWNER DOES NOT WANT THE REMOVED MATERIALS THEN REMOVE THEM FROM SITE & PROPERLY DISPOSE OF THEM.
4. IF REMOVAL OF EXISTING ELECTRICAL SYSTEMS RENDERS EXISTING ELECTRICAL SYSTEMS DOWNSTREAM TO REMAIN INOPERABLE, PROVIDE J-BOXES, CONDUIT WIRING AND SPLICES ABOVE ACCESSIBLE CEILINGS IN ORDER TO CONTINUE OPERATION.
5. PROVIDE BLANK COVER PLATE FOR UNUSED BACK BOXES.

CEILING GENERAL NOTES:

1. PRIOR TO REMOVAL OF CEILINGS REQUIRED FOR SPECIAL SYSTEMS OR ELECTRICAL WORK PREPARE REFLECTED CEILING PLAN SKETCH SHOWING LOCATIONS OF ALL CEILING COMPONENTS AND DEVICES TO BE RE-USED INCLUDING BUT NOT LIMITED TO: EXISTING LIGHT FIXTURES, SPEAKERS, EMERGENCY LIGHTING, WIRELESS ACCESS POINTS, ETC. IF ANY OF THE ABOVE ITEMS ARE IN NON-WORKING CONDITION, SUBMIT A WRITTEN REPORT TO OWNER/ENGINEER.
2. CONTRACTOR TO EVALUATE CEILING GRID CEILING TILES PRIOR TO REMOVAL AND DOCUMENT ALL BROKEN, CRACKED, MISSING TILES, ETC. AND PROVIDE REPORT TO OWNER AND ENGINEER.
3. CEILING TILES DAMAGED BY CONTRACTOR SHALL BE REPLACED BY CONTRACTOR. MATCH EXISTING.
4. ELECTRICAL CONTRACTOR IS RESPONSIBLE FOR DETERMINING THEIR OWN ROUTES FROM POWER SOURCE AND OR HEAD-END TO EQUIPMENT.

GENERAL SYMBOL LEGEND:

SYMBOL	DESCRIPTION	MNTG. HT. UNO
	ELECTRICAL PANELBOARD – SURFACE MOUNTED	AS REQUIRED
— — —	UNDERGROUND RACEWAY	AS REQUIRED
———	CONCEALED RACEWAY	AS REQUIRED
	CONDUIT OR EMT HOMERUN TO PANELBOARD CONCEALED IN WALLS OR ABOVE CEILING. LONG CROSSMARKS DENOTE NUMBER OF "HOT" CONDUCTORS SHORT CROSSMARKS INDICATE NEUTRALS AND DOTS INDICATE NUMBER OF GROUND CONDUCTORS. ARROW INDICATES HOME RUN TO ELECTRICAL PANEL.	AS REQUIRED
	EQUIPMENT CONNECTION	AS REQUIRED
	DISCONNECT SWITCH – NON FUSED	AS REQUIRED
	DISCONNECT SWITCH – FUSED	AS REQUIRED

WIRING DEVICES SYMBOL LEGEND:

SYMBOL	DESCRIPTION	MNTG. HT. UNO (SEE NOTE 1)
	DUPLEX TAMPER RESISTANT RECEPTACLE – HUBBELL MODEL #BR20WTR (WHITE)	18"AFF
	POLYMER CONCRETE PULL BOX W/ LOGO COVER – SEE DETAIL	AS REQUIRED
	JUNCTION BOX W/ BLANK COVERPLATE	AS REQUIRED

NOTES:

1.) U.N.O. INDICATES UNLESS NOTED OTHERWISE.
18" AFF INDICATES TO TOP OF DEVICE;
ALL OTHER MOUNTING HEIGHTS REFER TO CENTERLINE OF DEVICE.

SPECIAL SYSTEMS SYMBOL LEGEND:

SYMBOL	DESCRIPTION	MNTG. HT. UNO (SEE NOTE 1)
	DATA OUTLET/VOICE OVER IP – PROVIDE BACK BOX WITH 1" RACEWAY STUBBED INTO ACCESSIBLE CLG. WITH PULL WIRE – SEE DETAIL.	18"AFF

NOTES:

1.) 48" AFF INDICATES TO TOP OF DEVICE;
ALL OTHER MOUNTING HEIGHTS REFER TO CENTERLINE OF DEVICE.

LIGHTING SYMBOL LEGEND:

SYMBOL	DESCRIPTION	MNTG. HT. UNO (SEE NOTE 1)
	SURFACE/WRAPAROUND LIGHT FIXTURE	– – – –
	WALLPACK WALL MOUNTING	– – – –

NOTES:

1.) REFERENCE LIGHT FIXTURE SCHEDULE FOR ALL MOUNTING HEIGHTS.

LIGHTING WIRING DEVICES SYMBOL LEGEND:

SYMBOL	DESCRIPTION	MNTG. HT. UNO (SEE NOTE 1)
S_{WP}	SINGLE POLE TOGGLE SWITCH – HUBBELL MODEL #HBL1221X WITH WEATHERPROOF COVER PLATE – HUBBELL MODEL #HBL7420	48"AFF

NOTES:

1.) 48" AFF INDICATES TO TOP OF DEVICE;
ALL OTHER MOUNTING HEIGHTS REFER TO CENTERLINE OF DEVICE.

NO: REVISION: BY:

COPY NO:

STATE OF TEXAS
CESAR A. GONZALEZ
108611
LICENSED
PROFESSIONAL ENGINEER
03.23.2026

HVAC UPGRADES AT BROWNSVILLE ANIMAL REGULATION AND CARE FACILITY

OLMITO, TEXAS

F.M. 511

ethos engineering
1126 SOUTH COMMERCE ST.
HARLINGEN, TX
PHONE: 956.230.3435
TEXAS REGISTERED
ENGINEERING FIRM
F-15996

DATE: MARCH 23, 2026
CHECKED BY: C.A.G.
DRAWN BY: C.G.
PROJECT NO.: 24v67
CAD FILE: -
SHEET: E1.0

ELECTRICAL KEYED NOTES:

1. APPROXIMATE LOCATION OF EXISTING PANELBOARD SERVING EXISTING HVAC EQUIPMENT.
2. APPROXIMATE LOCATION OF EXISTING PANELBOARD SERVING EXISTING EF.
3. DISCONNECT EXISTING EXHAUST FAN TO BE REPLACED. RETAIN EXISTING BRANCH CIRCUIT. SEE EQUIPMENT CONNECTION SCHEDULE.
4. DISCONNECT EXISTING HVAC EQUIPMENT ALONG WITH RELATED WIRING, RACEWAY, SAFETY SWITCH AND SUPPORT HARDWARE FROM EQUIPMENT ALL THE WAY BACK TO POWER SOURCE.
5. DISCONNECT EXISTING EXHAUST FAN ALONG WITH RELATED WIRING, RACEWAY, SAFETY SWITCH AND SUPPORT HARDWARE FROM EQUIPMENT ALL THE WAY BACK TO POWER SOURCE.

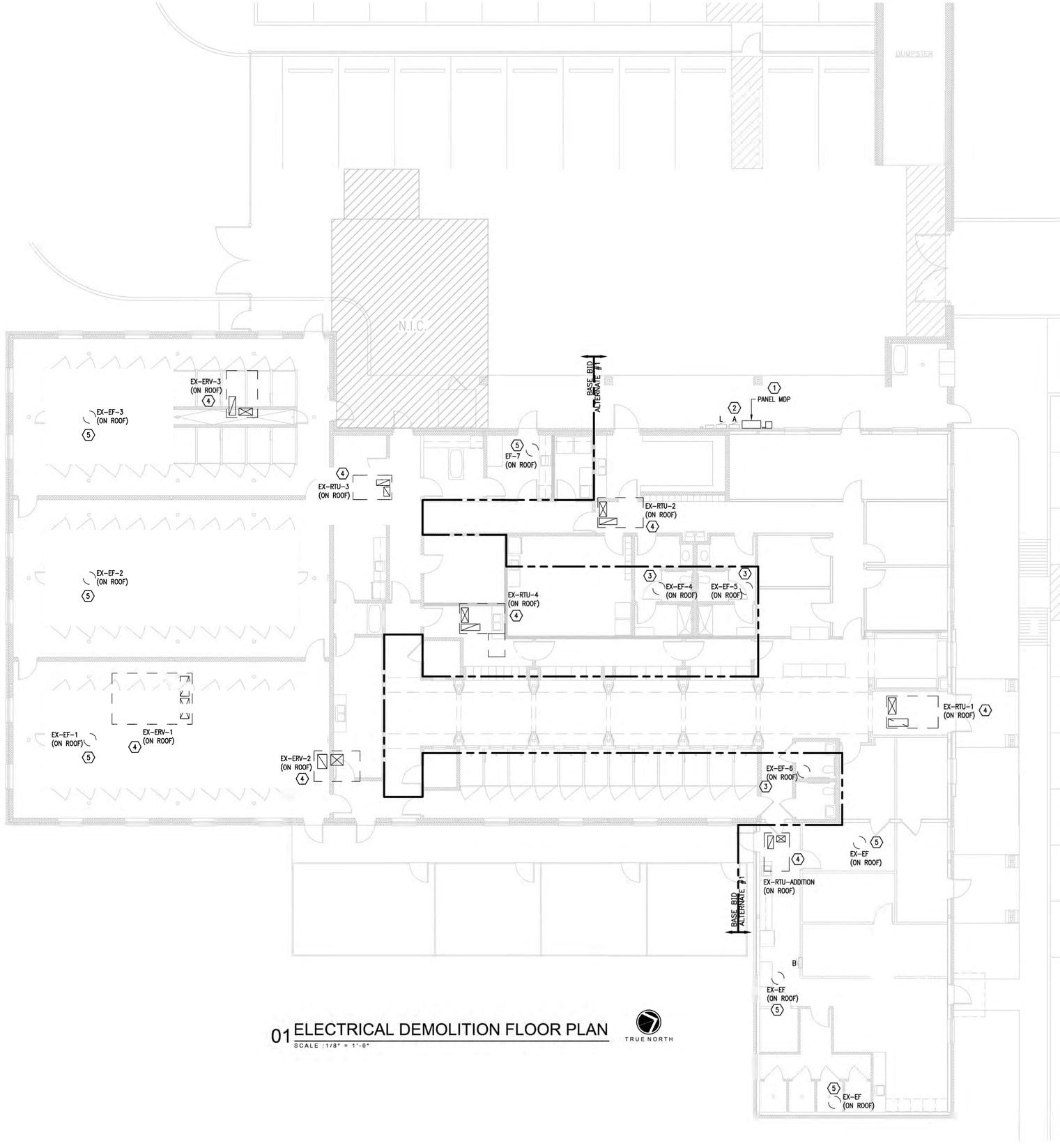

01 ELECTRICAL DEMOLITION FLOOR PLAN
SCALE :1/8" = 1'-0"

TRUE NORTH

NO: REVISION: BY:

COPY NO:

STATE OF TEXAS
CESAR A. GONZALEZ
108611
LICENSED PROFESSIONAL ENGINEER
03.23.2026

HVAC UPGRADES AT BROWNSVILLE ANIMAL REGULATION AND CARE FACILITY

OLMITO, TEXAS

F.M. 511

ethos engineering
1126 SOUTH COMMERCE ST.
HARLINGEN, TX
PHONE: 956-230-3435
TEXAS REGISTERED
ENGINEERING FIRM
F-15998

DATE: MARCH 23. 2026
CHECKED BY: C.A.G.
DRAWN BY: C.G.
PROJECT NO.: 24v67
CAD FILE: -
SHEET: E2.1

ELECTRICAL KEYED NOTES:

1. DISCONNECT EXISTING EXHAUST FAN TO BE REPLACED. RETAIN EXISTING BRANCH CIRCUIT. SEE EQUIPMENT CONNECTION SCHEDULE.
2. DISCONNECT EXISTING HVAC EQUIPMENT ALONG WITH RELATED WIRING, RACEWAY, SAFETY SWITCH AND SUPPORT HARDWARE FROM EQUIPMENT ALL THE WAY BACK TO POWER SOURCE.
3. DISCONNECT EXISTING EXHAUST FAN ALONG WITH RELATED WIRING, RACEWAY, SAFETY SWITCH AND SUPPORT HARDWARE FROM EQUIPMENT ALL THE WAY BACK TO POWER SOURCE.

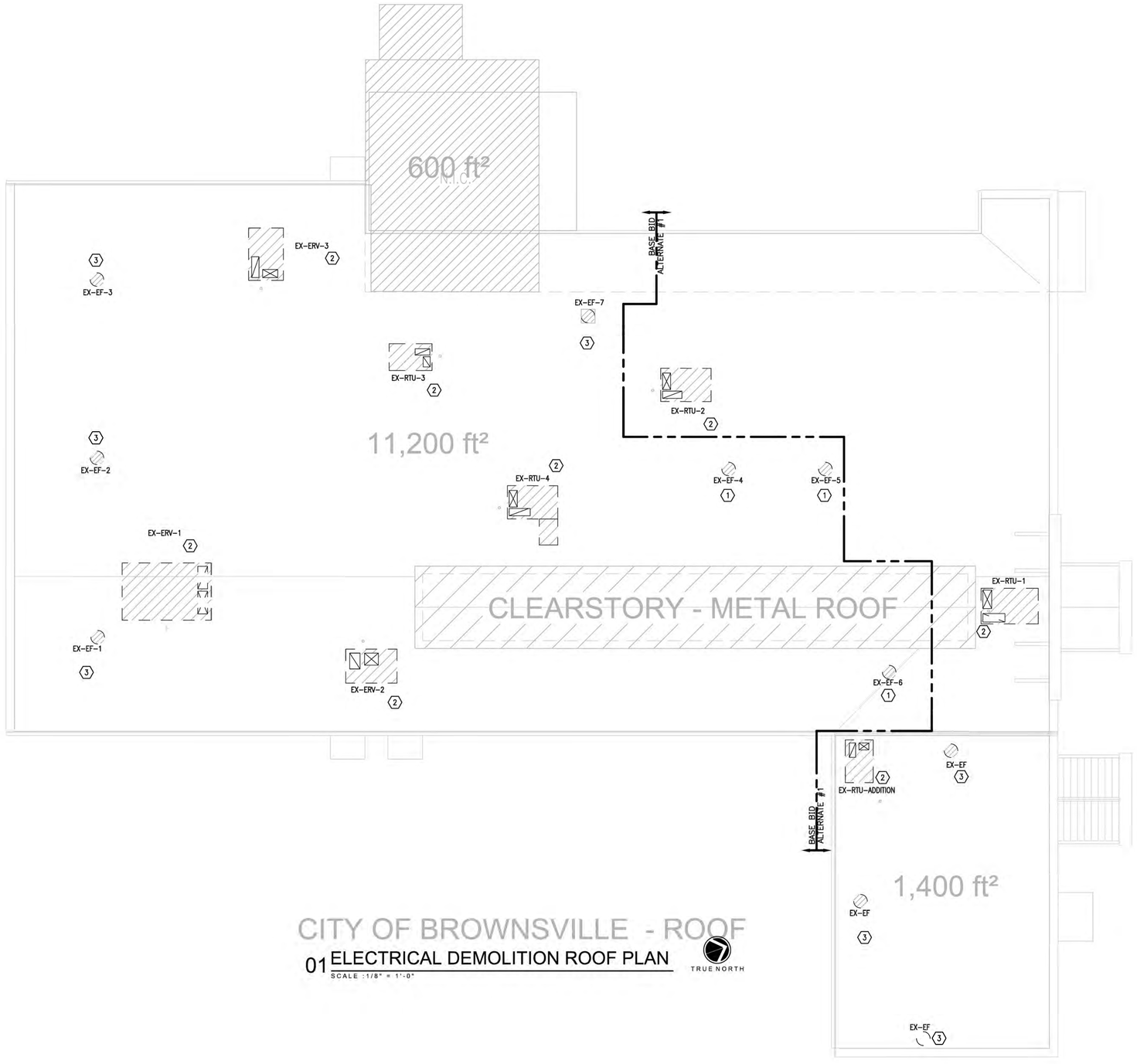

CITY OF BROWNSVILLE - ROOF

01 ELECTRICAL DEMOLITION ROOF PLAN

SCALE : 1/8" = 1'-0"

TRUE NORTH

NO:	REVISION:	BY:

COPY NO:

STATE OF TEXAS
CESAR A. GONZALEZ
108611
LICENSED PROFESSIONAL ENGINEER
03.23.2026

HVAC UPGRADES AT BROWNSVILLE ANIMAL REGULATION AND CARE FACILITY

OLMITO, TEXAS

F.M. 511

ethos engineering
1126 SOUTH COMMERCE ST.
HARLINGEN, TX.
PHONE: 956-230-3435
TEXAS REGISTERED
ENGINEERING FIRM
F-15998

DATE:	MARCH 23. 2026
CHECKED BY:	C.A.G.
DRAWN BY:	C.G.
PROJECT NO.:	24v67
CAD FILE:	-
SHEET:	E2.2

ELECTRICAL KEYED NOTES:

1. APPROXIMATE LOCATION OF NEW PANELBOARD SERVING NEW HVAC EQUIPMENT.
2. APPROXIMATE LOCATION OF NEW PANELBOARD SERVING NEW EF.
3. CONNECT NEW EF. RETAIN AND REUSE EXISTING BRANCH CIRCUIT.
4. CONNECT DDC PANELS TO NEW PANEL "C"; BRANCH CIRCUIT: 1/2" – 2#12 & #12G.
5. CONNECT NEW EF. SEE EXHAUST FAN CONNECTION SCHEDULE.
6. CONNECT NEW HVAC EQUIPMENT. SEE CONNECTION SCHEDULE.

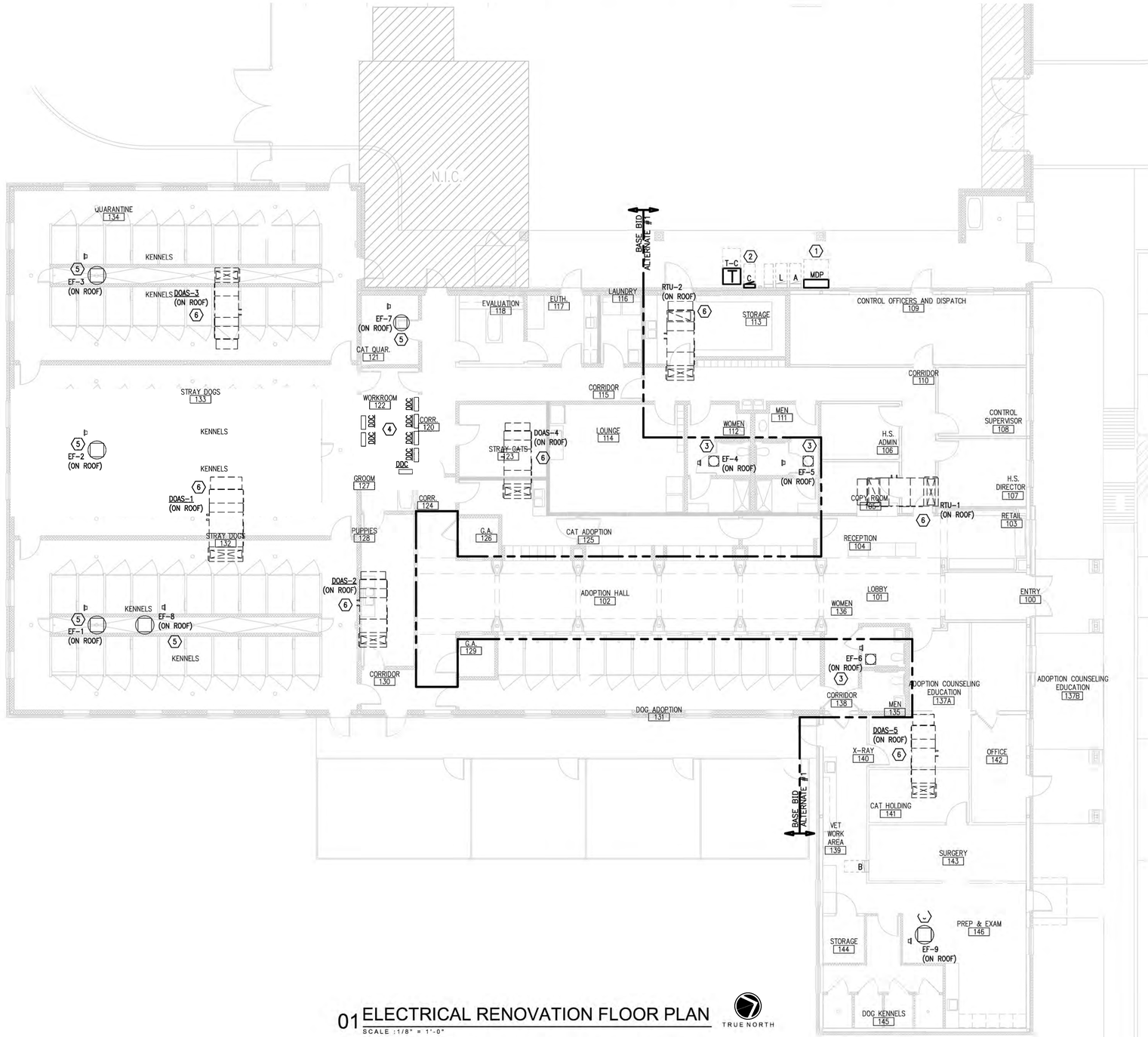

01 ELECTRICAL RENOVATION FLOOR PLAN
SCALE : 1/8" = 1'-0"

TRUE NORTH

NO:	REVISION:	BY:

COPY NO:

STATE OF TEXAS
CESAR A. GONZALEZ
108611
LICENSED
PROFESSIONAL ENGINEER
03.23.2026

HVAC UPGRADES AT BROWNSVILLE ANIMAL REGULATION AND CARE FACILITY

OLMITO, TEXAS

F.M. 511

ethos engineering
1126 SOUTH COMMERCE ST.
HARLINGEN, TX
PHONE: 956-230-3435
TEXAS REGISTERED
ENGINEERING FIRM
F-15998

DATE:	MARCH 23. 2026
CHECKED BY:	C.A.G.
DRAWN BY:	C.G.
PROJECT NO.:	24v67
CAD FILE:	-
SHEET:	E3.1

ELECTRICAL KEYED NOTES:

1. CONNECT NEW EF. RETAIN AND REUSE EXISTING BRANCH CIRCUIT.
2. CONNECT NEW EF. SEE EXHAUST FAN CONNECTION SCHEDULE.
3. CONNECT NEW HVAC EQUIPMENT. SEE CONNECTION SCHEDULE. CONNECT INTEGRAL RECEPTACLE TO NEAREST 120V NON-GFCI CIRCUIT; BRANCH CIRCUIT 1/2" - #12 & #12G. VERIFY EXISTING LOAD PRIOR TO ANY NEW CONNECTION.

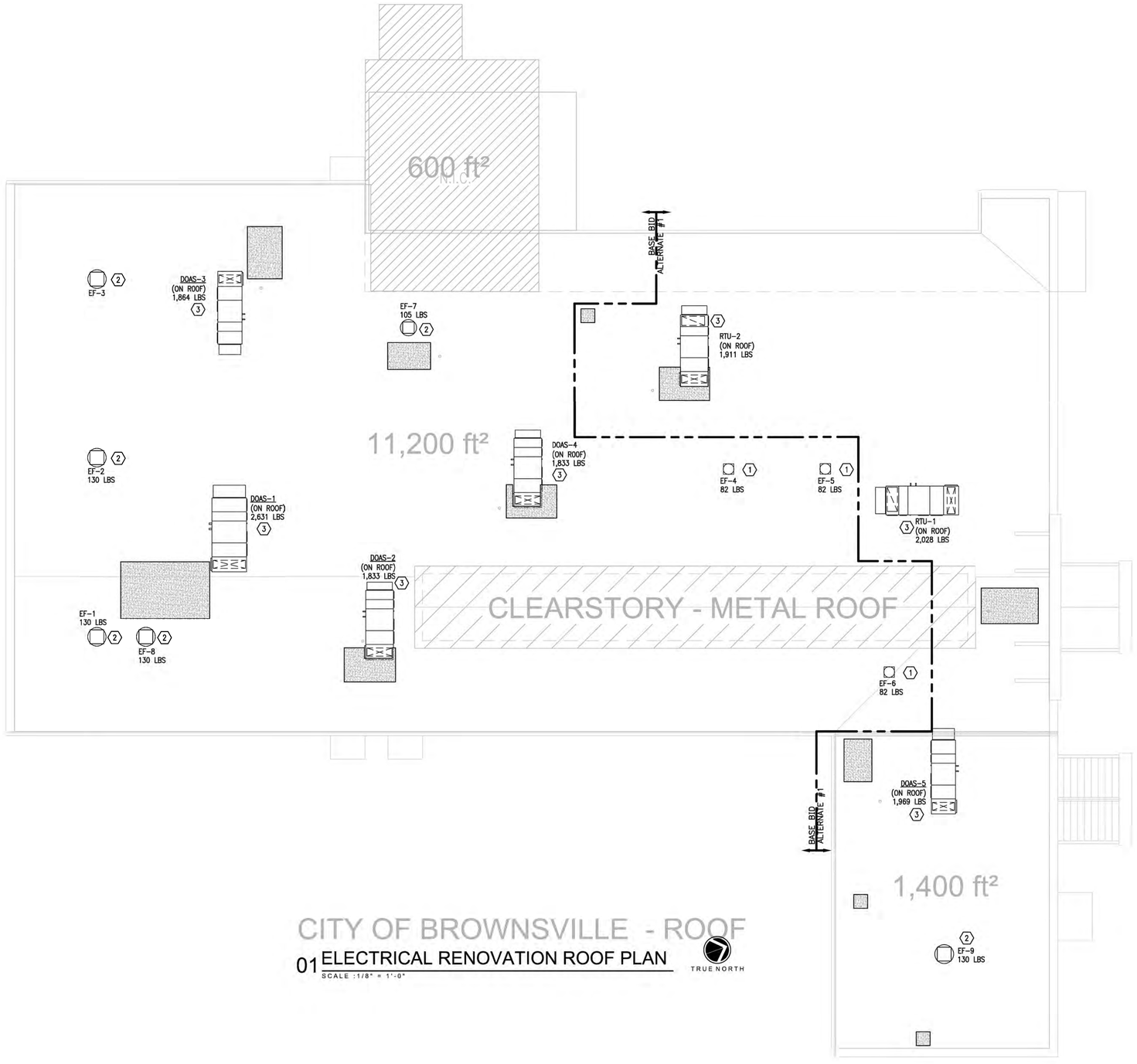

01 ELECTRICAL RENOVATION ROOF PLAN

SCALE :1/8" = 1'-0"

TRUE NORTH

NO:	REVISION:	BY:

COPY NO:

STATE OF TEXAS
CESAR A. GONZALEZ
108611
LICENSED PROFESSIONAL ENGINEER
03.23.2026

HVAC UPGRADES AT BROWNSVILLE ANIMAL REGULATION AND CARE FACILITY

OLMITO, TEXAS

F.M. 511

ethos engineering
1126 SOUTH COMMERCE ST.
HARLINGEN, TX.
PHONE: 956-230-3435
TEXAS REGISTERED
ENGINEERING FIRM
F-15998

DATE:	MARCH 23. 2026
CHECKED BY:	C.A.G.
DRAWN BY:	C.G.
PROJECT NO.:	24v67
CAD FILE:	-
SHEET:	E3.2

LUMINAIRE SCHEDULE

CALLOUT	LAMP	DESCRIPTION	DRIVER	MOUNTING	MODEL	INPUT WATTS	VOLTS	NOTES	LUMEN MAINTENANCE	HOURS	LUMENS
A	LED	WRAPAROUND	0-10V	SURFACE	BEGHELLI: BS101LED 4 HT LO WT40 120-277V SS TPS VENTURE: VP4-40NA-BF1 TRITONPRO: VTSS1 4 B15 UNV FD 8CS4K LPFG HW SP	40	MULTIPLE	PROVIDE UL LISTED FOR DAMP LOCATIONS.	L70	100,000	6536
B	LED	WALLPACK	0-10V	SURFACE	LITHONIA: TWR2 LED ALO SWW2 UVOLT PE DDBTXD	90	MULTIPLE	PROVIDE UL LISTED FOR WET LOCATIONS AND BRONZE FINISH.	LM80	50,000	9900
C	LED	WALLPACK	0-10V	SURFACE	LITHONIA: WDGE1 LED P2 40K 80CRI VF MVOLT DDBXD	15	MULTIPLE	PROVIDE UL LISTED FOR WET LOCATIONS AND BRONZE FINISH.	L80	50,000	2000

GENERAL NOTES:
1. LIGHT FIXTURE EQUALS MANUFACTURED BY SIGNIFY AND COOPER ARE ACCEPTABLE, PROVIDED THEY MEET OR EXCEED SPECIFICATIONS (AESTHETICS, CONSTRUCTION, PHOTOMETRICS, DLC, ENERGY STAR).
2. EXTRA MATERIALS: SEE SPECIFICATIONS.
3. INCLUDE VERIFICATION OF LIGHT FIXTURE EFFECIANCY IN LIGHT FIXTURE SUBMITTALS BY ATTACHING ONE OF THE FOLLOWING:
* SCREENSHOT OF DLC WEBSITE LISTING FOR SPECIFIC LIGHT FIXTURE. CAN BE FOUND AT HTTPS://WWW.DESIGNLIGHTS.ORG
* SCREENSHOT OF ENERGY STAR WEBSITE LISTING FOR SPECIFIC LIGHT FIXTURE. CAN BE FOUND AT HTTPS://WWW.ENERGYSTAR.GOV
* PART EFFICIENCY DOCUMENTATION IN THE FORM OF LM-79 OR LM-80 DOCUMENTS WITH ADDITIONAL DOCUMENTATION DISPLAYING THE LINK BETWEEN THE PART AND THE LIGHT FIXTURE.

02 LIGHT FIXTURE TYPE "A" IMAGE
SCALE : NOT TO SCALE

03 LIGHT FIXTURE TYPE "B" IMAGE
SCALE : NOT TO SCALE

04 LIGHT FIXTURE TYPE "C" IMAGE
SCALE : NOT TO SCALE

ELECTRICAL KEYED NOTES:

1. MOUNT FIXTURE TYPE "A" TO BOTTOM OF STRUCTURE STEEL WITH UNISTRUT – TYPICAL.
2. WALL MOUNT LIGHT FIXTURE TYPE "B" 7'-0" TO TOP OF FIXTURE – TYPICAL.
3. WALL MOUNT LIGHT FIXTURE TYPE "C" 7'-0" TO TOP OF FIXTURE – TYPICAL.
4. PROVIDE 1" UNDERGROUND RACEWAY FROM DDC PANEL LOCATION TO MAIN BUILDING. FOLLOW PATH OF HVAC CHILLER LINES.
5. NO PIPING TO BE ROUTED ABOVE PANELBOARDS. COORDINATE WITH OTHER TRADES – TYPICAL.
6. CONNECT NEW VFD. REFER TO EQUIPMENT CONNECTION SCHEDULE – TYPICAL.
7. PROVIDE UNDERGROUND ELECTRICAL FEEDERS. FOLLOW PATH OF HVAC CHILLER LINES.
8. STUB-UP RACEWAYS ALONG EXISTING EXTERIOR WALL AND PENETRATE BUILDING AT AN ACCESSIBLE LOCATION ABOVE THE CEILING.
9. CONNECT DDC PANELS TO NEW PANEL "MPZ"; BRANCH CIRCUIT: 1/2" – 2#12 & #12G.
10. PROVIDE HOMERUN TO PANELBOARD UNDERGROUND. ALL RACEWAYS AND BOXES SERVING LIGHTING FIXTURES AND ELECTRICAL OUTLETS SHALL BE CONCEALED WITHIN WALLS. THERE SHALL BE NO EXPOSED RACEWAY AND BOXES.
11. PROVIDE UNDERGROUND FEEDER.
12. PROVIDE FOR FUTURE USE.

ELECTRICAL GENERAL NOTES:

1. ELECTRICAL BRANCH CIRCUIT HOMERUNS SHALL BE 3/4" – 2#12 & #12G. 20A/120V HOMERUNS EXCEEDING 100FT, THE WIRE SIZE SHALL BE #10 & #8 FOR 175'.
2. EACH 20A/1P BRANCH CIRCUIT SHALL HAVE A DEDICATED NEUTRAL.
3. PROVIDE ALL CONDUIT IN WALL CAVITY WHERE POSSIBLE.
4. PROVIDE ALL ELECTRICAL RECEPTACLES INSTALLED WITH THE GROUND OPENING IN THE "UP" POSITION.
5. HOMERUNS – INSTALL NO MORE THAN THREE PER RACEWAY (INCLUDING LIGHTING BRANCH CIRCUITS); 3 INSULATED "HOT", 3 INSULATED "NEUTRAL AND 1 SHARED "GROUND".

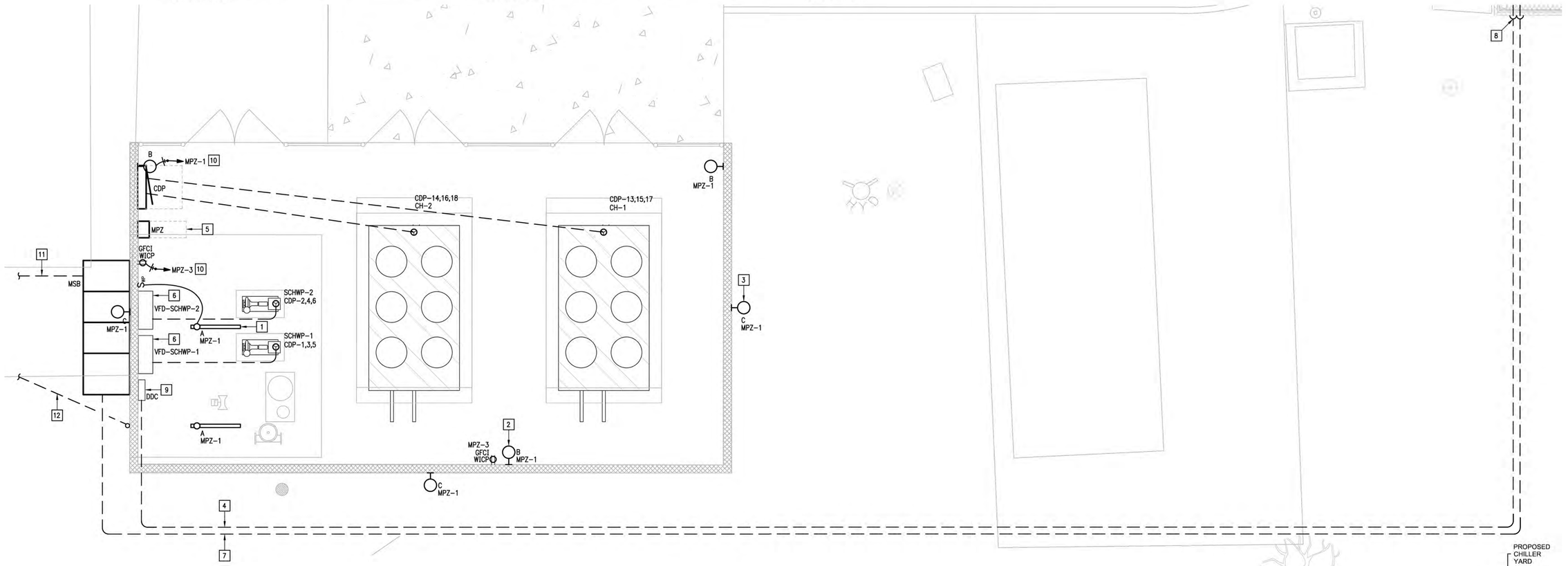

01 ENLARGED CENTRAL PLANT ELECTRICAL ROOF PLAN
SCALE : 1/4" = 1'-0"

TRUE NORTH

NO:	REVISION:	BY:

COPY NO:

STATE OF TEXAS
CESAR A. GONZALEZ
108611
LICENSED PROFESSIONAL ENGINEER
03.23.2026

OLMITO, TEXAS

HVAC UPGRADES AT BROWNSVILLE ANIMAL REGULATION AND CARE FACILITY

F.M. 511

ethos engineering
1126 SOUTH COMMERCE ST.
HARLINGEN, TX
PHONE: 956-230-3435
TEXAS REGISTERED
ENGINEERING FIRM
F-15998

DATE:	MARCH 23. 2026
CHECKED BY:	C.A.G.
DRAWN BY:	C.G.
PROJECT NO.:	24v67
CAD FILE:	-
SHEET:	E3.3

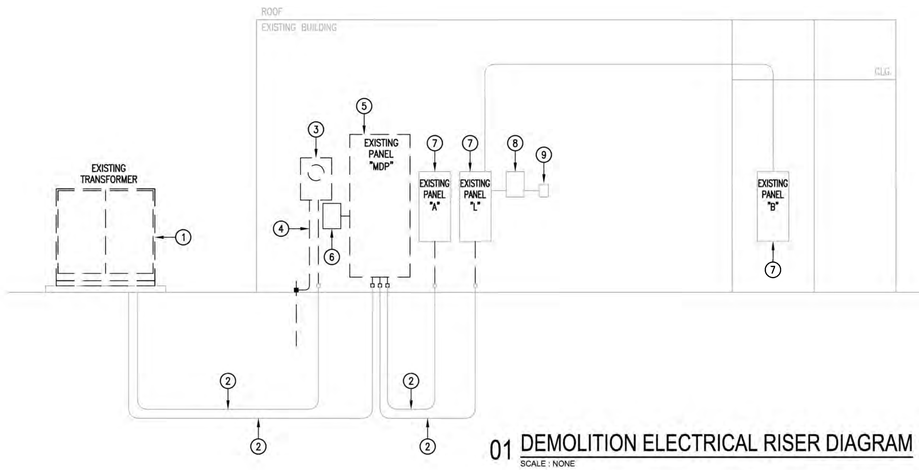

01 DEMOLITION ELECTRICAL RISER DIAGRAM
SCALE : NONE

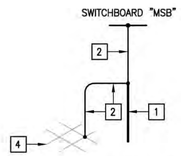

GROUNDING RISER KEYED NOTES:

1. PROVIDE 3/4" X 10 COPPER CLAD GROUND ROD.
2. PROVIDE #3/0 BARE COPPER GROUNDING ELECTRODE CONDUCTOR.
3. CADWELD CONNECT TO BUILDING REBAR.

03 GROUNDING RISER DIAGRAM
SCALE : NONE

FEEDER SCHEDULE:

FEEDER AMPS	CONDUIT AND FEEDER	FEEDING THESE DEVICES
30	3/4" – 2#10 & #10G	MPZ
150	2" – 4#1/0 & #6G	L
225	2.5" – 4#4/0 & #4G	A
400	4" – 4#600KCMIL & #3G	C
600	(2–RUNS EACH) 3" – 4#350KCMIL & #1G	CDP, MDP
1600	(4–RUNS EACH) 4" – 4#600KCMIL	MSB

SIZING METHOD: COPPER 75°C

KEYED NOTES:

1. EXISTING ELECTRIC UTILITY PAD MOUNT TRANSFORMER. COORDINATE REMOVAL WITH BPUB.
2. DISCONNECT AND REMOVE EXISTING PANELBOARD FEEDER. ABANDON RACEWAY IN PLACE AND CAP.
3. DISCONNECT AND REMOVE EXISTING ELECTRIC UTILITY METER ALONG WITH RELATED WIRING, RACEWAY, AND SUPPORT HARDWARE.
4. DISCONNECT AND REMOVE EXISTING GROUNDING ALONG WITH RELATED WIRING, RACEWAY AND SUPPORT HARDWARE.
5. DISCONNECT AND REMOVE EXISTING PANELBOARD ALONG WITH RELATED WIRING, RACEWAY AND SUPPORT HARDWARE. TEMPORARILY DISCONNECT EXISTING BRANCH CIRCUITS TO REMAIN.
6. DISCONNECT AND REMOVE EXISTING SPD ALONG WITH RELATED WIRING, RACEWAY AND SUPPORT HARDWARE.
7. EXISTING PANELBOARD TO REMAIN AS IS.
8. EXISTING LIGHTING CONTACTOR TO REMAIN AS IS.
9. EXISTING TIME CLOCK TO REMAIN AS IS.

MSB

ROOM CENTRAL PLANT — VOLTS 480Y/277V 3P 4W — AIC 65,000
MOUNTING FLOOR — BUS AMPS 1600 — MAIN BKR MLO
FED FROM UTILITY — NEUTRAL 100% — LUGS STANDARD
NOTE PROVIDE PHENOLIC CIRCUIT BREAKER IDENTIFICATION NAMETAGS PER SPECIFICATIONS.

CKT #	BREAKER TRIP/POLES	CIRCUIT DESCRIPTION	LOAD KVA A	LOAD KVA B	LOAD KVA C	FEEDER RACEWAY AND CONDUCTORS
1	600/3	PANEL CDP	86.5	86.5	86.1	SEE FEEDER SCHEDULE
2	600/3	PANEL MDP	125	124	124	SEE FEEDER SCHEDULE
3	400/3	SPARE	0	0	0	–
		TOTAL CONNECTED KVA BY PHASE	212	211	210	

	CONN KVA	CALC KVA			CONN KVA	CALC KVA	
LIGHTING	0.395	0.494	(125%)	CONTINUOUS	1.37	1.72	(125%)
LARGEST MOTOR	120	30	(25%)	HEATING	235	0	(0%)
MOTORS	50.8	50.8	(100%)	COOLING	240	240	(100%)
RECEPTACLES	0.36	0.36	(50%>10)	DIVERSE	104	104	(100%)
				TOTAL LOAD		428	
				BALANCED 3-PHASE LOAD		515 A	

NOTES:
1. PROVIDE NEMA 4X SS OUTDOOR ENCLOSURE.
2. PROVIDE INTEGRAL MOUNTED 200KA "SPD".
3. PROVIDE INTEGRAL DIGITAL MULTI-METER.
4. PROVIDE A MIMIC BUS.
5. LABEL EACH BREAKER WITH AN ENGRAVED NAMEPLATE.
6. PROVIDE SWITCHBOARD SERVICE ENTRANCE RATED.
7. PROVIDE BRANCH CIRCUIT BREAKERS THERMAL MAGNETIC TYPE.
8. PROVIDE SWITCHBOARD TO COMPLY WITH 2020 NEC 230.71(B).

BROWNSVILLE PUBLIC UTILITIES BOARD
ELECTRICAL ENGINEERING DEPARTMENT

Date: MARCH 23, 2026

CUSTOMER CONTACT INFORMATION

Name: J.P. VILLARREAL
Address: 6035 JAIME J. ZAPATA AVE., BUILDING B
BROWNSVILLE, TX 78520
Phone: (956) 589-0567
Fax:
Signed:

PROPERTY OWNER INFORMATON

Name: ANIMAL REGULATION & CARE CENTER
Address: 416 FM511
BROWNSVILLE, TX 78575
Phone: (956) 544-7351
Fax:
Signed:

PROPERTY INFORMATION

Street Address: 416 FM511
Legal Description: Lot ____ Block ____ Subdivision ____
Construction Type: ☐ New Construction ☒ Addition

POWER REQUIREMENTS (Connecting Loads)

Voltage: ☐ 120/240 1-Phase ☐ 120/240 3-Phase ☐ 240/480 1-Phase ☐ 240/480 3-Phase ☐ 120/208 3-Phase ☒ 277/480 3-Phase ☐ 7200/12470 3-Phase
Current: ☐ 100 AMP ☐ 200 AMP ☐ 400 AMP ☒ 1,600 AMP *
* Services above 400 AMP will require current transformers (CT).

Load:	1-Phase	3-Phase
Lighting	6.0 KW	____ KW
Receptacles	36.0 KW	____ KW
HVAC	____ KW	309.6 KW
Motors/Machines	5.1 HP	34.3 HP
Others	____ KW	138.9 KW

Total Estimated KW Demand 490.5

TEMPORARY POWER NEEDED Month____ Day____ Year____
PERMANENT POWER NEEDED Month____ Day____ Year____

IMPORTANT TELEPHONE NUMBERS
BPUB Electrical Engineering..... (956) 983-6201
BPUB Customer Service..... (956) 983-6121

NOTES:
1. Aluminum meter sockets required (Effective 7/1/07)

IMPORTANT: If BPUB requests additional information or a response, the customer must comply within **20 business days**. Failure to respond or submit the requested information will result in the request being closed and requiring resubmittal.
Email to BPUB Electrical Engineering Department to nvasquez@brownsville-pub.com

BROWNSVILLE PUBLIC UTILITIES BOARD

CUSTOMER CHECKLIST

DEVELOPED BY:	ELECTRICAL ENGINEERING
APPROVED:	03/13/2026
DRAWING NUMBER	ENG-1

KEYED NOTES:

1. PROVIDE NEW ELECTRIC UTILITY PAD MOUNT TRANSFORMER CONCRETE PAD – SEE DETAIL.
2. PROVIDE NEW FEEDER.
3. PROVIDE NEW ELECTRIC UTILITY SERVICE METER 277/480V, 3ø, 4W.
4. SEE GROUNDING RISER DIAGRAM – TYPICAL.
5. PROVIDE NEW PANELBOARD. RECONNECT EXISTING BRANCH CIRCUITS AND CONNECT NEW BRANCH CIRCUITS.
6. PROVIDE 100KA, 277/480V, 3ø, 4W, SPD SQUARE "D" MODEL NO. HWA41.
7. EXISTING PANELBOARD TO REMAIN AS IS.
8. EXISTING LIGHTING CONTACTOR TO REMAIN AS IS.
9. EXISTING TIME CLOCK TO REMAIN AS IS.
10. PROVIDE NEW PANELBOARD.
11. EXISTING ELECTRIC UTILITY 3ø OVERHEAD SERVICE LINES.
12. EXISTING ELECTRIC UTILITY POWER POLE.
13. PROPOSED NEW ELECTRIC UTILITY 3ø OVERHEAD SERVICE LINES.
14. PROPOSED NEW ELECTRIC UTILITY POWER POLE WITH RISER DIP POLE.
15. PROVIDE (2) 4" NEW UNDERGROUND PRIMARY ELECTRIC CONDUITS WITH PULLWIRE. CONDUCTORS PROVIDED BY ELECTRICAL UTILITY COMPANY.
16. PROVIDE CONTINUOUS DETECTABLE UNDERGROUND WARNING TAPE.
17. PROVIDE 2" RACEWAY.
18. PROVIDE 4" HOUSEKEEPING CONCRETE PAD – TYPICAL.
19. PROVIDE SWITCHBOARD HOUSEKEEPING CONCRETE PAD. SEE STRUCTURAL DRAWINGS.
20. PROVIDE 4–4" RACEWAYS WITH PULLWIRE FOR FUTURE USE.
21. PROVIDE #6 BARE COPPER GROUNDING ELECTRODE CONDUCTOR AND 3/4" X 10 COPPER CLAD GROUND ROD.

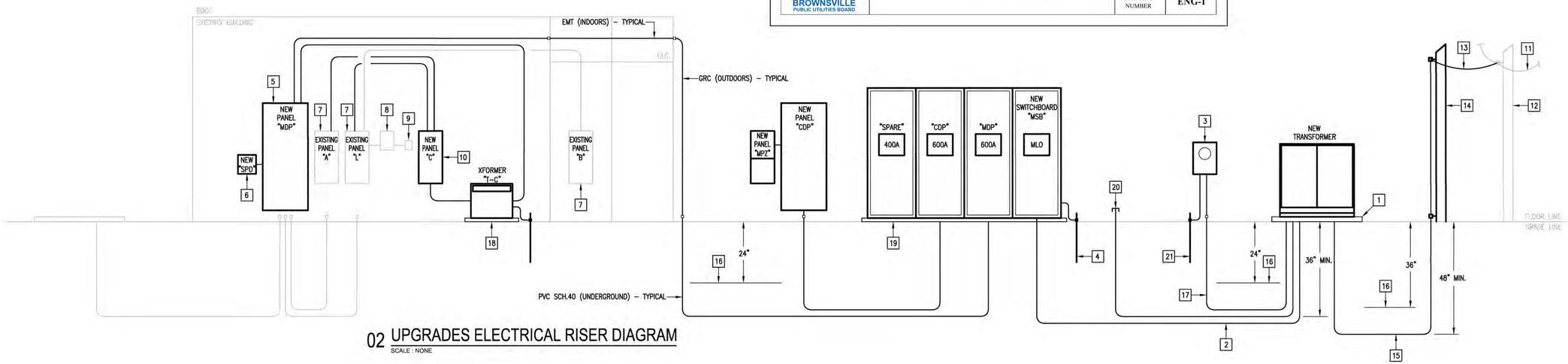

02 UPGRADES ELECTRICAL RISER DIAGRAM
SCALE : NONE

NO: REVISION: BY:

COPY NO:

STATE OF TEXAS
CESAR A. GONZALEZ
108611
LICENSED
PROFESSIONAL ENGINEER
03.23.2026

HVAC UPGRADES AT BROWNSVILLE ANIMAL REGULATION AND CARE FACILITY

OLMITO, TEXAS

F.M. 511

ethos engineering
1126 SOUTH COMMERCE ST.
HARLINGEN, TX
PHONE: 956.230.3435
TEXAS REGISTERED ENGINEERING FIRM
F-15998

DATE:	MARCH 23, 2026
CHECKED BY:	C.A.G.
DRAWN BY:	C.G.
PROJECT NO.:	24v67
CAD FILE:	-
SHEET:	E4.1

EQUIPMENT CONNECTION SCHEDULE:

DESIGN	HP/KW	FLA	MCA	MOCP	VOLTAGE	DISCONNECT	60/75° COPPER BRANCH CIRCUIT
CH-1	–	–	207	250	480V/3PHASE	400A, 3PNF, 600V, NEMA 4X SS	2.5" – 3#250KCMIL & #4G
CH-2	–	–	207	250	480V/3PHASE	400A, 3PNF, 600V, NEMA 4X SS	2.5" – 3#250KCMIL & #4G
SCHWP-1	7.5 HP	11	13.7	30	480V/3PHASE	1) VARIABLE FREQUENCY DRIVE	3/4" – 3#10 & #10G
SCHWP-2	7.5 HP	11	13.7	30	480V/3PHASE	1) VARIABLE FREQUENCY DRIVE	3/4" – 3#10 & #10G
DOAS-1 (MOTOR)	2 X 2.3 HP	2 X 2.8	6.3	15	480V/3PHASE	30A, 3PNF, 600V, NEMA 4X SS	3/4" – 3#12 & #12G
DOAS-1 (HEAT)	65 KW	78.1	–	100	480V/3PHASE	100A, 3PNF, 600V, NEMA 4X SS	1.25" – 3#1 & #8G
DOAS-2 (MOTOR)	2.3 HP	2.8	3.5	15	480V/3PHASE	30A, 3PNF, 600V, NEMA 4X SS	3/4" – 3#12 & #12G
DOAS-2 (HEAT)	25 KW	30	–	40	480V/3PHASE	60A, 3PNF, 600V, NEMA 4X SS	3/4" – 3#8 & #10G
DOAS-3 (MOTOR)	2.3 HP	2.8	3.5	15	480V/3PHASE	30A, 3PNF, 600V, NEMA 4X SS	3/4" – 3#12 & #12G
DOAS-3 (HEAT)	30 KW	36	–	50	480V/3PHASE	60A, 3PNF, 600V, NEMA 4X SS	3/4" – 3#6 & #10G
DOAS-4 (MOTOR)	2.3 HP	2.8	3.5	15	480V/3PHASE	30A, 3PNF, 600V, NEMA 4X SS	3/4" – 3#12 & #12G
DOAS-4 (HEAT)	25 KW	30	–	40	480V/3PHASE	60A, 3PNF, 600V, NEMA 4X SS	3/4" – 3#8 & #10G
DOAS-5 (MOTOR)	2.3 HP	2.8	3.5	15	480V/3PHASE	30A, 3PNF, 600V, NEMA 4X SS	3/4" – 3#12 & #12G
DOAS-5 (HEAT)	35 KW	42	–	60	480V/3PHASE	60A, 3PNF, 600V, NEMA 4X SS	1" – 3#4 & #10G
RTU-1 (MOTOR)	3.27 HP	3.9	4.9	15	480V/3PHASE	30A, 3PNF, 600V, NEMA 4X SS	3/4" – 3#12 & #12G
RTU-1 (HEAT)	30 KW	36	–	50	480V/3PHASE	60A, 3PNF, 600V, NEMA 4X SS	3/4" – 3#6 & #10G
RTU-2 (MOTOR)	2.3 HP	2.8	3.5	15	480V/3PHASE	30A, 3PNF, 600V, NEMA 4X SS	3/4" – 3#12 & #12G
RTU-2 (HEAT)	25 KW	30	–	40	480V/3PHASE	60A, 3PNF, 600V, NEMA 4X SS	3/4" – 3#8 & #10G

NOTES:
1) PROVIDED BY DIV. 23. INSTALLED AND CONNECTED BY DIV. 26.

EXHAUST FAN CONNECTION SCHEDULE:

DESIGN	HP	MCA	MOCP	VOLTAGE	DISCONNECT	CONNECTION	60° COPPER BRANCH CIRCUIT	POWER SOURCE (PANEL)
EF-1	1 HP	16.0	40	120V/1PHASE	INTEGRAL DISCONNECT	CONNECT AT ROOF. INTERLOCKING BY HVAC CONTROLS CONTRACTOR.	3/4" – 2#8 & #10G	C
EF-2	1 HP	16.0	40	120V/1PHASE	INTEGRAL DISCONNECT	CONNECT AT ROOF. INTERLOCKING BY HVAC CONTROLS CONTRACTOR.	3/4" – 2#8 & #10G	C
EF-3	5/8 HP	7.2	25	120V/1PHASE	INTEGRAL DISCONNECT	CONNECT AT ROOF. INTERLOCKING BY HVAC CONTROLS CONTRACTOR.	3/4" – 2#8 & #10G	C
EF-4	1/6 HP	4.4	20	120V/1PHASE	INTEGRAL DISCONNECT	CONNECT AT ROOF. INTERLOCK SWITCHING W/LIGHTING OCCUPANCY SENSOR. INTERLOCKING BY HVAC CONTROLS CONTRACTOR.	1) 1/2" – 2#12 & #12G	A
EF-5	1/6 HP	4.4	20	120V/1PHASE	INTEGRAL DISCONNECT	CONNECT AT ROOF. INTERLOCK SWITCHING W/LIGHTING OCCUPANCY SENSOR. INTERLOCKING BY HVAC CONTROLS CONTRACTOR.	1) 1/2" – 2#12 & #12G	A
EF-6	1/6 HP	4.4	20	120V/1PHASE	INTEGRAL DISCONNECT	CONNECT AT ROOF. INTERLOCK SWITCHING W/LIGHTING OCCUPANCY SENSOR. INTERLOCKING BY HVAC CONTROLS CONTRACTOR.	1) 1/2" – 2#12 & #12G	A
EF-7	1/2 HP	9.8	25	120V/1PHASE	INTEGRAL DISCONNECT	CONNECT AT ROOF. INTERLOCKING BY HVAC CONTROLS CONTRACTOR.	3/4" – 2#10 & #10G	C
EF-8	3/4 HP	13.8	35	120V/1PHASE	INTEGRAL DISCONNECT	CONNECT AT ROOF. INTERLOCKING BY HVAC CONTROLS CONTRACTOR.	3/4" – 2#8 & #10G	C
EF-9	3/4 HP	13.8	35	120V/1PHASE	INTEGRAL DISCONNECT	CONNECT AT ROOF. INTERLOCKING BY HVAC CONTROLS CONTRACTOR.	3/4" – 2#8 & #10G	C

NOTES:
1) RETAIN AND REUSE EXISTING. IF EXISTING BRANCH CIRCUIT DOES NOT REACH NEW POINT OF CONNECTION PROVIDE A J-BOX TO SPLICE AND EXTEND.

TRANSFORMER SCHEDULE:

DESIGN	KVA	PV	SV	DEGREE RISE	CONNECTION	FREQ HZ	SERVES PANELS	CAT. NO.	PRIMARY FEEDER (75°C COPPER)
T-C	112.5	480	120/208	115	DELTA Y	60	C	SQUARE "D": EXN112T3155H	2" – 3#3/0 & #6G

NOTES:
1) PROVIDE A WEATHER SHIELD.

MPZ

ROOM CENTRAL PLANT — VOLTS 240/120V 2P 3W — AIC 18,000
MOUNTING SURFACE — BUS AMPS 100 — MAIN BKR 40
FED FROM T-MPZ — NEUTRAL 100% — LUGS STANDARD
NOTE PROVIDE A TYPE WRITTEN AS BUILT DIRECTORY.

CKT #	CKT BKR	CIRCUIT DESCRIPTION	LOAD KVA A	LOAD KVA B	CKT #	CKT BKR	CIRCUIT DESCRIPTION	LOAD KVA A	LOAD KVA B
1	20/1	LIGHTING	0.395		2	20/1	SPARE	0	
3	20/1	RECEPT.		0.36	4	20/1	SPARE		0
5	20/1	DDC	0.03		6	20/1	SPARE	0	
7	20/1	SPARE		0	8	20/1	SPARE		0
							TOTAL CONNECTED KVA BY PHASE	0.425	0.36

	CONN KVA	CALC KVA			CONN KVA	CALC KVA	
LIGHTING	0.395	0.494	(125%)	RECEPTACLES	0.36	0.36	(50%>10)
				CONTINUOUS	0.03	0.038	(125%)
				TOTAL LOAD		0.891	
				BALANCED LOAD		3.71 A	

1. PROVIDE N3R ENCLOSURE.
2. PROVIDE PACKAGED POWER SUPPLY WITH INTEGRAL 7.5KVA TRANSFORMER, 30A/2P 480V PRIMARY MCB, AND 40A/2P 240V SECONDARY MCB.

MDP

ROOM OUTDOORS — VOLTS 480Y/277V 3P 4W — AIC 35,000
MOUNTING SURFACE — BUS AMPS 600 — MAIN BKR 600
FED FROM MSB — NEUTRAL 100% — LUGS STANDARD
NOTE PROVIDE A TYPE WRITTEN AS BUILT DIRECTORY THAT INCLUDES ROOM NUMBERS.

CKT #	CKT BKR	CIRCUIT DESCRIPTION	LOAD KVA A	LOAD KVA B	LOAD KVA C	CKT #	CKT BKR	CIRCUIT DESCRIPTION	LOAD KVA A	LOAD KVA B	LOAD KVA C
1	15/3	DOAS-1	1.08			2	100/3	DOAS-1 HEAT	21.7		
3	|			1.08		4	|			21.7	
5	|				1.08	6	|				21.7
7	15/3	DOAS-2	1.06			8	40/3	DOAS-2 HEAT	8.33		
9	|			1.06		10	|			8.33	
11	|				1.06	12	|				8.33
13	15/3	DOAS-3	1.06			14	50/3	DOAS-3 HEAT	10		
15	|			1.06		16	|			10	
17	|				1.06	18	|				10
19	15/3	DOAS-4	1.06			20	40/3	DOAS-4 HEAT	8.33		
21	|			1.06		22	|			8.33	
23	|				1.06	24	|				8.33
25	15/3	DOAS-5	1.06			26	60/3	DOAS-5 HEAT	11.7		
27	|			1.06		28	|			11.7	
29	|				1.06	30	|				11.7
31	15/3	RTU-1	1.06			32	50/3	RTU-1 HEAT	10		
33	|			1.06		34	|			10	
35	|				1.06	36	|				10
37	15/3	RTU-2	1.06			38	40/3	RTU-2 HEAT	8.33		
39	|			1.06		40	|			8.33	
41	|				1.06	42	|				8.33
43	200/3	*XFMR T-C	39.2			44	20/1	SPACE	0		
45	|			38.4		46	20/1	SPACE		0	
47	|				38.4	48	20/1	SPACE			0
49	20/1	SPACE	0			50	20/1	SPACE	0		
51	20/1	SPACE		0		52	20/1	SPACE		0	
53	20/1	SPACE			0	54	20/1	SPACE			0
								TOTAL CONNECTED KVA BY PHASE	125	124	124

	CONN KVA	CALC KVA			CONN KVA	CALC KVA	
LARGEST MOTOR	3.17	0.793	(25%)	CONTINUOUS	1.34	1.68	(125%)
MOTORS	32.5	32.5	(100%)	HEATING	235	235	(100%)
				DIVERSE	104	104	(100%)
				TOTAL LOAD		374	
				BALANCED 3-PHASE LOAD		450 A	

1. PROVIDE A NEMA 4X SS OUTDOOR ENCLOSURE.
*PROVIDE ELECTRONIC TYPE WITH L.S.I. DIALS.

CDP

ROOM CENTRAL PLANT — VOLTS 480Y/277V 3P 4W — AIC 35,000
MOUNTING SURFACE — BUS AMPS 600 — MAIN BKR 600
FED FROM MSB — NEUTRAL 100% — LUGS STANDARD
NOTE PROVIDE PHENOLIC CIRCUIT BREAKER IDENTIFICATION NAMETAGS PER SPECIFICATIONS.

CKT #	CKT BKR	CIRCUIT DESCRIPTION	LOAD KVA A	LOAD KVA B	LOAD KVA C	CKT #	CKT BKR	CIRCUIT DESCRIPTION	LOAD KVA A	LOAD KVA B	LOAD KVA C
1	30/3	(7.5HP) SCHWP-1	3.05			2	30/3	(7.5HP) SCHWP-2	3.05		
3	|			3.05		4	|			3.05	
5	|				3.05	6	|				3.05
7	20/3	SPACE	0			8	20/3	SPACE	0		
9	|			0		10	|			0	
11	|				0	12	|				0
13	250/3	CH-1	40			14	250/3	CH-2	40		
15	|			40		16	|			40	
17	|				40	18	|				40
19	20/3	SPACE	0			20	30/2	*PANEL MPZ	0.425		
21	|			0		22	|			0.36	
23	|				0	24	20/1	SPACE			0
								TOTAL CONNECTED KVA BY PHASE	86.5	86.5	86.1

	CONN KVA	CALC KVA			CONN KVA	CALC KVA	
LIGHTING	0.395	0.494	(125%)	RECEPTACLES	0.36	0.36	(50%>10)
LARGEST MOTOR	120	30	(25%)	CONTINUOUS	0.03	0.038	(125%)
MOTORS	18.3	18.3	(100%)	COOLING	240	240	(100%)
				TOTAL LOAD		289	
				BALANCED 3-PHASE LOAD		348 A	

1. PROVIDE A NEMA 4X SS OUTDOOR ENCLOSURE.
*PROVIDE ELECTRONIC TYPE WITH L.S.I. DIALS.

C

ROOM OUTDOORS — VOLTS 208Y/120V 3P 4W — AIC 10,000
MOUNTING SURFACE — BUS AMPS 400 — MAIN BKR 400
FED FROM T-C — NEUTRAL 100% — LUGS STANDARD
NOTE PROVIDE A TYPE WRITTEN AS BUILT DIRECTORY THAT INCLUDES ROOM NUMBERS.

CKT #	CKT BKR	CIRCUIT DESCRIPTION	LOAD KVA A	LOAD KVA B	LOAD KVA C	CKT #	CKT BKR	CIRCUIT DESCRIPTION	LOAD KVA A	LOAD KVA B	LOAD KVA C
1	40/1	EF-1	1.92			2	25/1	EF-7	1.18		
3	40/1	EF-2		1.92		4	35/1	EF-8		1.66	
5	25/1	EF-3			1.92	6	35/1	EF-9			1.66
7	50/3	EXISTING PRESSURE WASHER	4.8			8	20/1	DDC PANELS	1.34		
9	|			4.8		10	20/1	SPACE		0	
11	|				4.8	12	20/1	SPACE			0
13	225/3	EXISTING PANEL A	10			14	20/1	SPACE	0		
15	|			10		16	20/1	SPACE		0	
17	|				10	18	20/1	SPACE			0
19	150/3	EXISTING CONTAINER	10			20	150/3	EXISTING PANEL L	10		
21	|			10		22	|			10	
23	|				10	24	|				10
								TOTAL CONNECTED KVA BY PHASE	39.2	38.4	38.4

	CONN KVA	CALC KVA			CONN KVA	CALC KVA	
LARGEST MOTOR	1.92	0.48	(25%)	CONTINUOUS	1.34	1.68	(125%)
MOTORS	10.2	10.2	(100%)	DIVERSE	104	104	(100%)
				TOTAL LOAD		117	
				BALANCED 3-PHASE LOAD		324 A	

1. PROVIDE A NEMA 4X SS OUTDOOR ENCLOSURE.

NO: REVISION: BY:

COPY NO:

STATE OF TEXAS
CESAR A. GONZALEZ
108611
LICENSED PROFESSIONAL ENGINEER
03.23.2026

HVAC UPGRADES AT BROWNSVILLE ANIMAL REGULATION AND CARE FACILITY

OLMITO, TEXAS

F.M. 511

ethos engineering
1126 SOUTH COMMERCE ST.
HARLINGEN, TX
PHONE: 956-230-3435
TEXAS REGISTERED ENGINEERING FIRM F-15998

DATE: MARCH 23. 2026
CHECKED BY: C.A.G.
DRAWN BY: C.G.
PROJECT NO.: 24v67
CAD FILE: -
SHEET: E5.1

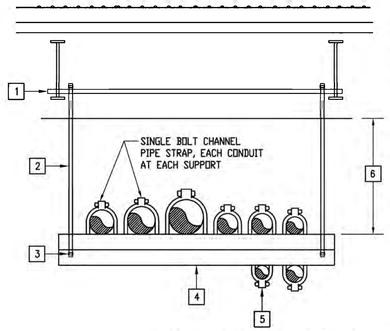

KEYED NOTES:

1. PROVIDE UNISTRUT STRUCTURAL CHANNEL SECURED TO TO JOIST AT BOTH ENDS.
2. PROVIDE 1/2" GALVANIZED ROD MINIMUM.
3. PROVIDE LOCKNUT.
4. PROVIDE GALVANIZED UNISTRUT 8'-0" O/C MAXIMUM.
5. 0'-1" MAXIMUM SIZE ON BOTTOM OF UNISTRUT. VARIES.

04 HORIZONTAL RACEWAYS SUPPORT DETAIL

SCALE : NOT TO SCALE

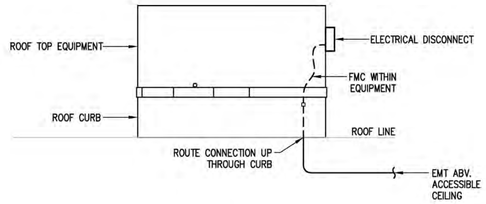

01 ROOF TOP UNIT CONNECTION DETAIL

SCALE : NOT TO SCALE

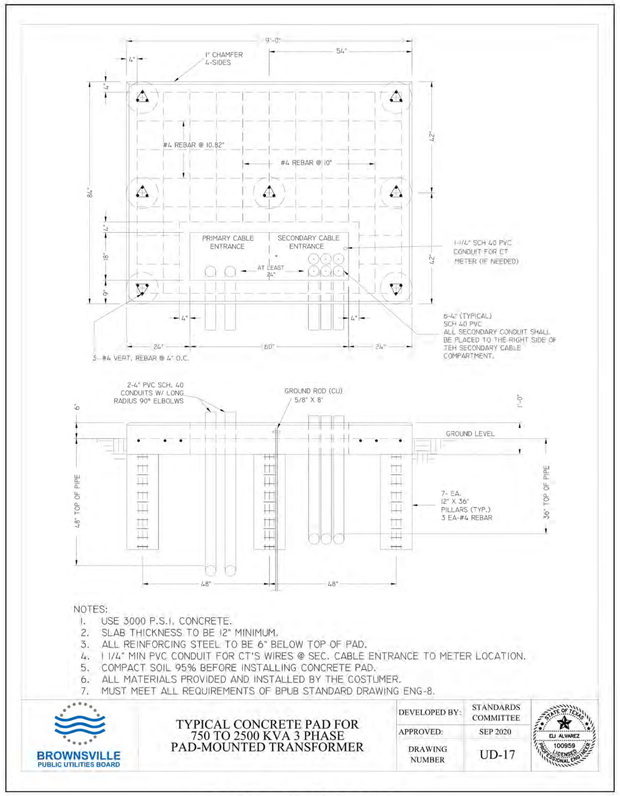

06 BPUB TRANSFORMER CONCRETE PAD DETAIL

SCALE : NOT TO SCALE

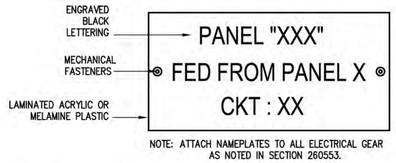

NOTE: ATTACH NAMEPLATES TO ALL ELECTRICAL GEAR AS NOTED IN SECTION 260553.

05 EQUIPMENT IDENTIFICATION LABEL DETAIL

SCALE : NOT TO SCALE

KEYED NOTES:

1. PROVIDE DISCONNECT SECURED TO HORIZONTAL UNISTRUT SUPPORTS.
2. PROVIDE SUPPORT BRACE.
3. PROVIDE UNISTRUT SUPPORT. PAINT CUT ENDS WITH COLD GALVANIZED COMPOUND.
4. PROVIDE UV STABLE POLYCARBONATE BASE. ANCHOR TO NEW CURBS.

GENERAL NOTE:
PROVIDE ALL HARDWARE AND SUPPORTS HOT-DIPPED GALVANIZED STEEL.

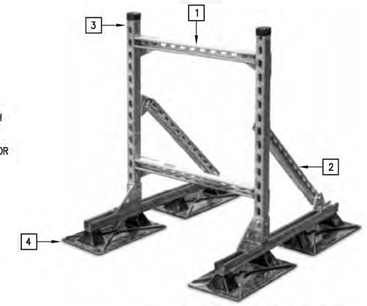

02 ROOF DISCONNECT SUPPORT DETAIL

SCALE : NOT TO SCALE

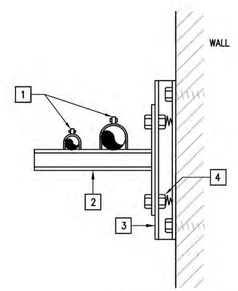

KEYED NOTES:

1. PROVIDE CONDUIT CLAMPS.
2. PROVIDE GALVANIZED UNISTRUT WALL BRACKET.
3. PROVIDE RAMSET OR BOLT GALVANIZED UNISTRUT TO WALL.
4. PROVIDE SELF HOLDING CLAMPING NUT WITH SPRING.

03 RACEWAY RUNS SUPPORT DETAIL

SCALE : NOT TO SCALE

NO: REVISION: BY:

COPY NO:

STATE OF TEXAS
CESAR A. GONZALEZ
108611
LICENSED
PROFESSIONAL ENGINEER
03.23.2026

HVAC UPGRADES AT BROWNSVILLE ANIMAL REGULATION AND CARE FACILITY

OLMITO, TEXAS

F.M. 511

ethos engineering
1126 SOUTH COMMERCE ST.
HARLINGEN, TX
PHONE: 956-230-3435
TEXAS REGISTERED ENGINEERING FIRM
F-15598

DATE: MARCH 23. 2026
CHECKED BY: C.A.G.
DRAWN BY: C.G.
PROJECT NO.: 24v67
CAD FILE: -
SHEET: E6.1

GENERAL STRUCTURAL NOTES

THESE GENERAL NOTES SHALL APPLY UNLESS OTHERWISE SPECIFICALLY NOTED ON PLANS OR DETAILS. THE CONTRACTOR SHALL VERIFY ALL DIMENSIONS AND SHALL COORDINATE ALL STRUCTURAL PLANS AND DETAILS WITH ARCHITECTURAL & MECHANICAL DRAWINGS BEFORE STARTING WORK. THE ENGINEER SHALL BE NOTIFIED OF ANY DISCREPANCIES PRIOR TO CONSTRUCTION. THE ENGINEER ASSUMES NO RESPONSIBILITY FOR CONTRACTOR MEANS AND METHODS OF CONSTRUCTION OR SITE SAFETY. DESIGN, CONSTRUCTION, WORKMANSHIP AND MATERIALS SHALL COMPLY WITH THE CONTROLLING PROVISIONS OF THE 2024 EDITION OF THE **INTERNATIONAL BUILDING CODE (IBC).**

DESIGN CRITERIA

1. BASIS FOR DESIGN AND CODE COMPLIANCE

   A. GOVERNING BUILDING CODE.....IBC 2024 EDITION

2. WIND DESIGN BASED ON:

   A. ASCE 7–22 REQUIREMENTS
   BASIC DESIGN WIND SPEED.....150 MPH (Vasc=116 MPH)
   RISK CATEGORY.....II
   WIND EXPOSURE CATEGORY.....C
   INTERNAL PRESSURE COEFFICIENT (GCpi).....±0.18
   Kzt.....1.0
   Kd.....0.85
   Ke.....1.0

3. GRAVITY DESIGN
   A. ROOF:
   DEAD LOAD.....SELF–WEIGHT OF STRUCTURE & ROOFING SYSTEM
   LIVE LOAD.....20 PSF (REDUCIBLE)

4. THE CONTRACTOR IS SOLELY RESPONSIBLE FOR ALL TDI WINDSTORM FIELD INSPECTIONS AND WINDSTORM CERTIFICATION OF ALL BUILDINGS. CONTRACTOR SHALL REFERENCE SPEC. 011100.

PROJECT WINDSTORM REQUIREMENTS

1. THE GENERAL CONTRACTOR MUST SUBMIT COMPONENT AND CLADDING WIND PRESSURE RATINGS AND REQUIRED ATTACHMENT PROCEDURES TO THE TEXAS DEPARTMENT OF INSURANCE (TDI) APPOINTED QUALIFIED INSPECTOR (WINDSTORM INSPECTOR) FOR REVIEW. SUBMITTAL INFORMATION SHALL INCLUDE DOCUMENTATION FOR EITHER A TESTED ASSEMBLY (THIRD PARTY WIND TEST REPORT) OR AN ENGINEERED ASSEMBLY (ENGINEERED SHOP DRAWINGS AND CALCULATIONS SEALED BY A TEXAS PROFESSIONAL ENGINEER) OF THE PROPOSED ASSEMBLY.

2. THE GENERAL CONTRACTOR SHALL CONTACT THE WINDSTORM INSPECTOR TO COORDINATE AND SCHEDULE REQUIRED PERIODIC INSPECTIONS OF THE INSTALLATION OF THE EXTERIOR COMPONENTS AND CLADDINGS.

3. THE GENERAL CONTRACTOR IS RESPONSIBLE FOR PROVIDING CONSTRUCTION SERVICES AS NEEDED TO SATISFY THE REQUIREMENTS OF THE CONSTRUCTION DRAWINGS AND SPECIFICATIONS, THE REFERENCED BUILDING CODE AND THE TEXAS DEPARTMENT OF INSURANCE WINDSTORM INSPECTION PROGRAM. ALL CONSTRUCTION ADMINISTRATION COSTS ASSOCIATED WITH SUBMITTAL PREPARATION, SUBMITTAL REVIEW, INSPECTION COORDINATION, INCLUDING ALL GENERAL CONDITIONS, OVERHEAD AND PROFIT, SHALL BE INCLUDED IN THE GENERAL CONTRACTOR'S BID.

4. FOR THE NEW EXTERIOR MECHANICAL EQUIPMENT AND EXPOSED EXTERIOR DUCTWORK, THE ENGINEERING DESIGN FOR THESE EXTERIOR ASSEMBLIES, INCLUDING THEIR SUPPORT COMPONENTS (CURBS, STANDS, SLEEPERS, ETC.) AND ANCHORING OF THESE ITEMS TO THE STRUCTURE, SHALL BE SPECIFIED AS A DELEGATED DESIGN TO BE PERFORMED BY THE EQUIPMENT AND DUCTWORK MANUFACTURER. HENCE, THIS RESPONSIBILITY FALLS ON THE GENERAL CONTRACTOR, THEIR SUBCONTRACTORS AND THEIR VENDORS. NEITHER THE STRUCTURAL ENGINEER OR WINDSTORM INSPECTOR IS RESPONSIBLE FOR DESIGNING THE ROOFTOP EQUIPMENT ASSEMBLIES OR DUCTWORK, NOR OF THE ANCHORING OF THESE ASSEMBLIES TO THE STRUCTURE. SUBMITTALS OF THE ENGINEERED ASSEMBLIES NEED TO BE PROVIDED BY THE GENERAL CONTRACTOR FOR REVIEW AND FOR USE IN PERFORMING THE FIELD INSPECTIONS.

FOUNDATION DESIGN CRITERIA

1. FOUNDATION DESIGN IS IN ACCORDANCE WITH THE INTERNATIONAL BUILDING CODE, AND IS BASED ON ASSUMED GEOTECHNICAL PROPERTIES.

   A. BEARING CAPACITY:
   GRADE BEAMS & CONTINUOUS FOOTINGS (TOTAL LOAD) .....1.6 KSF

   B. POTENTIAL VERTICAL RISE (PVR) .....1.0 INCH

2. GROUNDWATER IS ASSUMED TO BE ENCOUNTERED AT 8'–0" BELOW EXISTING GRADE (MAY FLUCTUATE WITH SEASON). CONTRACTOR SHALL DETERMINE ACTUAL GROUNDWATER LEVELS JUST PRIOR TO CONSTRUCTION EXCAVATION ACTIVITIES.

3. A GEOTECHNICAL ENGINEER OF RECORD SHALL BE RETAINED TO PERFORM TESTING AND INSPECTIONS DURING SITE PREPARATION AND PLACEMENT OF BUILDING PAD FILL AS REQUIRED BY SPECIFICATIONS AND GENERAL STRUCTURAL NOTES.

FOUNDATION NOTES

1. SITE EXCAVATION SHALL WORK AROUND AND PROTECT EXISTING STORM DRAINAGE INLET AND EXISTING STORM WATER PIPING. CONTRACTOR SHALL LOCATE DEPTH, LOCATION, AND PIPING LAYOUT OF ALL UNDERGROUND STORM WATER SYSTEM WITHIN PROJECT LIMIT PRIOR TO START OF EXCAVATION.

2. CONTRACTOR SHALL USE APPROPRIATE EXCAVATION AND COMPACTION EQUIPMENT TO PROTECT UNDERGROUND STORM WATER PIPING SYSTEM DURING CONSTRUCTION.

3. REMOVE **AT LEAST 36 INCHES.** OF THE EXISTING SITE SOIL, VEGETATION, TREE ROOTS, DEBRIS, ETC., FROM THE PROPOSED BUILDING AREA TO A DISTANCE OF 1'–0" OUTSIDE THE BUILDING AREA (EXTERIOR OF THE FOUNDATION, INCLUDING ATTACHED IMPROVEMENTS SUCH AS SIDE WALKS AND CANOPIES). DEPTH OF REMOVAL SHALL BE VERIFIED BY THE GEOTECHNICAL ENGINEER AT THE TIME OF CONSTRUCTION.

4. AFTER TOP SOIL HAS BEEN REMOVED, THE SUBGRADE SHALL BE PROOF–ROLLED WITH APPROPRIATE CONSTRUCTION EQUIPMENT UNTIL THE GRADE OFFERS A RELATIVELY UNYIELDING SURFACE. SOFT SOIL AND YIELDING AREAS, AND AREAS CONTAINING ORGANIC MATTER AND/OR DEBRIS, SHALL BE OVER EXCAVATED AND REPLACED WITH COMPACTED SELECT FILL IN ACCORDANCE WITH THE REQUIREMENTS BELOW.

5. PROOFROLLING OPERATIONS AND EXCAVATION/BACKFILL ACTIVITIES SHOULD BE PERFORMED DURING A PERIOD OF DRY WEATHER AND OBSERVED BY THE GEOTECHNICAL ENGINEER OR HIS REPRESENTATIVE TO DOCUMENT SUBGRADE CONDITIONS AND PREPARATION. IF SUBGRADE SOILS ARE ALLOWED TO BECOME WET OR SATURATED, REMOVAL AND REPLACEMENT OF SOFT SOILS OR CHEMICAL TREATMENT PROCEDURES SUCH AS LIME STABILIZATION SHALL BE PERFORMED AT THE CONTRACTOR'S EXPENSE. THE GEOTECHNICAL ENGINEER SHALL BE CONTACTED FOR ADDITIONAL RECOMMENDATIONS, IF REQUIRED.

6. SCARIFY, MOISTURE CONDITION, AND COMPACT THE TOP 12" OF THE EXPOSED SUBGRADE TO 98% OF STANDARD PROCTOR MAXIMUM DRY DENSITY AND THE MOISTURE CONTENT SHALL BE MAINTAINED AT OPTIMUM MOISTURE CONTENT TO +4% OF OPTIMUM MOISTURE CONTENT, IN ACCORDANCE WITH TEST METHOD ASTM D–698. MOISTURE CONTENT SHALL BE AS NOTED IMMEDIATELY PRIOR TO PLACING SELECT FILL.

7. RESTORE GRADE USING SELECT FILL, **MINIMUM OF 36 INCHES** OR AS REQUIRED TO PROVIDE THE SPECIFIED **FINISH GRADE ELEVATION.** WHICHEVER IS GREATER, AND PROPER SITE DRAINAGE, COMPACTED IN ACCORDANCE WITH THE REQUIREMENTS BELOW. FINISH FLOOR ELEVATIONS SHALL BE VERIFIED WITH ARCHITECT AND CIVIL ENGINEER.

8. SELECT FILL SHALL BE COMPACTED IN THE FIELD IN LIFTS NOT TO EXCEED 8" LOOSE MEASURE (6″ COMPACTED LIFT) TO A MINIMUM OF 98% OF STANDARD PROCTOR MAXIMUM DRY DENSITY AND AT, +/–2% OF OPTIMUM MOISTURE CONTENT, AS EVALUATED BY ASTM D–698

9. SELECT FILL SHALL BE FREE OF ORGANIC OR OTHER DELETERIOUS MATERIALS, HAVE A MINIMUM OF 35% PASSING THE #200 SIEVE AND NO SOIL PARTICLES EXCEEDING 1.1/2", AND HAVE A PLASTICITY INDEX (PI) BETWEEN 7–17. IF BLENDED OF MIXED SOILS ARE INTENDED FOR USE, THE GEOTECHNICAL ENGINEER SHOULD BE CONTRACTED TO PROVIDE ADDITIONAL RECOMMENDATIONS AND REQUIREMENTS

FOUNDATION NOTES CONTINUED:

10. FOUNDATION CONCRETE SHALL NOT BE PLACED ON SELECT FILL SOILS THAT HAVE BEEN DISTURBED BY RAINFALL OR WATER SEEPAGE. IF BEARING SOILS ARE SOFTENED BY WATER INTRUSION, OR BY DESICCATION, THE UNSUITABLE SOILS SHALL BE REMOVED FROM THE FOUNDATION EXCAVATION AND BE REPLACED WITH PROPERLY COMPACTED SELECT FILL PRIOR TO PLACEMENT OF FOUNDATION CONCRETE. ALL SOIL REMOVAL AND REPLACEMENT COSTS, INCLUDING ASSOCIATED COSTS TO REMOVE AND REINSTALL REINFORCEMENT AND VAPOR BARRIER MATERIALS, SHALL BE THE SOLE RESPONSIBILITY OF THE GENERAL CONTRACTOR. DEPTH OF SOIL REMOVAL AND RECOMPACTION REQUIREMENTS SHALL BE COORDINATED WITH THE GEOTECHNICAL ENGINEER.

11. SAMPLES OF PROPOSED SELECT FILL SHALL BE FURNISHED TO THE TESTING LABORATORY 7 DAYS PRIOR TO INSTALLATION TO PERMIT TIME FOR SPECIFICATION COMPLIANCE INSPECTION AND REVIEW BY THE GEOTECHNICAL ENGINEER.

12. LABORATORY MOISTURE–DENSITY CURVES SHALL BE DEVELOPED FOR SUBGRADE AND FILL. PROCTOR CURVES AND FIELD DENSITY TESTS SHALL BE SUBMITTED TO THE ENGINEER FOR REVIEW. A MINIMUM OF ONE (1) IN PLACE DENSITY TEST PER 1,000 SQUARE FEET OF SLAB AREA SHALL BE TAKEN ON EACH LIFT DURING PLACEMENT OF SELECT FILL. DENSITY REPORTS SHALL BE TRANSMITTED TO ENGINEER WITHIN 3 DAYS AFTER TESTS ARE MADE.

13. GRAIN SIZE ANALYSIS AND ATTERBERG LIMITS TESTS SHALL BE PERFORMED DURING FILL PLACEMENT AT A RATE OF ONE TEST PER 2,000 CUBIC YARDS OF FILL BROUGHT TO THE SITE. SAMPLES FOR TEST SHALL BE TAKEN FROM JOBSITE MATERIALS.

14. SITE SHALL BE GRADED SO THAT WATER DOES NOT POND WITHIN 10 FEET OF THE PERIMETER FOUNDATION BEAM DURING OR AFTER CONSTRUCTION. THE SLOPE OF THE GROUND SURFACE AWAY FROM THE STRUCTURE SHOULD BE A MINIMUM OF THREE (3%) PERCENT FOR A DISTANCE OF AT LEAST TEN (10') FEET. ELEVATION OF GROUND SURFACE ADJACENT TO THE FOUNDATION SHOULD BE AT LEAST 6 INCHES BELOW FINISH FLOOR.

15. FINAL DRAINAGE IS VERY IMPORTANT TO THE PERFORMANCE OF THE FOUNDATION. LANDSCAPING, PLUMBING, AND DOWNSPOUT DRAINAGE ARE ALSO VERY IMPORTANT. IT IS VITAL THAT ALL ROOF DRAINAGE BE TRANSPORTED AWAY FROM BUILDINGS SO THAT NO AREAS OF WATER POND AROUND BUILDINGS, WHICH CAN RESULT IN SOIL VOLUME CHANGE UNDER THE FOUNDATION. PLUMBING LEAKS SHOULD BE REPAIRED AS SOON AS POSSIBLE IN ORDER TO MINIMIZE THE MAGNITUDE OF MOISTURE CHANGE UNDER THE SLAB. LARGE TREES AND SHRUBS SHOULD NOT BE PLANTED IN THE IMMEDIATE VICINITY OF THE STRUCTURE, SINCE THE ROOT SYSTEMS CAN CAUSE A SUBSTANTIAL REDUCTION IN SOIL VOLUME IN THE VICINITY OF THE TREE DURING DRY PERIODS. BUSHES AND TREES SHOULD BE PLANTED A REASONABLE DISTANCE AWAY FROM THE STRUCTURE SO THAT THEIR CANOPY OR "DRIP LINE" DOES NOT EXTEND BEYOND THE PERIMETER OF THE FOUNDATION. WATERING OF VEGETATION SHOULD BE PERFORMED IN A TIMELY AND CONTROLLED MANNER. PROLONGED WATERING SHOULD BE AVOIDED.

HAZARDOUS MATERIALS ABATEMENT/ MANAGEMENT

1. THE ENGINEER HAS NO RESPONSIBILITY OR LIABILITY FOR DESIGN, REMOVAL OF, OR TESTING FOR ASBESTOS/LEAD, OR FOR ABATEMENT /MANAGERIAL TREATMENTS, MONITORING, AND LEGAL DISPOSAL OF MATERIALS. CONTRACTOR SHALL DETERMINE IF ANY HAZARDOUS MATERIAL ABATEMENT/ MANAGEMENT IS REQUIRED AND SHALL INCLUDE COSTS THEREOF IN THE BID.

CONSTRUCTION NOTES ON THE REPAIR WORKS ON EXISTING STRUCTURE

1. BEFORE PROCEEDING WITH ANY WORK WITHIN THE EXISTING FACILITY. THE CONTRACTOR SHALL FAMILIARIZE HIMSELF WITH EXISTING STRUCTURAL AND OTHER CONDITIONS. IT SHALL BE THE CONTRACTOR'S RESPONSIBILITY TO PROVIDE ALL NECESSARY BRACING. SHORING AND OTHER SAFEGUARDS TO MAINTAIN ALL PARTS OF THE EXISTING WORK IN A SAFE CONDITION DURING THE PROCESS OF DEMOLITION AND CONSTRUCTION AND TO PROTECT FROM DAMAGE THOSE PORTIONS OF THE EXISTING WORK WHICH ARE TO REMAIN.

2. THE CONTRACTOR SHALL FIELD VERIFY THE DIMENSIONS, ELEVATIONS, ETC. NECESSARY FOR THE PROPER CONSTRUCTION AND ALIGNMENT OF THE NEW PORTIONS OF THE WORK TO THE EXISTING WORK. THE CONTRACTOR SHALL MAKE ALL MEASUREMENTS NECESSARY FOR FABRICATION AND ERECTION OF STRUCTURAL MEMBERS. ANY DISCREPANCY SHALL BE IMMEDIATELY BROUGHT TO THE ATTENTION OF THE ENGINEER.

3. WELDING TO AND WITHIN AN EXISTING FACILITY PRESENTS POTENTIAL HAZARDS INCLUDING:

   A. FIRE HAZARD – DUE TO THE EXISTING CONSTRUCTION AND BUILDING CONTENTS.

   B. STRUCTURAL LIQUEFACTION – DUE TO WELDING ACROSS THE FULL SECTION OF STRUCTURAL STEEL MEMBERS.

   RECOMMENDATIONS TO PREVENT THESE HAZARDS INCLUDE.

   A. FIRE HAZARD – PROTECT EXISTING COMBUSTIBLES PRIOR TO WELDING. KEEP A SEPARATE WATCHMAN AND SEVERAL FIRE EXTINGUISHERS ON HAND.

   B. STRUCTURAL LIQUEFACTION – WELD IN SMALL INCREMENTS. ALLOW WELDS TO HARDEN BEFORE CONTINUING TO THE NEXT INCREMENT.

   C. DO NOT LEAVE THE SITE UNTIL SATISFIED THAT NO FIRE HAZARD EXISTS.

4. THE CONTRACTOR SHALL BE RESPONSIBLE FOR THE DESIGN AND ERECTION OF ALL SHORING NECESSARY TO SAFEGUARD THE EXISTING STRUCTURE.

EXISTING CONDITIONS

1. CONTRACTOR SHALL FIELD VERIFY ALL EXISTING DIMENSIONS AND CONDITIONS. DIMENSIONS SHOWN ON THE PLANS ARE APPROXIMATE. CONTRACTOR SHALL OBTAIN ALL FIELD MEASUREMENTS AS NECESSARY TO COORDINATE NEW CONSTRUCTION TO EXISTING CONDITIONS.

2. IF EXISTING CONDITIONS DIFFER FROM THE DRAWINGS, INFORM THE ENGINEER AND ADDITIONAL DETAILS OR INTERPRETATION WILL BE PROVIDED. DO NOT PROCEED WITHOUT VERIFICATION.

3. THE CONTRACTOR SHALL VISIT THE SITE OF THE PROPOSED WORK AND FULLY ACQUAINT THEMSELVES WITH THE EXISTING CONDITIONS.

DEMOLITION NOTES

1. GENERAL CONTRACTOR SHALL BE RESPONSIBLE FOR THE PROTECTION OF THE EXISTING STRUCTURE AND SURROUNDING BUILDINGS DURING CONSTRUCTION.

2. GENERAL CONTRACTOR SHALL BE RESPONSIBLE FOR TEMPORARY WATERTIGHTNESS OF THE BUILDING DURING DEMOLITION AND RECONSTRUCTION.

3. GENERAL CONTRACTOR SHALL COORDINATE WITH ENGINEER ITEMS THAT ARE UNCLEAR PRIOR TO ANY DEMOLITION.

4. GENERAL CONTRACTOR SHALL BE RESPONSIBLE FOR VISITING THE PROJECT SITE TO DETERMINE DEMOLITION REQUIREMENTS AT THIS PROJECT. CONTRACTOR SHALL INCLUDE IN THEIR BID ALL THE DEMOLITION REQUIREMENTS TO COMPLETE THIS PROJECT.

5. GENERAL CONTRACTOR SHALL LOCATE AND LABEL ALL UTILITIES BEFORE COMMENCEMENT OF DEMOLITION & CONSTRUCTION ACTIVITIES. UTILITIES SHALL BE CLEARLY MARKED SO THAT ANY SUBCONTRACTOR VISITING THIS SITE CAN EASILY IDENTIFY UTILITIES. ANY COSTS TO REPAIR DAMAGES IF UTILITIES ARE NOT PROPERLY IDENTIFIED, ARE THE SOLE RESPONSIBILITY OF THE CONTRACTOR.

6. GENERAL CONTRACTOR SHALL BE RESPONSIBLE FOR REMOVING AND DISPOSING DEBRIS & MATERIAL AWAY FROM SITE ACCORDING TO GOVERNING LOCAL, STATE OR FEDERAL REGULATIONS.

7. ANY AREA DAMAGED DURING CONSTRUCTION SHALL BE REPAIRED TO THE OWNER'S SATISFACTION AT THE CONTRACTOR'S EXPENSE.

PENETRATIONS

1. PENETRATIONS THROUGH EXISTING ELEMENTS SHALL COMPLY WITH THE DRAWINGS AND SPECIFICATIONS.

2. DO NOT CUT JOISTS, BEAMS OR COLUMNS WITHOUT PRIOR APPROVAL.

3. PENETRATIONS THROUGH LOAD–BEARING ELEMENTS SHALL BE TEMPORARILY SHORED TO PREVENT COLLAPSE, AS SPECIFIED BELOW.

TEMPORARY BRACING, FALSEWORK AND FORMWORK

1. CONTRACTOR SHALL PROVIDE ENGINEERED SHORING PLAN PRIOR TO START OF ROOF COLUMN DEMOLITION. SHORING PLAN SHALL BE SIGNED AND SEALED BY A STATE OF TEXAS PROFESSIONAL ENGINEER.

2. THE DESIGN, ENGINEERING, FABRICATION, CONSTRUCTION, ERECTION, REMOVAL AND OVERALL SAFETY OF ALL TEMPORARY SUPPORTS SUCH AS FALSEWORK, FORMWORK, SHORES AND BRACING REQUIRED FOR THE EXECUTION OF THE CONTRACT ARE NOT INCLUDED IN THE DRAWINGS AND SHALL BE THE RESPONSIBILITY OF THE CONTRACTOR.

3. THE ENGINEER'S EFFORTS ARE AIMED AT DESIGNING A PROJECT WHICH WILL BE SAFE AFTER FULL COMPLETION. THE ENGINEER HAS NO EXPERIENCE IN, AND TAKES NO RESPONSIBILITY FOR, CONSTRUCTION MEANS AND METHODS OR JOB SITE SAFETY DURING CONSTRUCTION. SAFETY IS EXCLUSIVELY THE CONTRACTOR'S RESPONSIBILITY. PROCESSING AND/OR APPROVING SUBMITTALS MADE BY CONTRACTOR WHICH MAY CONTAIN INFORMATION RELATED TO SHORING, CONSTRUCTION METHODS OR SAFETY ISSUES, OR PARTICIPATION IN MEETINGS WHERE SUCH ISSUES MIGHT BE DISCUSSED, MUST NOT BE CONSTRUED AS VOLUNTARY ASSUMPTION BY ENGINEER OF ANY RESPONSIBILITY FOR THESE SAFETY PROCEDURES.

SAFETY

1. PERFORM ALL WORK IN A SAFE AND CONSCIENTIOUS MANNER TO PREVENT INJURIES.

2. CONTRACTOR SHALL MAINTAIN OSHA STANDARDS FOR JOB SAFETY AND WORKER PROTECTION, INCLUDING, BUT NOT LIMITED TO ADEQUATE PROTECTION, BARRICADES, SIGNS, ETC.

3. THE GENERAL CONTRACTOR IS SOLELY RESPONSIBLE FOR SAFETY. THE ENGINEER EXPRESSLY EXCLUDES ANY RESPONSIBILITY FOR CONTRACTOR SAFETY OR SAFETY OF JOBSITE.

CONCRETE

1. ALL CONCRETE WORK SHALL CONFORM TO THE AMERICAN CONCRETE INSTITUTE SPECIFICATION, A.C.I. #301 AND BUILDING CODE REQUIREMENTS, A.C.I. #318, LATEST EDITION.

2. ALL DETAILING, FABRICATION AND ERECTION OF REINFORCING BARS, UNLESS OTHERWISE NOTED, MUST FOLLOW THE A.C.I. "MANUAL OF STANDARD PRACTICE FOR DETAILING REINFORCED CONCRETE", A.C.I. #315, LATEST EDITION.

3. CONCRETE SHALL HAVE A MINIMUM COMPRESSION STRENGTH OF 3,000 PSI AT 28 DAYS.

4. A MAXIMUM OF 25% FLYASH MAY BE USED AS A CEMENT SUBSTITUTE AND SHALL CONFORM TO ASTM C618, CLASS C. THE WATER/CEMENT RATIO SHALL NOT EXCEED 0.6 AND SLUMPS SHALL BE 5 INCHES (±1 INCH). AGGREGATE SHALL BE WELL–GRADED, 1" MAXIMUM FOR THE SLAB ON GRADE, 1" MAXIMUM FOR CAST–IN–PLACE BEAMS AND ABOVE GRADE SLABS. COARSE AGGREGATE SHALL MEET ASTM C33, GRADATION #57. A QUALIFIED TESTING LABORATORY SHALL BE RETAINED TO FURNISH MIX DESIGNS FOR ALL CLASSES OF CONCRETE. A SAMPLE OF FOUR CYLINDERS SHALL BE TAKEN NOT LESS THAN ONCE A DAY, NOR LESS THAN ONCE FOR EACH 100 YD3 OF CONCRETE. ONE CYLINDER SHALL BE TESTED AT 7 DAYS AND TWO AT 28 DAYS. THE FOURTH CYLINDER MAY BE DISPOSED OF AFTER 45 DAYS IF NOT USED.

5. ADMIXTURES CONTAINING WATER SOLUBLE CHLORIDE IONS GREATER THAN 0.06% BY WEIGHT OF CEMENT SHALL NOT BE USED.

6. REINFORCING BARS SHALL BE NEW BILLET STEEL CONFORMING TO ASTM A–615, GRADE 60. #3 BARS MAY BE GRADE 40.

7. STANDARD PROTECTIVE COVER OF REINFORCING BARS UNLESS OTHERWISE NOTED SHALL BE:

   WHERE CAST AGAINST DIRT OR FILL ..... 3 IN.
   EXPOSED TO EARTH OR WEATHER ..... 2 IN.
   SLABS AND WALLS ..... 1 IN.
   OTHER ..... 1–1/2 IN.

8. ALL ACCESSORIES SHALL BE IN ACCORDANCE WITH THE A.C.I. "MANUAL OF STANDARD PRACTICE FOR DETAILING REINFORCED CONCRETE", A.C.I. #315, LATEST EDITION.

9. SLAB MAT TO BE SUPPORTED BY MASONRY BRICK BATTS (MIN OF 1/2 BRICK) SPACED AT 4 FEET ON CENTER EACH WAY (MAX). BEAM CAGES SUPPORTED BY BATTS AT 4 FEET ON CENTER.

10. VERTICAL CONSTRUCTION JOINTS IN FLOOR SHALL BE COORDINATED WITH STRUCTURAL ENGINEER PRIOR TO FORMING SLAB. CRACK CONTROL JOINTS SHALL BE PROVIDED AT LOCATIONS SHOWN ON THE PLANS. CONTROL JOINTS SHALL BE SAWCUT (IMMEDIATELY SUBSEQUENT TO FINISHING SLAB) WITH "SOFF–CUT" SYSTEM. JOINTS SHALL BE CLEANED AND FILLED WITH "SONOLASTIC SL1" WITHIN TWO (2) DAYS AFTER SAWCUTTING. NO HORIZONTAL JOINTS WILL BE PERMITTED IN SLABS OR BEAMS UNLESS APPROVED BY THE ENGINEER.

11. PROVIDE 2 TOP & BOTTOM CORNER BARS AT ALL DISCONTINUOUS GRADE BEAMS AND FOUNDATION CORNERS. CORNER BARS SHALL BE 4'–0" IN LENGTH (2'–0" LEGS). SIZE OF THE CORNER BARS SHALL MATCH THE SIZE OF THE GRADE BEAM REINFORCING AS SHOWN BY STRUCTURAL DRAWINGS.

12. MAINTAIN A MINIMUM OF ONE AND ONE–HALF (1–1/2) TIMES THE MAXIMUM COARSE AGGREGATE SIZE BETWEEN ALL REINFORCING BARS (EXCEPT AT LAPS).

13. BARS SCHEDULED OR DETAILED "CONT" SHALL BE LAPPED 40 BAR DIAMETERS (24 INCHES MINIMUM) UNLESS OTHERWISE NOTED.

14. WHERE CONCRETE IS TO HAVE UNEXPOSED SURFACES, THE FORMS MAY BE CONSTRUCTED OF #2 LUMBER OR BETTER. WHERE SURFACES ARE EXPOSED, SUCH AS FOR FINISH PAINTING OR STUCCO DASH, THE FORMS SHALL BE COMMERCIAL STANDARD DOUGLAS FIR, MOISTURE–RESISTANT CONCRETE FORM PLYWOOD; MINIMUM 5–PLY AND AT LEAST 9/16" THICK, OR FORMS LINED WITH COMMERCIAL STANDARD DOUGLAS FIR, CONCRETE FORM EXTERIOR, 3–PLY, NOT LESS THAN 1/4" THICK. WHERE CONCRETE IS EXPOSED, A SMOOTH SURFACE IS REQUIRED, FREE FROM FINS, HONEYCOMB, FORM MARKS OR OTHER DEFECTS.

15. EXPOSED SURFACES OF CONCRETE AT THE PERIMETER OF THE FOUNDATION SHALL BE FORMED WITH 2X10 #2 LUMBER OR BETTER. A SMOOTH SURFACE IS REQUIRED, FREE FROM FINS, HONEYCOMB, FORM MARKS OR OTHER DEFECTS.

16. CONSTRUCT FORMS SO THAT JOINTS ARE LEAKPROOF. MAINTAIN FORMS SUFFICIENTLY RIGID TO PREVENT DEFORMATION UNDER LOAD.

17. CONCRETE MAY BE PLACED WITH CHUTES UP TO 25' MAXIMUM. SLUMP SHALL NOT EXCEED 6" AT TRUCK DISCHARGE POINT.

18. CONCRETE PLACED BY PUMPING SHALL MEET THE FOLLOWING REQUIREMENTS:

   A. COARSE AGGREGATE SHALL BE GRADED FROM A MAXIMUM OF 1" DOWN

   B. MAXIMUM ALLOWABLE INCREASE IN CEMENT FACTOR SHALL BE 1/2 SACK PER CUBIC YARD OVER NORMAL MIX DESIGN.

   C. MAXIMUM WATER CEMENT RATIO SHALL BE 7–1/2 GALLONS PER SACK OF CEMENT. IF MORE WORKABILITY IS REQUIRED, AN ADMIXTURE MAY BE USED.

   D. MAXIMUM WEIGHT RATIO OF FINE AGGREGATES TO COARSE AGGREGATES SHALL NOT EXCEED 2/3.

   E. REFER TO A.C.I. #301, LATEST EDITION, SECTION 800, FOR OTHER PUMPING REQUIREMENTS.

   F. IN NO CASE SHALL CONCRETE BE PUMPED THROUGH AN ALUMINUM TUBE.

   G. SLUMP SHALL NOT EXCEED 6" AT TRUCK DISCHARGE POINT.

19. FLOOR FINISH (TOLERANCES)

   A. STEEL TROWEL FINISH 1/8" IN 10'

   B. FLOAT FINISH 1/4" IN 10'

   C. SCRATCH FINISH 1/2" IN 10'

20. CONCRETE TO BE CURED IN ACCORDANCE WITH ACI RECOMMENDATIONS. PROPOSED METHOD OF CURING TO BE COORDINATED WITH ENGINEER PRIOR TO CONCRETE PLACEMENT.

21. SHOP DRAWINGS SHALL BE PREPARED FOR ALL REINFORCING STEEL AND SUBMITTED FOR REVIEW BY ENGINEER. SUBMITTALS SHALL INCLUDE ELECTRONIC (PDF) COPIES OF EACH DRAWING. ENGINEERING DRAWINGS SHALL NOT BE REPRODUCED AND USED AS SHOP DRAWINGS.

CONCRETE CONTINUED:

22. THE CONTRACTOR SHALL REVIEW AND ANNOTATE SHOP DRAWINGS BEFORE SUBMITTING THEM TO THE ARCHITECT/ENGINEER FOR REVIEW. THE CONTRACTOR SHALL ALLOW ARCHITECT/ENGINEER 10 WORKING DAYS FOR REVIEW OF SHOP DRAWINGS.

23. ENGINEER TO BE NOTIFIED 48 HOURS PRIOR TO PLACEMENT OF FOUNDATION AND OF STRUCTURAL CONCRETE TO SCHEDULE REQUIRED OBSERVATIONS.

CONCRETE MASONRY

1. THE **GENERAL CONTRACTOR, PROJECT SUPERINTENDENT AND THE MASONRY FOREMAN** SHALL MEET WITH THE STRUCTURAL ENGINEER PRIOR TO THE START OF MASONRY WORK TO REVIEW PROJECT REQUIREMENTS AND PROCEDURES.

2. AN INDEPENDENT TESTING LAB SHALL VERIFY PLACEMENT OF VERTICAL REINFORCING IN WALLS AND HORIZONTAL REINFORCING IN BOND BEAMS AND LINTELS PRIOR TO PLACEMENT OF GROUT. INDEPENDENT TESTING LAB SHALL PROVIDE CONTINUOUS VISUAL OBSERVATIONS OF GROUTING PROCEDURES, REBAR PLACEMENT, SITE MIXING OF MORTAR, INSTALLATION OF EMBEDDED STEEL CONNECTORS, AND GENERAL PLACEMENT OF MASONRY UNITS AND MORTAR JOINTS. INSPECTION REPORTS ARE TO BE GENERATED DAILY BY THE TESTING LAB. INSPECTION SUMMARY REPORTS SHALL BE EMAILED TO THE STRUCTURAL ENGINEER IN ELECTRONIC (PDF) FORMAT.

3. ALL CONCRETE MASONRY SHALL BE IN ACCORDANCE WITH THE REQUIREMENTS OF THE LOCAL BUILDING CODES AND THE MASONRY SOCIETY (TMS 402). DESIGN IS BASED ON MASONRY COMPRESSIVE STRENGTH (f'm) OF 2,000 PSI.

4. HOT AND COLD WEATHER CONSTRUCTION PROCEDURES SHALL BE UTILIZED AS REQUIRED BY THE SPECIFICATIONS AND TMS 602.

5. HOLLOW CONCRETE MASONRY UNITS SHALL BE DOMESTIC LIGHTWEIGHT MOISTURE CONTROLLED TYPE I UNITS, CONFORMING TO ASTM C–90.

6. MASONRY UNITS SHALL HAVE A MINIMUM AVERAGE COMPRESSIVE STRENGTH OF 2,000 PSI (NET AREA) WHEN TESTED IN ACCORDANCE WITH ASTM C–140, "METHODS OF SAMPLING AND TESTING CONCRETE MASONRY UNITS".

7. MORTAR PROPORTIONS FOR REINFORCED MASONRY SHALL BE ESTABLISHED PER ASTM C270 PROPORTION SPECIFICATIONS, TYPE S USING MASONRY CEMENT.

8. GROUT FOR ALL REINFORCED HOLLOW MASONRY UNIT WALLS SHALL HAVE A MINIMUM COMPRESSIVE STRENGTH OF 3000 PSI WITH A MAXIMUM 3/8" AGGREGATE. A MID RANGE WATER REDUCING AGENT SUCH AS "POLYHEED"(MASTER BUILDERS) SHALL BE USED. SLUMP TO BE BETWEEN 8 AND 11 INCHES. **ALL GROUT SHALL BE PUMPED.** PLACING OF GROUT TO FOLLOW AMERICAN CONCRETE INSTITUTE (ACI) RECOMMENDATIONS REGARDING **LOW & HIGH LIFT GROUTING.** MAXIMUM LIFT OF GROUT SHALL NOT EXCEED 5'–0" UNLESS APPROVED BY THE ENGINEER PRIOR TO START OF GROUTING. GROUT TO BE TESTED BY A QUALIFIED TESTING LABORATORY AT A RATE OF ONE TEST PER 25 CY OF GROUT IN ACCORDANCE WITH ASTM C1019.

9. REINFORCING STEEL SHALL CONFORM TO ASTM A–615, GRADE 60. ALL BAR REINFORCING SHALL BE LAPPED 48 BAR DIAMETERS (MIN). BARS SHALL BE PLACED WITHIN 1/2" OF LOCATION SHOWN IN STRUCTURAL PLANS. BARS SHALL BE HELD IN POSITION DURING GROUTING WITH BAR POSITIONERS. POSITIONERS SHALL BE LOCATED AT THE BOTTOM AND TOP OF THE WALL AND AT 8 TO 10 FOOT INTERVALS. BARS SPLICED BY NON–CONTACT LAP SPLICES SHALL NOT BE SPACED TRANSVERSELY FARTHER APART THAN ONE–FIFTH THE REQUIRED LENGTH OF LAP NOR MORE THAN 8 INCHES.

10. VERTICAL BARS SHALL EXTEND TO THE TOP OF THE PARAPET WALL OR BOND BEAM WHEN A 16" DEEP BEAM IS SPECIFIED. HOOKED DOWELS SHALL BE PROVIDED AT ROOF BOND BEAMS (W/O PARAPETS) LESS THAN 16" DEEP. DOWELS SHALL BE 30" LONG WITH 12" HOOKS.

11. ALL EXTERIOR MASONRY WALLS SHALL BE REINFORCED WITH 9 GA. HOT DIPPED GALVANIZED HORIZON

GENERAL STRUCTURAL NOTES

STRUCTURAL STEEL CONTINUED:

8. ALL SHOP AND FIELD WELDS SHALL BE MADE BY WELDERS WHO HAVE BEEN QUALIFIED AND CERTIFIED TO MAKE THE REQUIRED WELDS IN ACCORDANCE WITH THE LATEST AMERICAN WELDING SOCIETY SPECIFICATIONS (A.W.S. D–1.1).
9. WELDS SHALL BE MADE WITH COVERED MILD STEEL ELECTRODES COMPLYING WITH AWS D1 72 CODE AND SERIES E 70XX.
10. ERECTION CONNECTORS SHALL BE PROVIDED IN ORDER TO PROPERLY ALIGN AND BE TRUE AND PLUMB WHEN WELDS ARE MADE.
11. ALL COMPLETE PENETRATION WELDS, BOTH SHOP AND FIELD, SHALL BE TESTED BY A QUALIFIED TESTING LABORATORY UTILIZING ULTRA SONIC TESTING PROCEDURES IN ACCORDANCE WITH A.W.S. D–1.1. ANY WELDS FOUND DEFECTIVE SHALL BE REMOVED AND REPLACED AT NO ADDITIONAL COST TO THE OWNER. ALL X–RAYED WELDS SHALL BE GROUND SMOOTH.
12. THE FABRICATOR SHALL SUPPLY BACK–UP PLATES AND EXTENSION TABS FOR ALL COMPLETE PENETRATION WELDS.
13. ALL STEEL MEMBERS, UNLESS NOTED OTHERWISE, SHALL BE HOT DIPPED GALVANIZED. DO NOT PRIME ITEMS TO BE EMBEDDED IN CONCRETE OR FIRE PROOFED W/ SPRAY ON MATERIAL WITHOUT COORDINATION W/ MECHANICAL ENGINEER.
14. WELDED HEADED STUDS (WHS) SHALL BE "NELSON ANCHORS", OR EQUAL, Fs = 60 KSI, DIAMETER AND LENGTH AS SHOWN ON PLANS. STUDS TO BE WELDED& SHOP TESTED IN ACCORDANCE W/ THE MANUFACTURER'S RECOMMENDATIONS.
15. AFTER ERECTION, PRIME WELDS, ABRASIONS AND SURFACES NOT PRIMED. USE PRIMER CONSISTENT WITH SHOP COAT. GALVANIZED SURFACES (HOT DIPPED OR COLD) SHALL BE CLEANED AND PAINTED WITH "ZRC".
16. FIELD WELDS AND BOLTED CONNECTIONS SHALL BE VISUALLY INSPECTED BY A QUALIFIED INDEPENDENT INSPECTOR. THE INSPECTOR SHALL PROVIDE A WRITTEN REPORT TO THE STRUCTURAL ENGINEER.
17. A SINGLE ELECTRONIC FILE (PDF FORMAT) SHOP DRAWINGS SHALL BE PREPARED FOR ALL STRUCTURAL STEEL COMPONENTS AND SUBMITTED FOR REVIEW BY ENGINEER. ENGINEERING DRAWINGS SHALL NOT BE REPRODUCED AND USED AS SHOP DRAWINGS.
18. THE CONTRACTOR SHALL REVIEW AND ANNOTATE SHOP DRAWINGS BEFORE SUBMITTING THEM TO THE ARCHITECT/ENGINEER FOR REVIEW. THE CONTRACTOR SHALL ALLOW ARCHITECT/ENGINEER 10 WORKING DAYS FOR REVIEW OF SHOP DRAWINGS.
19. THE STRUCTURAL ENGINEER SHALL BE NOTIFIED FOR A FRAMING OBSERVATION IMMEDIATELY AFTER ROOF PANELS ARE INSTALLED AND BEFORE INSTALLATION OF THE CEILING.

FASTENERS

1. CAST–IN–PLACE AND POST–INSTALLED ANCHORS SHALL BE PER ANCHOR DIAMETER AND EMBEDMENT DEPTH NOTED ON THE DRAWINGS. POST–INSTALLED ANCHORS SHALL BE UTILIZED ONLY WHERE SPECIFIED. ALL ANCHORS SHALL BE HOT–DIPPED GALVANIZED PER ASTM A153.
2. ALL ANCHORS NOTED BELOW SHALL BE INSTALLED IN ACCORDANCE WITH THE MANUFACTURER'S RECOMMENDATIONS. CONTRACTOR SHALL CONTACT MANUFACTURER'S REPRESENTATIVE FOR THE INITIAL TRAINING AND INSTALLATION OF ANCHORS, AND FOR PRODUCT RELATED QUESTIONS AND AVAILABILITY.
3. SPECIAL INSPECTIONS SHALL BE PROVIDED FOR ALL MECHANICAL AND ADHESIVE ANCHORS PER THE APPLICABLE EVALUATION REPORT NOTED BELOW. SPECIAL INSPECTIONS SHALL BE PERFORMED BY INDEPENDENT TESTING LABORATORY PERFORMING QA/QC SERVICES ON PROJECT.
4. EXPANSION BOLTS (EB) IN CONCRETE/CMU SHALL BE TESTED AND QUALIFIED FOR USE IN ACCORDANCE WITH ACI 355.2 AND ICC–ES AC193. ACCEPTABLE PRODUCTS:
   A. KWIK BOLT III (ICC–ES ESR–2302) BY HILTI (CONCRETE)
   B. KWIK BOLT III (ICC–ES–ESR–1385) BY HILTI (MASONRY)
   C. STRONG–BOLT 2 (ICC–ES ESR–3037) BY SIMPSON STRONG–TIE (CONCRETE)
   D. WEDGE–ALL ANCHOR (ICC–ES ESR–1396) BY SIMPSON STRONG–TIE (MASONRY)
5. HEAVY DUTY SLEEVE ANCHORS IN CONCRETE/CMU SHALL BE TESTED AND QUALIFIED OR USE IN ACCORDANCE WITH ACI 355.2 AND ICC–ES AC193. EXPANSION BOLTS (EB) SHALL NOT BE SUBSTITUTED FOR SLEEVE ANCHORS WITHOUT PRIOR WRITTEN APPROVAL BY STRUCTURAL ENGINEER. ACCEPTABLE PRODUCTS:
   A. HSL–3 (ICC–ES ESR–1545) BY HILTI (CONCRETE)
6. SCREW ANCHORS IN CONCRETE SHALL BE TESTED AND QUALIFIED FOR USE IN ACCORDANCE WITH ACI 355.2 AND ICC–ES AC193. ACCEPTABLE PRODUCTS:
   A. KWIK HUS–EZ (ICC–ES ESR–3027) BY HILTI (CONCRETE)
   B. KWIK HUS–EZ (ICC–ES ESR–3056) BY HILTI (MASONRY)
   C. TITEN HD (ICC–ES ESR–2713) BY SIMPSON STRONG–TIE (CONCRETE)
   D. TAPCON ANCHORS (ICC–ES ESR–1671) (MASONRY)
   E. POWERS WEDGE BOLT (ICC–ES ESR–1678) (MASONRY)
7. UNDERCUT ANCHORS IN CONCRETE SHALL BE TESTED AND QUALIFIED FOR USE IN ACCORDANCE WITH ACI 355.2 AND ICC–ES AC193. ACCEPTABLE PRODUCTS:
   A. HDA (ICC–ES ESR–1546) BY HILTI (CONCRETE)
   B. TORQ–CUT (ICC–ES ESR–2705) BY SIMPSON STRONG–TIE (CONCRETE)
8. POWDER ACTUATED FASTENERS IN CONCRETE/CMU SHALL BE TESTED AND QUALIFIED FOR USE IN ACCORDANCE WITH ACI 355.2 AND ICC–ES AC193. ACCEPTABLE PRODUCTS:
   A. X–U (ICC–ES ESR–2269) BY HILTI (CONCRETE/MASONRY/STEEL)
   B. POWDER ACTUATED FASTENERS (ICC–ES ESR–2138) BY SIMPSON STRONG TIE CONCRETE/MASONRY)
9. ADHESIVE ANCHORS IN CONCRETE/CMU SHALL BE TESTED AND QUALIFIED FOR USE IN ACCORDANCE WITH ACI 355.4 AND ICC–ES AC308. ACCEPTABLE PRODUCTS:
   A. HIT–RE 500–V3 (ICC–ES ESR–3814) BY HILTI (CONCRETE)
   B. HIT–HY 270 (ICC–ES ESR–4143) BY HILTI (MASONRY)
   C. SET–XP (ICC–ES ESR–2508) BY SIMPSON STRONG–TIE (CONCRETE)
   D. SET (ICC–ES ESR–1772) BY SIMPSON STRONG–TIE (MASONRY)
10. J–BOLTS SHALL BE FABRICATED FROM ASTM A36/A307 ROD. BOLTS, NUTS AND WASHERS SHALL BE GALVANIZED. EXPANSION BOLTS/SLEEVE ANCHORS SHALL NOT BE SUBSTITUTED FOR J–BOLTS WITHOUT PRIOR WRITTEN APPROVAL BY STRUCTURAL ENGINEER.

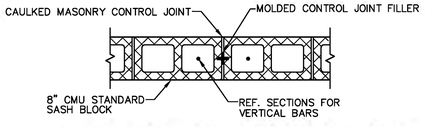

1 TYPICAL CRACK CONTROL JOINT

FASTENERS CONTINUED:

11. HEADED ANCHOR RODS SHALL BE FABRICATED FROM ASTM F1554 MATERIAL, FY=36 KSI.
12. SUBSTITUTION REQUESTS FOR PRODUCTS LISTED ABOVE SHALL BE SUBMITTED BY THE CONTRACTOR TO THE STRUCTURAL ENGINEER ALONG WITH CALCULATIONS THAT ARE PREPARED & SEALED BY A REGISTERED PROFESSIONAL ENGINEER. THE CALCULATIONS SHALL DEMONSTRATE THAT THE SUBSTITUTED PRODUCT IS CAPABLE OF ACHIEVING THE PERTINENT EQUIVALENT PERFORMANCE VALUES OF THE SPECIFIED PRODUCT USING THE APPROPRIATE DESIGN PROCEDURE AND/OR STANDARDS. SUBSTITUTED ANCHORS SHALL HAVE A VALID CURRENT EVALUATION (ICC–ES OR IAPMO–ES) REPORT.
13. REFERENCE STRUCTURAL STEEL NOTES FOR BOLTS CONNECTING STRUCTURAL STEEL COMPONENTS.

EXTERIOR COMPONENTS & CLADDINGS

ALL EXTERIOR COMPONENT AND CLADDING SYSTEMS (E.G. WINDOWS, CURTAIN WALLS, STOREFRONTS, DOORS, ARCHITECTURAL SIDINGS, METAL WALL AND ROOF PANELS, ROOFING SYSTEMS, SKYLIGHTS) MUST MEET MINIMUM WIND CODE REQUIREMENTS. CONTRACTOR MUST SUBMIT COMPONENT AND CLADDING ASSEMBLY WIND PRESSURE AND IMPACT RESISTANCE TESTING RATINGS AND REQUIRED ATTACHMENT PROCEDURES TO STRUCTURAL ENGINEER FOR REVIEW. ROOF TOP MECHANICAL EQUIPMENT AND THEIR SUPPORT COMPONENTS, AND ANCHORING OF THESE ITEMS TO THE STRUCTURE, SHALL BE DELEGATED DESIGN TO BE PERFORMED BY THE EQUIPMENT'S MANUFACTURER, TO MEET THE WIND PRESSURES CALCULATED PER ASCE 7–16 SECTION 29.4.1, USING THE WIND DESIGN PARAMETERS LISTED ON THE GENERAL STRUCTURAL NOTES DESIGN CRITERIA.

1. TESTED ASSEMBLIES
   A. THE CONTRACTOR SHALL INSTALL PROJECT SPECIFIC ASSEMBLIES THAT HAVE BEEN TESTED AND MEET THE APPLICABLE PERFORMANCE REQUIREMENTS LISTED BELOW. PROJECT ASSEMBLIES SHALL BE INSTALLED IN SAME MANNER AS TESTED ASSEMBLIES INCLUDING SYSTEM COMPONENTS, REINFORCEMENT, GLAZING, HARDWARE, ANCHORS AND FASTENING LOCATIONS, SEALANTS & ALL ACCESSORIES, AS APPLICABLE.
2. ASSEMBLY PERFORMANCE REQUIREMENTS
   A. STRUCTURAL PERFORMANCE: TESTED ASSEMBLY THAT PASSES STRUCTURAL PERFORMANCE REQUIREMENTS WHEN TESTED IN ACCORDANCE WITH THE APPLICABLE PERFORMANCE STANDARD(S) LISTED BELOW, AT A MINIMUM OF THE POSITIVE AND NEGATIVE DESIGN WIND–LOAD PRESSURES INDICATED ON THE STRUCTURAL DRAWINGS. TESTED ASSEMBLY SHALL BE NO SMALLER IN WIDTH AND LENGTH THAN ASSEMBLY INDICATED FOR USE ON THE PROJECT AND SHALL MATCH PROJECT ASSEMBLY INCLUDING ALL COMPONENTS AND SUBSTRATE(S).
   B. WINDBORNE–DEBRIS–IMPACT RESISTANCE: TESTED ASSEMBLY THAT PASSES LARGE–MISSILE IMPACT PROTECTION TESTING REQUIREMENTS ACCORDING TO ASTM E 1996 WHEN TESTED ACCORDING TO ASTM E 1886. TESTED ASSEMBLY SHALL BE NO SMALLER IN WIDTH AND LENGTH THAN ASSEMBLY INDICATED FOR USE ON THE PROJECT AND SHALL MATCH PROJECT ASSEMBLY INCLUDING ALL COMPONENTS AND SUBSTRATE(S).
3. ASSEMBLY PERFORMANCE STANDARDS
   A. ASTM E 330 – STANDARD TEST METHOD FOR STRUCTURAL PERFORMANCE OF EXTERIOR WINDOWS, DOORS, SKYLIGHTS AND CURTAIN WALLS BY UNIFORM STATIC AIR PRESSURE DIFFERENCE
   B. ASTM E 1592 – STANDARD TEST METHOD FOR STRUCTURAL PERFORMANCE OF SHEET METAL ROOF AND SIDING SYSTEMS BY UNIFORM STATIC AIR PRESSURE DIFFERENCE
   C. ASTM E 1886 – STANDARD TEST METHOD FOR PERFORMANCE OF EXTERIOR WINDOWS, CURTAIN WALLS, DOORS, AND STORM SHUTTERS IMPACTED BY MISSILE(S) AND EXPOSED TO CYCLIC PRESSURE DIFFERENTIALS
   D. ASTM E 1996 – STANDARD SPECIFICATION FOR PERFORMANCE OF EXTERIOR WINDOWS, CURTAIN WALLS, DOORS AND IMPACT PROTECTIVE SYSTEMS IMPACTED BY WINDBORNE DEBRIS IN HURRICANES
   E. FM 4450 – APPROVAL STANDARD FOR CLASS 1 INSULATED STEEL DECK ROOFS
   F. FM 4470 – APPROVAL STANDARD FOR SINGLE–PLY, POLYMER–MODIFIED BITUMEN SHEET, BUILT–UP ROOF (BUR) AND LIQUID APPLIED ROOF ASSEMBLIES FOR USE IN CLASS 1 AND NONCOMBUSTIBLE ROOF DECK CONSTRUCTION
   G. FM 4474 – AMERICAN NATIONAL STANDARD FOR EVALUATING THE SIMULATED WIND UPLIFT RESISTANCE OF ROOF ASSEMBLIES USING STATIC POSITIVE AND/OR NEGATIVE DIFFERENTIAL PRESSURES
   H. UL 580 – STANDARD FOR TESTS FOR UPLIFT RESISTANCE OF ROOF ASSEMBLIES
   I. UL 1897 – STANDARD FOR UPLIFT TESTS FOR ROOF COVERING SYSTEMS
4. ASSEMBLY SUBMITTALS
   A. SUBMITTALS SHALL CONSIST OF PROJECT SPECIFIC SHOP DRAWINGS AND ASSEMBLY TEST REPORTS, AS DESCRIBED BELOW. SUBMITTALS SHALL BE COMPLETE, CLEAR AND LEGIBLE; INCOMPLETE SUBMITTALS WILL BE REJECTED.
   B. SHOP DRAWINGS SHALL INCLUDE THE FOLLOWING ITEMS:
      1) SYSTEM DESCRIPTION INCLUDING MANUFACTURER'S NAME AND SPECIFIC PRODUCT MODEL NUMBER, NAME OR DESIGNATION.
      2) MANUFACTURER'S PRODUCT DATA/TECHNICAL INFORMATION AND DETAILS.
      3) SYSTEM LAYOUT PLANS, ELEVATIONS, CROSS–SECTIONS AND DETAILS AS APPLICABLE TO THE PROJECT.
      4) DESCRIPTION OF SYSTEM'S ASSEMBLY COMPONENTS (E.G. ROOF LAYERS, FRAME MEMBERS, REINFORCEMENT, DOOR TYPE, GLAZING, HARDWARE, ANCHORS AND FASTENING LOCATIONS, SEALANTS, ACCESSORIES). ALL COMPONENTS SHALL MATCH THOSE SPECIFIED ON ASSEMBLY TEST REPORTS.
      5) SHOP DRAWINGS SHALL INDICATE THE SYSTEM ATTACHMENT METHOD INCLUDING ANCHOR TYPE AND FASTENER LOCATIONS FOR EACH DIFFERENT TYPE OF SUBSTRATE. SYSTEM ATTACHMENT SHALL BE PER ASSEMBLY TEST REPORTS.
      6) ASSEMBLY TEST REPORTS OFTEN PROVIDE OPTIONS FOR MATERIALS AND FASTENING METHODS. SHOP DRAWINGS SHALL BE SPECIFIC TO THE MATERIAL OR METHOD THAT THE CONTRACTOR IS PROPOSING TO INSTALL ON THE PROJECT.
      7) CROSS–REFERENCING BETWEEN THE SHOP DRAWINGS AND THE ASSEMBLY TEST REPORTS IS ENCOURAGED, BUT THE SHOP DRAWINGS SHALL BE DETAILED ENOUGH TO STAND INDEPENDENT OF THE TEST REPORTS.

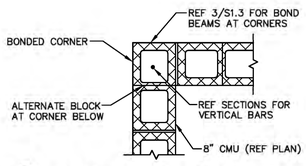

2 BONDED CORNER

EXTERIOR COMPONENTS & CLADDINGS CONTINUED:

4. ASSEMBLY SUBMITTALS
   C. ASSEMBLY TEST REPORTS SHALL INCLUDE THE FOLLOWING ITEMS:
      1) PERFORMANCE RATINGS BASED ON EVALUATION OF COMPREHENSIVE TESTING IN ACCORDANCE WITH THE APPLICABLE PERFORMANCE STANDARD(S) LISTED ABOVE.
      2) TESTING AND DEVELOPMENT OF REPORTS SHALL BE PERFORMED BY A QUALIFIED THIRD–PARTY TESTING AGENCY.
      3) TEST REPORTS SHALL BE SEALED BY THE QUALIFIED PROFESSIONAL ENGINEER RESPONSIBLE FOR THEIR PREPARATION.
      4) TEST REPORTS SHALL BE RECENT TO INCLUDE THE MOST CURRENT SYSTEM MANUFACTURER'S COMPONENTS AND AVAILABLE FASTENERS AND ACCESSORIES. EXPIRED TEST REPORTS SHALL BE REJECTED.
      5) TEST REPORTS SHALL BE SUBMITTED FOR EACH DIFFERENT TYPE OF ASSEMBLY ON THE PROJECT INCLUDING VARIATIONS OF SYSTEM COMPONENTS AND SUBSTRATES.

SPECIAL INSPECTIONS

SPECIAL INSPECTIONS INDEPENDENT OF THE CONTRACTOR, THE ARCHITECT, OR THE ENGINEER, SHALL BE PROVIDED BY A SPECIAL INSPECTOR EMPLOYED BY THE OWNER ACCORDING TO CHAPTER 17 OF THE IBC 2024. THE SPECIAL INSPECTOR SHALL OBSERVE THE WORK FOR CONFORMANCE WITH THE CONTRACT DOCUMENTS. THE SPECIAL INSPECTOR SHALL SEND WRITTEN REPORTS TO THE OWNER, THE ARCHITECT, THE ENGINEER AND THE CONTRACTOR. THE REPORTS SHALL INDICATE IF WORK INSPECTED WAS DONE IN CONFORMANCE WITH THE CONTRACT DOCUMENTS. ALL DISCREPANCIES SHALL BE BROUGHT TO THE IMMEDIATE ATTENTION OF THE CONTRACTOR FOR CORRECTION. IF THE DISCREPANCIES ARE NOT CORRECTED, THE SPECIAL INSPECTOR SHALL BRING THE DISCREPANCIES TO THE ATTENTION OF THE REGISTERED DESIGN PROFESSIONAL IN RESPONSIBLE CHARGE PRIOR TO THE COMPLETION OF THAT PHASE OF THE WORK. THE SPECIAL INSPECTOR SHALL SUBMIT A FINAL SIGNED REPORT STATING THAT THE SPECIAL INSPECTION WORK WAS, TO THE BEST OF THEIR KNOWLEDGE, IN OR NOT IN CONFORMANCE WITH THE DRAWINGS, SPECIFICATIONS AND APPLICABLE WORKMANSHIP PROVISIONS OF THE IBC 2024.

CONTINUOUS OR PERIODIC SPECIAL INSPECTION IS REQUIRED FOR THE FOLLOWING WORK:

REQUIRED VERIFICATION AND INSPECTION OF CONCRETE CONSTRUCTION

VERIFICATION AND INSPECTION	CONTINUOUS	PERIODIC
INSPECTION OF REINFORCING STEEL, INCLUDING PRESTRESSING TENDONS, AND PLACEMENT		X
INSPECT BOLTS TO BE INSTALLED IN CONCRETE PRIOR TO AND DURING PLACEMENT OF CONCRETE	X	
VERIFY USE OF REQUIRED DESIGN MIX		X
PERFORM SLUMP AND AIR CONTENT TEST, AND DETERMINE THE TEMPERATURE OF THE CONCRETE AT THE TIME OF SAMPLING FRESH CONCRETE FOR MAKING SPECIMENS FOR STRENGTH TESTS PER ACI 318	X	
INSPECTION OF CONCRETE AND SHOTCRETE PLACEMENT FOR PROPER APPLICATION TECHNIQUES	X	
INSPECTION FOR MAINTENANCE OF SPECIFIED CURING TEMPERATURE AND TECHNIQUES		X
INSPECTION OF PRESTRESSED CONCRETE APPLICATION OF PRESTRESSING FORCES	X	
VERIFICATION OF IN–SITU CONCRETE STRENGTH, PRIOR TO STRESSING OF TENDONS IN POST–TENSIONED CONCRETE AND PRIOR TO REMOVAL OF SHORES AND FORMS FROM BEAMS AND STRUCTURAL SLABS		X
ERECTION OF PRECAST CONCRETE MEMBERS		X
INSPECT FORMWORK FOR SHAPE, LOCATION AND DIMENSIONS OF THE CONCRETE MEMBER BEING FORMED		X

REQUIRED VERIFICATION AND INSPECTION OF STEEL CONSTRUCTION

VERIFICATION AND INSPECTION	CONTINUOUS	PERIODIC
MATERIAL VERIFICATION OF HIGH–STRENGTH BOLTS, NUTS AND WASHERS		X
INSPECTION OF HIGH STRENGTH BOLTING		X
INSPECTION OF WELDING:		
COMPLETE AND PARTIAL PENETRATION GROOVE WELDS	X	
MULTIPASS FILLET WELDS	X	
SINGLE–PASS FILLET WELDS		X
FLOOR AND ROOF DECK WELDS		X
INSPECTION OF STEEL FRAME JOINT DETAILS FOR COMPLIANCE WITH APPROVED CONSTRUCTION DOCUMENTS		X

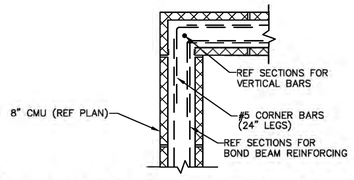

3 BOND BEAM AT EXTERIOR CORNERS

REQUIRED VERIFICATION AND INSPECTION OF SOILS

VERIFICATION AND INSPECTION TASK	CONTINUOUS DURING TASK LISTED	PERIODICALLY DURING TASK LISTED
VERIFY EXCAVATIONS ARE EXTENDED TO PROPER DEPTH AND HAVE REACHED PROPER MATERIAL		X
PERFORM CLASSIFICATION AND TESTING OF SELECT FILL MATERIALS		X
VERIFY USE OF PROPER MATERIALS, DENSITIES AND LIFT THICKNESSES DURING PLACEMENT AND COMPACTION OF SELECT FILL	X	
PRIOR TO PLACEMENT OF SELECT FILL, OBSERVE SUBGRADE AND VERIFY THAT SITE HAS BEEN PREPARED PROPERLY		X

REQUIRED LEVEL 1 SPECIAL INSPECTION OF MASONRY CONSTRUCTION (OCCUPANCY CATEGORY I, II, III)

INSPECTION TASK	CONTINUOUS DURING TASK LISTED	PERIODICALLY DURING TASK LISTED
AS MASONRY CONSTRUCTION BEGINS, THE FOLLOWING SHALL BE VERIFIED TO ENSURE COMPLIANCE:		
PROPORTIONS OF SITE–PREPARED MORTAR		X
PLACEMENT OF MASONRY UNITS AND CONSTRUCTION OF MORTAR JOINTS		X
LOCATION OF REINFORCEMENT, CONNECTORS AND ANCHORAGES		X
THE INSPECTION PROGRAM SHALL VERIFY:		
SIZE AND LOCATION OF STRUCTURAL ELEMENTS		X
TYPE, SIZE AND LOCATION OF ANCHORS, INCLUDING OTHER DETAILS OF ANCHORAGE OF MASONRY TO STRUCTURAL MEMBERS, FRAMES OR OTHER CONSTRUCTION		X
SPECIFIED SIZE, GRADE AND TYPE OF REINFORCEMENT		X
PROTECTION OF MASONRY DURING COLD WEATHER (TEMPERATURE BELOW 40°F) OR HOT WEATHER (TEMPERATURE ABOVE 90°F)		X
PRIOR TO GROUTING, THE FOLLOWING SHALL BE VERIFIED TO ENSURE COMPLIANCE:		
GROUT SPACE IS CLEAN		X
PLACEMENT OF REINFORCEMENT, CONNECTORS AND ANCHORAGES		X
CONSTRUCTION OF MORTAR JOINTS		X
GROUT PLACEMENT SHALL BE VERIFIED TO ENSURE COMPLIANCE WITH CODE AND CONSTRUCTION DOCUMENT PROVISIONS	X	
PREPARATION OF ANY REQUIRED GROUT SPECIMENS, MORTAR SPECIMENS AND/OR PRISMS SHALL BE OBSERVED	X	
COMPLIANCE WITH REQUIRED INSPECTION PROVISIONS OF THE CONSTRUCTION DOCUMENTS AND THE APPROVED SUBITTALS SHALL BE VERIFIED		X

REQUIRED VERIFICATION AND INSPECTION OF ANCHORS

VERIFICATION AND INSPECTION	CONTINUOUS	PERIODIC
CAST–IN–PLACE, POST–INSTALLED, MECHANICAL AND EPOXY SET ANCHORS: AS APPLICABLE, THE INSPECTION PROGRAM SHALL VERIFY THE ANCHOR TYPE, EMBEDMENT, TIGHTENING TORQUE, DIMENSIONS, HOLE DEPTH & DIAMETER AND CLEANOUT, EPOXY MIXING AND PLACEMENT PROCEDURES IN ACCORDANCE WITH THE CONTRACT DOCUMENTS AND THE CURRENT ICC–ES EVALUATION REPORT	FREQUENCY OF INSPECTION SHALL BE IN ACCORDANCE WITH THE CURRENT ICC–ES EVALUATION REPORT, OR PER THE SPECIAL INSPECTION REQUIREMENTS OF THE ANCHOR SUBSTRATE, WHICHEVER IS MORE STRINGENT	

3

CITY OF BROWNSVILLE ANIMAL SHELTER
HVAC UPGRADE CHILLER YARD CANOPY
DESIGN WIND PRESSURE DIAGRAM

DESIGN WIND PRESSURE FOR ROOF COMPONENTS & CLADDING (SERVICE)	
ZONE	P– (UPLIFT)
3	–70 PSF

GREEN, RUBIANO & ASSOCIATES
CONSULTING STRUCTURAL ENGINEERS
1220 WEST HARRISON
HARLINGEN, TEXAS 78501
(956)428–4491 EM: GRUBIANO@GRUBIANOENGINEERING.COM
FIRM REGISTRATION # F–4145

COPYRIGHT 2024 BY GREEN, RUBIANO & ASSOCIATES

NO: REVISION: BY:

COPY NO:

HVAC UPGRADES AT BROWNSVILLE ANIMAL REGULATION AND CARE FACILITY

OLMITO, TEXAS

F.M. 511

ethos engineering
1126 SOUTH COMMERCE ST.
HARLINGEN, TX
PHONE: 956-230-3435
TEXAS REGISTERED ENGINEERING FIRM
F-15598

DATE: MARCH 23, 2026
CHECKED BY: BD
DRAWN BY: HR
PROJECT NO.: 1178-50
CAD FILE: -
SHEET: S1.2

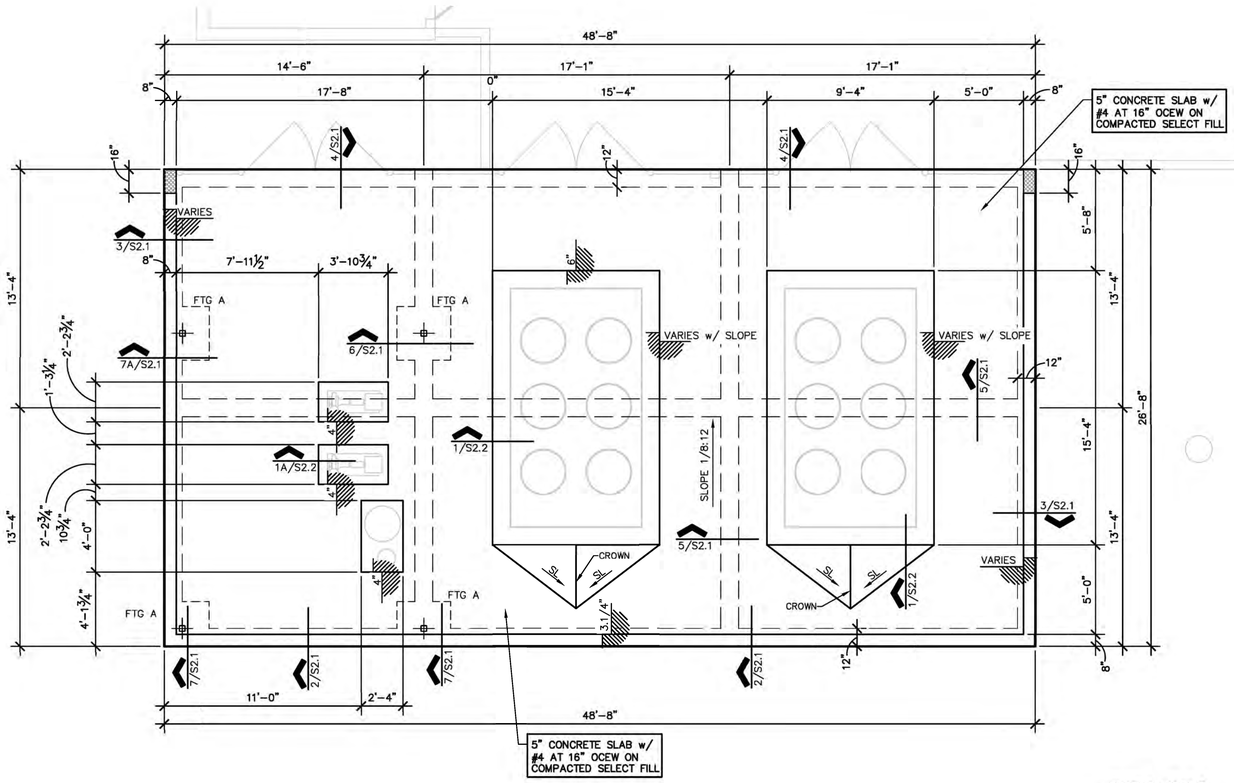

1 CHILLER YARD FOUNDATION PLAN

1/4" = 1'-0"

NOTES:

1. REFERENCE ROOF FRAMING PLAN FOR COLUMN AND BASEPLATE LOCATIONS. FOUNDATION PLAN DIMENSIONS GENERALLY DENOTE GRADE BEAM CENTERLINE.
2. COORDINATE LOCATION AND ORIENTATION OF CHILLER YARD FOUNDATION WITH M.E.P.
3. ALL CONDUITS GREATER THAN 1.1/2" IN DIAMETER SHALL BE RECESSED TO PROVIDE 1.1/2" CLEAR DISTANCE BETWEEN SLAB REBAR AND CONDUIT.
4. MAINTAIN 2" MINIMUM CLEAR DISTANCE BETWEEN ALL CONDUIT IN SLAB.
5. A SINGLE CONDUIT (MAX 3" O.D.) MAY BE PLACED WITHIN THE BEAM CAGE. ALL CONDUIT IN BEAM CAGES TO BE TIED TO STIRRUPS MINIMUM OF 4" FROM HORIZONTAL BARS.
6. ▨ INDICATES 8" CMU WALLS WITH #5 VERTICAL BARS AT 8" o/c.
6. PLUMBING LINES, CHILLED WATER LINES, & CONDUIT SHALL NOT BE PLACED IN BOTTOM OF GRADE BEAM TRENCHES.
7. PLUMBING LINES, CHILLED WATER LINES, & CONDUIT PASSING THROUGH GRADE BEAMS SHALL BE SLEEVED. BEAMS SHALL BE DEEPENED AND BENT REBAR PROVIDED IF LOCATION OF DRAIN LINES REQUIRE CUTTING BOTTOM BARS. REFERENCE DETAIL 3/S2.2.
8. COORDINATE SIZE AND LOCATION OF HOUSEKEEPING PADS WITH M.E.P.

N
PLAN NORTH

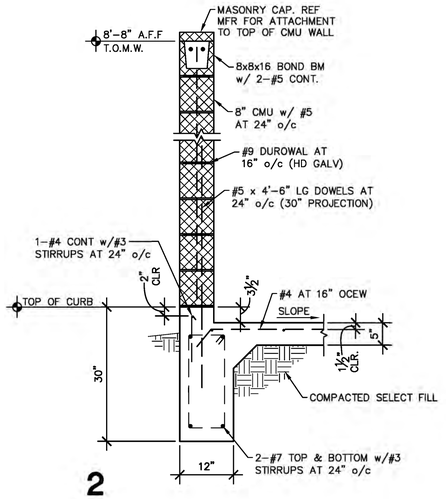

2

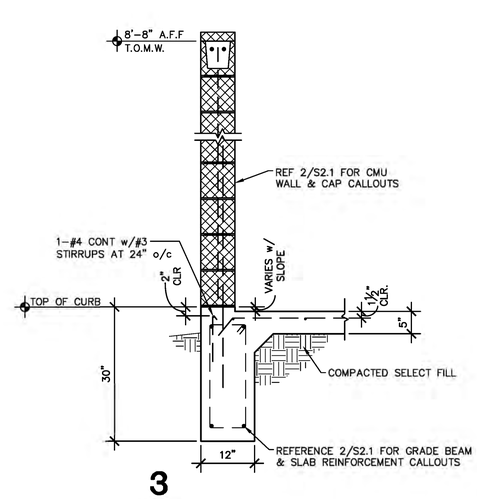

3

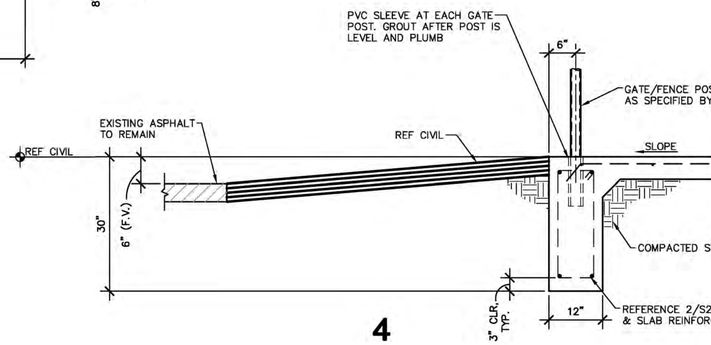

4

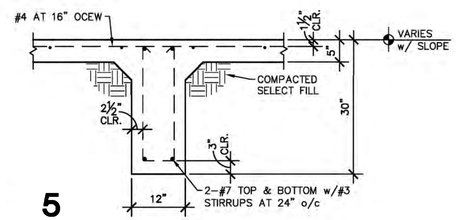

5

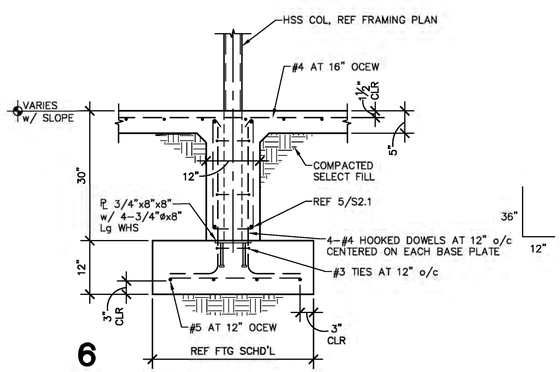

6

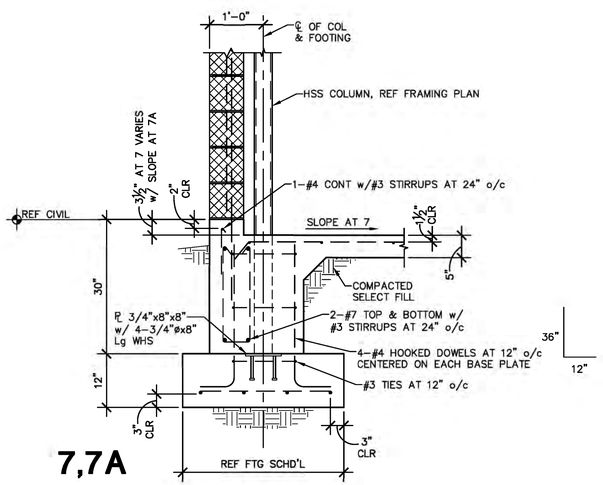

7,7A

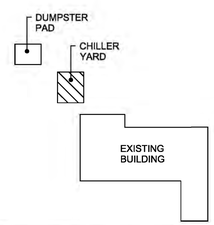

GREEN, RUBIANO & ASSOCIATES
CONSULTING STRUCTURAL ENGINEERS
1220 WEST HARRISON
HARLINGEN, TEXAS 78501
(956)428-4491 EM GRUBIANO@GMAIL.COM
FIRM REGISTRATION # F-4145

COPYRIGHT 2024 BY GREEN, RUBIANO & ASSOCIATES

NO:	REVISION:	BY:

COPY NO:

HVAC UPGRADES AT BROWNSVILLE ANIMAL REGULATION AND CARE FACILITY

OLMITO, TEXAS

F.M. 511

ethos engineering
1126 SOUTH COMMERCE ST.
HARLINGEN, TX
PHONE: 956-230-3435
TEXAS REGISTERED ENGINEERING FIRM F-15998

DATE:	MARCH 23, 2026
CHECKED BY:	BD
DRAWN BY:	HR
PROJECT NO.:	1178-50
CAD FILE:	-
SHEET:	S2.1

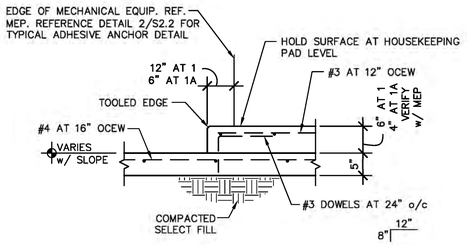

1,1A TYPICAL HOUSEKEEPING PAD DETAIL

NOTE: COORDINATE SIZE, LOCATION & QUANTITIES OF HOUSEKEEPING PADS WITH MEP

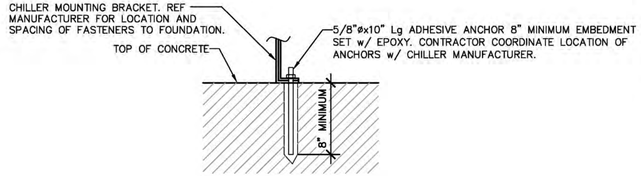

2 TYPICAL ADHESIVE DETAIL

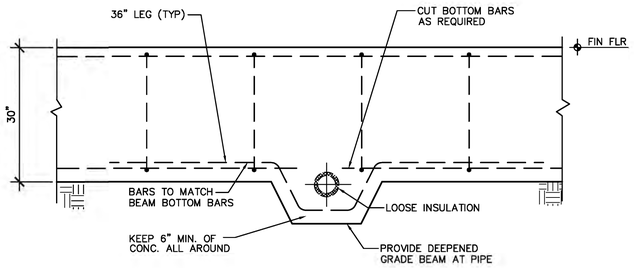

3 TOP OF SLEEVE INTERRUPTS REINFORCING

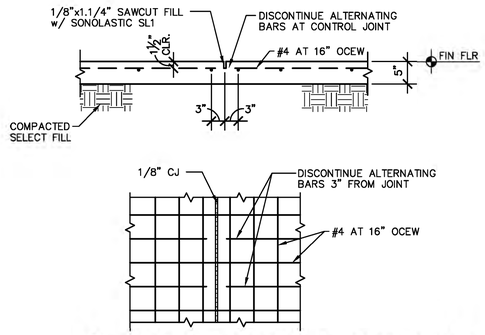

4 TYPICAL CONTROL JOINT DETAIL

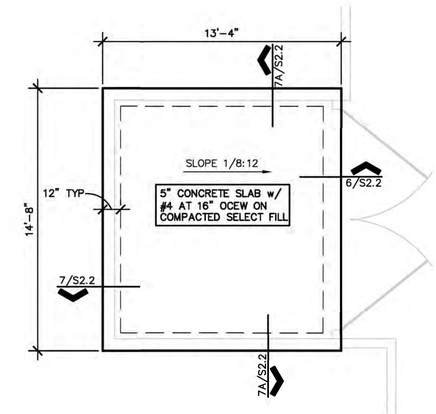

5 DUMPSTER FOUNDATION PLAN

1/4" = 1'-0"

N

PLAN NORTH

NOTES:

1. COORDINATE LOCATION AND ORIENTATION OF DUMPSTER FOUNDATION WITH M.E.P.

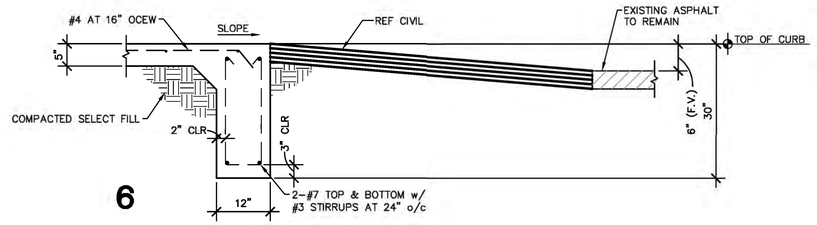

6

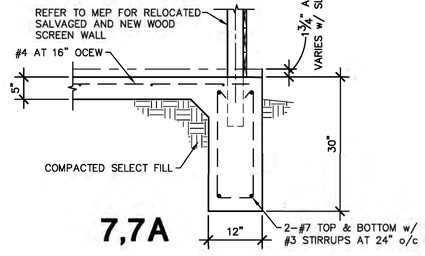

7,7A

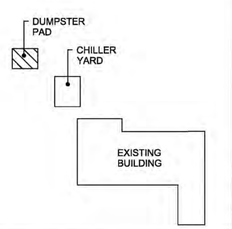

GREEN, RUBIANO & ASSOCIATES
CONSULTING STRUCTURAL ENGINEERS
1320 WEST HARRISON
HARLINGEN, TEXAS 78551
(956)428-4481 EM: GRUBIANO@GRUBIANOENGINEERING.COM
FIRM REGISTRATION # F-4145

COPYRIGHT 2024 BY GREEN, RUBIANO & ASSOCIATES

NO:	REVISION:	BY:

COPY NO:

HVAC UPGRADES AT BROWNSVILLE ANIMAL REGULATION AND CARE FACILITY

F.M. 511

OLMITO, TEXAS

ethos engineering
1126 SOUTH COMMERCE ST.
HARLINGEN, TX
PHONE: 956-230-3435
TEXAS REGISTERED ENGINEERING FIRM
F-15998

DATE:	MARCH 23, 2026
CHECKED BY:	BD
DRAWN BY:	HR
PROJECT NO.:	1178-50
CAD FILE:	-
SHEET:	S2.2

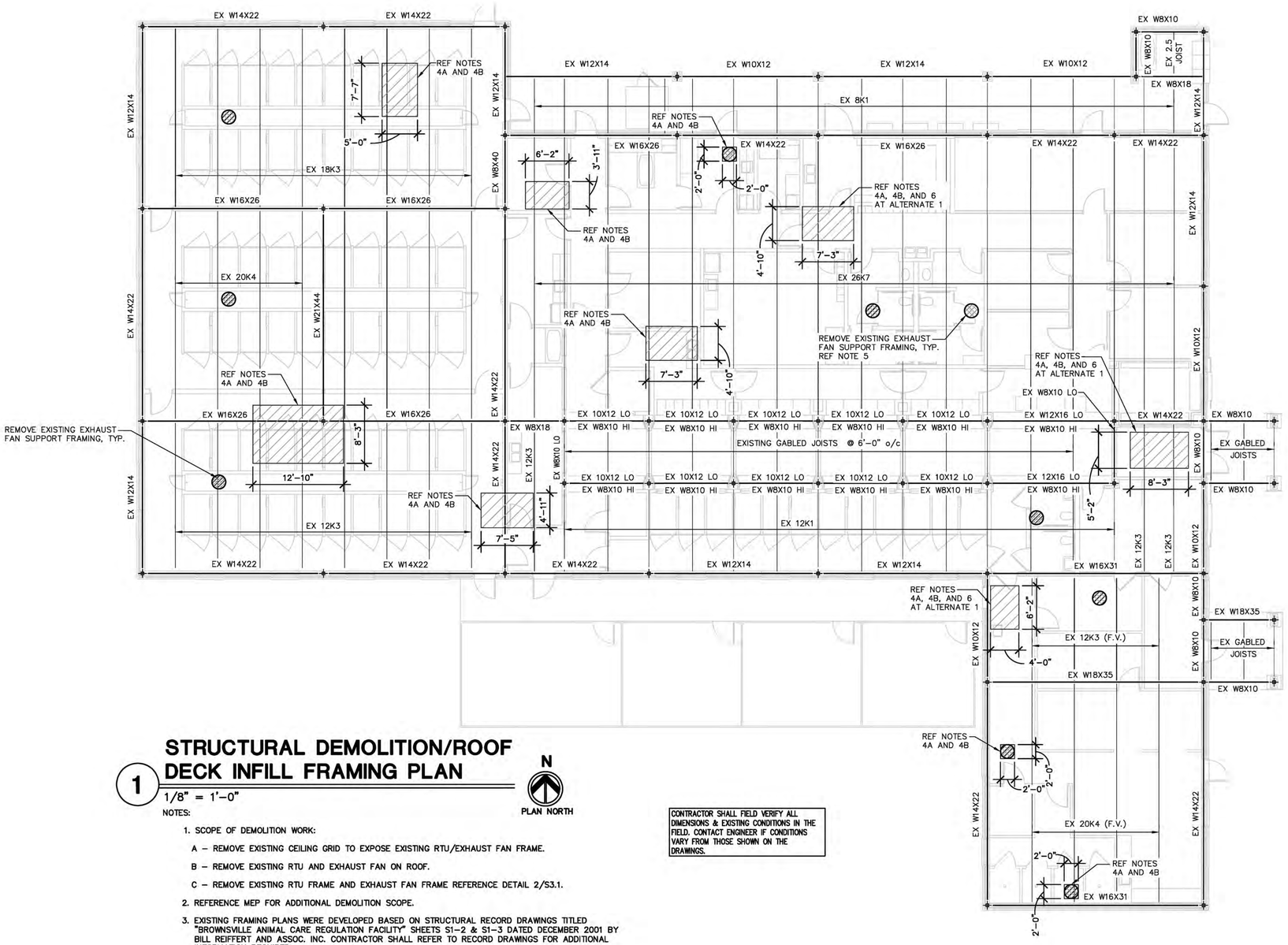

1 STRUCTURAL DEMOLITION/ROOF DECK INFILL FRAMING PLAN

1/8" = 1'-0"

CONTRACTOR SHALL FIELD VERIFY ALL DIMENSIONS & EXISTING CONDITIONS IN THE FIELD. CONTACT ENGINEER IF CONDITIONS VARY FROM THOSE SHOWN ON THE DRAWINGS.

NOTES:

1. SCOPE OF DEMOLITION WORK:
   - A – REMOVE EXISTING CEILING GRID TO EXPOSE EXISTING RTU/EXHAUST FAN FRAME.
   - B – REMOVE EXISTING RTU AND EXHAUST FAN ON ROOF.
   - C – REMOVE EXISTING RTU FRAME AND EXHAUST FAN FRAME REFERENCE DETAIL 2/S3.1.
2. REFERENCE MEP FOR ADDITIONAL DEMOLITION SCOPE.
3. EXISTING FRAMING PLANS WERE DEVELOPED BASED ON STRUCTURAL RECORD DRAWINGS TITLED "BROWNSVILLE ANIMAL CARE REGULATION FACILITY" SHEETS S1-2 & S1-3 DATED DECEMBER 2001 BY BILL REIFFERT AND ASSOC. INC. CONTRACTOR SHALL REFER TO RECORD DRAWINGS FOR ADDITIONAL INFORMATION REQUIRED.
4. SCOPE OF REPAIR WORK:
   - A – INSTALL NEW ROOF DECK INFILL AT ALL LOCATIONS WHERE EXISTING RTU'S AND EXHAUST FAN OPENINGS HAVE BEEN REMOVED. REFERENCE DETAIL 3/S3.1 FOR ROOF DECK INFILL.
   - B – INSTALL NEW ROOFING INTEGRATED WITH EXISTING ROOFING AT ALL LOCATIONS WHERE EXISTING RTU'S AND EXHAUST FAN OPENINGS HAVE BEEN INFILLED w/ NEW DECK.
5. ⊗ INDICATES LOCAMATIONS WHERE EXISTING EXHAUST FAN AND SUPPORT FRAME WILL BE DEMOLISHED TO ALLOW FOR INSTALLATION OF NEW LARGER EXHAUST FAN AND NEW SUPPORT FRAME.
6. IF ALTERNATE 1 IS NOT ACCEPTED, THEN EXISTING MECHANICAL UNITS AND ROOFING WILL REMAIN AS IS.

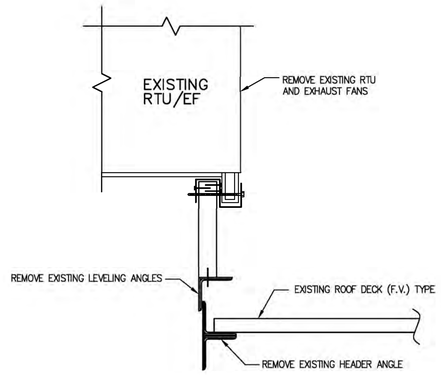

2 TYPICAL EXISTING RTU/EXHAUST FAN FRAME DEMOLITION DETAIL

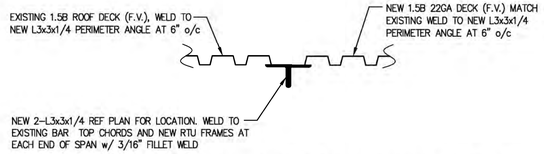

3 EXISTING TO NEW DECK TRANSITION DETAIL

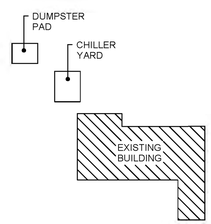

NO: REVISION: BY:

COPY NO:

STATE OF TEXAS
ROLANDO R. RUBIANO
86369
LICENSED PROFESSIONAL ENGINEER
3-23-2026

HVAC UPGRADES AT BROWNSVILLE ANIMAL REGULATION AND CARE FACILITY

OLMITO, TEXAS

F.M. 511

ethos engineering
1126 SOUTH COMMERCE ST.
HARLINGEN, TX
PHONE: 956-230-3435
TEXAS REGISTERED ENGINEERING FIRM F-15998

DATE: MARCH 23, 2026
CHECKED BY: BD
DRAWN BY: HR
PROJECT NO.: 1178-50
CAD FILE: -
SHEET: S3.1

GREEN, RUBIANO & ASSOCIATES
CONSULTING STRUCTURAL ENGINEERS
1230 WEST HARRISON
HARLINGEN, TEXAS 78550
(956)428-4491 EM: GRABORA@HOTMAIL.COM
FIRM REGISTRATION # F-4145

COPYRIGHT 2024 BY GREEN, RUBIANO & ASSOCIATES

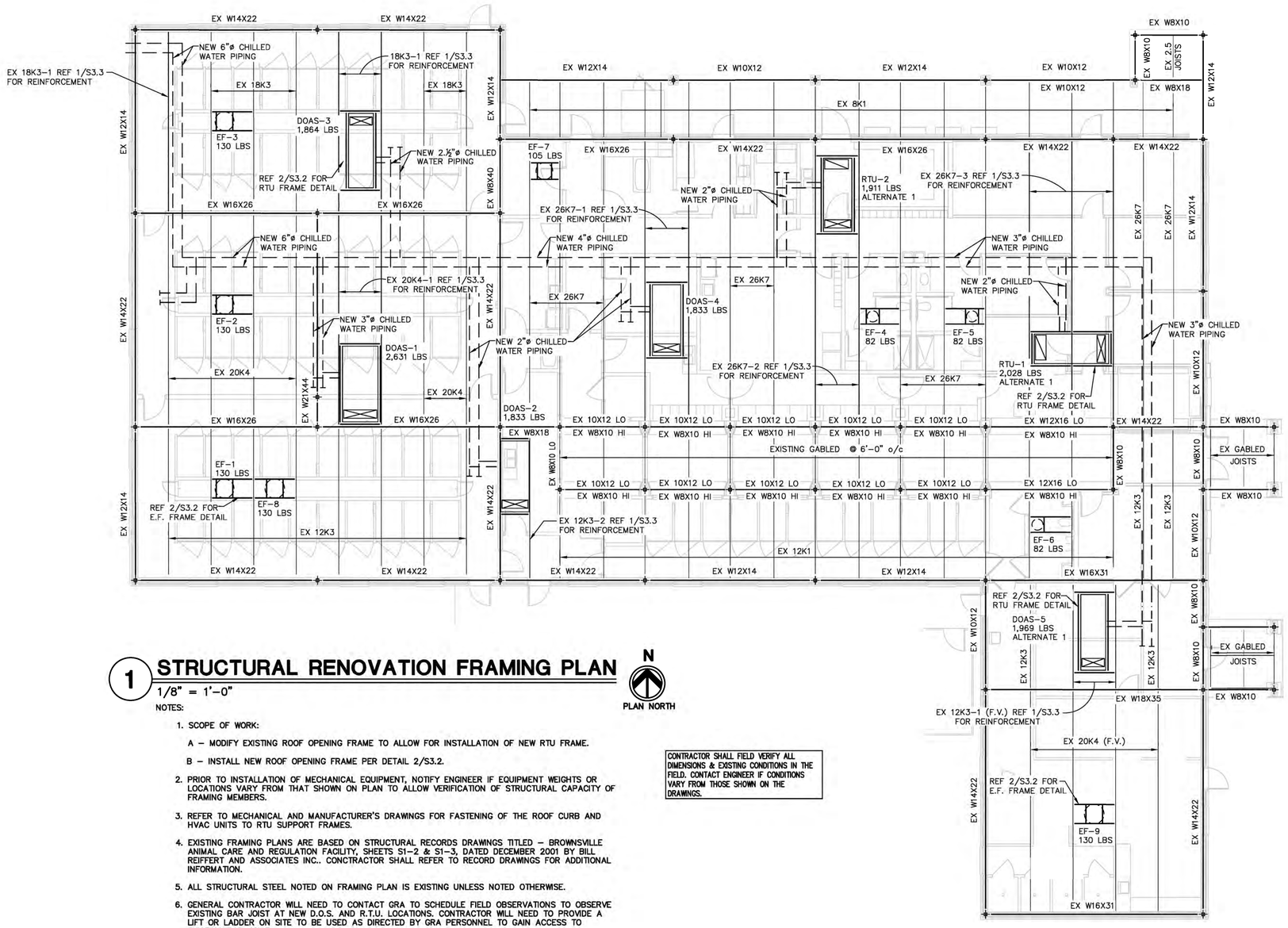

1 STRUCTURAL RENOVATION FRAMING PLAN

1/8" = 1'-0"

N

PLAN NORTH

NOTES:

1. SCOPE OF WORK:
   A – MODIFY EXISTING ROOF OPENING FRAME TO ALLOW FOR INSTALLATION OF NEW RTU FRAME.
   B – INSTALL NEW ROOF OPENING FRAME PER DETAIL 2/S3.2.
2. PRIOR TO INSTALLATION OF MECHANICAL EQUIPMENT, NOTIFY ENGINEER IF EQUIPMENT WEIGHTS OR LOCATIONS VARY FROM THAT SHOWN ON PLAN TO ALLOW VERIFICATION OF STRUCTURAL CAPACITY OF FRAMING MEMBERS.
3. REFER TO MECHANICAL AND MANUFACTURER'S DRAWINGS FOR FASTENING OF THE ROOF CURB AND HVAC UNITS TO RTU SUPPORT FRAMES.
4. EXISTING FRAMING PLANS ARE BASED ON STRUCTURAL RECORDS DRAWINGS TITLED – BROWNSVILLE ANIMAL CARE AND REGULATION FACILITY, SHEETS S1-2 & S1-3, DATED DECEMBER 2001 BY BILL REIFFERT AND ASSOCIATES INC.. CONCTRACTOR SHALL REFER TO RECORD DRAWINGS FOR ADDITIONAL INFORMATION.
5. ALL STRUCTURAL STEEL NOTED ON FRAMING PLAN IS EXISTING UNLESS NOTED OTHERWISE.
6. GENERAL CONTRACTOR WILL NEED TO CONTACT GRA TO SCHEDULE FIELD OBSERVATIONS TO OBSERVE EXISTING BAR JOIST AT NEW D.O.S. AND R.T.U. LOCATIONS. CONTRACTOR WILL NEED TO PROVIDE A LIFT OR LADDER ON SITE TO BE USED AS DIRECTED BY GRA PERSONNEL TO GAIN ACCESS TO EXISTING BAR JOIST.

CONTRACTOR SHALL FIELD VERIFY ALL DIMENSIONS & EXISTING CONDITIONS IN THE FIELD. CONTACT ENGINEER IF CONDITIONS VARY FROM THOSE SHOWN ON THE DRAWINGS.

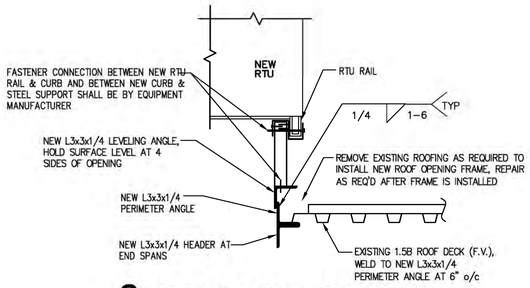

3 NEW RTU SUPPORT FRAME

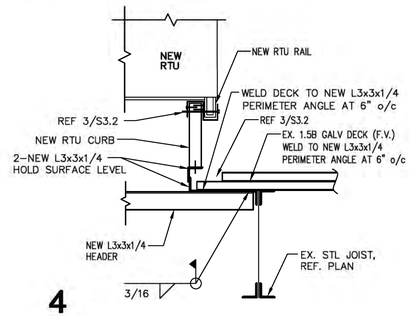

4

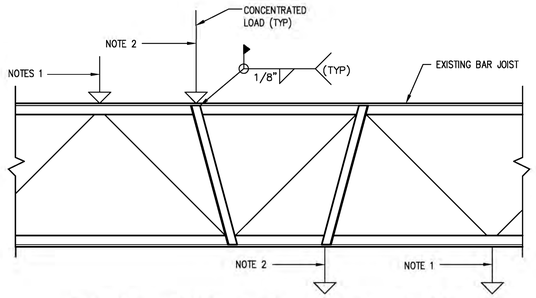

5 TYP. CONCENTRATED LOAD DETAIL

NOTES:

1. CONCENTRATED LOAD LOCATED AT PANEL POINT LOCATION – NO ADDTIONAL ANGLES REQUIRED.
2. CONCENTRATED LOAD (100 LBS. OR HEAVIER) NOT LOCATED AT PANEL POINT LOCATION – PROVIDE L2x2x1/4 TO PANEL POINT AS SHOWN.

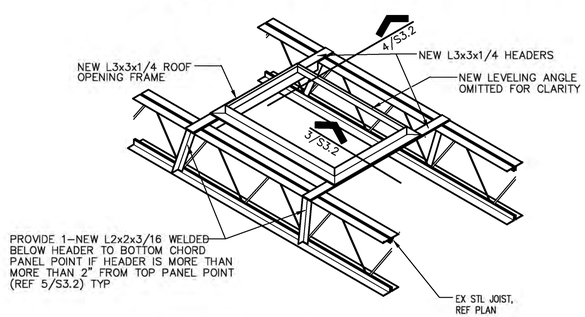

REF MECH'L OR ARCH'L FOR OPENING SIZE & LOCATION

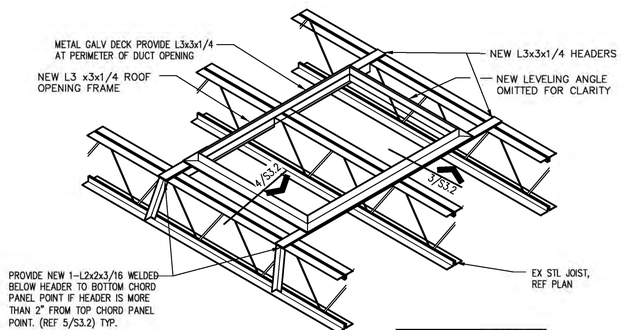

REF MECH'L FOR OPENING SIZE, LOCATION & DUCT OPENING REQUIREMENTS

2 ROOF OPENING FRAME DETAILS

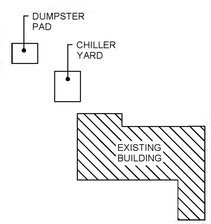

NO:	REVISION:	BY:

COPY NO:

STATE OF TEXAS
ROLANDO R. RUBIANO
86369
LICENSED PROFESSIONAL ENGINEER
3-23-2026

HVAC UPGRADES AT BROWNSVILLE ANIMAL REGULATION AND CARE FACILITY

OLMITO, TEXAS

F.M. 511

ethos engineering
1126 SOUTH COMMERCE ST.
HARLINGEN, TX
PHONE: 956-230-3435
TEXAS REGISTERED ENGINEERING FIRM
F-15998

DATE:	MARCH 23, 2026
CHECKED BY:	BD
DRAWN BY:	HR
PROJECT NO.:	1178-50
CAD FILE:	-
SHEET:	S3.2

GREEN, RUBIANO & ASSOCIATES
CONSULTING STRUCTURAL ENGINEERS
1220 WEST HARRISON
HARLINGEN, TEXAS 78550
(956)428-4481 EM: GRA@GRAENGINEERING.COM
FIRM REGISTRATION # F-4145

COPYRIGHT 2024 BY GREEN, RUBIANO & ASSOCIATES

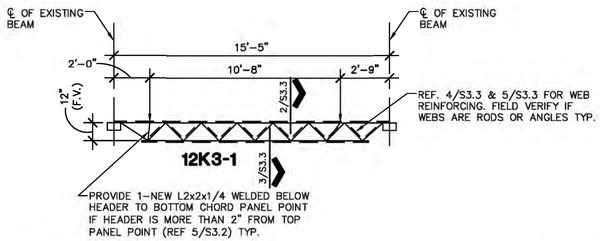

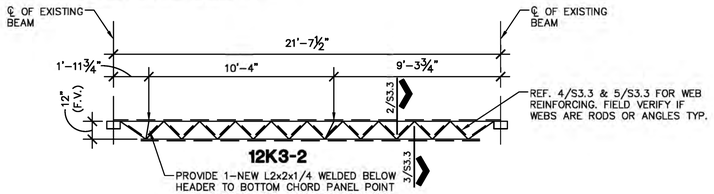

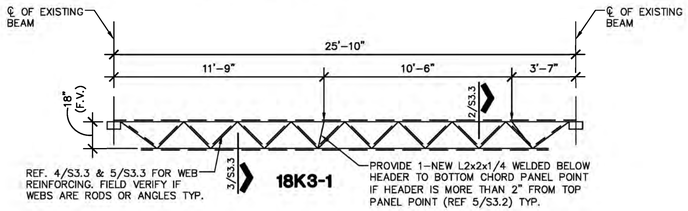

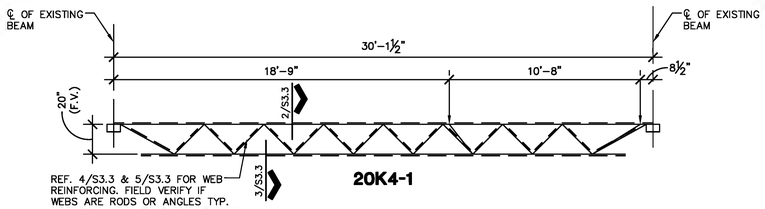

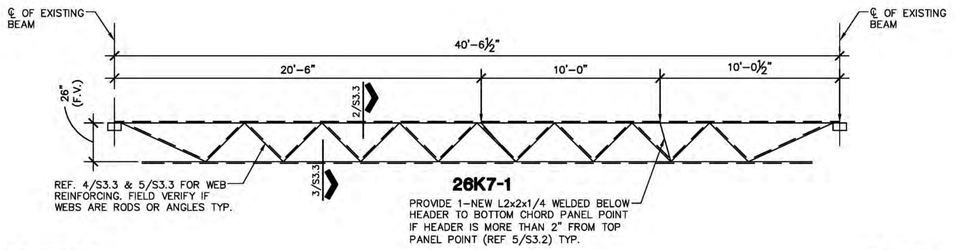

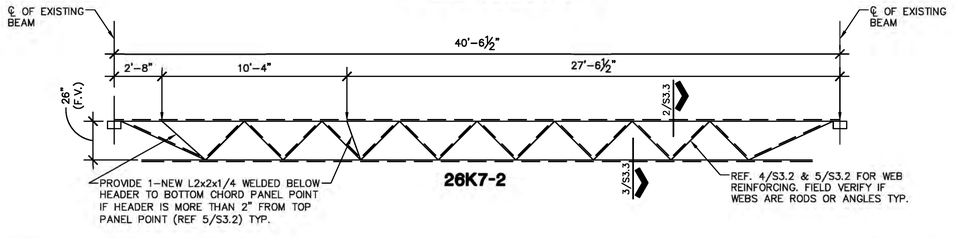

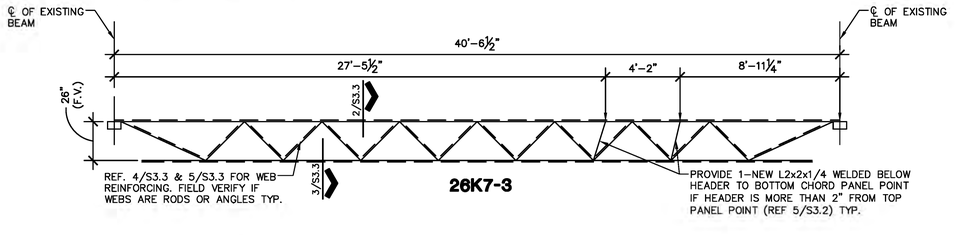

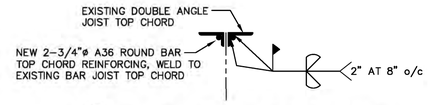

2 TYPICAL TOP CHORD REINFORCEMENT

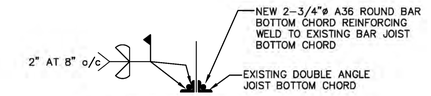

3 TYPICAL BOTTOM CHORD REINFORCEMENT

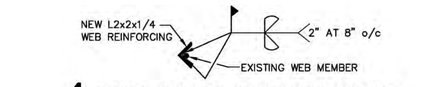

4 TYPICAL ROD WEB MEMBER REINFORCEMENT

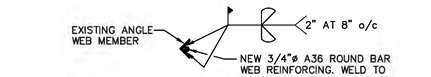

5 TYPICAL ANGLE WEB MEMBER REINFORCEMENT

1 EXISTING JOIST REINFORCING PROFILES

1/4" = 1'–0"

NOTES:

1. ALL EXISTING JOIST REINFORCEMENT PROFILES ARE SCHEMATIC AND PROVIDED FOR PRICING PURPOSES. ALL DIMENSIONS AND JOIST WEB LAYOUTS WILL NEED TO BE FIELD VERIFIED AFTER EXISTING JOIST ARE EXPOSED IN THE FIELD.
2. GENERAL CONTRACTOR WILL NEED TO CONTACT GRA TO SCHEDULE FIELD OBSERVATIONS TO OBSERVE EXISTING BAR JOIST AT NEW RTU LOCATIONS. CONTRACTOR WILL NEED TO PROVIDE A LIFT OR LADDERS ON SITE TO BE USED AS DIRECTED BY GRA PERSONNEL TO GAIN ACCESS TO EXISTING BAR JOIST.
3. ONCE GRA HAS ANALYZED THE EXISTING BAR JOIST. THE JOIST REINFORCEMENT JOIST PROFILE ON 1/S3.3 WILL BE REVISED AS REQUIRED, INCORPORATING REPAIR DETAILS 2–5/S3.3.

NO:	REVISION:	BY:

COPY NO:

HVAC UPGRADES AT BROWNSVILLE ANIMAL REGULATION AND CARE FACILITY

OLMITO, TEXAS

F.M. 511

ethos engineering
1126 SOUTH COMMERCE ST.
HARLINGEN, TX
PHONE: 956-230-3435
TEXAS REGISTERED
ENGINEERING FIRM
F-15998

DATE:	MARCH 23, 2026
CHECKED BY:	BD
DRAWN BY:	HR
PROJECT NO.:	1178-50
CAD FILE:	-
SHEET:	S3.3

GREEN, RUBIANO & ASSOCIATES
CONSULTING STRUCTURAL ENGINEERS
1230 WEST HARRISON
HARLINGEN, TEXAS 78550
(956)428-4491 EMAIL GRAGROUP@GRGENG.COM
FIRM REGISTRATION # F-4145

COPYRIGHT 2024 BY GREEN, RUBIANO & ASSOCIATES

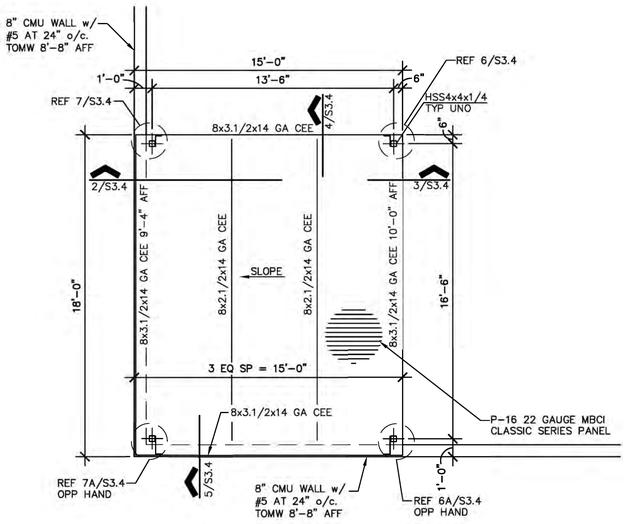

1 CANOPY FRAMING PLAN

1/4" = 1'-0" CENTRAL PLANT

NOTES:

1. ALL STRUCTURAL STEEL FRAMING MEMBERS SHALL BE SHOP PRIMED AND PAINTED, WITH A MINIMUM OF TWO (2) COATS OF CUSTOM COLOR TO BE SELECTED BY OWNER.
2. ROOF PANELS SHALL BE 16" WIDE P-16 22 GAUGE MBCI CLASSIC SERIES. PANELS SHALL HAVE CUSTOM PAINT COLOR TO BE SELECTED BY OWNER.
3. ALL HSS COLUMNS SHALL BE HSS4x4x1/14 UNLESS NOTED OTHERWISE.
4. ALL CEE PURLINS SHALL BE 8x3.1/2x14 GA UNLESS NOTED OTHERWISE.

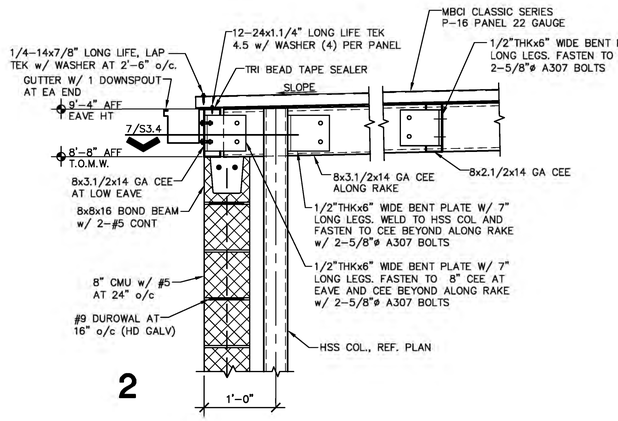

2

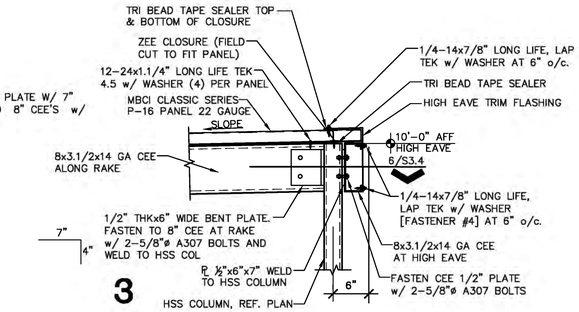

3

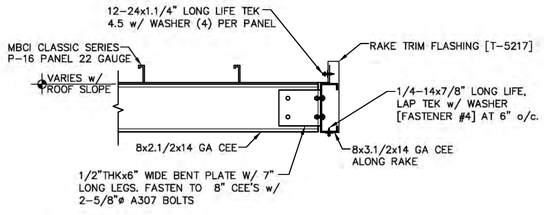

4

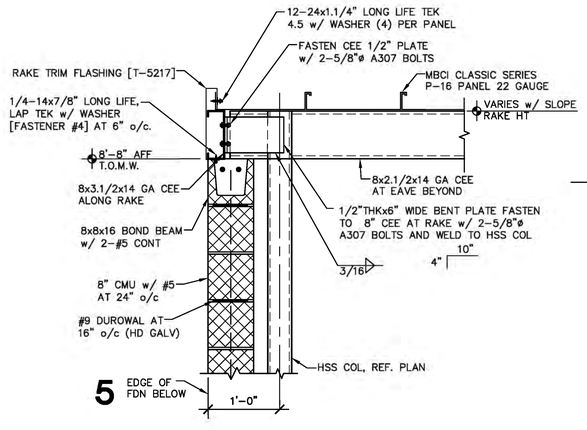

5

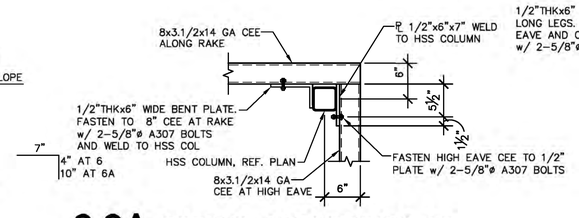

6,6A TYPICAL CONNECTION AT CORNER HSS COLUMN ALONG HIGH EAVE

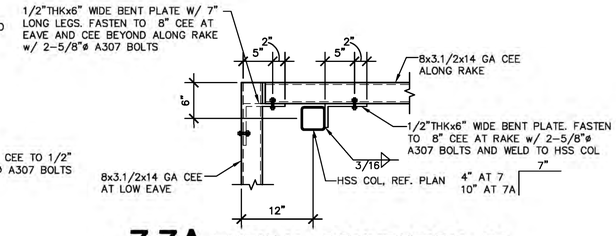

7,7A TYPICAL CONNECTION AT CORNER HSS COLUMN ALONG LOW EAVE

NO: REVISION: BY:

COPY NO:

HVAC UPGRADES AT BROWNSVILLE ANIMAL REGULATION AND CARE FACILITY

OLMITO, TEXAS

F.M. 511

ethos engineering
1126 SOUTH COMMERCE ST.
HARLINGEN, TX
PHONE: 956-230-3435
TEXAS REGISTERED ENGINEERING FIRM F-15598

DATE: MARCH 23, 2026
CHECKED BY: BD
DRAWN BY: HR
PROJECT NO.: 1178-50
CAD FILE: -
SHEET: S3.4

GREEN, RUBIANO & ASSOCIATES
CONSULTING STRUCTURAL ENGINEERS
1220 BENT HARRISON
HARLINGEN, TEXAS 78550
(956)428-5491 EM: GRANDRUBIANO@HOTMAIL.COM
FIRM REGISTRATION # F-4145

COPYRIGHT 2024 BY GREEN, RUBIANO & ASSOCIATES

Exhibit "G"

Brownsville Animal Regulation and Care Facility

HVAC Upgrades

ethos engineering
1126 S. Commerce St.
Harlingen, Tx 78550
O: (956) 230-3435
F: (956) 720-0830
Texas Registered Engineering Firm F-15998

TABLE OF CONTENTS

MEP SPECIFICATIONS FOR HVAC UPGRADES AT THE BROWNSVILLE ANIMAL REGULATION AND CARE FACILITY, BROWNSVILLE, TEXAS

March 23, 2026

DIVISION 1: GENERAL REQUIREMENTS

011000	Summary
012100	Allowances
012900	Payment Procedures
013100	Project Management and Coordination
013200	Selective Demolition
013300	Submittal Procedures
014200	References
016000	Product Requirements
017300	Execution
017400	Guarantees
017700	Closeout Procedures
017823	Operation and Maintenance Data
019113	General Commissioning Requirements

DIVISION 2: FENCES

024440	Chain Link Fences and Gates

DIVISION 3: CONCRETE

033000	Cast-In-Place Concrete (Limited Applications)

DIVISION 7: THERMAL AND MOISTURE PROTECTION

077200	Roof Accessories
077300	Wind Load Rated Roof Curbs and Restraint Brackets

DIVISION 9: PAINTING

099000	Painting

DIVISION 22: PLUMBING

220010	Summary of Plumbing Work
220517	Sleeves and Sleeve Seals for Plumbing Piping
220518	Escutcheons for Plumbing Piping
220523	General-Duty Valves for Plumbing Piping

1126 S. Commerce St.
Harlingen, Tx 78550
O. (956) 230-3435
F. (956) 720-0830
Texas Registered Engineering Firm F-15998

220529 Hangers and Supports for Plumbing Piping and Equipment
220548.13 Vibration Controls for Plumbing Piping and Equipment
220553 Identification for Plumbing Piping and Equipment
220719 Plumbing Piping Insulation
221113 Facility Water Distribution Piping
221116 Domestic Water Piping
221119 Domestic Water Piping Specialties
221316 Sanitary Waste and Vent Piping
221319 Sanitary Waste Piping Specialties

DIVISION 23: MECHANICAL

230513 Common Motor Requirements for HVAC Equipment
230516 Expansion Fittings and Loops for HVAC Piping
230517 Sleeves and Sleeve Seals for HVAC Piping
230518 Escutcheons for HVAC Piping
230519 Meters and Gages for HVAC Piping
230523 General – Duty Valves for HVAC Piping
230529 Hangers and Supports for HVAC Piping and Equipment
230548.13 Vibration Controls for HVAC
230553 Identification for HVAC Piping and Equipment
230593 Testing, Adjusting, and Balancing for HVAC
230713 Duct Insulation
230716 HVAC Equipment Insulation
230719 HVAC Piping Insulation
230800 Commissioning of HVAC
230900 Instrumentation and Controls
230993 Sequence of Operations for HVAC Controls
232113 Hydronic Piping
232116 Hydronic Piping Specialties
232123 Hydronic Pumps
232513 Water Treatment for Closed-Loop Hydronic Systems
232923 Variable Frequency Motor Controllers
233113 Metal Ducts
233300 Air Duct Accessories
233423 HVAC Power Ventilators
236423 Scroll Water Chillers
237313 Modular Central-Station Air-Handling Units

DIVISION 26: ELECTRICAL

260010 Summary of Electrical Work
260519 Low-Voltage Electrical Power Conductors and Cables

1126 S. Commerce St.
Harlingen, Tx 78550
O: (956) 230-3435
F: (956) 720-0830
Texas Registered Engineering Firm F-15998

260526	Grounding and Bonding for Electrical Systems
260529	Hangers and Supports for Electrical Systems
260533	Raceways and Boxes for Electrical Systems
260544	Sleeves and Sleeve Seals for Electrical Raceways and Cabling
260553	Identification for Electrical Systems
260800	Commissioning of Electrical Systems
262200	Low-Voltage Transformers
262413	Switchboards
262416	Panelboards
262713	Electricity Metering
262726	Wiring Devices
262816	Enclosed Switches and Circuit Breakers
265621	Exterior Lighting

DRAWINGS:

COVER	COVER SHEET

CIVIL:

C1	TOPOGRAPHIC SURVEY
C2	UTILITY, PAVING, AND GRADING PLAN
C3	STORMWATER POLLUTION PREVENTION PLAN

MECHANICAL:

M1.0	MECHANICAL GENERAL NOTES, SYMBOL LEGEND, & ABBREVIATIONS
M2.1	MECHANICAL DEMOLITION PLAN
M2.2	MECHANICAL DEMOLITION ROOF PLAN
M2.3	CENTRAL PLANT ENLARGED DEMOLITION PLAN
M3.1	MECHANICAL RENOVATION PLAN
M3.2	MECHANICAL RENOVATION ROOF PLAN
M3.3	CENTRAL PLANT ENLARGED MECHANICAL PLAN
M3.4	CHILLED WATER SCHEMATIC DIAGRAM AND ELEVATIONS
M4.1	MECHANICAL EQUIPMENT SCHEDULES
M5.1	MECHANICAL DETAILS
M5.2	MECHANICAL DETAILS

ELECTRICAL:

ES1.0	ELECTRICAL SITE PLAN
E1.0	ELECTRICAL GENERAL NOTES, SYMBOLS AND ABBREVIATIONS
E2.1	ELECTRICAL DEMOTILION PLAN
E2.2	ELECTRICAL DEMOLITION ROOF PLAN
E3.1	ELECTRICAL RENOVATION PLAN
E3.2	ELECTRICAL RENOVATION ROOF PLAN
E3.3	CENTRAL PLANT ENLARGED ELECTRICAL PLAN

ethos engineering
1126 S. Commerce St.
Harlingen, Tx 78550
O: (956) 230-3435
F: (956) 720-0830
Texas Registered Engineering Firm F-15998

E4.1 ELECTRICAL RISER DIAGRAMS
E5.1 ELECTRICAL PANEL SCHEDULES
E6.1 ELECTRICAL DETAILS

STRUCTURAL:

S1.1 STRUCTURAL GENERAL NOTES
S1.2 STRUCTURAL GENERAL NOTES
S2.1 CHILLER YARD FOUNDATION PLAN
S2.2 DUMPSTER FOUNDATION PLAN AND FOUNDATION DETAILS
S3.1 STRUCTURAL DEMOLITION / ROOF DECK INFILL FRAMING PLAN
S3.2 STRUCTURAL RENOVATION FRAMING PLAN
S3.3 EXISTING JOIST REINFORCING PROFILES
S3.4 CANOPY FRAMING PLAN AND DETAILS

March 23, 2026

SECTION 011000 - SUMMARY

PART 1 - GENERAL

1.1 RELATED DOCUMENTS

A. Drawings and general provisions of the Contract, including General and Supplementary Conditions and other Division 01 Specification Sections, apply to this Section.

1.2 SUMMARY

A. Section Includes:

1. Project information.
2. Work covered by Contract Documents.
3. Phased construction.
4. Work by Owner.
5. Work under separate contracts.
6. Future work.
7. Purchase contracts.
8. Owner-furnished products.
9. Contractor-furnished, Owner-installed products.
10. Access to site.
11. Coordination with occupants.
12. Work restrictions.
13. Specification and drawing conventions.
14. Miscellaneous provisions.

1.3 PROJECT INFORMATION

A. Project Identification: HVAC Upgrades at Brownsville Animal Regulation and Care Facility
1. Project Location: See Drawings.
2. Owner: City of Brownsville, Texas.

B. Engineer: Ethos Engineering, 1126 South Commerce, Harlingen, Texas 78550.

1.4 WORK COVERED BY CONTRACT DOCUMENTS

A. The following Summary of Work is intended as an aid to achieve an understanding of the various elements of work included in the project, as is not intended to be all-inclusive. Detailed descriptions of work and requirements are given in drawings and specifications.

B. Specification division numbers are not intended to dictate WHO will be doing the work. The following scope of mechanical work includes work specified in drawings and specifications. All the work must be done and coordinated, regardless of whether it is done under the Sub Contractor or by the General Contractor.

C. Scope of Work: Provide all materials and labor associated with complete operational systems. Major items of work include, but are not limited to:

1. Base Bid: Includes all work except the scope shown in Alternate Bid below.

2. Alternate Bid: Work associated with DOAS-5, RTUs-1 and 2, and related controls will be priced separately under Alternate Bid # 1. See drawings.

3. Demolition Work:
   a. Remove and dispose of existing HVAC systems including RTUs, ERVs, DOAS, exhaust fans, indicated ductwork, motorized dampers, sensors and control systems.
   b. See drawings for removal of associated materials such as support assemblies, roof curbs, ductwork connections, condensate drain piping, miscellaneous materials, controls, and devices associated with demolished equipment, including and not limited to, hangers, supports, mounting hardware, conduit & power wiring, etc. Clear area and prepare for new work.
   c. Save existing smoke detectors, wiring and safeties for reuse. Document devices that are not in working order.
   d. Where indicated, save existing power wiring, conduit and circuit breakers for reuse. Verify size and condition of circuit breakers, conduits and wiring to be reused. Demolish electrical equipment and other miscellaneous materials as noted in the drawings.
   e. For replaced equipment, demolish old BAS control systems that will no longer be used.

4. New Work: Provide all materials and labor associated with new fully operational mechanical and controls systems, including but not limited to the following:
   a. Air-cooled chillers with integral primary pumps, secondary chilled water pumps, air separators, expansion tank, gauges, fittings, valves, hardware, hydronic specialties, and chemical treatment, and plumbing systems related to make up water to the chiller plant. Provide concrete pads and rain-canopy for pumps and hydronic specialties.
   b. Hydronic distribution systems, including painted, insulated and jacketed chilled water piping, pipe connections, valves, piping specialties, hot dipped galvanized pipe stanchions and piping supports, as indicated on piping plans and schematics. Provide insulation on cold surfaces capable of generating condensation. Aluminum jacketing for all piping exposed outdoors and in the pump room.
   c. Insulated chilled water piping, valves, fittings, pump bodies and cold surfaces capable of generating condensation.
   d. Hydronic central station Dedicated Outside Air Systems (DOAS), RTUS, roof curbs, support assembly, duct transitions, piping, miscellaneous materials, utilities and accessories, indicated in the drawings.
   e. Provide new EFs, roof curbs, ductwork, and related controls.
   f. Ductwork modifications, motorized dampers, and other accessories to deliver a complete and operational system.
   g. Testing, Adjusting, & Balancing (TAB).
   h. Controls: Provide new BAS. Coordinate with equipment supplier and fire alarm contractor to provide fully integrated and operational controls, including unitary controllers, software, sensors, training, etc.

i. Shop drawing submittals for all mechanical systems including but not limited to equipment, ductwork and piping. Coordination drawings for placing of mechanical systems in relation to work by other disciplines.
j. Coordinate electrical work with Div. 26 as required.
k. Coordinate plumbing work with Div. 22.
l. Coordinate work with structural for chiller pad, canopy, roof penetrations, windstorm certification.
m. Coordinate work with roofing contractor.
n. Coordinate fire alarm related work with Fire Alarm Contractor. Provide smoke detectors, wiring and controls for units, 2000 cfm and larger, where none exist.
o. Provide cutting and patching and touch up painting as required.
p. Provide architectural, structural, concrete, painting work per plans.

5. Provide windstorm certification for exterior work. Contractor is responsible for providing windstorm certification inspections and certifications for rooftop equipment. Contractor must notify Inspector prior to installing equipment, and apprise inspector of work scheduling involving equipment requiring wind inspection / certification, so that inspections may be carried out at required stage(s) of construction. Cost for inspection shall be borne by the Contractor. Inspector shall be certified by the Texas Department of Insurance (see www.tdi.state.tx.us for a list of certified Inspectors).

6. Commissioning: Provide assistance with commissioning services per specifications. This includes completing systems readiness checklists, performing functional testing, providing operator training, etc.

7. Allowances: The owner has set aside allowances for unforeseen circumstances. See Section 012100.

D. Type of Contract:
1. Project will be constructed under a single prime contract.

1.5 PHASED CONSTRUCTION

A. The Work shall be conducted in one phase.

B. Before commencing Work, submit an updated copy of Contractor's construction schedule showing the sequence, commencement and completion dates for all phases of the Work.

1.6 WORK BY OWNER

A. Not Applicable.

1.7 WORK UNDER SEPARATE CONTRACTS

A. Not Applicable.

1.8 FUTURE WORK

A. Not Applicable.

1.9 PURCHASE CONTRACTS

A. Not Applicable.

1.10 OWNER-FURNISHED PRODUCTS

A. Not Applicable.

1.11 CONTRACTOR-FURNISHED, OWNER-INSTALLED PRODUCTS

A. Not Applicable.

1.12 ACCESS TO SITE

A. General: Contractor shall have limited use of Project site for construction operations as indicated on Drawings by the Contract limits and as indicated by requirements of this Section.
   1. Access to some areas is restricted and controlled. Coordinate details with Owner.

B. Use of the Site: Limit use of the premises to work in areas indicated. Do not disturb portions of the site beyond the areas in which the Work is indicated.
   1. Owner Occupancy: Allow for Owner occupancy and use by the public.
   2. Limits: Confine operations to areas within contract limits indicated.
   3. Driveways, Walkways and Entrances: Keep driveways parking garage, loading areas, and entrances serving premises clear and available to Owner, Owner's employees, and emergency vehicles at all times. Do not use these areas for parking or storage of materials.
      a. Schedule deliveries to minimize use of driveways and entrances by construction operations.
      b. Schedule deliveries to minimize space and time requirements for storage of materials and equipment on-site.

C. Condition of Existing Building: Maintain portions of existing building affected by construction operations in a weather-tight condition throughout construction period. Repair damage caused by construction operations.

D. Site Safety: Take every precaution to ensure the site does not present a threat to the safety of occupants and/or workers. Minimal safety requirements include, but are not limited to the following:
   1. Temporary fencing around construction areas, and around equipment while site work is in progress.
   2. Yellow caution tape and construction barricades along open trenches during the day. Trenches shall be covered at night and warning lights provided on construction barricades.
   3. Work shall take place with minimal disruption to Owner's operations in areas surrounding the job site.

1.13 COORDINATION WITH OCCUPANTS

A. Full Owner Occupancy: Owner will occupy site and existing building(s) during entire construction period. Cooperate with Owner during construction operations to minimize conflicts and facilitate Owner usage. Perform the Work so as not to interfere with Owner's day-to-day operations. Maintain existing exits unless otherwise indicated.
   1. Notify Owner not less than 72 hours in advance of activities that will affect Owner's operations.
   2. Maintain access to existing walkways, corridors, and other adjacent occupied or used facilities. Do not close or obstruct walkways, corridors, or other occupied or used facilities without written permission from Owner and authorities having jurisdiction.

1.14 WORK RESTRICTIONS

A. Work Restrictions, General: Comply with restrictions on construction operations.
   1. Comply with limitations on use of public streets and with other requirements of authorities having jurisdiction.

B. On-Site Work Hours: Schedule activities in close coordination with Owner.

C. Existing Utility Interruptions: Do not interrupt utilities serving facilities occupied by Owner or others unless permitted under the following conditions and then only after providing temporary utility services according to requirements indicated:
   1. Notify Owner not less than two days in advance of proposed utility interruptions.
   2. Obtain Owner's written permission before proceeding with utility interruptions.

D. Noise, Vibration, and Odors: Coordinate operations that may result in high levels of noise and vibration, odors, or other disruption to Owner occupancy with Owner.
   1. Notify Owner not less than two days in advance of proposed utility interruptions.
   2. Obtain Owner's written permission before proceeding with utility interruptions.

E. Nonsmoking Building: Smoking is not permitted within the building or within 25 feet of entrances, operable windows, or outdoor-air intakes.

F. Controlled Substances: Use of tobacco products and other controlled substances within the existing building is not permitted.

G. Employee Identification: Provide identification tags for Contractor personnel working on Project site. Require personnel to use identification tags at all times.

H. Employee Screening: Comply with Owner's requirements for drug and background screening of Contractor personnel working on Project site.
   1. Maintain list of approved screened personnel with Owner's representative.

1.15 WORK SEQUENCE AND DEADLINES

A. **The Bid requires that the project be certified Finally Complete within the time limits imposed in the Bid Form.** Failure to comply with contract completion dates will result in assessment of liquidated damages.

B. **This secure facility is occupied 24/7. All work, including extended utility outages must be coordinated closely with the Owner.**

C. The Work shall be conducted as one project, but in multiple phases. Coordinate details with Owner. It is imperative that a non-disruptive environment be maintained at all times.

D. Before commencing Work, submit an updated copy of Contractor's construction schedule showing the sequence, commencement and completion dates for all phases of the Work.

1.16 COORDINATION

A. All questions, requests for information, submittals, and correspondence from the Contractor shall be submitted via the General Contractor, who will forward to the Engineer.

B. Contractor shall not make any changes to design without written authorization from the Engineer. If changes are requested by the Owner, Engineer, General Contractor, Suppliers, Manufacturers, or any others, Contractor should issue a written RFI for response by the Engineer.

C. Contractor shall issue seven (7) days written notice prior to any activities that require the presence of the Engineer at the job-site. This applies to all inspections required by specifications, and particularly to those where work will be covered (below grade).

D. Issue written notification of the following tasks and allow five (5) days for Engineer to respond and schedule an inspection as required:
   1. Electrical:
      a. Upon completion of pulling all wiring, making all terminations, labeling and color-coding wires at the panel-boards and prior to installing their covers.
   2. When ready for Systems Readiness Checklists (Commissioning).
   3. When ready for Functional Performance testing (Commissioning).
   4. When ready for Substantial Completion Inspection.
   5. When ready for Final Inspection.
   6. Failure to issue written notification may result in work having to be redone to allow for proper inspection. It is this contractor's responsibility to make sure Engineer receives notification.

E. Construction Coordination:

   1. The contractor shall supply a complete and comprehensive construction schedule for the project. This schedule shall include durations for the specific tasks required, and shall demonstrate a construction process chain of events, organized to create minimum disruption and minimum inconvenience to building occupants.
   2. Contractor shall organize daily work schedules to accommodate the building occupants' functions, comfort, and work schedules. Mandatory achievement of a non-disruptive environment shall be the sole responsibility of the Contractor, and shall at no time incur additional charges for Owner. This shall include weekend and evening work hours, if necessary, to accomplish non-disruptive requirement, and on-schedule completion.
   3. A non-disruptive environment shall be defined as: an environment where large-scale activities, or activities causing extreme noise and/or inconvenience are minimal in occupied areas during occupied times. When disruptive tasks must occur during

occupied hours, such activities shall be coordinated with Owner's personnel a minimum of one week in advance.

F. Waste Material and Debris: All waste material and debris from this project shall become the property of the contractor and shall be removed from the site. Exterior of the site shall be kept clean and free of material and debris from this project at all times. All waste material and debris generated by any work under this contract shall be handled, transported, stored, and disposed by the contractor and by his subcontractors in accordance with all applicable Federal, State, and local laws, ordinances, regulations, court orders, or other types of rules or rulings having the effect of law including, but not limited to, Executive Order 11752, 17 December 1978; the Federal Water pollution Control Act, as amended, 33 USC, Sec. 1251 et seq; the Clean Air Act, as amended, 42 USC, Sec. 7401 et seq; the Solid Waste Disposal Act, as amended, 41 USC sec 136 et seq; the Endangered Species Act of 1973, as amended, 16 USC, Sec 153 et seq; and the Environmental Protection Agency guidelines on thermal processing and land disposal of solid waste (40 CFR 240 and 241).

1.17 SPECIFICATION AND DRAWING CONVENTIONS

A. Specification Content: The Specifications use certain conventions for the style of language and the intended meaning of certain terms, words, and phrases when used in particular situations. These conventions are as follows:

1. Imperative mood and streamlined language are generally used in the Specifications. The words "shall," "shall be," or "shall comply with," depending on the context, are implied where a colon (:) is used within a sentence or phrase.
2. Specification requirements are to be performed by Contractor unless specifically stated otherwise.

B. Division 01 General Requirements: Requirements of Sections in Division 01 apply to the Work of all Sections in the Specifications.

1.18 SUBMITTALS

A. Manufacturer's standard dimensioned drawings, performance and product data shall be edited to delete reference to equipment, features, or information, which is not applicable to the equipment being supplied for this project.

B. Faxes and copies of faxes are not acceptable.

C. Provide sufficient copies of approved data, with the engineer's approved stamp, for inclusion in the operations and maintenance manuals.

D. Electrical Submittals shall be submitted in no more than one three ring binder.

E. Partial submittals shall not be reviewed until a complete bound submittal package is received.

F. Allow two weeks for initial submittal review by Engineer, from the day it is received at the Engineer's office.

G. Allow one week for review of resubmittals by Engineer.

H. All submittal review comments shall be forwarded and distributed by the Engineer as per Division 1.

1.19 SCHEDULE OF VALUES

A. Schedule of Values shall be included with bound submittals. Submittals without a Schedule of Values **shall not** be reviewed.

B. Contractor shall submit a Schedule of Values reflecting the total value of Work in the Contract, and broken down into the following items as a minimum, with a line item for Materials/Equipment and another for Labor.
   1. Structural
   2. Concrete
   3. HVAC
   4. Electrical
   5. Controls
   6. TAB
   7. Commissioning
   8. Allowances
   9. Miscellaneous.
   10. Administrative and project management.

1.20 MISCELLANEOUS PROVISIONS

A. Code Compliance:
   1. Occupational Safety and Health Act (OSHA)
   2. National Electric Code (NEC)
   3. National Fire Code
   4. International Building Code
   5. UL 916
   6. Local ordinances

PART 2 - PRODUCTS (Not Used)

PART 3 - EXECUTION (Not Used)

END OF SECTION 011000

SECTION 012100 - ALLOWANCES

PART 1 - GENERAL

1.1 RELATED DOCUMENTS

A. Drawings and general provisions of the Contract, including General and Supplementary Conditions and other Division 01 Specification Sections, apply to this Section.

1.2 SUMMARY

A. Section includes administrative and procedural requirements governing allowances.
   1. Certain items are specified in the Contract Documents by allowances. Allowances have been established in lieu of additional requirements and to defer selection of actual materials and equipment to a later date when direction will be provided to Contractor. If necessary, additional requirements will be issued by Change Order.

1.3 SELECTION AND PURCHASE

A. At the earliest practical date after award of the Contract, advise Engineer of the date when final selection and purchase of each product or system described by an allowance must be completed to avoid delaying the Work.

B. At Engineer's request, obtain proposals for each allowance for use in making final selections. Include recommendations that are relevant to performing the Work.

C. Purchase products and systems selected by Engineer from the designated supplier.

1.4 ACTION SUBMITTALS

A. Submit proposals for purchase of products or systems included in allowances, in the form specified for Change Orders.

1.5 INFORMATIONAL SUBMITTALS

A. Submit invoices or delivery slips to show actual quantities of materials delivered to the site for use in fulfillment of each allowance.

B. Submit time sheets and other documentation to show labor time and cost for installation of allowance items that include installation as part of the allowance.

C. Coordinate and process submittals for allowance items in same manner as for other portions of the Work.

1.6 COORDINATION

A. Coordinate allowance items with other portions of the Work.

1.7 ALLOWANCES

A. Use the allowance only as directed by Engineer for Owner's purposes and only by Change Orders that indicate amounts to be charged to the allowance.

B. Contract Sum shall include Contractor's overhead and profit, insurance and bonding for the Contingency and other specific Allowances.

C. Change Orders or Allowance Expenditures authorizing use of funds from the Contingency or other specific Allowances will not include Contractor's overhead and profit, nor insurance and bonding. Other related costs such as equipment rental, delivery charges, etc. can be included in these costs, but all costs must be submitted by the general contractor with itemized (or unit) pricing from the subcontractor(s) and/or material supplier(s).

D. At Project closeout, credit unused amounts remaining in allowances to Owner by Change Order.

PART 2 - PRODUCTS (Not Used)

PART 3 - EXECUTION

3.1 EXAMINATION

A. Examine products covered by an allowance promptly on delivery for damage or defects. Return damaged or defective products to manufacturer for replacement.

3.2 PREPARATION

A. Coordinate materials and their installation for each allowance with related materials and installations to ensure that each allowance item is completely integrated and interfaced with related work.

3.3 SCHEDULE OF ALLOWANCES

A. Include listed Owner's Contingency Allowance for additional work and unforeseen circumstances. Allowance will be used only as directed by Owner and Engineer with a written consent.
   1. Allowance No. 1 for unforeseen circumstances: **$75,000**.
   2. Allowance No. 2 for unforeseen roofing and structural work: **$25,000**.

END OF SECTION 012100

SECTION 012900 - PAYMENT PROCEDURES

PART 1 - GENERAL

1.1 RELATED DOCUMENTS

A. Drawings and general provisions of the Contract, including General and Supplementary Conditions and other Division 01 Specification Sections, apply to this Section.

1.2 SUMMARY

A. Section includes administrative and procedural requirements necessary to prepare and process Applications for Payment.

1.3 DEFINITIONS

A. Schedule of Values: A statement furnished by Contractor allocating portions of the Contract Sum to various portions of the Work and used as the basis for reviewing Contractor's Applications for Payment.

1.4 SCHEDULE OF VALUES

A. Coordination: Coordinate preparation of the schedule of values with preparation of Contractor's construction schedule.

1. Coordinate line items in the schedule of values with other required administrative forms and schedules, including the following:

a. Application for Payment forms with continuation sheets.
b. Submittal schedule.
c. Items required to be indicated as separate activities in Contractor's construction schedule.

2. Submit the schedule of values to Engineer at earliest possible date, but no later than seven days before the date scheduled for submittal of initial Applications for Payment.
3. Subschedules for Phased Work: Where the Work is separated into phases requiring separately phased payments, provide subschedules showing values coordinated with each phase of payment.
4. Subschedules for Separate Elements of Work: Where the Contractor's construction schedule defines separate elements of the Work, provide subschedules showing values coordinated with each element.

B. Format and Content: Use Project Manual table of contents as a guide to establish line items for the schedule of values. Provide at least one line item for each Specification Section.

1. Identification: Include the following Project identification on the schedule of values:

a. Project name and location.

b. Name of Engineer.
c. Engineer's project number.
d. Contractor's name and address.
e. Date of submittal.

1. Schedule of Values shall be fully itemized by individual line items, with sufficient detail to clearly identify each portion of the Work and shall be subject to review and acceptance by the Owner. Arrange schedule of values consistent with format to Document AIA G703.
2. Arrange the schedule of values in tabular form with separate columns to indicate the following for each item listed:

    a. Related Specification Section or Division.
    b. Description of the Work.
    c. Name of subcontractor.
    d. Name of manufacturer or fabricator.
    e. Name of supplier.
    f. Change Orders (numbers) that affect value.
    g. Dollar value of the following, as a percentage of the Contract Sum to nearest one-hundredth percent, adjusted to total 100 percent.

        1) Labor.
        2) Materials.
        3) Equipment.

3. Provide a breakdown of the Contract Sum in enough detail to facilitate continued evaluation of Applications for Payment and progress reports. Coordinate with Project Manual table of contents. Provide multiple line items for principal subcontract amounts, where appropriate.
4. Round amounts to nearest whole dollar; total shall equal the Contract Sum.
5. Provide a separate line item in the schedule of values for each part of the Work where Applications for Payment may include materials or equipment purchased or fabricated and stored, but not yet installed.

    a. Differentiate between items stored on-site and items stored off-site. If required, include evidence of insurance.

6. Provide separate line items in the schedule of values for initial cost of materials, for each subsequent stage of completion, and for total installed value of that part of the Work.
7. Allowances: Provide a separate line item in the schedule of values for each allowance. Show line-item value of unit-cost allowances, as a product of the unit cost, multiplied by measured quantity. Use information indicated in the Contract Documents to determine quantities.
8. Each item in the schedule of values and Applications for Payment shall be complete. Include total cost and proportionate share of general overhead and profit for each item.

    a. Temporary facilities and other major cost items that are not direct cost of actual work-in-place may be shown either as separate line items in the schedule of values or distributed as general overhead expense, at Contractor's option.

9. Schedule Updating: Update and resubmit the schedule of values before the next Applications for Payment when Change Orders or Construction Change Directives result in a change in the Contract Sum.

1.5 APPLICATIONS FOR PAYMENT

A. Each Application for Payment following the initial Application for Payment shall be consistent with previous applications and payments as certified by Engineer and paid for by Owner.

1. Initial Application for Payment, Application for Payment at time of Substantial Completion, and final Application for Payment involve additional requirements.

B. Payment Application Times: The date for each progress payment shall be as per mutual agreement between Owner and Contractor. The period covered by each Application for Payment starts on the day following the end of the preceding period and ends 15 days before the date for each progress payment.

C. Application for Payment Forms: Use AIA Document G702 and AIA Document G703 as form for Applications for Payment.

D. Application Preparation: Complete every entry on form. Notarize and execute by a person authorized to sign legal documents on behalf of Contractor. Engineer will return incomplete applications without action.

1. Entries shall match data on the schedule of values and Contractor's construction schedule. Use updated schedules if revisions were made.
2. Include amounts for work completed following previous Application for Payment, whether or not payment has been received. Include only amounts for work completed at time of Application for Payment.
3. Include amounts of Change Orders and Construction Change Directives issued before last day of construction period covered by application.

E. Stored Materials: Include in Application for Payment amounts applied for materials or equipment purchased or fabricated and stored, but not yet installed. Differentiate between items stored on-site and items stored off-site.

1. Provide certificate of insurance, evidence of transfer of title to Owner, and consent of surety to payment, for stored materials.
2. Provide supporting documentation that verifies amount requested, such as paid invoices. Match amount requested with amounts indicated on documentation; do not include overhead and profit on stored materials.
3. Provide summary documentation for stored materials indicating the following:

    a. Value of materials previously stored and remaining stored as of date of previous Applications for Payment.
    b. Value of previously stored materials put in place after date of previous Application for Payment and on or before date of current Application for Payment.
    c. Value of materials stored since date of previous Application for Payment and remaining stored as of date of current Application for Payment.

F. Transmittal: Submit three signed and notarized original copies of each Application for Payment to Engineer by a method ensuring receipt. One copy shall include waivers of lien and similar attachments if required.

1. Transmit each copy with a transmittal form listing attachments and recording appropriate information about application.

G. Waivers of Mechanic's Lien: With each Application for Payment, submit waivers of mechanic's liens from subcontractors, sub-subcontractors, and suppliers for construction period covered by the previous application.

1. Submit partial waivers on each item for amount requested in previous application, after deduction for retainage, on each item.
2. When an application shows completion of an item, submit conditional final or full waivers.
3. Owner reserves the right to designate which entities involved in the Work must submit waivers.
4. Submit final Application for Payment with or preceded by conditional final waivers from every entity involved with performance of the Work covered by the application who is lawfully entitled to a lien.
5. Waiver Forms: Submit executed waivers of lien on forms, acceptable to Owner.

H. Initial Application for Payment: Administrative actions and submittals that must precede or coincide with submittal of first Application for Payment include the following:

1. List of subcontractors.
2. Schedule of values.
3. Contractor's construction schedule (preliminary if not final).
4. Products list (preliminary if not final).
5. Schedule of unit prices.
6. Submittal schedule (preliminary if not final).
7. Copies of building permits.
8. Copies of authorizations and licenses from authorities having jurisdiction for performance of the Work.
9. Certificates of insurance and insurance policies.
10. Performance and payment bonds.
11. Data needed to acquire Owner's insurance.

I. Application for Payment at Substantial Completion: After Engineer issues the Certificate of Substantial Completion, submit an Application for Payment showing 100 percent completion for portion of the Work claimed as substantially complete.

1. Include documentation supporting claim that the Work is substantially complete and a statement showing an accounting of changes to the Contract Sum.
2. This application shall reflect Certificate(s) of Substantial Completion issued previously for Owner occupancy of designated portions of the Work.

J. Final Payment Application: After completing Project closeout requirements, submit final Application for Payment with releases and supporting documentation not previously submitted and accepted, including, but not limited, to the following:

1. Evidence of completion of Project closeout requirements.
2. Insurance certificates for products and completed operations where required and proof that taxes, fees, and similar obligations were paid.
3. Updated final statement, accounting for final changes to the Contract Sum.
4. Contractor's Affidavit of Payment of Debts and Claims.
5. Contractor's Affidavit of Release of Liens.
6. Consent of Surety to Final Payment.
7. Evidence that claims have been settled.
8. Final liquidated damages settlement statement.

PART 2 - PRODUCTS (Not Used)

PART 3 - EXECUTION (Not Used)

END OF SECTION 012900

SECTION 013100 - PROJECT MANAGEMENT AND COORDINATION

PART 1 - GENERAL

1.1 RELATED DOCUMENTS

A. Drawings and general provisions of the Contract, including General and Supplementary Conditions and other Division 01 Specification Sections, apply to this Section.

1.2 SUMMARY

A. Section includes administrative provisions for coordinating construction operations on Project including, but not limited to, the following:

1. General coordination procedures.
2. Coordination drawings.
3. Requests for Information (RFIs).
4. Project meetings.

B. Each contractor shall participate in coordination requirements. Certain areas of responsibility are assigned to a specific contractor.

1.3 INFORMATIONAL SUBMITTALS

A. Subcontract List: Prepare a written summary identifying individuals or firms proposed for each portion of the Work, including those who are to furnish products or equipment fabricated to a special design. Include the following information in tabular form:

1. Name, address, and telephone number of entity performing subcontract or supplying products.
2. Number and title of related Specification Section(s) covered by subcontract.
3. Drawing number and detail references, as appropriate, covered by subcontract.

B. Key Personnel Names: Within 15 days of starting construction operations, submit a list of key personnel assignments, including superintendent and other personnel in attendance at Project site. Identify individuals and their duties and responsibilities; list addresses and telephone numbers, including home, office, and cellular telephone numbers and e-mail addresses. Provide names, addresses, and telephone numbers of individuals assigned as alternates in the absence of individuals assigned to Project.

1.4 GENERAL COORDINATION PROCEDURES

A. Coordination: Coordinate construction operations included in different Sections of the Specifications to ensure efficient and orderly installation of each part of the Work. Coordinate construction operations, included in different Sections, that depend on each other for proper installation, connection, and operation.

1. Schedule construction operations in sequence required to obtain the best results where installation of one part of the Work depends on installation of other components, before or after its own installation.
2. Coordinate installation of different components to ensure maximum performance and accessibility for required maintenance, service, and repair.
3. Make adequate provisions to accommodate items scheduled for later installation.

B. Prepare memoranda for distribution to each party involved, outlining special procedures required for coordination. Include such items as required notices, reports, and list of attendees at meetings.

1. Prepare similar memoranda for Owner and separate contractors if coordination of their Work is required.

C. Administrative Procedures: Coordinate scheduling and timing of required administrative procedures with other construction activities to avoid conflicts and to ensure orderly progress of the Work. Such administrative activities include, but are not limited to, the following:

1. Preparation of Contractor's construction schedule.
2. Preparation of the schedule of values.
3. Installation and removal of temporary facilities and controls.
4. Delivery and processing of submittals.
5. Progress meetings.
6. Preinstallation conferences.
7. Project closeout activities.
8. Startup and adjustment of systems.

D. Conservation: Coordinate construction activities to ensure that operations are carried out with consideration given to conservation of energy, water, and materials. Coordinate use of temporary utilities to minimize waste.

1. Salvage materials and equipment involved in performance of, but not actually incorporated into, the Work. See other Sections for disposition of salvaged materials that are designated as Owner's property.

1.5 COORDINATION DRAWINGS

A. Coordination Drawings, General: Prepare coordination drawings according to requirements in individual Sections, and additionally where installation is not completely shown on Shop Drawings, where limited space availability necessitates coordination, or if coordination is required to facilitate integration of products and materials fabricated or installed by more than one entity.

1. Content: Project-specific information, drawn accurately to a scale large enough to indicate and resolve conflicts. Do not base coordination drawings on standard printed data. Include the following information, as applicable:

a. Use applicable Drawings as a basis for preparation of coordination drawings. Prepare sections, elevations, and details as needed to describe relationship of various systems and components.

b. Coordinate the addition of trade-specific information to the coordination drawings by multiple contractors in a sequence that best provides for coordination of the information and resolution of conflicts between installed components before submitting for review.
c. Indicate functional and spatial relationships of components of Engineerural, structural, civil, mechanical, and electrical systems.
d. Indicate space requirements for routine maintenance and for anticipated replacement of components during the life of the installation.
e. Show location and size of access doors required for access to concealed dampers, valves, and other controls.
f. Indicate required installation sequences.
g. Indicate dimensions shown on the Drawings. Specifically note dimensions that appear to be in conflict with submitted equipment and minimum clearance requirements. Provide alternate sketches to Engineer indicating proposed resolution of such conflicts. Minor dimension changes and difficult installations will not be considered changes to the Contract.

B. Coordination Drawing Organization: Organize coordination drawings as follows:

1. Floor Plans and Reflected Ceiling Plans: Show Engineerural and structural elements, and mechanical, plumbing, fire-protection, fire-alarm, and electrical Work. Show locations of visible ceiling-mounted devices relative to acoustical ceiling grid. Supplement plan drawings with section drawings where required to adequately represent the Work.
2. Plenum Space: Indicate subframing for support of ceiling and wall systems, mechanical and electrical equipment, and related Work. Locate components within ceiling plenum to accommodate layout of light fixtures indicated on Drawings. Indicate areas of conflict between light fixtures and other components.
3. Mechanical Rooms: Provide coordination drawings for mechanical rooms showing plans and elevations of mechanical, plumbing, fire-protection, fire-alarm, and electrical equipment.
4. Structural Penetrations: Indicate penetrations and openings required for all disciplines.
5. Slab Edge and Embedded Items: Indicate slab edge locations and sizes and locations of embedded items for metal fabrications, sleeves, anchor bolts, bearing plates, angles, door floor closers, slab depressions for floor finishes, curbs and housekeeping pads, and similar items.
6. Mechanical and Plumbing Work: Show the following:

    a. Sizes and bottom elevations of ductwork, piping, and conduit runs, including insulation, bracing, flanges, and support systems.
    b. Dimensions of major components, such as dampers, valves, diffusers, access doors, cleanouts and electrical distribution equipment.
    c. Fire-rated enclosures around ductwork.

7. Electrical Work: Show the following:

    a. Runs of vertical and horizontal conduit 1-1/4 inches in diameter and larger.
    b. Light fixture, exit light, emergency battery pack, smoke detector, and other fire-alarm locations.
    c. Panel board, switch board, switchgear, transformer, busway, generator, and motor control center locations.
    d. Location of pull boxes and junction boxes, dimensioned from column center lines.

8. Fire-Protection System: Show the following:

    a. Locations of standpipes, mains piping, branch lines, pipe drops, and sprinkler heads.

9. Review: Engineer will review coordination drawings to confirm that the Work is being coordinated, but not for the details of the coordination, which are Contractor's responsibility. If Engineer determines that coordination drawings are not being prepared in sufficient scope or detail, or are otherwise deficient, Engineer will so inform Contractor, who shall make changes as directed and resubmit.
10. Coordination Drawing Prints: Prepare coordination drawing prints according to requirements in Section 013300 "Submittal Procedures."

1.6 REQUESTS FOR INFORMATION (RFIs)

A. General: Immediately on discovery of the need for additional information or interpretation of the Contract Documents, Contractor shall prepare and submit an RFI in the form specified.

1. Engineer will return RFIs submitted to Engineer by other entities controlled by Contractor with no response.
2. Coordinate and submit RFIs in a prompt manner so as to avoid delays in Contractor's work or work of subcontractors.

B. Content of the RFI: Include a detailed, legible description of item needing information or interpretation.

1.7 PROJECT MEETINGS

A. General: Schedule and conduct meetings and conferences at Project site unless otherwise indicated.

1. Attendees: Inform participants and others involved, and individuals whose presence is required, of date and time of each meeting. Notify Owner and Engineer of scheduled meeting dates and times.
2. Agenda: Prepare the meeting agenda. Distribute the agenda to all invited attendees.
3. Minutes: Entity responsible for conducting meeting will record significant discussions and agreements achieved. Distribute the meeting minutes to everyone concerned, including Owner and Engineer, within three days of the meeting.

B. Preconstruction Conference: **Schedule and conduct** a preconstruction conference before starting construction, at a time convenient to Owner and Engineer, but no later than **15** days after execution of the Agreement.

1. Conduct the conference to review responsibilities and personnel assignments.
2. Attendees: Authorized representatives of Owner, Engineer, and their consultants; Contractor and its superintendent; major subcontractors; suppliers; and other concerned parties shall attend the conference. Participants at the conference shall be familiar with Project and authorized to conclude matters relating to the Work.
3. Agenda: Discuss items of significance that could affect progress, including the following:

a. Tentative construction schedule.
b. Phasing.
c. Critical work sequencing and long-lead items.
d. Designation of key personnel and their duties.
e. Lines of communications.
f. Procedures for processing field decisions and Change Orders.
g. Procedures for RFIs.
h. Procedures for testing and inspecting.
i. Procedures for processing Applications for Payment.
j. Distribution of the Contract Documents.
k. Submittal procedures.
l. Preparation of record documents.
m. Use of the premises and existing building.
n. Work restrictions.
o. Working hours.
p. Owner's occupancy requirements.
q. Responsibility for temporary facilities and controls.
r. Procedures for moisture and mold control.
s. Procedures for disruptions and shutdowns.
t. Construction waste management and recycling.
u. Parking availability.
v. Office, work, and storage areas.
w. Equipment deliveries and priorities.
x. First aid.
y. Security.
z. Progress cleaning.

4. Minutes: Entity responsible for conducting meeting will record and distribute meeting minutes.

C. Preinstallation Conferences: Conduct a preinstallation conference at Project site before each construction activity that requires coordination with other construction.

1. Record significant conference discussions, agreements, and disagreements, including required corrective measures and actions.
2. Reporting: Distribute minutes of the meeting to each party present and to other parties requiring information.
3. Do not proceed with installation if the conference cannot be successfully concluded. Initiate whatever actions are necessary to resolve impediments to performance of the Work and reconvene the conference at earliest feasible date.

D. Project Closeout Conference: Schedule and conduct a project closeout conference, at a time convenient to Owner and Engineer, but no later than 30 days prior to the scheduled date of Substantial Completion.

1. Conduct the conference to review requirements and responsibilities related to Project closeout.
2. Agenda: Discuss items of significance that could affect or delay Project closeout, including the following:

a. Preparation of record documents.

b. Procedures required prior to inspection for Substantial Completion and for final inspection for acceptance.
c. Submittal of written warranties.
d. Requirements for preparing operations and maintenance data.
e. Requirements for delivery of material samples, attic stock, and spare parts.
f. Requirements for demonstration and training.
g. Preparation of Contractor's punch list.
h. Procedures for processing Applications for Payment at Substantial Completion and for final payment.
i. Submittal procedures.
j. Coordination of separate contracts.
k. Owner's partial occupancy requirements.
l. Installation of Owner's furniture, fixtures, and equipment.
m. Responsibility for removing temporary facilities and controls.

3. Minutes: Entity conducting meeting will record and distribute meeting minutes.

E. Progress Meetings: Conduct progress meetings at regular intervals.

1. Coordinate dates of meetings with preparation of payment requests.
2. Agenda: Review and correct or approve minutes of previous progress meeting. Review other items of significance that could affect progress. Include topics for discussion as appropriate to status of Project.

a. Contractor's Construction Schedule: Review progress since the last meeting. Determine whether each activity is on time, ahead of schedule, or behind schedule, in relation to Contractor's construction schedule. Determine how construction behind schedule will be expedited; secure commitments from parties involved to do so. Discuss whether schedule revisions are required to ensure that current and subsequent activities will be completed within the Contract Time.

1) Review schedule for next period.

b. Review present and future needs of each entity present, including the following:

1) Interface requirements.
2) Sequence of operations.
3) Resolution of BIM component conflicts.
4) Status of submittals.
5) Deliveries.
6) Off-site fabrication.
7) Access.
8) Site utilization.
9) Temporary facilities and controls.
10) Progress cleaning.
11) Quality and work standards.
12) Status of correction of deficient items.
13) Field observations.
14) Status of RFIs.
15) Status of proposal requests.
16) Pending changes.

17) Status of Change Orders.
18) Pending claims and disputes.
19) Documentation of information for payment requests.

3. Minutes: Entity responsible for conducting the meeting will record and distribute the meeting minutes to each party present and to parties requiring information.

   a. Schedule Updating: Revise Contractor's construction schedule after each progress meeting where revisions to the schedule have been made or recognized. Issue revised schedule concurrently with the report of each meeting.

PART 2 - PRODUCTS (Not Used)

PART 3 - EXECUTION (Not Used)

END OF SECTION 013100

SECTION 013200 - SELECTIVE DEMOLITION

PART 1 - GENERAL

1.1 RELATED DOCUMENTS

A. Drawings and general provisions of the Contract, including General and Supplementary Conditions and Division 01 Specification Sections, apply to this Section.

1.2 SUMMARY

A. Section Includes:

1. Demolition and removal of selected portions of building or structure.
2. Demolition and removal of selected site elements.
3. Salvage of existing items to be reused or recycled.

1.3 DEFINITIONS

A. Remove: Detach items from existing construction and dispose of them off-site unless indicated to be salvaged or reinstalled.

B. Remove and Salvage: Detach items from existing construction, in a manner to prevent damage, and deliver to Owner ready for reuse.

C. Remove and Reinstall: Detach items from existing construction, in a manner to prevent damage, prepare for reuse, and reinstall where indicated.

D. Existing to Remain: Leave existing items that are not to be removed and that are not otherwise indicated to be salvaged or reinstalled.

E. Dismantle: To remove by disassembling or detaching an item from a surface, using gentle methods and equipment to prevent damage to the item and surfaces; disposing of items unless indicated to be salvaged or reinstalled.

1.4 MATERIALS OWNERSHIP

A. Unless otherwise indicated, demolition waste becomes property of Contractor.

B. Historic items, relics, antiques, and similar objects including, but not limited to, cornerstones and their contents, commemorative plaques and tablets, and other items of interest or value to Owner that may be uncovered during demolition remain the property of Owner.

1. Carefully salvage in a manner to prevent damage and promptly return to Owner.

1.5 PREINSTALLATION MEETINGS

A. Predemolition Conference: Conduct conference at Project site.

1. Inspect and discuss condition of construction to be selectively demolished.
2. Review structural load limitations of existing structure.
3. Review and finalize selective demolition schedule and verify availability of materials, demolition personnel, equipment, and facilities needed to make progress and avoid delays.
4. Review requirements of work performed by other trades that rely on substrates exposed by selective demolition operations.
5. Review areas where existing construction is to remain and requires protection.

1.6 INFORMATIONAL SUBMITTALS

A. Qualification Data: For refrigerant recovery technician.

B. Proposed Protection Measures: Submit report, including Drawings, that indicates the measures proposed for protecting individuals and property, for environmental protection , for dust control and , for noise control. Indicate proposed locations and construction of barriers.

C. Schedule of Selective Demolition Activities: Indicate the following:

1. Detailed sequence of selective demolition and removal work, with starting and ending dates for each activity. Ensure Owner's building manager's and other tenants' on-site operations are uninterrupted.
2. Interruption of utility services. Indicate how long utility services will be interrupted.
3. Coordination for shutoff, capping, and continuation of utility services.
4. Use of elevator and stairs.
5. Coordination of Owner's continuing occupancy of portions of existing building and of Owner's partial occupancy of completed Work.

D. Predemolition Photographs or Video: Show existing conditions of adjoining construction, including finish surfaces, that might be misconstrued as damage caused by demolition operations.

E. Statement of Refrigerant Recovery: Signed by refrigerant recovery technician responsible for recovering refrigerant, stating that all refrigerant that was present was recovered and that recovery was performed according to EPA regulations. Include name and address of technician and date refrigerant was recovered.

F. Warranties: Documentation indicating that existing warranties are still in effect after completion of selective demolition.

1.7 CLOSEOUT SUBMITTALS

A. Inventory: Submit a list of items that have been removed and salvaged.

1.8 QUALITY ASSURANCE

A. Refrigerant Recovery Technician Qualifications: Certified by an EPA-approved certification program.

1.9 FIELD CONDITIONS

A. Owner will occupy portions of building immediately adjacent to selective demolition area. Conduct selective demolition so Owner's operations will not be disrupted.

B. Conditions existing at time of inspection for bidding purpose will be maintained by Owner as far as practical.

C. Notify Engineer of discrepancies between existing conditions and Drawings before proceeding with selective demolition.

D. Hazardous Materials: It is not expected that hazardous materials will be encountered in the Work.

1. Hazardous materials will be removed by Owner before start of the Work.
2. If suspected hazardous materials are encountered, do not disturb; immediately notify Engineer and Owner. Hazardous materials will be removed by Owner under a separate contract.

E. Historic Areas: Demolition and hauling equipment and other materials shall be of sizes that clear surfaces within historic spaces, areas, rooms, and openings, including temporary protection.

F. Storage or sale of removed items or materials on-site is not permitted.

G. Utility Service: Maintain existing utilities indicated to remain in service and protect them against damage during selective demolition operations.

1. Maintain fire-protection facilities in service during selective demolition operations.

1.10 WARRANTY

A. Existing Warranties: Remove, replace, patch, and repair materials and surfaces cut or damaged during selective demolition, by methods and with materials and using approved contractors so as not to void existing warranties. Notify warrantor before proceeding. Existing warranties include the following:
   a. Roofing.
   b. Firestopping.

B. Notify warrantor on completion of selective demolition, and obtain documentation verifying that existing system has been inspected and warranty remains in effect. Submit documentation at Project closeout.

1.11 COORDINATION

A. Arrange selective demolition schedule so as not to interfere with Owner's operations.

PART 2 - PRODUCTS

2.1 PERFORMANCE REQUIREMENTS

A. Regulatory Requirements: Comply with governing EPA notification regulations before beginning selective demolition. Comply with hauling and disposal regulations of authorities having jurisdiction.

B. Standards: Comply with ASSE A10.6 and NFPA 241.

PART 3 - EXECUTION

3.1 EXAMINATION

A. Verify that utilities have been disconnected and capped before starting selective demolition operations.

B. Review Project Record Documents of existing construction or other existing condition and hazardous material information provided by Owner. Owner does not guarantee that existing conditions are same as those indicated in Project Record Documents.

C. Engage a professional engineer to perform an engineering survey of condition of building to determine whether removing any element might result in structural deficiency or unplanned collapse of any portion of structure or adjacent structures during selective building demolition operations.

1. Perform surveys as the Work progresses to detect hazards resulting from selective demolition activities.

D. Steel Tendons: Locate tensioned steel tendons and include recommendations for de-tensioning.

E. Verify that hazardous materials have been remediated before proceeding with building demolition operations.

F. Survey of Existing Conditions: Record existing conditions by use of preconstruction photographs or video.

1. Comply with requirements specified in Section 013233 "Photographic Documentation."
2. Inventory and record the condition of items to be removed and salvaged. Provide photographs or video of conditions that might be misconstrued as damage caused by salvage operations.
3. Before selective demolition or removal of existing building elements that will be reproduced or duplicated in final Work, make permanent record of measurements, materials, and construction details required to make exact reproduction.

3.2 PREPARATION

A. Refrigerant: Before starting demolition, remove refrigerant from mechanical equipment according to 40 CFR 82 and regulations of authorities having jurisdiction.

3.3 UTILITY SERVICES AND MECHANICAL/ELECTRICAL SYSTEMS

A. Existing Services/Systems to Remain: Maintain services/systems indicated to remain and protect them against damage.

B. Existing Services/Systems to Be Removed, Relocated, or Abandoned: Locate, identify, disconnect, and seal or cap off utility services and mechanical/electrical systems serving areas to be selectively demolished.
   1. Arrange to shut off utilities with utility companies.
   2. If services/systems are required to be removed, relocated, or abandoned, provide temporary services/systems that bypass area of selective demolition and that maintain continuity of services/systems to other parts of building.
   3. Disconnect, demolish, and remove fire-suppression systems, plumbing, and HVAC systems, equipment, and components indicated on Drawings to be removed.

      a. Piping to Be Removed: Remove portion of piping indicated to be removed and cap or plug remaining piping with same or compatible piping material.
      b. Piping to Be Abandoned in Place: Drain piping and cap or plug piping with same or compatible piping material and leave in place.
      c. Equipment to Be Removed: Disconnect and cap services and remove equipment.
      d. Equipment to Be Removed and Reinstalled: Disconnect and cap services and remove, clean, and store equipment; when appropriate, reinstall, reconnect, and make equipment operational.
      e. Equipment to Be Removed and Salvaged: Disconnect and cap services and remove equipment and deliver to Owner.
      f. Ducts to Be Removed: Remove portion of ducts indicated to be removed and plug remaining ducts with same or compatible ductwork material.
      g. Ducts to Be Abandoned in Place: Cap or plug ducts with same or compatible ductwork material and leave in place.

3.4 PROTECTION

A. Temporary Protection: Provide temporary barricades and other protection required to prevent injury to people and damage to adjacent buildings and facilities to remain.

   1. Provide protection to ensure safe passage of people around selective demolition area and to and from occupied portions of building.
   2. Provide temporary weather protection, during interval between selective demolition of existing construction on exterior surfaces and new construction, to prevent water leakage and damage to structure and interior areas.
   3. Protect walls, ceilings, floors, and other existing finish work that are to remain or that are exposed during selective demolition operations.
   4. Cover and protect furniture, furnishings, and equipment that have not been removed.
   5. Comply with requirements for temporary enclosures, dust control, heating, and cooling.

B. Temporary Shoring: Design, provide, and maintain shoring, bracing, and structural supports as required to preserve stability and prevent movement, settlement, or collapse of construction and finishes to remain, and to prevent unexpected or uncontrolled movement or collapse of construction being demolished.

1. Strengthen or add new supports when required during progress of selective demolition.

C. Remove temporary barricades and protections where hazards no longer exist.

3.5 SELECTIVE DEMOLITION, GENERAL

A. General: Demolish and remove existing construction only to the extent required by new construction and as indicated. Use methods required to complete the Work within limitations of governing regulations and as follows:

1. Proceed with selective demolition systematically, from higher to lower level. Complete selective demolition operations above each floor or tier before disturbing supporting members on the next lower level.
2. Neatly cut openings and holes plumb, square, and true to dimensions required. Use cutting methods least likely to damage construction to remain or adjoining construction. Use hand tools or small power tools designed for sawing or grinding, not hammering and chopping. Temporarily cover openings to remain.
3. Cut or drill from the exposed or finished side into concealed surfaces to avoid marring existing finished surfaces.
4. Do not use cutting torches until work area is cleared of flammable materials. At concealed spaces, such as duct and pipe interiors, verify condition and contents of hidden space before starting flame-cutting operations. Maintain portable fire-suppression devices during flame-cutting operations.
5. Maintain fire watch during and after flame-cutting operations.
6. Maintain adequate ventilation when using cutting torches.
7. Remove decayed, vermin-infested, or otherwise dangerous or unsuitable materials and promptly dispose of off-site.
8. Remove structural framing members and lower to ground by method suitable to avoid free fall and to prevent ground impact or dust generation.
9. Locate selective demolition equipment and remove debris and materials so as not to impose excessive loads on supporting walls, floors, or framing.
10. Dispose of demolished items and materials promptly.

B. Site Access and Temporary Controls: Conduct selective demolition and debris-removal operations to ensure minimum interference with roads, streets, walks, walkways, and other adjacent occupied and used facilities.

C. Work in Historic Areas: Selective demolition may be performed only in areas of Project that are not designated as historic. In historic spaces, areas, and rooms, or on historic surfaces, the terms "demolish" or "remove" shall mean historic "removal" or "dismantling" as specified in Section 024296 "Historic Removal and Dismantling."

D. Removed and Salvaged Items:

1. Clean salvaged items.

2. Pack or crate items after cleaning. Identify contents of containers.
3. Store items in a secure area until delivery to Owner.
4. Transport items to Owner's storage area designated by Owner.
5. Protect items from damage during transport and storage.

E. Removed and Reinstalled Items:

1. Clean and repair items to functional condition adequate for intended reuse.
2. Pack or crate items after cleaning and repairing. Identify contents of containers.
3. Protect items from damage during transport and storage.
4. Reinstall items in locations indicated. Comply with installation requirements for new materials and equipment. Provide connections, supports, and miscellaneous materials necessary to make item functional for use indicated.

F. Existing Items to Remain: Protect construction indicated to remain against damage and soiling during selective demolition. When permitted by Engineer, items may be removed to a suitable, protected storage location during selective demolition and cleaned and reinstalled in their original locations after selective demolition operations are complete.

3.6 SELECTIVE DEMOLITION PROCEDURES FOR SPECIFIC MATERIALS

A. Concrete: Demolish in small sections. Using power-driven saw, cut concrete to a depth of at least 3/4 inch at junctures with construction to remain. Dislodge concrete from reinforcement at perimeter of areas being demolished, cut reinforcement, and then remove remainder of concrete. Neatly trim openings to dimensions indicated.

B. Concrete: Demolish in sections. Cut concrete full depth at junctures with construction to remain and at regular intervals using power-driven saw, and then remove concrete between saw cuts.

C. Masonry: Demolish in small sections. Cut masonry at junctures with construction to remain, using power-driven saw, and then remove masonry between saw cuts.

D. Concrete Slabs-on-Grade: Saw-cut perimeter of area to be demolished, and then break up and remove.

E. Resilient Floor Coverings: Remove floor coverings and adhesive according to recommendations in RFCI's "Recommended Work Practices for the Removal of Resilient Floor Coverings." Do not use methods requiring solvent-based adhesive strippers.

F. Roofing: Remove no more existing roofing than what can be covered in one day by new roofing and so that building interior remains watertight and weathertight.

1. Remove existing roof membrane, flashings, copings, and roof accessories.
2. Remove existing roofing system down to substrate.

3.7 DISPOSAL OF DEMOLISHED MATERIALS

A. Remove demolition waste materials from Project site and dispose of them in an EPA-approved construction and demolition waste landfill acceptable to authorities having jurisdiction.

1. Do not allow demolished materials to accumulate on-site.
2. Remove and transport debris in a manner that will prevent spillage on adjacent surfaces and areas.
3. Remove debris from elevated portions of building by chute, hoist, or other device that will convey debris to grade level in a controlled descent.
4. Comply with requirements specified in Section 017419 "Construction Waste Management and Disposal."

B. Burning: Do not burn demolished materials.

3.8 CLEANING

A. Clean adjacent structures and improvements of dust, dirt, and debris caused by selective demolition operations. Return adjacent areas to condition existing before selective demolition operations began.

END OF SECTION 017320

SECTION 013300 - SUBMITTAL PROCEDURES

PART 1 - GENERAL

1.1 RELATED DOCUMENTS

A. Drawings and general provisions of the Contract, including General and Supplementary Conditions and other Division 01 Specification Sections, apply to this Section.

1.2 SUMMARY

A. Section includes requirements for the submittal schedule and administrative and procedural requirements for submitting Shop Drawings, Product Data, Samples, and other submittals.

1.3 DEFINITIONS

A. Action Submittals: Written and graphic information and physical samples that require Engineer's responsive action. Action submittals are those submittals indicated in individual Specification Sections as "action submittals."

B. Informational Submittals: Written and graphic information and physical samples that do not require Engineer's responsive action. Submittals may be rejected for not complying with requirements. Informational submittals are those submittals indicated in individual Specification Sections as "informational submittals."

1.4 ACTION SUBMITTALS

A. Submittal Schedule: Submit a schedule of submittals, arranged in chronological order by dates required by construction schedule. Include time required for review, ordering, manufacturing, fabrication, and delivery when establishing dates. Include additional time required for making corrections or revisions to submittals noted by Engineer and additional time for handling and reviewing submittals required by those corrections.

1.5 SUBMITTAL ADMINISTRATIVE REQUIREMENTS

A. Engineer's Digital Data Files: Electronic digital data files of the Contract Drawings will be provided by Engineer for Contractor's use in preparing submittals.

B. Coordination: Coordinate preparation and processing of submittals with performance of construction activities.

1. Coordinate each submittal with fabrication, purchasing, testing, delivery, other submittals, and related activities that require sequential activity.
2. Submit all submittal items required for each Specification Section concurrently unless partial submittals for portions of the Work are indicated on approved submittal schedule.

a. Engineer reserves the right to withhold action on a submittal requiring coordination with other submittals until related submittals are received.

C. Processing Time: Allow time for submittal review, including time for resubmittals, as follows. Time for review shall commence on Engineer's receipt of submittal. No extension of the Contract Time will be authorized because of failure to transmit submittals enough in advance of the Work to permit processing, including resubmittals.

1. Initial Review: Allow 8 days for initial review of each submittal. Allow additional time if coordination with subsequent submittals is required. Engineer will advise Contractor when a submittal being processed must be delayed for coordination.

D. Paper Submittals: Place a permanent label or title block on each submittal item for identification.

1. Indicate name of firm or entity that prepared each submittal on label or title block.
2. Include the following information for processing and recording action taken:

a. Project name.
b. Date.
c. Name of Engineer.
d. Name of Contractor.
e. Name of subcontractor.
f. Name of supplier.
g. Name of manufacturer.
h. Submittal number or other unique identifier, including revision identifier.

1) Submittal number shall use Specification Section number followed by a decimal point and then a sequential number (e.g., 061000.01). Resubmittals shall include an alphabetic suffix after another decimal point (e.g., 061000.01.A).

i. Number and title of appropriate Specification Section.
j. Drawing number and detail references, as appropriate.
k. Location(s) where product is to be installed, as appropriate.
l. Other necessary identification.
m. Deviations: Highlight, encircle, or otherwise identify deviations from the Contract Documents on submittals.

3. Transmittal for Paper Submittals: Assemble each submittal individually and appropriately for transmittal and handling. Transmit each submittal using a transmittal form. Engineer will discard submittals received from sources other than Contractor.

E. Electronic Submittals: Identify and incorporate information in each electronic submittal file as follows:

1. Assemble complete submittal package into a single indexed file incorporating submittal requirements of a single Specification Section and transmittal form with links enabling navigation to each item.
2. Name file with submittal number or other unique identifier, including revision identifier.

a. File name shall use project identifier and Specification Section number followed by a decimal point and then a sequential number (e.g., LNHS-061000.01). Resubmittals shall include an alphabetic suffix after another decimal point (e.g., LNHS-061000.01.A).

3. Provide means for insertion to permanently record Contractor's review and approval markings and action taken by Engineer.
4. Transmittal Form for Electronic Submittals: Use electronic form acceptable to Owner, containing the following information:

a. Project name.
b. Date.
c. Name and address of Engineer.
d. Name of Construction Manager.
e. Name of Contractor.
f. Name of firm or entity that prepared submittal.
g. Names of subcontractor, manufacturer, and supplier.
h. Category and type of submittal.
i. Submittal purpose and description.
j. Specification Section number and title.
k. Specification paragraph number or drawing designation and generic name for each of multiple items.
l. Drawing number and detail references, as appropriate.
m. Location(s) where product is to be installed, as appropriate.
n. Related physical samples submitted directly.
o. Indication of full or partial submittal.
p. Transmittal number, numbered consecutively.
q. Submittal and transmittal distribution record.
r. Other necessary identification.
s. Remarks.

5. Metadata: Include the following information as keywords in the electronic submittal file metadata:

a. Project name.
b. Number and title of appropriate Specification Section.
c. Manufacturer name.
d. Product name.

F. Options: Identify options requiring selection by Engineer.

G. Deviations and Additional Information: On an attached separate sheet, prepared on Contractor's letterhead, record relevant information, requests for data, revisions other than those requested by Engineer on previous submittals, and deviations from requirements in the Contract Documents, including minor variations and limitations. Include same identification information as related submittal.

H. Resubmittals: Make resubmittals in same form and number of copies as initial submittal.

1. Note date and content of previous submittal.

2. Note date and content of revision in label or title block and clearly indicate extent of revision.
3. Resubmit submittals until they are marked with approval notation from Engineer's action stamp.

I. Distribution: Furnish copies of final submittals to manufacturers, subcontractors, suppliers, fabricators, installers, authorities having jurisdiction, and others as necessary for performance of construction activities. Show distribution on transmittal forms.

J. Use for Construction: Retain complete copies of submittals on Project site. Use only final action submittals that are marked with approval notation from Engineer's action stamp.

PART 2 - PRODUCTS

2.1 SUBMITTAL PROCEDURES

A. General Submittal Procedure Requirements: Prepare and submit submittals required by individual Specification Sections. Types of submittals are indicated in individual Specification Sections.

1. Submit electronic submittals via email as PDF electronic files.

2. Submittals: Submit 3 paper copies of each submittal unless otherwise indicated. Engineer will return 2 copies.
3. Certificates and Certifications Submittals: Provide a statement that includes signature of entity responsible for preparing certification. Certificates and certifications shall be signed by an officer or other individual authorized to sign documents on behalf of that entity.

    a. Provide a digital signature with digital certificate on electronically submitted certificates and certifications where indicated.

B. Product Data: Collect information into a single submittal for each element of construction and type of product or equipment.

1. If information must be specially prepared for submittal because standard published data are not suitable for use, submit as Shop Drawings, not as Product Data.
2. Mark each copy of each submittal to show which products and options are applicable.
3. Include the following information, as applicable:

    a. Manufacturer's catalog cuts.
    b. Manufacturer's product specifications.
    c. Standard color charts.
    d. Statement of compliance with specified referenced standards.
    e. Testing by recognized testing agency.
    f. Application of testing agency labels and seals.
    g. Notation of coordination requirements.
    h. Availability and delivery time information.

4. For equipment, include the following in addition to the above, as applicable:

    a. Wiring diagrams showing factory-installed wiring.
    b. Printed performance curves.
    c. Operational range diagrams.
    d. Clearances required to other construction, if not indicated on accompanying Shop Drawings.

5. Submit Product Data before or concurrent with Samples.
6. Submit Product Data in the following format:

    a. PDF electronic file.
    b. Or 3 paper copies of Product Data unless otherwise indicated. Engineer will return 2 copies.

C. Shop Drawings: Prepare Project-specific information, drawn accurately to scale. Do not base Shop Drawings on reproductions of the Contract Documents or standard printed data.

1. Preparation: Fully illustrate requirements in the Contract Documents. Include the following information, as applicable:

    a. Identification of products.
    b. Schedules.
    c. Compliance with specified standards.
    d. Notation of coordination requirements.
    e. Notation of dimensions established by field measurement.
    f. Relationship and attachment to adjoining construction clearly indicated.
    g. Seal and signature of professional engineer if specified.
2. Submit Shop Drawings in the following format:

    a. PDF electronic file.
    b. Or 3 opaque (bond) copies of each submittal.

2.2 DELEGATED-DESIGN SERVICES

A. Performance and Design Criteria: Where professional design services or certifications by a design professional are specifically required of Contractor by the Contract Documents, provide products and systems complying with specific performance and design criteria indicated.

1. If criteria indicated are not sufficient to perform services or certification required, submit a written request for additional information to Engineer.

B. Delegated-Design Services Certification: In addition to Shop Drawings, Product Data, and other required submittals, submit digitally signed PDF electronic file and three paper copies of certificate, signed and sealed by the responsible design professional, for each product and system specifically assigned to Contractor to be designed or certified by a design professional.

1. Indicate that products and systems comply with performance and design criteria in the Contract Documents. Include list of codes, loads, and other factors used in performing these services.

PART 3 - EXECUTION

3.1 CONTRACTOR'S REVIEW

A. Action and Informational Submittals: Review each submittal and check for coordination with other Work of the Contract and for compliance with the Contract Documents. Note corrections and field dimensions. Mark with approval stamp before submitting to Engineer.

B. Project Closeout and Maintenance Material Submittals: See requirements in Section 017700 "Closeout Procedures."

C. Approval Stamp: Stamp each submittal with a uniform, approval stamp. Include Project name and location, submittal number, Specification Section title and number, name of reviewer, date of Contractor's approval, and statement certifying that submittal has been reviewed, checked, and approved for compliance with the Contract Documents.

3.2 ENGINEER'S ACTION

A. Submittals: Engineer will review each submittal, make marks to indicate corrections or revisions required, and return it. Engineer will stamp each submittal with an action stamp and will mark stamp appropriately to indicate action.

B. Partial submittals prepared for a portion of the Work will be reviewed when use of partial submittals has received prior approval from Engineer.

C. Incomplete submittals are unacceptable, will be considered nonresponsive, and will be returned for resubmittal without review.

D. Submittals not required by the Contract Documents may be returned by the Engineer without action.

END OF SECTION 013300

SECTION 014200 - REFERENCES

PART 1 - GENERAL

1.1 RELATED DOCUMENTS

A. Drawings and general provisions of the Contract, including General and Supplementary Conditions and other Division 01 Specification Sections, apply to this Section.

1.2 DEFINITIONS

A. General: Basic Contract definitions are included in the Conditions of the Contract.

B. "Approved": When used to convey Architect's action on Contractor's submittals, applications, and requests, "approved" is limited to Architect's duties and responsibilities as stated in the Conditions of the Contract.

C. "Directed": A command or instruction by Engineer. Other terms including "requested," "authorized," "selected," "required," and "permitted" have the same meaning as "directed."

D. "Indicated": Requirements expressed by graphic representations or in written form on Drawings, in Specifications, and in other Contract Documents. Other terms including "shown," "noted," "scheduled," and "specified" have the same meaning as "indicated."

E. "Regulations": Laws, ordinances, statutes, and lawful orders issued by authorities having jurisdiction, and rules, conventions, and agreements within the construction industry that control performance of the Work.

F. "Furnish": Supply and deliver to Project site, ready for unloading, unpacking, assembly, installation, and similar operations.

G. "Install": Unload, temporarily store, unpack, assemble, erect, place, anchor, apply, work to dimension, finish, cure, protect, clean, and similar operations at Project site.

H. "Provide": Furnish and install, complete and ready for the intended use.

I. "Project Site": Space available for performing construction activities. The extent of Project site is shown on Drawings and may or may not be identical with the description of the land on which Project is to be built.

J. "Installer": An installer is the Contractor or another entity engaged by Contractor as an employee, Subcontractor, or Sub-subcontractor, to perform a particular construction operation, including installation, erection, application, and similar operations.

K. The term "experienced," when used with an entity, means having successfully completed a minimum of **five** previous projects similar in size and scope to this Project; being familiar with special requirements indicated; and having complied with requirements of authorities having jurisdiction.

1.3 INDUSTRY STANDARDS

A. Applicability of Standards: Unless the Contract Documents include more stringent requirements, applicable construction industry standards have the same force and effect as if bound or copied directly into the Contract Documents to the extent referenced. Such standards are made a part of the Contract Documents by reference.

B. Publication Dates: Comply with standards in effect as of date of the Contract Documents unless otherwise indicated.

C. Conflicting Requirements: If compliance with two or more standards is specified and the standards establish different or conflicting requirements for minimum quantities or quality levels, comply with the most stringent requirement. Refer uncertainties and requirements that are different, but apparently equal, to Engineer for a decision before proceeding.

1. Minimum Quantity or Quality Levels: The quantity or quality level shown or specified shall be the minimum provided or performed. The actual installation may comply exactly with the minimum quantity or quality specified, or it may exceed the minimum within reasonable limits. To comply with these requirements, indicated numeric values are minimum or maximum, as appropriate, for the context of requirements. Refer uncertainties to Engineer for a decision before proceeding.

D. Copies of Standards: Each entity engaged in construction on Project should be familiar with industry standards applicable to its construction activity. Copies of applicable standards are not bound with the Contract Documents.

1. Where copies of standards are needed to perform a required construction activity, obtain copies directly from publication source.

1.4 ABBREVIATIONS AND ACRONYMS

A. Industry Organizations: Where abbreviations and acronyms are used in Specifications or other Contract Documents, they shall mean the recognized name of the entities indicated in Gale's "Encyclopedia of Associations: National Organizations of the U.S." or in Columbia Books' "National Trade & Professional Associations of the United States."

B. Code Agencies: Where abbreviations and acronyms are used in Specifications or other Contract Documents, they shall mean the recognized name of the entities in the following list. This information is believed to be accurate as of the date of the Contract Documents.

1. DIN - Deutsches Institut fur Normung e.V.; www.din.de.
2. IAPMO - International Association of Plumbing and Mechanical Officials; www.iapmo.org.
3. ICC - International Code Council; www.iccsafe.org.
4. ICC-ES - ICC Evaluation Service, LLC; www.icc-es.org.

C. Federal Government Agencies: Where abbreviations and acronyms are used in Specifications or other Contract Documents, they shall mean the recognized name of the entities in the following list. Information is subject to change and is up to date as of the date of the Contract Documents.

1. COE - Army Corps of Engineers; www.usace.army.mil.
2. CPSC - Consumer Product Safety Commission; www.cpsc.gov.
3. DOC - Department of Commerce; National Institute of Standards and Technology; www.nist.gov.
4. DOD - Department of Defense; www.quicksearch.dla.mil.
5. DOE - Department of Energy; www.energy.gov.
6. EPA - Environmental Protection Agency; www.epa.gov.
7. FAA - Federal Aviation Administration; www.faa.gov.
8. FG - Federal Government Publications; www.gpo.gov.
9. GSA - General Services Administration; www.gsa.gov.
10. HUD - Department of Housing and Urban Development; www.hud.gov.
11. LBL - Lawrence Berkeley National Laboratory; Environmental Energy Technologies Division; www.eetd.lbl.gov.
12. OSHA - Occupational Safety & Health Administration; www.osha.gov.
13. SD - Department of State; www.state.gov.
14. TRB - Transportation Research Board; National Cooperative Highway Research Program; The National Academies; www.trb.org.
15. USDA - Department of Agriculture; Agriculture Research Service; U.S. Salinity Laboratory; www.ars.usda.gov.
16. USDA - Department of Agriculture; Rural Utilities Service; www.usda.gov.
17. USDJ - Department of Justice; Office of Justice Programs; National Institute of Justice; www.ojp.usdoj.gov.
18. USP - U.S. Pharmacopeial Convention; www.usp.org.
19. USPS - United States Postal Service; www.usps.com.

D. Standards and Regulations: Where abbreviations and acronyms are used in Specifications or other Contract Documents, they shall mean the recognized name of the standards and regulations in the following list. This information is subject to change and is believed to be accurate as of the date of the Contract Documents.

1. CFR - Code of Federal Regulations; Available from Government Printing Office; www.gpo.gov/fdsys.
2. DOD - Department of Defense; Military Specifications and Standards; Available from DLA Document Services; www.quicksearch.dla.mil.
3. DSCC - Defense Supply Center Columbus; (See FS).
4. FED-STD - Federal Standard; (See FS).
5. FS - Federal Specification; Available from DLA Document Services; www.quicksearch.dla.mil.

    a. Available from Defense Standardization Program; www.dsp.dla.mil.
    b. Available from General Services Administration; www.gsa.gov.
    c. Available from National Institute of Building Sciences/Whole Building Design Guide; www.wbdg.org/ccb.

6. MILSPEC - Military Specification and Standards; (See DOD).
7. USAB - United States Access Board; www.access-board.gov.
8. USATBCB - U.S. Architectural & Transportation Barriers Compliance Board; (See USAB).

E. State Government Agencies: Where abbreviations and acronyms are used in Specifications or other Contract Documents, they shall mean the recognized name of the entities in the following

list. This information is subject to change and is believed to be accurate as of the date of the Contract Documents.

1. CBHF; State of California; Department of Consumer Affairs; Bureau of Electronic and Appliance Repair, Home Furnishings and Thermal Insulation; www.bearhfti.ca.gov.
2. CCR; California Code of Regulations; Office of Administrative Law; California Title 24 Energy Code; www.calregs.com.
3. CDHS; California Department of Health Services; (See CDPH).
4. CDPH; California Department of Public Health; Indoor Air Quality Program; www.cal-iaq.org.
5. CPUC; California Public Utilities Commission; www.cpuc.ca.gov.
6. SCAQMD; South Coast Air Quality Management District; www.aqmd.gov.
7. TFS; Texas A&M Forest Service; Sustainable Forestry and Economic Development; www.txforestservice.tamu.edu.

PART 2 - PRODUCTS (Not Used)

PART 3 - EXECUTION (Not Used)

END OF SECTION 014200

SECTION 016000 - PRODUCT REQUIREMENTS

PART 1 - GENERAL

1.1 RELATED DOCUMENTS

A. Drawings and general provisions of the Contract, including General and Supplementary Conditions and other Division 01 Specification Sections, apply to this Section.

1.2 SUMMARY

A. Section includes administrative and procedural requirements for selection of products for use in Project; product delivery, storage, and handling; manufacturers' standard warranties on products; special warranties; and comparable products.

1.3 DEFINITIONS

A. Products: Items obtained for incorporating into the Work, whether purchased for Project or taken from previously purchased stock. The term "product" includes the terms "material," "equipment," "system," and terms of similar intent.

1. Named Products: Items identified by manufacturer's product name, including make or model number or other designation shown or listed in manufacturer's published product literature, that is current as of date of the Contract Documents.
2. New Products: Items that have not previously been incorporated into another project or facility. Products salvaged or recycled from other projects are not considered new products.
3. Comparable Product: Product that is demonstrated and approved through submittal process to have the indicated qualities related to type, function, dimension, in-service performance, physical properties, appearance, and other characteristics that equal or exceed those of specified product.

B. Basis-of-Design Product Specification: A specification in which a specific manufacturer's product is named and accompanied by the words "basis-of-design product," including make or model number or other designation, to establish the significant qualities related to type, function, dimension, in-service performance, physical properties, appearance, and other characteristics for purposes of evaluating comparable products of additional manufacturers named in the specification.

1.4 ACTION SUBMITTALS

A. Comparable Product Requests: Submit request for consideration of each comparable product 7 days prior to bidding. Identify product or fabrication or installation method to be replaced. Include Specification Section number and title and Drawing numbers and titles.

1. Include data to indicate compliance with the requirements specified in "Comparable Products" Article.

B. Basis-of-Design Product Specification Submittal: Comply with requirements in Section 013300 "Submittal Procedures." Show compliance with requirements.

1.5 QUALITY ASSURANCE

A. Compatibility of Options: If Contractor is given option of selecting between two or more products for use on Project, select product compatible with products previously selected, even if previously selected products were also options.

1. Each contractor is responsible for providing products and construction methods compatible with products and construction methods of other contractors.
2. If a dispute arises between contractors over concurrently selectable but incompatible products, Engineer will determine which products shall be used.

1.6 PRODUCT DELIVERY, STORAGE, AND HANDLING

A. Deliver, store, and handle products using means and methods that will prevent damage, deterioration, and loss, including theft and vandalism. Comply with manufacturer's written instructions.

B. Delivery and Handling:

1. Schedule delivery to minimize long-term storage at Project site and to prevent overcrowding of construction spaces.
2. Coordinate delivery with installation time to ensure minimum holding time for items that are flammable, hazardous, easily damaged, or sensitive to deterioration, theft, and other losses.
3. Deliver products to Project site in an undamaged condition in manufacturer's original sealed container or other packaging system, complete with labels and instructions for handling, storing, unpacking, protecting, and installing.
4. Inspect products on delivery to determine compliance with the Contract Documents and to determine that products are undamaged and properly protected.

C. Storage:

1. Store products to allow for inspection and measurement of quantity or counting of units.
2. Store materials in a manner that will not endanger Project structure.
3. Store products that are subject to damage by the elements, under cover in a weathertight enclosure above ground, with ventilation adequate to prevent condensation.
4. Protect foam plastic from exposure to sunlight, except to extent necessary for period of installation and concealment.
5. Comply with product manufacturer's written instructions for temperature, humidity, ventilation, and weather-protection requirements for storage.
6. Protect stored products from damage and liquids from freezing.
7. Provide a secure location and enclosure at Project site for storage of materials and equipment by Owner's construction forces. Coordinate location with Owner.

1.7 PRODUCT WARRANTIES

A. Warranties specified in other Sections shall be in addition to, and run concurrent with, other warranties required by the Contract Documents. Manufacturer's disclaimers and limitations on product warranties do not relieve Contractor of obligations under requirements of the Contract Documents.

1. Manufacturer's Warranty: Written warranty furnished by individual manufacturer for a particular product and specifically endorsed by manufacturer to Owner.
2. Special Warranty: Written warranty required by the Contract Documents to provide specific rights for Owner.

B. Special Warranties: Prepare a written document that contains appropriate terms and identification, ready for execution.

1. Manufacturer's Standard Form: Modified to include Project-specific information and properly executed.
2. Specified Form: When specified forms are included with the Specifications, prepare a written document using indicated form properly executed.
3. See other Sections for specific content requirements and particular requirements for submitting special warranties.

C. Submittal Time: Comply with requirements in Section 017700 "Closeout Procedures."

PART 2 - PRODUCTS

2.1 PRODUCT SELECTION PROCEDURES

A. General Product Requirements: Provide products that comply with the Contract Documents, are undamaged and, unless otherwise indicated, are new at time of installation.

1. Provide products complete with accessories, trim, finish, fasteners, and other items needed for a complete installation and indicated use and effect.
2. Standard Products: If available, and unless custom products or nonstandard options are specified, provide standard products of types that have been produced and used successfully in similar situations on other projects.
3. Owner reserves the right to limit selection to products with warranties not in conflict with requirements of the Contract Documents.
4. Where products are accompanied by the term "as selected," Engineer will make selection.
5. Descriptive, performance, and reference standard requirements in the Specifications establish salient characteristics of products.
6. Or Equal: For products specified by name and accompanied by the term "or equal," or "or approved equal," or "or approved," comply with requirements in "Comparable Products" Article to obtain approval for use of an unnamed product.

B. Product Selection Procedures:

1. Product: Where Specifications name a single manufacturer and product, provide the named product that complies with requirements. Comparable products or substitutions for Contractor's convenience will not be considered.
2. Manufacturer/Source: Where Specifications name a single manufacturer or source, provide a product by the named manufacturer or source that complies with requirements. Comparable products or substitutions for Contractor's convenience will not be considered.
3. Products:

    a. Where Specifications include a list of names of both manufacturers and products, provide one of the products listed that complies with requirements. Comparable products or substitutions for Contractor's convenience **will not** be considered unless otherwise indicated.

4. Manufacturers:

    a. Where Specifications include a list of manufacturers' names, provide a product by one of the manufacturers listed that complies with requirements. Comparable products or substitutions for Contractor's convenience will not be considered.

5. Basis-of-Design Product: Where Specifications name a product, or refer to a product indicated on Drawings, and include a list of manufacturers, provide the specified or indicated product or a comparable product by one of the other named manufacturers. Drawings and Specifications indicate sizes, profiles, dimensions, and other characteristics that are based on the product named. Comply with requirements in "Comparable Products" Article for consideration of an unnamed product by one of the other named manufacturers.

PART 3 - EXECUTION (Not Used)

END OF SECTION 016000

SECTION 017300 - EXECUTION

PART 1 - GENERAL

1.1 RELATED DOCUMENTS

A. Drawings and general provisions of the Contract, including General and Supplementary Conditions and other Division 01 Specification Sections, apply to this Section.

1.2 SUMMARY

A. Section includes general administrative and procedural requirements governing execution of the Work including, but not limited to, the following:

1. Construction layout.
2. Field engineering and surveying.
3. Installation of the Work.
4. Cutting and patching.
5. Coordination of Owner-installed products.
6. Progress cleaning.
7. Starting and adjusting.
8. Protection of installed construction.

1.3 DEFINITIONS

A. Cutting: Removal of in-place construction necessary to permit installation or performance of other work.

B. Patching: Fitting and repair work required to restore construction to original conditions after installation of other work.

1.4 INFORMATIONAL SUBMITTALS

A. Cutting and Patching Plan: Submit plan describing procedures at least 10 days prior to the time cutting and patching will be performed. Include the following information:

1. Extent: Describe reason for and extent of each occurrence of cutting and patching.
2. Changes to In-Place Construction: Describe anticipated results. Include changes to structural elements and operating components as well as changes in building appearance and other significant visual elements.
3. Products: List products to be used for patching and firms or entities that will perform patching work.
4. Dates: Indicate when cutting and patching will be performed.
5. Utilities and Mechanical and Electrical Systems: List services and systems that cutting and patching procedures will disturb or affect. List services and systems that will be relocated and those that will be temporarily out of service. Indicate length of time permanent services and systems will be disrupted.

a. Include description of provisions for temporary services and systems during interruption of permanent services and systems.

6. Engineer's Approval: Obtain approval of cutting and patching proposal before cutting and patching. Approval does not waive right to later require removal and replacement of unsatisfactory work.

1.5 QUALITY ASSURANCE

A. Cutting and Patching: Comply with requirements for and limitations on cutting and patching of construction elements.

1. Structural Elements: Do not cut and patch structural elements in a manner that could change their load-carrying capacity or increase deflection. When cutting and patching structural elements, retain a licensed Structural Engineer. Notify Structural Engineer of locations and details of cutting and obtain written approval before proceeding. Shore, brace, and support structural elements during cutting and patching.

2. Operational Elements: Do not cut and patch operating elements and related components in a manner that results in reducing their capacity to perform as intended or that results in increased maintenance or decreased operational life or safety. Operational elements include the following:

a. Primary operational systems and equipment.
b. Fire separation assemblies.
c. Air or smoke barriers.
d. Fire-suppression systems.
e. Mechanical systems piping and ducts.
f. Control systems.
g. Communication systems.
h. Fire-detection and -alarm systems.
i. Conveying systems.
j. Electrical wiring systems.
k. Operating systems of special construction.

3. Other Construction Elements: Do not cut and patch other construction elements or components in a manner that could change their load-carrying capacity, that results in reducing their capacity to perform as intended, or that results in increased maintenance or decreased operational life or safety. Other construction elements include but are not limited to the following:

a. Water, moisture, or vapor barriers.
b. Membranes and flashings.
c. Exterior curtain-wall construction.
d. Sprayed fire-resistive material.
e. Equipment supports.
f. Piping, ductwork, vessels, and equipment.
g. Noise- and vibration-control elements and systems.

4. Visual Elements: Do not cut and patch construction in a manner that results in visual evidence of cutting and patching. Do not cut and patch exposed construction in a manner

that would, in Architect's opinion, reduce the building's aesthetic qualities. Remove and replace construction that has been cut and patched in a visually unsatisfactory manner.

B. Cutting and Patching Conference: Before proceeding, meet at Project site with parties involved in cutting and patching, including mechanical and electrical trades. Review areas of potential interference and conflict. Coordinate procedures and resolve potential conflicts before proceeding.

C. Manufacturer's Installation Instructions: Obtain and maintain on-site manufacturer's written recommendations and instructions for installation of products and equipment.

1.6 WARRANTY

A. Existing Warranties: Remove, replace, patch, and repair materials and surfaces cut or damaged during cutting and patching operations, by methods and with materials so as not to void existing warranties.

PART 2 - PRODUCTS

2.1 MATERIALS

A. General: Comply with requirements specified in other Sections.

B. In-Place Materials: Use materials for patching identical to in-place materials. For exposed surfaces, use materials that visually match in-place adjacent surfaces to the fullest extent possible.

1. If identical materials are unavailable or cannot be used, use materials that, when installed, will provide a match acceptable to Engineer for the visual and functional performance of in-place materials.

PART 3 - EXECUTION

3.1 EXAMINATION

A. Existing Conditions: The existence and location of underground and other utilities and construction indicated as existing are not guaranteed. Before beginning sitework, investigate and verify the existence and location of underground utilities, mechanical, plumbing, and electrical systems, and other construction affecting the Work.

1. Before construction, verify the location and invert elevation at points of connection of sanitary sewer, storm sewer, and water-service piping; underground electrical services, and other utilities.
2. Furnish location data for work related to Project that must be performed by public utilities serving Project site.

B. Examination and Acceptance of Conditions: Before proceeding with each component of the Work, examine substrates, areas, and conditions, with Installer or Applicator present where indicated, for compliance with requirements for installation tolerances and other conditions affecting performance. Record observations.

1. Examine roughing-in for mechanical and electrical systems to verify actual locations of connections before equipment and fixture installation.
2. Examine walls, floors, and roofs for suitable conditions where products and systems are to be installed.
3. Verify compatibility with and suitability of substrates, including compatibility with existing finishes or primers.

C. Written Report: Where a written report listing conditions detrimental to performance of the Work is required by other Sections, include the following:

1. Description of the Work.
2. List of detrimental conditions, including substrates.
3. List of unacceptable installation tolerances.
4. Recommended corrections.

D. Proceed with installation only after unsatisfactory conditions have been corrected. Proceeding with the Work indicates acceptance of surfaces and conditions.

3.2 PREPARATION

A. Existing Utility Information: Furnish information to local utility and Owner that is necessary to adjust, move, or relocate existing utility structures, utility poles, lines, services, or other utility appurtenances located in or affected by construction. Coordinate with authorities having jurisdiction.

B. Field Measurements: Take field measurements as required to fit the Work properly. Recheck measurements before installing each product. Where portions of the Work are indicated to fit to other construction, verify dimensions of other construction by field measurements before fabrication. Coordinate fabrication schedule with construction progress to avoid delaying the Work.

C. Space Requirements: Verify space requirements and dimensions of items shown diagrammatically on Drawings.

D. Review of Contract Documents and Field Conditions: Immediately on discovery of the need for clarification of the Contract Documents caused by differing field conditions outside the control of Contractor, submit a request for information to Engineer according to requirements in Section 013100 "Project Management and Coordination."

3.3 CONSTRUCTION LAYOUT

A. Verification: Before proceeding to lay out the Work, verify layout information shown on Drawings, in relation to the property survey and existing benchmarks. If discrepancies are discovered, notify Engineer promptly.

B. Site Improvements: Locate and lay out site improvements, including pavements, grading, fill and topsoil placement, utility slopes, and rim and invert elevations.

C. Building Lines and Levels: Locate and lay out control lines and levels for structures, building foundations, column grids, and floor levels, including those required for mechanical and electrical work. Transfer survey markings and elevations for use with control lines and levels. Level foundations and piers from two or more locations.

D. Record Log: Maintain a log of layout control work. Record deviations from required lines and levels. Include beginning and ending dates and times of surveys, weather conditions, name and duty of each survey party member, and types of instruments and tapes used. Make the log available for reference by Engineer.

3.4 INSTALLATION

A. General: Locate the Work and components of the Work accurately, in correct alignment and elevation, as indicated.

1. Make vertical work plumb and make horizontal work level.
2. Where space is limited, install components to maximize space available for maintenance and ease of removal for replacement.
3. Conceal pipes, ducts, and wiring in finished areas unless otherwise indicated.
4. Maintain minimum headroom clearance of 96 inches in occupied spaces and 90 inches in unoccupied spaces.

B. Comply with manufacturer's written instructions and recommendations for installing products in applications indicated.

C. Install products at the time and under conditions that will ensure the best possible results. Maintain conditions required for product performance until Substantial Completion.

D. Conduct construction operations so no part of the Work is subjected to damaging operations or loading in excess of that expected during normal conditions of occupancy.

E. Sequence the Work and allow adequate clearances to accommodate movement of construction items on site and placement in permanent locations.

F. Tools and Equipment: Do not use tools or equipment that produce harmful noise levels.

G. Templates: Obtain and distribute to the parties involved templates for work specified to be factory prepared and field installed. Check Shop Drawings of other work to confirm that adequate provisions are made for locating and installing products to comply with indicated requirements.

H. Attachment: Provide blocking and attachment plates and anchors and fasteners of adequate size and number to securely anchor each component in place, accurately located and aligned with other portions of the Work. Where size and type of attachments are not indicated, verify size and type required for load conditions.

1. Mounting Heights: Where mounting heights are not indicated, mount components at heights directed by Engineer.
2. Allow for building movement, including thermal expansion and contraction.
3. Coordinate installation of anchorages. Furnish setting drawings, templates, and directions for installing anchorages, including sleeves, concrete inserts, anchor bolts, and items with integral anchors, that are to be embedded in concrete or masonry. Deliver such items to Project site in time for installation.

I. Joints: Make joints of uniform width. Where joint locations in exposed work are not indicated, arrange joints for the best visual effect. Fit exposed connections together to form hairline joints.

J. Hazardous Materials: Use products, cleaners, and installation materials that are not considered hazardous.

3.5 CUTTING AND PATCHING

A. Cutting and Patching, General: Employ skilled workers to perform cutting and patching. Proceed with cutting and patching at the earliest feasible time, and complete without delay.

1. Cut in-place construction to provide for installation of other components or performance of other construction, and subsequently patch as required to restore surfaces to their original condition.

B. Existing Warranties: Remove, replace, patch, and repair materials and surfaces cut or damaged during installation or cutting and patching operations, by methods and with materials so as not to void existing warranties.

C. Temporary Support: Provide temporary support of work to be cut.

D. Protection: Protect in-place construction during cutting and patching to prevent damage. Provide protection from adverse weather conditions for portions of Project that might be exposed during cutting and patching operations.

E. Adjacent Occupied Areas: Where interference with use of adjoining areas or interruption of free passage to adjoining areas is unavoidable, coordinate cutting and patching according to requirements in Section 011000 "Summary."

F. Existing Utility Services and Mechanical/Electrical Systems: Where existing services/systems are required to be removed, relocated, or abandoned, bypass such services/systems before cutting to prevent interruption to occupied areas.

G. Cutting: Cut in-place construction by sawing, drilling, breaking, chipping, grinding, and similar operations, including excavation, using methods least likely to damage elements retained or adjoining construction. If possible, review proposed procedures with original Installer; comply with original Installer's written recommendations.

1. In general, use hand or small power tools designed for sawing and grinding, not hammering and chopping. Cut holes and slots neatly to minimum size required, and with minimum disturbance of adjacent surfaces. Temporarily cover openings when not in use.
2. Finished Surfaces: Cut or drill from the exposed or finished side into concealed surfaces.

3. Concrete and Masonry: Cut using a cutting machine, such as an abrasive saw or a diamond-core drill.
4. Excavating and Backfilling: Comply with requirements in applicable Sections where required by cutting and patching operations.
5. Mechanical and Electrical Services: Cut off pipe or conduit in walls or partitions to be removed. Cap, valve, or plug and seal remaining portion of pipe or conduit to prevent entrance of moisture or other foreign matter after cutting.
6. Proceed with patching after construction operations requiring cutting are complete.

H. Patching: Patch construction by filling, repairing, refinishing, closing up, and similar operations following performance of other work. Patch with durable seams that are as invisible as practicable. Provide materials and comply with installation requirements specified in other Sections, where applicable.

1. Inspection: Where feasible, test and inspect patched areas after completion to demonstrate physical integrity of installation.
2. Exposed Finishes: Restore exposed finishes of patched areas and extend finish restoration into retained adjoining construction in a manner that will minimize evidence of patching and refinishing.

    a. Clean piping, conduit, and similar features before applying paint or other finishing materials.
    b. Restore damaged pipe covering to its original condition.

3. Floors and Walls: Where walls or partitions that are removed extend one finished area into another, patch and repair floor and wall surfaces in the new space. Provide an even surface of uniform finish, color, texture, and appearance. Remove in-place floor and wall coverings and replace with new materials, if necessary, to achieve uniform color and appearance.

    a. Where patching occurs in a painted surface, prepare substrate and apply primer and intermediate paint coats appropriate for substrate over the patch, and apply final paint coat over entire unbroken surface containing the patch. Provide additional coats until patch blends with adjacent surfaces.

4. Ceilings: Patch, repair, or rehang in-place ceilings as necessary to provide an even-plane surface of uniform appearance.
5. Exterior Building Enclosure: Patch components in a manner that restores enclosure to a weathertight condition and ensures thermal and moisture integrity of building enclosure.

I. Cleaning: Clean areas and spaces where cutting and patching are performed. Remove paint, mortar, oils, putty, and similar materials from adjacent finished surfaces.

3.6 OWNER-INSTALLED PRODUCTS

A. Site Access: Provide access to Project site for Owner's construction personnel.

B. Coordination: Coordinate construction and operations of the Work with work performed by Owner's construction personnel.

1. Construction Schedule: Inform Owner of Contractor's preferred construction schedule for Owner's portion of the Work. Adjust construction schedule based on a mutually agreeable timetable. Notify Owner if changes to schedule are required due to differences in actual construction progress.
2. Preinstallation Conferences: Include Owner's construction personnel at preinstallation conferences covering portions of the Work that are to receive Owner's work. Attend preinstallation conferences conducted by Owner's construction personnel if portions of the Work depend on Owner's construction.

3.7 PROGRESS CLEANING

A. General: Clean Project site and work areas daily, including common areas. Enforce requirements strictly. Dispose of materials lawfully.

1. Comply with requirements in NFPA 241 for removal of combustible waste materials and debris.
2. Do not hold waste materials more than seven days during normal weather or three days if the temperature is expected to rise above 80 deg F.
3. Containerize hazardous and unsanitary waste materials separately from other waste. Mark containers appropriately and dispose of legally, according to regulations.

    a. Use containers intended for holding waste materials of type to be stored.

4. Coordinate progress cleaning for joint-use areas where Contractor and other contractors are working concurrently.

B. Site: Maintain Project site free of waste materials and debris.

C. Work Areas: Clean areas where work is in progress to the level of cleanliness necessary for proper execution of the Work.

1. Remove liquid spills promptly.
2. Where dust would impair proper execution of the Work, broom-clean or vacuum the entire work area, as appropriate.

D. Installed Work: Keep installed work clean. Clean installed surfaces according to written instructions of manufacturer or fabricator of product installed, using only cleaning materials specifically recommended. If specific cleaning materials are not recommended, use cleaning materials that are not hazardous to health or property and that will not damage exposed surfaces.

E. Concealed Spaces: Remove debris from concealed spaces before enclosing the space.

F. Exposed Surfaces in Finished Areas: Clean exposed surfaces and protect as necessary to ensure freedom from damage and deterioration at time of Substantial Completion.

G. Waste Disposal: Do not bury or burn waste materials on-site. Do not wash waste materials down sewers or into waterways. Comply with waste disposal requirements.

H. During handling and installation, clean and protect construction in progress and adjoining materials already in place. Apply protective covering where required to ensure protection from damage or deterioration at Substantial Completion.

I. Clean and provide maintenance on completed construction as frequently as necessary through the remainder of the construction period. Adjust and lubricate operable components to ensure operability without damaging effects.

J. Limiting Exposures: Supervise construction operations to assure that no part of the construction, completed or in progress, is subject to harmful, dangerous, damaging, or otherwise deleterious exposure during the construction period.

3.8 STARTING AND ADJUSTING

A. Coordinate startup and adjusting of equipment and operating components with requirements in Section 019113 "General Commissioning Requirements."

B. Start equipment and operating components to confirm proper operation. Remove malfunctioning units, replace with new units, and retest.

C. Adjust equipment for proper operation. Adjust operating components for proper operation without binding.

D. Test each piece of equipment to verify proper operation. Test and adjust controls and safeties. Replace damaged and malfunctioning controls and equipment.

E. Manufacturer's Field Service: Comply with qualification requirements in Section 014000 "Quality Requirements."

3.9 PROTECTION OF INSTALLED CONSTRUCTION

A. Provide final protection and maintain conditions that ensure installed Work is without damage or deterioration at time of Substantial Completion.

B. Comply with manufacturer's written instructions for temperature and relative humidity.

END OF SECTION 017300

SECTION 017400 - GUARANTEES

PART 1 - GENERAL

1.1 RELATED DOCUMENTS

A. Drawings and general provisions of Contract, including General and Supplementary Conditions and Division 1, apply to this Section.

B. Refer to Instructions to Bidders for substitution of materials and products.

C. Addenda issued during the bidding period that affect this section of the specifications.

1.2 WORK INCLUDED

A. Unless stated otherwise on the Certificate of Substantial Completion, all guarantees shall commence with the date of Substantial Completion.

B. Unless otherwise stated in these specifications, all guarantees shall include labor, material and delivery costs required for correction.

C. General: In addition to the General Contractor's one year guarantee for the entire project, guarantees shall be furnished by subcontractors and suppliers. These guarantees shall be submitted to the Engineer in duplicate prior to application for final payment. Refer to individual specification sections for additional guarantees and requirements.
   1. One Year Guarantees
      a. MEP SYSTEMs.
   2. Two Year Guarantees
      a. Controls
   3. Three Year Guarantees
      a. VFDs
      b. Equipment Controllers
   4. Five Year Guarantees
      a. Chiller
      b. Compressors
   5. Ten Years Guaranty
      a. Not Applicable

PART 2 - PRODUCTS

2.1 GUARANTEES

A. Where guarantees are indicated to be provided by subcontractor or supplier, a detailed warranty written on the required form shall be provided. Refer to Section 017700 for Warranty forms.

B. Manufacturer's standard warranties shall be adjusted as required to include all specified requirements in addition to manufacturer's normal provisions. Manufacturer guarantees shall be written on appropriate printed letterhead.

2.2 MATERIALS

A. Unless otherwise approved by the Engineer, all replacement materials shall be new and provided by the same manufacturer as the original installation.

PART 3 - EXECUTION

3.1 GENERAL

A. Contractor shall arrange for all required inspections during the warranty period. Regardless of the wording of individual warranties, the Owner shall not be responsible for notification requirements for routine inspections during the General Contractor's warranty period.

B. Upon receipt of written or verbal notice by the Owner or Engineer of a deficiency, the Contractor shall promptly respond with inspection and repair during the General Contractor's warranty period.

C. The General Contractor shall be responsible for coordinating the activities of subcontractors, suppliers and manufacturers during the General Contractor's warranty period and the subcontractor/supplier/manufacturer extended warranty period.

END OF SECTION 017400

SECTION 017700 - CLOSEOUT PROCEDURES

PART 1 - GENERAL

1.1 RELATED DOCUMENTS

A. Drawings and general provisions of the Contract, including General and Supplementary Conditions and other Division 01 Specification Sections, apply to this Section.

1.2 SUMMARY

A. Section includes administrative and procedural requirements for contract closeout, including, but not limited to, the following:

1. Substantial Completion procedures.
2. Final completion procedures.
3. Warranties.
4. Final cleaning.
5. Repair of the Work.

B. Related Requirements:

1. "Construction Contract Close Out Checklist", of this Section.
2. Additional requirements from Owner.
3. Section 017300 "Execution" for progress cleaning of Project site.
4. Section 017823 "Operation and Maintenance Data" for operation and maintenance manual requirements.
5. Section 017839 "Project Record Documents" for submitting record Drawings, record Specifications, and record Product Data.
6. Section 017900 "Demonstration and Training" for requirements for instructing Owner's personnel.

1.3 ACTION SUBMITTALS

A. Product Data: For cleaning agents.

B. Contractor's List of Incomplete Items: Initial submittal at Substantial Completion.

C. Certified List of Incomplete Items: Final submittal at Final Completion.

1.4 CLOSEOUT SUBMITTALS

A. Certificates of Release: From authorities having jurisdiction.

B. Certificate of Insurance: For continuing coverage.

C. Field Report: For pest control inspection.

1.5 MAINTENANCE MATERIAL SUBMITTALS

A. Schedule of Maintenance Material Items: For maintenance material submittal items specified in other Sections.

1.6 SUBSTANTIAL COMPLETION PROCEDURES

A. Contractor's List of Incomplete Items: Prepare and submit a list of items to be completed and corrected (Contractor's punch list), indicating the value of each item on the list and reasons why the Work is incomplete.

B. Submittals Prior to Substantial Completion: Complete the following a minimum of 15 days prior to requesting inspection for determining date of Substantial Completion. List items below that are incomplete at time of request.

1. Certificates of Release: Obtain and submit releases from authorities having jurisdiction permitting Owner unrestricted use of the Work and access to services and utilities. Include occupancy permits, operating certificates, and similar releases.
2. Submit closeout submittals specified in other Division 01 Sections, including project record documents, operation and maintenance manuals, final completion construction photographic documentation, damage or settlement surveys, property surveys, and similar final record information.
3. Submit closeout submittals specified in individual Sections, including specific warranties, workmanship bonds, maintenance service agreements, final certifications, and similar documents.
4. Submit maintenance material submittals specified in individual Sections, including tools, spare parts, extra materials, and similar items, and deliver to location designated by Engineer. Label with manufacturer's name and model number where applicable.

    a. Schedule of Maintenance Material Items: Prepare and submit schedule of maintenance material submittal items, including name and quantity of each item and name and number of related Specification Section. Obtain Engineer's signature for receipt of submittals.

5. Submit test/adjust/balance records.
6. Submit changeover information related to Owner's occupancy, use, operation, and maintenance.

C. Procedures Prior to Substantial Completion: Complete the following a minimum of 15 days prior to requesting inspection for determining date of Substantial Completion. List items below that are incomplete at time of request.

1. Advise Owner of pending insurance changeover requirements.
2. Make final changeover of permanent locks and deliver keys to Owner. Advise Owner's personnel of changeover in security provisions.
3. Complete startup and testing of systems and equipment.
4. Perform preventive maintenance on equipment used prior to Substantial Completion.
5. Instruct Owner's personnel in operation, adjustment, and maintenance of products, equipment, and systems. Submit demonstration and training video recordings specified in Section 017900 "Demonstration and Training."

6. Advise Owner of changeover in heat and other utilities.
7. Participate with Owner in conducting inspection and walkthrough with local emergency responders.
8. Terminate and remove temporary facilities from Project site, along with mockups, construction tools, and similar elements.
9. Complete final cleaning requirements, including touchup painting.
10. Touch up and otherwise repair and restore marred exposed finishes to eliminate visual defects.

D. Inspection: Submit a written request for inspection to determine Substantial Completion a minimum of 10 days prior to date the work will be completed and ready for final inspection and tests. On receipt of request, Engineer will either proceed with inspection or notify Contractor of unfulfilled requirements. Engineer will prepare the Certificate of Substantial Completion after inspection or will notify Contractor of items, either on Contractor's list or additional items identified by Engineer, that must be completed or corrected before certificate will be issued.

1. Reinspection: Request reinspection when the Work identified in previous inspections as incomplete is completed or corrected.
2. Results of completed inspection will form the basis of requirements for final completion.

1.7 FINAL COMPLETION PROCEDURES

A. Submittals Prior to Final Completion: Before requesting final inspection for determining final completion, complete the following:

1. Submit a final Application for Payment according to Section 012900 "Payment Procedures."
2. Certified List of Incomplete Items: Submit certified copy of Engineer's Substantial Completion inspection list of items to be completed or corrected (punch list), endorsed and dated by Engineer. Certified copy of the list shall state that each item has been completed or otherwise resolved for acceptance.
3. Certificate of Insurance: Submit evidence of final, continuing insurance coverage complying with insurance requirements.
4. Submit pest-control final inspection report.

B. Inspection:
1. It is expected that Contractor will have thoroughly verified that all requirements have been fulfilled, and deficiencies repaired, **before** notifying Engineer that system is ready for final inspection, and **before** arranging final acceptance testing with Owner. Owner and Engineer therefore expect to make but one final inspection of system.
2. Submit a written request for final inspection for acceptance. Provide at least 7 days' notice to Owner and Owner's representative before test. Arrange mutually convenient time for conducting test.
3. On receipt of request, Engineer will either proceed with inspection. Engineer will prepare a final Certificate for Payment after inspection or will notify Contractor of construction that must be completed or corrected before certificate will be issued.

4. Reinspection:

a. Should more than one "final" inspection be required due to significant deficiencies, Contractor will be required to reimburse Engineer at a rate of $200.00 per hour for expenses to cover any and all re-inspections required.
b. Request reinspection when the Work identified in previous inspections as incomplete is completed or corrected.

1.8 LIST OF INCOMPLETE ITEMS (PUNCH LIST)

A. Organization of List: Include name and identification of each space and area affected by construction operations for incomplete items and items needing correction including, if necessary, areas disturbed by Contractor that are outside the limits of construction.

1. Organize list of spaces in sequential order.
2. Organize items applying to each space by major element, including categories for ceiling, individual walls, floors, equipment, and building systems.
3. Include the following information at the top of each page:

a. Project name.
b. Date.
c. Name of Engineer.
d. Name of Contractor.
e. Page number.

1.9 SUBMITTAL OF PROJECT WARRANTIES

A. Time of Submittal: Submit written warranties on request of Engineer for designated portions of the Work where commencement of warranties other than date of Substantial Completion is indicated, or when delay in submittal of warranties might limit Owner's rights under warranty.

B. Partial Occupancy: Submit properly executed warranties within 15 days of completion of designated portions of the Work that are completed and occupied or used by Owner during construction period by separate agreement with Contractor.

C. Organize warranty documents into an orderly sequence based on the table of contents of Project Manual.

1. Bind warranties and bonds in heavy-duty, three-ring, vinyl-covered, loose-leaf binders, thickness as necessary to accommodate contents, and sized to receive 8-1/2-by-11-inch paper.
2. Provide heavy paper dividers with plastic-covered tabs for each separate warranty. Mark tab to identify the product or installation. Provide a typed description of the product or installation, including the name of the product and the name, address, and telephone number of Installer.
3. Identify each binder on the front and spine with the typed or printed title "WARRANTIES," Project name, and name of Contractor.
4. Warranty Electronic File: Scan warranties and bonds and assemble complete warranty and bond submittal package into a single indexed electronic PDF file with links enabling navigation to each item. Provide bookmarked table of contents at beginning of document.

D. Provide additional copies of each warranty to include in operation and maintenance manuals.

1.10 PROJECT RECORD DOCUMENTS

A. General: Do not use Project Record Documents for construction purposes. Protect Project Record Documents from deterioration and loss. Provide access to Project Record Documents for Engineer's reference during normal working hours.

B. Record Drawings: Maintain and submit one set of blue- or black-line white prints of Contract Drawings and Shop Drawings.

1. Mark Record Prints to show the actual installation where installation varies from that shown originally. Require individual or entity who obtained record data, whether individual or entity is Installer, subcontractor, or similar entity, to prepare the marked-up Record Prints.

    a. Give particular attention to information on concealed elements that cannot be readily identified and recorded later.
    b. Accurately record information in an understandable drawing technique.
    c. Record data as soon as possible after obtaining it. Record and check the markup before enclosing concealed installations.
    d. Mark Contract Drawings or Shop Drawings, whichever is most capable of showing actual physical conditions, completely and accurately. Where Shop Drawings are marked, show cross-reference on Contract Drawings.

2. Mark record sets with erasable, red-colored pencil. Use other colors to distinguish between changes for different categories of the Work at the same location.
3. Mark important additional information that was either shown schematically or omitted from original Drawings.
4. Note Construction Change Directive numbers, Change Order numbers, alternate numbers, and similar identification where applicable.
5. Identify and date each Record Drawing; include the designation "PROJECT RECORD DRAWING" in a prominent location. Organize into manageable sets; bind each set with durable paper cover sheets. Include identification on cover sheets.

C. Record Specifications: Submit one copy of Project's Specifications, including addenda and contract modifications. Mark copy to indicate the actual product installation where installation varies from that indicated in Specifications, addenda, and contract modifications.

1. Give particular attention to information on concealed products and installations that cannot be readily identified and recorded later.
2. Mark copy with the proprietary name and model number of products, materials, and equipment furnished, including substitutions and product options selected.
3. Note related Change Orders, Record Drawings, where applicable.

D. Record Product Data: Submit one copy of each Product Data submittal. Mark one set to indicate the actual product installation where installation varies substantially from that indicated in Product Data.

1. Give particular attention to information on concealed products and installations that cannot be readily identified and recorded later.
2. Include significant changes in the product delivered to Project site and changes in manufacturer's written instructions for installation.
3. Note related Change Orders, Record Drawings, where applicable.

E. Miscellaneous Record Submittals: Assemble miscellaneous records required by other Specification Sections for miscellaneous record keeping and submittal in connection with actual performance of the Work. Bind or file miscellaneous records and identify each, ready for continued use and reference.

PART 2 - PRODUCTS

2.1 MATERIALS

A. Cleaning Agents: Use cleaning materials and agents recommended by manufacturer or fabricator of the surface to be cleaned. Do not use cleaning agents that are potentially hazardous to health or property or that might damage finished surfaces.

1. Use cleaning products that comply with Green Seal's GS-37, or if GS-37 is not applicable, use products that comply with the California Code of Regulations maximum allowable VOC levels.

PART 3 - EXECUTION

3.1 DEMONSTRATION AND TRAINING

A. Instruction: Instruct Owner's personnel to adjust, operate, and maintain systems, subsystems, and equipment not part of a system.

1. Provide instructors experienced in operation and maintenance procedures.
2. Provide instruction at mutually agreed-on times. For equipment that requires seasonal operation, provide similar instruction at the start of each season.
3. Schedule training with Owner, through Engineer with at least seven days' advance notice.
4. Coordinate instructors, including providing notification of dates, times, length of instruction, and course content.

B. Program Structure: Develop an instruction program that includes individual training modules for each system and equipment not part of a system, as required by individual Specification Sections. For each training module, develop a learning objective and teaching outline. Include instruction for the following:

1. System design and operational philosophy.
2. Review of documentation.
3. Operations.
4. Adjustments.
5. Troubleshooting.

6. Maintenance.
7. Repair.

3.2 FINAL CLEANING

A. General: Perform final cleaning. Conduct cleaning and waste-removal operations to comply with local laws and ordinances and Federal and local environmental and antipollution regulations.

B. Cleaning: Employ experienced workers or professional cleaners for final cleaning. Clean each surface or unit to condition expected in an average commercial building cleaning and maintenance program. Comply with manufacturer's written instructions.

1. Complete the following cleaning operations before requesting inspection for certification of Substantial Completion for entire Project or for a designated portion of Project:

    a. Clean Project site, yard, and grounds, in areas disturbed by construction activities, including landscape development areas, of rubbish, waste material, litter, and other foreign substances.
    b. Sweep paved areas broom clean. Remove petrochemical spills, stains, and other foreign deposits.
    c. Rake grounds that are neither planted nor paved to a smooth, even-textured surface.
    d. Remove tools, construction equipment, machinery, and surplus material from Project site.
    e. Clean exposed exterior and interior hard-surfaced finishes to a dirt-free condition, free of stains, films, and similar foreign substances. Avoid disturbing natural weathering of exterior surfaces. Restore reflective surfaces to their original condition.
    f. Remove debris and surface dust from limited access spaces, including roofs, plenums, shafts, trenches, equipment vaults, manholes, attics, and similar spaces.
    g. Sweep concrete floors broom clean in unoccupied spaces.
    h. Vacuum carpet and similar soft surfaces, removing debris and excess nap; clean according to manufacturer's recommendations if visible soil or stains remain.
    i. Clean transparent materials, including mirrors and glass in doors and windows. Remove glazing compounds and other noticeable, vision-obscuring materials. Polish mirrors and glass, taking care not to scratch surfaces.
    j. Remove labels that are not permanent.
    k. Wipe surfaces of mechanical and electrical equipment and similar equipment. Remove excess lubrication, paint and mortar droppings, and other foreign substances.
    l. Clean plumbing fixtures to a sanitary condition, free of stains, including stains resulting from water exposure.
    m. Replace disposable air filters and clean permanent air filters. Clean exposed surfaces of diffusers, registers, and grills.
    n. Clean ducts, blowers, and coils if units were operated without filters during construction or that display contamination with particulate matter on inspection.

        1) Clean HVAC system in compliance with NADCA Standard 1992-01. Provide written report on completion of cleaning.

o. Clean light fixtures, lamps, globes, and reflectors to function with full efficiency.
p. Leave Project clean and ready for occupancy.

C. Pest Control: Comply with pest control requirements in Section 015000 "Temporary Facilities and Controls." Prepare written report.

D. Construction Waste Disposal: Comply with waste disposal requirements.

3.3 REPAIR OF THE WORK

A. Complete repair and restoration operations before requesting inspection for determination of Substantial Completion.

B. Repair or remove and replace defective construction. Repairing includes replacing defective parts, refinishing damaged surfaces, touching up with matching materials, and properly adjusting operating equipment. Where damaged or worn items cannot be repaired or restored, provide replacements. Remove and replace operating components that cannot be repaired. Restore damaged construction and permanent facilities used during construction to specified condition.

1. Remove and replace chipped, scratched, and broken glass, reflective surfaces, and other damaged transparent materials.
2. Touch up and otherwise repair and restore marred or exposed finishes and surfaces. Replace finishes and surfaces that that already show evidence of repair or restoration.

    a. Do not paint over "UL" and other required labels and identification, including mechanical and electrical nameplates. Remove paint applied to required labels and identification.

3. Replace parts subject to operating conditions during construction that may impede operation or reduce longevity.
4. Replace burned-out bulbs, bulbs noticeably dimmed by hours of use, and defective and noisy starters in fluorescent and mercury vapor fixtures to comply with requirements for new fixtures.

PART 4 - PROJECT CLOSEOUT MANUAL AND FORMS

4.1 FORMS

A. The following forms shall be submitted to the Engineer during the construction contract close out process:
1. Contractor's Affidavit of Payment of Debts and Claims
2. Contractor's Affidavit of Payment of Release of Liens
3. Consent of Surety to Final Payment
4. General Contractor Affidavit and Release
5. Subcontractor/Supplier Affidavit and Release
6. General Contractor Guarantee
7. Subcontractor Guarantee

8. General Contractor Hazardous Material Certificate
9. Subcontractor/Supplier Hazardous Material Certificate

B. Use only the listed or enclosed forms.

4.2 PROJECT CLOSE OUT MANUAL

A. The Contractor shall assemble and deliver to the Engineer two (2) complete copies of the Project Close Out Manual consisting of the documents listed below and others as may be required under other sections of the Project Manual. Manual shall be constructed of a good quality vinyl 3 ring binder with all pages 8½" x 11".

B. First sheet shall identify the project, Owner, Engineer, Engineer's project number, Consultants and Contractor. Provide company name, address, telephone number and contact representative for each.

C. Subsequent pages shall include the Table of Contents as included herein and all project data included in the Table of Contents. Provide identifying tabs between all sections.

4.3 CLOSEOUT CHECKLIST

A. The Construction Contract Closeout Checklist included herein recaps the major items to be addressed during the close out process. This list is to be used by the Engineer and Contractor.

B. **Not all closeout form templates are included in this section. The Owner has provided a list of closeout requirements, which will be issued at a later date. Contractor shall comply with such requirements upon issuance.**

CONSTRUCTION CONTRACT CLOSEOUT MANUAL TABLE OF CONTENTS

1. Section 1: Contractor's Affidavit of Payment of Debts and Claims
2. Section 2: Contractor's Affidavit of Release of Liens
3. Section 3: Consent of Surety to Final Payment
4. Section 4: Certificate of Substantial Completion
5. Section 5: General Contractor Affidavit and Release
6. Section 6: Subcontractor/Supplier Affidavit and Release (from each subcontractor and supplier)
7. Section 7: General Contractor Guarantee
8. Section 8: Subcontractor Guarantee (from each subcontractor)
9. Section 9: List of Final Subcontractors/Suppliers
10. Section 10: Manufacturer's Guarantees and extended service contracts (NA)
11. Section 11: General Contractor Hazardous Material Certificate
12. Section 12: Subcontractor/Supplier Hazardous Material Certificate
13. Section 13: Miscellaneous
14. Section 14: N/A
15. Section 15: Mechanical Systems
16. Section 16: Electrical Systems
17. Section 17: Ceiling Systems
18. Section 18: Control System

GENERAL CONTRACTOR AFFIDAVIT AND RELEASE

STATE OF TEXAS

COUNTY OF _____

PROJECT: _____

_____

OWNER: _____

ENGINEER_____

KNOW ALL MEN BY THESE PRESENTS:

_____, being first duly sworn, disposes and says:

1. That he/she is the _____ of _____, the contractor who constructed the project referenced above, and that, he/she is duly authorized to make this General Contractor Affidavit and Release.

2. That to the best of his/her knowledge and belief, all work required under the contract of the subject construction project has been performed in accordance with the terms thereof, there are no unsatisfied claims for damages resulting from injury or death to any employees, subcontractors, or the public at large arising out of the performance of said contract, or any suits or claims for any other damages of any kind, nature, or description which might constitute a lien upon the property of the Owner.

3. That upon full payment of all sums due him/her for materials furnished and services rendered by the undersigned in connection with the performance of said contract, as evidenced by the amount shown on the Final Application and Certificate for Payment, the Contractor will release the Owner, the Engineer and the Engineer's consultants from any and all claims of any character arising out of or in any way connected with performance of said contract.

ATTEST (If Corporation)

_____
Name of Contractor

_____ _____ _____
Secretary By Date

Subscribed and sworn to before me on this _____ day of _____ , 20__.

Notary Public: _____

My Commission Expires: _____

SUBCONTRACTOR / SUPPLIER AFFIDAVIT AND RELEASE

STATE OF TEXAS

COUNTY OF _____

PROJECT: _____

_____

OWNER: _____

ENGINEER_____

CONTRACTOR: _____

KNOW ALL MEN BY THESE PRESENTS:

_____, being first duly sworn, disposes and says:

1. That he/she is the _____ of _____, the subcontractor/supplier who supplied, installed, and/or erected the work described below, and that, he/she is duly authorized to make this Subcontractor/Supplier Affidavit and Release:

   Work Performed: _____

   Specification Section(s): _____

2. That all work required under the subject subcontract or purchase order of the subject construction project has been performed in accordance with the terms thereof.

3. That to the best of his/her knowledge and belief, there are no unsatisfied claims for damages resulting from injury or death to any employees, sub-subcontractors, or the public at large arising out of the performance of said contract, or any suits or claims for any other damages of any kind, nature, or description which might constitute a lien upon the property of the Owner.

4. That upon full payment by the Contractor of all sums due it for materials furnished and services rendered by the undersigned in connection with the performance of said contract, as evidenced by the final payment amount shown below, the Subcontractor/Supplier will release the Owner, the Engineer and the Engineer's consultants from any and all claims of any character arising out of or in any way connected with performance of said contract.

   a. Total Amount Paid to Date to this Subcontractor/Supplier: _____

   b. Final Payment Amount owed to this Subcontractor/Supplier: _____

   c. Final Subcontract Amount: _____
   (a + b = c)

ATTEST (If Corporation)

_____
Name of Subcontractor / Supplier

_____ _____ _____
Secretary By Date

Subscribed and sworn to before me on this _____ day of _____ , 20__.

Notary Public: _____

My Commission Expires: _____

GENERAL CONTRACTOR GUARANTEE

STATE OF TEXAS

COUNTY OF _____

PROJECT: _____

_____

OWNER: _____

ENGINEER_____

KNOW ALL MEN BY THESE PRESENTS:

_____, being first duly sworn, disposes and says:

1. That he/she is the _____ of _____, the contractor who constructed the project referenced above, and that, he/she is duly authorized to make this General Contractor Guarantee.

2. The undersigned Contractor warrants to the Owner and Engineer that materials and equipment furnished under the Contract are of good quality and new except where otherwise required or permitted by the Contract Documents, that the Work is free from defects not inherent in the quality required or permitted, and that the Work conforms with the requirements of the Contract Documents. Work not conforming to these requirements, including substitutions not properly approved and authorized, may be considered defective. The Contractor's warranty excludes remedy from damage or defect caused by abuse, modifications not executed by the Contractor, improper or insufficient maintenance, improper operation, or normal wear and tear under normal usage.

3. In the event of failure of materials, products, or workmanship, during the specified warranty periods, the Contractor shall take appropriate measures to assure correction or replacement of the defective items, whether notified by the Owner or Engineer.

4. The Contractor warrants the entire project for a period of **12** months from the Date of Substantial Completion and specific sections of work for such additional periods as enumerated in the Contract Documents, except as follows:

_____

_____

ATTEST (If Corporation)

_____
Name of Contractor

_____ _____ _____
Secretary By Date

Subscribed and sworn to before me on this _____ day of _____ , 20__.

Notary Public: _____

My Commission Expires: _____

SUBCONTRACTOR GUARANTEE

STATE OF TEXAS

COUNTY OF _____

PROJECT: _____

_____

OWNER: _____

ENGINEER_____

CONTRACTOR: _____

KNOW ALL MEN BY THESE PRESENTS:

_____, being first duly sworn, disposes and says:

1. That he/she is the _____ of _____, the subcontractor who supplied, installed, and/or erected the work described below, and that, he/she is duly authorized to make this Subcontractor Guarantee:

   Work Performed: _____

   Specification Section(s): _____

2. The undersigned Subcontractor warrants to the Owner and Engineer that materials and equipment furnished under the Contract are of good quality and new except where otherwise required or permitted by the Contract Documents, that the Work is free from defects not inherent in the quality required or permitted, and that the Work conforms with the requirements of the Contract Documents. Work not conforming to these requirements, including substitutions not properly approved and authorized, may be considered defective. The Subcontractor's warranty excludes remedy from damage or defect caused by abuse, modifications not executed by the Subcontractor, improper or insufficient maintenance, improper operation, or normal wear and tear under normal usage.
3. In the event of failure of materials, products, or workmanship, during the specified warranty periods, the Contractor shall take appropriate measures to assure correction or replacement of the defective items, whether notified by the Contractor, Owner or Engineer.
4. The Subcontractor warrants the work performed for a period of _____ months from the Date of Substantial Completion, except as follows:

   _____

   _____

ATTEST (If Corporation)

_____
Name of Subcontractor / Supplier

_____ _____ _____
Secretary By Date

Subscribed and sworn to before me on this _____ day of _____ , 20__.

Notary Public: _____

My Commission Expires: _____

GENERAL CONTRACTOR HAZARDOUS MATERIAL CERTIFICATE

STATE OF TEXAS

COUNTY OF _____

PROJECT: _____

_____

OWNER: _____

ENGINEER_____

KNOW ALL MEN BY THESE PRESENTS:

_____, being first duly sworn, disposes and says:

1. That he/she is the _____ of _____, the contractor who constructed the project referenced above, and that, he/she is duly authorized to make this Certification.
2. That to the best of his/her information, knowledge, and belief none of the below listed hazardous materials have been incorporated into the project:
   - Asbestos
   - Lead
   - P.C.B. (Polychloride Biphenyls)
   - Refrigerant R-11, R-12, R-113, R-114, R-500 and R-502

SUBCONTRACTOR HAZARDOUS MATERIAL CERTIFICATE

STATE OF TEXAS

COUNTY OF _____

PROJECT: _____

_____

OWNER: _____

ENGINEER_____

KNOW ALL MEN BY THESE PRESENTS:

_____, being first duly sworn, disposes and says:

3. That he/she is the _____ of _____, the contractor who constructed the project referenced above, and that, he/she is duly authorized to make this Certification.

4. That to the best of his/her information, knowledge, and belief none of the below listed hazardous materials have been incorporated into the project:

   - Asbestos
   - Lead
   - P.C.B. (Polychloride Biphenyls)
   - Refrigerant R-11, R-12, R-113, R-114, R-500 and R-502

END OF SECTION 017700

SECTION 017823 - OPERATION AND MAINTENANCE DATA

PART 1 - GENERAL

1.1 RELATED DOCUMENTS

A. Drawings and general provisions of the Contract, including General and Supplementary Conditions and other Division 01 Specification Sections, apply to this Section.

1.2 SUMMARY

A. Section includes administrative and procedural requirements for preparing operation and maintenance manuals, including the following:

1. Operation and maintenance documentation directory.
2. Emergency manuals.
3. Operation manuals for systems, subsystems, and equipment.
4. Product maintenance manuals.
5. Systems and equipment maintenance manuals.

1.3 DEFINITIONS

A. System: An organized collection of parts, equipment, or subsystems united by regular interaction.

B. Subsystem: A portion of a system with characteristics similar to a system.

1.4 CLOSEOUT SUBMITTALS

A. Manual Content: Operations and maintenance manual content is specified in individual Specification Sections to be reviewed at the time of Section submittals. Submit reviewed manual content formatted and organized as required by this Section.

1. Engineer will comment on whether content of operations and maintenance submittals are acceptable.
2. Where applicable, clarify and update reviewed manual content to correspond to revisions and field conditions.

B. Format: Submit operations and maintenance manuals in the following format:

1. PDF electronic file. Assemble each manual into a composite electronically indexed file. Submit on digital media acceptable to Engineer.

a. Name each indexed document file in composite electronic index with applicable item name. Include a complete electronically linked operation and maintenance directory.
b. Enable inserted reviewer comments on draft submittals.

2. Three paper copies. Include a complete operation and maintenance directory. Enclose title pages and directories in clear plastic sleeves. Engineer will return two copies.

C. Initial Manual Submittal: Submit draft copy of each manual at least 30 days before commencing demonstration and training. Engineer will comment on whether general scope and content of manual are acceptable.

D. Final Manual Submittal: Submit each manual in final form prior to requesting inspection for Substantial Completion and at least 15 days before commencing demonstration and training. Engineer will return copy with comments.

PART 2 - PRODUCTS

2.1 OPERATION AND MAINTENANCE DOCUMENTATION DIRECTORY

A. Directory: Prepare a single, comprehensive directory of emergency, operation, and maintenance data and materials, listing items and their location to facilitate ready access to desired information. Include a section in the directory for each of the following:

1. List of documents.
2. List of systems.
3. List of equipment.
4. Table of contents.

B. List of Systems and Subsystems: List systems alphabetically. Include references to operation and maintenance manuals that contain information about each system.

C. List of Equipment: List equipment for each system, organized alphabetically by system. For pieces of equipment not part of system, list alphabetically in separate list.

D. Tables of Contents: Include a table of contents for each emergency, operation, and maintenance manual.

E. Identification: In the documentation directory and in each operation and maintenance manual, identify each system, subsystem, and piece of equipment with same designation used in the Contract Documents. If no designation exists, assign a designation according to ASHRAE Guideline 4, "Preparation of Operating and Maintenance Documentation for Building Systems."

2.2 REQUIREMENTS FOR EMERGENCY, OPERATION, AND MAINTENANCE MANUALS

A. Organization: Unless otherwise indicated, organize each manual into a separate section for each system and subsystem, and a separate section for each piece of equipment not part of a system. Each manual shall contain the following materials, in the order listed:

1. Title page.
2. Table of contents.
3. Manual contents.

B. Title Page: Include the following information:

1. Subject matter included in manual.
2. Name and address of Project.
3. Name and address of Owner.
4. Date of submittal.
5. Name and contact information for Contractor.
6. Name and contact information for Construction Manager.
7. Name and contact information for Engineer.
8. Name and contact information for Commissioning Authority.
9. Names and contact information for major consultants to the Engineer that designed the systems contained in the manuals.
10. Cross-reference to related systems in other operation and maintenance manuals.

C. Table of Contents: List each product included in manual, identified by product name, indexed to the content of the volume, and cross-referenced to Specification Section number in Project Manual.

1. If operation or maintenance documentation requires more than one volume to accommodate data, include comprehensive table of contents for all volumes in each volume of the set.

D. Manual Contents: Organize into sets of manageable size. Arrange contents alphabetically by system, subsystem, and equipment. If possible, assemble instructions for subsystems, equipment, and components of one system into a single binder.

E. Manuals, Electronic Files: Submit manuals in the form of a multiple file composite electronic PDF file for each manual type required.

1. Electronic Files: Use electronic files prepared by manufacturer where available. Where scanning of paper documents is required, configure scanned file for minimum readable file size.
2. File Names and Bookmarks: Enable bookmarking of individual documents based on file names. Name document files to correspond to system, subsystem, and equipment names used in manual directory and table of contents. Group documents for each system and subsystem into individual composite bookmarked files, then create composite manual, so that resulting bookmarks reflect the system, subsystem, and equipment names in a readily navigated file tree. Configure electronic manual to display bookmark panel on opening file.

F. Manuals, Paper Copy: Submit manuals in the form of hard copy, bound and labeled volumes.

1. Binders: Heavy-duty, three-ring, vinyl-covered, loose-leaf binders, in thickness necessary to accommodate contents, sized to hold 8-1/2-by-11-inch paper; with clear plastic sleeve on spine to hold label describing contents and with pockets inside covers to hold folded oversize sheets.

a. If two or more binders are necessary to accommodate data of a system, organize data in each binder into groupings by subsystem and related components. Cross-reference other binders if necessary to provide essential information for proper operation or maintenance of equipment or system.

b. Identify each binder on front and spine, with printed title "OPERATION AND MAINTENANCE MANUAL," Project title or name, and subject matter of contents, and indicate Specification Section number on bottom of spine. Indicate volume number for multiple-volume sets.

2. Dividers: Heavy-paper dividers with plastic-covered tabs for each section of the manual. Mark each tab to indicate contents. Include typed list of products and major components of equipment included in the section on each divider, cross-referenced to Specification Section number and title of Project Manual.
3. Protective Plastic Sleeves: Transparent plastic sleeves designed to enclose diagnostic software storage media for computerized electronic equipment.
4. Supplementary Text: Prepared on 8-1/2-by-11-inch white bond paper.
5. Drawings: Attach reinforced, punched binder tabs on drawings and bind with text.

a. If oversize drawings are necessary, fold drawings to same size as text pages and use as foldouts.
b. If drawings are too large to be used as foldouts, fold and place drawings in labeled envelopes and bind envelopes in rear of manual. At appropriate locations in manual, insert typewritten pages indicating drawing titles, descriptions of contents, and drawing locations.

2.3 EMERGENCY MANUALS

A. Content: Organize manual into a separate section for each of the following:

1. Type of emergency.
2. Emergency instructions.
3. Emergency procedures.

B. Type of Emergency: Where applicable for each type of emergency indicated below, include instructions and procedures for each system, subsystem, piece of equipment, and component:

1. Fire.
2. Flood.
3. Gas leak.
4. Water leak.
5. Power failure.
6. Water outage.
7. System, subsystem, or equipment failure.
8. Chemical release or spill.

C. Emergency Instructions: Describe and explain warnings, trouble indications, error messages, and similar codes and signals. Include responsibilities of Owner's operating personnel for notification of Installer, supplier, and manufacturer to maintain warranties.

D. Emergency Procedures: Include the following, as applicable:

1. Instructions on stopping.
2. Shutdown instructions for each type of emergency.
3. Operating instructions for conditions outside normal operating limits.

4. Required sequences for electric or electronic systems.
5. Special operating instructions and procedures.

2.4 OPERATION MANUALS

A. Content: In addition to requirements in this Section, include operation data required in individual Specification Sections and the following information:

1. System, subsystem, and equipment descriptions. Use designations for systems and equipment indicated on Contract Documents.
2. Performance and design criteria if Contractor has delegated design responsibility.
3. Operating standards.
4. Operating procedures.
5. Operating logs.
6. Wiring diagrams.
7. Control diagrams.
8. Piped system diagrams.
9. Precautions against improper use.
10. License requirements including inspection and renewal dates.

B. Descriptions: Include the following:

1. Product name and model number. Use designations for products indicated on Contract Documents.
2. Manufacturer's name.
3. Equipment identification with serial number of each component.
4. Equipment function.
5. Operating characteristics.
6. Limiting conditions.
7. Performance curves.
8. Engineering data and tests.
9. Complete nomenclature and number of replacement parts.

C. Operating Procedures: Include the following, as applicable:

1. Startup procedures.
2. Equipment or system break-in procedures.
3. Routine and normal operating instructions.
4. Regulation and control procedures.
5. Instructions on stopping.
6. Normal shutdown instructions.
7. Seasonal and weekend operating instructions.
8. Required sequences for electric or electronic systems.
9. Special operating instructions and procedures.

D. Systems and Equipment Controls: Describe the sequence of operation, and diagram controls as installed.

E. Piped Systems: Diagram piping as installed, and identify color-coding where required for identification.

2.5 PRODUCT MAINTENANCE MANUALS

A. Content: Organize manual into a separate section for each product, material, and finish. Include source information, product information, maintenance procedures, repair materials and sources, and warranties and bonds, as described below.

B. Source Information: List each product included in manual, identified by product name and arranged to match manual's table of contents. For each product, list name, address, and telephone number of Installer or supplier and maintenance service agent, and cross-reference Specification Section number and title in Project Manual and drawing or schedule designation or identifier where applicable.

C. Product Information: Include the following, as applicable:

1. Product name and model number.
2. Manufacturer's name.
3. Color, pattern, and texture.
4. Material and chemical composition.
5. Reordering information for specially manufactured products.

D. Maintenance Procedures: Include manufacturer's written recommendations and the following:

1. Inspection procedures.
2. Types of cleaning agents to be used and methods of cleaning.
3. List of cleaning agents and methods of cleaning detrimental to product.
4. Schedule for routine cleaning and maintenance.
5. Repair instructions.

E. Repair Materials and Sources: Include lists of materials and local sources of materials and related services.

F. Warranties and Bonds: Include copies of warranties and bonds and lists of circumstances and conditions that would affect validity of warranties or bonds.

1. Include procedures to follow and required notifications for warranty claims.

2.6 SYSTEMS AND EQUIPMENT MAINTENANCE MANUALS

A. Content: For each system, subsystem, and piece of equipment not part of a system, include source information, manufacturers' maintenance documentation, maintenance procedures, maintenance and service schedules, spare parts list and source information, maintenance service contracts, and warranty and bond information, as described below.

B. Source Information: List each system, subsystem, and piece of equipment included in manual, identified by product name and arranged to match manual's table of contents. For each product, list name, address, and telephone number of Installer or supplier and maintenance service agent, and cross-reference Specification Section number and title in Project Manual and drawing or schedule designation or identifier where applicable.

C. Manufacturers' Maintenance Documentation: Manufacturers' maintenance documentation including the following information for each component part or piece of equipment:

1. Standard maintenance instructions and bulletins.
2. Drawings, diagrams, and instructions required for maintenance, including disassembly and component removal, replacement, and assembly.
3. Identification and nomenclature of parts and components.
4. List of items recommended to be stocked as spare parts.

D. Maintenance Procedures: Include the following information and items that detail essential maintenance procedures:

1. Test and inspection instructions.
2. Troubleshooting guide.
3. Precautions against improper maintenance.
4. Disassembly; component removal, repair, and replacement; and reassembly instructions.
5. Aligning, adjusting, and checking instructions.
6. Demonstration and training video recording, if available.

E. Maintenance and Service Schedules: Include service and lubrication requirements, list of required lubricants for equipment, and separate schedules for preventive and routine maintenance and service with standard time allotment.

1. Scheduled Maintenance and Service: Tabulate actions for daily, weekly, monthly, quarterly, semiannual, and annual frequencies.
2. Maintenance and Service Record: Include manufacturers' forms for recording maintenance.

F. Spare Parts List and Source Information: Include lists of replacement and repair parts, with parts identified and cross-referenced to manufacturers' maintenance documentation and local sources of maintenance materials and related services.

G. Maintenance Service Contracts: Include copies of maintenance agreements with name and telephone number of service agent.

H. Warranties and Bonds: Include copies of warranties and bonds and lists of circumstances and conditions that would affect validity of warranties or bonds.

1. Include procedures to follow and required notifications for warranty claims.

PART 3 - EXECUTION

3.1 MANUAL PREPARATION

A. Operation and Maintenance Documentation Directory: Prepare a separate manual that provides an organized reference to emergency, operation, and maintenance manuals.

B. Emergency Manual: Assemble a complete set of emergency information indicating procedures for use by emergency personnel and by Owner's operating personnel for types of emergencies indicated.

C. Product Maintenance Manual: Assemble a complete set of maintenance data indicating care and maintenance of each product, material, and finish incorporated into the Work.

D. Operation and Maintenance Manuals: Assemble a complete set of operation and maintenance data indicating operation and maintenance of each system, subsystem, and piece of equipment not part of a system.

1. Engage a factory-authorized service representative to assemble and prepare information for each system, subsystem, and piece of equipment not part of a system.
2. Prepare a separate manual for each system and subsystem, in the form of an instructional manual for use by Owner's operating personnel.

E. Manufacturers' Data: Where manuals contain manufacturers' standard printed data, include only sheets pertinent to product or component installed. Mark each sheet to identify each product or component incorporated into the Work. If data include more than one item in a tabular format, identify each item using appropriate references from the Contract Documents. Identify data applicable to the Work and delete references to information not applicable.

1. Prepare supplementary text if manufacturers' standard printed data are not available and where the information is necessary for proper operation and maintenance of equipment or systems.

F. Drawings: Prepare drawings supplementing manufacturers' printed data to illustrate the relationship of component parts of equipment and systems and to illustrate control sequence and flow diagrams. Coordinate these drawings with information contained in record Drawings to ensure correct illustration of completed installation.

1. Do not use original project record documents as part of operation and maintenance manuals.
2. Comply with requirements of newly prepared record Drawings in Section 017839 "Project Record Documents."

G. Comply with Section 017700 "Closeout Procedures" for schedule for submitting operation and maintenance documentation.

END OF SECTION 017823

SECTION 019113 - GENERAL COMMISSIONING REQUIREMENTS

PART 1 - GENERAL

1.1 RELATED DOCUMENTS

A. Drawings and general provisions of the Contract, including General and Supplementary Conditions and other Division 01 Specification Sections, apply to this Section.

1.2 SUMMARY

A. Section Includes:

1. General requirements for coordinating and scheduling commissioning.
2. Commissioning meetings.
3. Commissioning reports.
4. Equipment and systems installation, startup, and field quality-control testing indicated in the Contract Documents.
5. Use of test equipment, instrumentation, and tools for commissioning.
6. System readiness checklists, including, but not limited to, installation checks, startup, performance tests, and performance test demonstration.
7. Commissioning tests and commissioning test demonstration.
8. Work to correct commissioning issues.
9. Work to repeat tests when equipment and systems fail acceptance criteria.
10. Adjusting, verifying, and documenting identified systems and assemblies.

B. Related Requirements:

1. Section 013300 "Submittal Procedures" for submittal procedures requirements for commissioning.
2. Section 017700 "Closeout Procedures" for certificate of Construction Phase Commissioning Completion submittal requirements.
3. Section 017823 "Operation and Maintenance Data" for preliminary operation and maintenance data submittal.
4. Section 220800 "Commissioning of Plumbing" for technical commissioning requirements for plumbing.
5. Section 230800 "Commissioning of HVAC" for technical commissioning requirements for HVAC.
6. Section 260800 "Commissioning of Electrical Systems" for technical commissioning requirements for electrical systems.

1.3 DEFINITIONS

A. Acceptance Criteria: Threshold of acceptable work quality or performance specified for a commissioning activity, including, but not limited to, system readiness checklists, performance tests, performance test demonstrations, commissioning tests and commissioning test demonstrations.

B. Basis-of-Design Document (BoD): A document prepared by Engineer, or Commissioning Authority that records concepts, calculations, decisions, and product selections used to comply with Owner's Project Requirements and to suit applicable regulatory requirements, standards, and guidelines.

C. Commissioning Authority (CxA): An entity engaged by Owner, and identified in Section 011000 "Summary," to evaluate Commissioning-Process Work.

D. Commissioning Plan: A document, prepared by Commissioning Authority, that outlines the organization, schedule, allocation of resources, and documentation requirements of commissioning.

E. Commissioning (Cx): A quality-focused process for verifying and documenting that the facility and all of its systems and assemblies are planned, designed, installed, and tested to comply with Owner's Project Requirements. The requirements specified here are limited to the construction phase commissioning activities. The scope of commissioning is defined in Section 011000 "Summary."

F. Construction Phase Commissioning Completion: The stage of completion and acceptance of commissioning when resolution of deficient conditions and issues discovered during commissioning and retesting until acceptable results are obtained has been accomplished. Owner will establish in writing the date Construction Phase Commissioning Completion is achieved. See Section 017700 "Closeout Procedures" for certificate of Construction Phase Commissioning Completion submittal requirements.

1. Commissioning is complete when the work specified in this Section and related Sections has been completed and accepted, including, but not limited to, the following:
   a. Completion of tests and acceptance of test results.
   b. Resolution of issues, as verified by retests performed and documented with acceptance of retest results.
   c. Comply with requirements in Section 017900 "Demonstration and Training."
   d. Completion and acceptance of submittals and reports.

G. Functional Test: Test of dynamic function of systems, as opposed to components, under full operation in various modes through all control system's sequences of operation using manual (direct observation) or monitoring methods following prescribed test procedures in sequential written form

H. Owner's Project Requirements (OPR): A document that details the functional requirements of a project and the expectations of how it will be used and operated, including Project goals, measurable performance criteria, cost considerations, benchmarks, success criteria, and supporting information.

I. Owner's Witness: Commissioning Authority, Owner's Project Manager, or Engineer-designated witness authorized to authenticate test demonstration data and to sign completed test data forms.

J. Construction or System readiness Checklist: List, provided by Commissioning Authority to installer, of items to inspect and elementary component tests to conduct to verify proper installation of equipment prior to functional testing.

K. Sampling: Functionally testing only a fraction of total number of identical or near identical pieces of equipment.

L. Seasonal Commissioning: Testing of equipment that can be done only during periods of peak heating or cooling, when HVAC equipment is operating at full-load or heavy-load conditions.

M. Simulated Condition: Condition created for purpose of testing response of system.

N. "Systems," "Assemblies," "Subsystems," "Equipment," and "Components": Where these terms are used together or separately, they shall mean "as-built" systems, assemblies, subsystems, equipment, and components.

O. Test: Performance tests, performance test demonstrations, commissioning tests, and commissioning test demonstrations.

P. Trending: Monitoring using building control system.

1.4 COMPENSATION

A. Should Engineer, Commissioning Authority, other Owner's witness, or Owner's staff perform additional services or incur additional expenses due to actions of Contractor listed below, compensate Owner for such additional services and expenses.
1. Failure to provide timely notice of commissioning activities schedule changes.
2. Failure to meet acceptance criteria for test demonstrations.

B. Contractor shall compensate Owner for such additional services and expenses at the rate of $150.00 per labor hour plus $100.00 per round trip plus per diem allowances for meals and lodging according to current U.S. General Services Administration (GSA) Per Diem Rates.

1.5 COMMISSIONING TEAM

A. Members Appointed by Contractor(s):
1. Commissioning Coordinator: A person or entity employed by Contractor to manage, schedule, and coordinate commissioning.
2. Project superintendent and other employees that Contractor may deem appropriate for a particular portion of the commissioning.
3. Subcontractors, installers, suppliers, and specialists that Contractor may deem appropriate for a particular portion of the commissioning.
4. Appointed team members shall have the authority to act on behalf of the entity they represent.

B. Members Appointed by Owner:
1. Commissioning Authority (CxA), plus consultants that CxA may deem appropriate for a particular portion of the commissioning.
a. CxA: Ethos Engineering, Cesar Gonzalez, PE. Cell (956) 564.2827

2. Owner representative(s), facility operations and maintenance personnel, plus other employees, separate contractors, and consultants that Owner may deem appropriate for a particular portion of the commissioning.

3. MEP Engineer, plus employees and consultants that Engineer may deem appropriate for a particular portion of the commissioning.
   a. MEP: Ethos Engineering, Guillermo Quintanilla. Cell (956) 564.2811.

1.6 INFORMATIONAL SUBMITTALS

A. Comply with requirements in Section 013300 "Submittal Procedures" for submittal procedures general requirements for commissioning.

B. Commissioning Plan Information:
   1. List of Contractor-appointed commissioning team members to include specific personnel and subcontractors to the performance of the various commissioning requirements.
   2. Schedule of commissioning activities, integrated with the construction schedule. Comply with requirements in Section 013200 "Construction Progress Documentation" for construction schedule general requirements for commissioning.
   3. Contractor personnel and subcontractors to participate in each test.
   4. List of instrumentation required for each test to include identification of parties that will provide instrumentation for each test.

C. Commissioning schedule.

D. Two-week look-ahead schedules.

E. Commissioning Coordinator Letter of Authority:
   1. Within 10 days after approval of Commissioning Coordinator qualifications, submit a letter of authority for Commissioning Coordinator, signed by a principal of Contractor's firm. Letter shall authorize Commissioning Coordinator to do the following:
      a. Make inspections required for commissioning.
      b. Coordinate, schedule, and manage commissioning of Contractor, subcontractors, and suppliers.
      c. Obtain documentation required for commissioning from Contractor, subcontractors, and suppliers.
      d. Report issues, delayed resolution of issues, schedule conflicts, and lack of cooperation or expertise on the part of members of the commissioning team.

F. Test Reports:
   1. Pre-Startup Report: Prior to startup of equipment or a system, submit signed, completed system readiness checklists.
   2. Test Data Reports: At the end of each day in which tests are conducted, submit test data for tests performed.
   3. Commissioning Issues Reports: Daily, at the end of each day in which tests are conducted, submit commissioning issue reports for tests for which acceptable results were not achieved.
   4. Weekly Progress Report: Weekly, at the end of each week in which tests are conducted, submit a progress report.
   5. Data Trend Logs: Submit data trend logs at the end of the trend log period.
   6. System Alarm Logs: Daily, at the start of days following a day in which tests were performed, submit print-out of log of alarms that occurred since the last log was printed.

G. System readiness checklists:

1. Material checks.
2. Installation checks.
3. Startup procedures, where required.

1.7 CLOSEOUT SUBMITTALS

A. Commissioning Report:
1. At Construction Phase Commissioning Completion, include the following:

a. Pre-startup reports.
b. Test data forms, completed and signed.
c. Commissioning issues report log.
d. Commissioning issues reports showing resolution of issues.
e. Correspondence or other documents related to resolution of issues.
f. Other reports required by commissioning.
g. List unresolved issues and reasons they remain unresolved and should be exempted from the requirements for Construction Phase Commissioning Completion.
h. Report shall include commissioning work of Contractor.

B. Request for Certificate of Construction Phase Commissioning Completion.

C. Operation and Maintenance Data: For proprietary test equipment, instrumentation, and tools to include in operation and maintenance manuals.

1.8 COMMISSIONING TEAM RESPONSIBILITIES

A. COMMISSIONING AUTHORITY: Responsibilities of the CxA during the Construction Phase include the following:
1. Coordinate and direct steps of the total Commissioning Process for systems being installed as part of this contract. Coordinate commissioning work schedule with Owner and Contractor.
2. Provide Commissioning Plan.
3. Attend planning and construction-site meetings as required to obtain information relating to Commissioning Process. Convene commissioning team meetings as required.
4. Plan and conduct commissioning scoping and coordination meetings. Provide notice to all Team members to attend scheduled commissioning meetings.
5. Request all information required for Commissioning Process from manufacturers, Contractor, and Design Professionals.
6. Review Design Professionals' design documents to gain clear understanding of design intent. (Not in scope)
7. Review submittals for compliance with commissioning needs. (Not in scope).
8. Verify that systems and equipment have been installed and started in accordance with manufacturer's recommendations and with generally recognized construction standards, and that documentation of such has been provided.
9. Assist in resolving discrepancies.

10. Prepare System readiness checklists to ensure systems have been installed according to project specifications. Verify that System readiness checklists have been addressed by Contractor and are accurate. Deliver final System readiness checklists to Owner.
11. Prepare Functional Test procedures to demonstrate performance of systems according to project specifications. Observe and document performance of systems, as per process detailed in Functional Test procedures.
12. Verify the execution of commissioning process activities using random sampling. The sampling rate may vary from 1 to 100 percent. Verification will include, but is not limited to, equipment submittals, system readiness checklists, training, operating and maintenance data, tests, and test reports to verify compliance with the OPR. When a random sample does not meet the requirement, the CxA will report the failure in the Issues Log.
13. Prepare and maintain an Issues Log.
14. Compile test data, inspection reports, and certificates; include them in the systems manual and commissioning process report.
15. Review testing and balancing (TAB) reports; notify Owner of deficiencies.
16. Recommend acceptance or non-acceptance of systems to Owner.
17. Verify that Operations and Maintenance (O&M) documentation is acceptable. Operations and Maintenance manuals shall be submitted simultaneously to CxA and to Design Professionals for review. (Not in scope)
18. Verify that training has taken place by collecting training documentation from Contractor.
19. Compile and maintain commissioning record.
20. Provide pre-final and final commissioning reports to all commissioning team members. The report shall include:
    a. Communications between Owner, CxA, Design Professionals, Vendors, and/or Contractor and Subcontractors related to Commissioning Process.
    b. Minutes of commissioning meetings.
    c. Findings and pertinent observations.
    d. A listing of any deficiencies, unresolved issues, and compromises in the environmentally responsive features
    e. Manufacturer's start-up reports.
    f. An Issues Log which:
        1) Describes design, installation, and performance issues which are at variance with the Owner's project requirements and Contract Documents.
        2) Identifies and tracks issues as they are encountered, documenting the status of unresolved and resolved issues.
        3) Documents corrective modifications made.
    g. System readiness checklists.
    h. Testing plans and Functional Test reports.
    i. Listing of off-season test(s) not performed and a schedule for their completion.
21. Conduct an inspection of the building and its systems within 10 months after substantial completion and prior to the expiration of warranties. Prepare a report documenting findings that should be addressed prior to expiration of warranties.

B. CONTRACTOR: Responsibilities of the General Contractor (GC) as related to Commissioning Process include, but are not limited to the following:
1. Facilitate coordination of Commissioning work by CxA.
2. Attend Commissioning meetings or other meetings called by CxA to facilitate the Commissioning Process.
3. Integrate and coordinate commissioning process activities with construction schedule.

4. Review CxA's Functional Test procedures for feasibility, safety, and impact on warranty, and provide CxA with written comment on same.
5. Provide all documentation relating to manufacturer's recommended performance testing of equipment and systems.
6. Provide Operations and Maintenance Data to CxA for preparation of checklists and training manuals.
7. Provide testing and balancing report.
8. Provide As-built drawings and documentation to facilitate Functional Testing.
9. Assure and facilitate participation and cooperation of specialty subcontractors (electrical, mechanical, Building Automation, etc.), and equipment suppliers as required for the Commissioning Process.
10. Require subcontractors to inspect systems installed and fill-out System readiness checklists (provided by CxA) to verify installation has taken place in accordance with manufacturer's instructions, and in a workmanlike manner in accordance with project documents and generally accepted construction practices. Certify to CxA that installation work listed in System readiness checklists has been completed and accompany CxA during verification of completed System readiness checklists.
11. Install systems and equipment in strict conformance with project specifications, manufacturer's recommended installation procedures, and System readiness checklists, as prepared by CxA.
12. Provide data concerning performance, installation, and start-up of systems.
13. Provide copy of manufacturer's filled-out start-up forms for equipment and systems.
14. Ensure systems have been started and fully checked for proper operation prior to arranging for Functional Testing with CxA. Prepare and submit to CxA written certification that each piece of equipment and/or system has been started according to manufacturer's recommended procedure, and that system has been tested for compliance with operational requirements.
    a. GC shall carry out manufacturer's recommended start-up and testing procedures, regardless of whether or not they are specifically listed in CxA's Functional Test procedures.
    b. GC is not relieved of obligation for systems / equipment demonstration where performance testing is required by specifications, but a Functional Performance Test is not specifically designated by CxA.
15. Coordinate with CxA to determine mutually acceptable date of Functional Performance Tests.
16. Review and accept construction checklists provided by the CxA.
17. Direct and coordinate commissioning testing among subcontractors, suppliers, and vendors.
18. Complete commissioning process test procedures.
19. Provide qualified personnel to assist and participate in Commissioning.
20. Provide test instruments and communications devices, as prescribed by CxA and where identified in this specifications manual, as required for carrying out Functional Testing of systems.
21. Evaluate performance deficiencies identified in test reports and, in collaboration with entity responsible for system and equipment installation, recommend corrective action.
22. Cooperate with the CxA for resolution of issues recorded in the Issues Log.
23. Ensure deficiencies found in the Commissioning Process are corrected within the time schedule shown in the CA report.
24. Provide CxA with all submittals, start-up instructions manuals, operating parameters, and other pertinent information related to Commissioning Process. This information shall be

provided directly to the CxA as a digital PDF file at the same time that the submittals are made to the architect and/or engineer.

25. Prepare and submit to CxA proposed Training Program outline for each system.
26. Coordinate and provide training of Owner's personnel. Provide CxA with proposed training agenda no less than 14 days prior to scheduled training sessions. Provide documentation that training took place (including system being trained on, trainer's name and contact information, sign-in sheet verifying who attended training, length of training, and signature of owner's authorized person certifying training took place satisfactorily).
27. Prepare Operation and Maintenance manuals and As-Built drawings in accordance with specifications; submit copy to CxA in addition to other contractually required submissions. Revise and resubmit manuals in accordance with Design Professionals and CxA's comments.
28. All costs associated with the participation of GC, Sub-Contractors, Design Professionals, and Equipment Vendors in the Commissioning Process shall be included as part of the Construction Contract.

C. Subcontractors and vendors shall prepare and submit to Commissioning Authority Manufacturer's installation and performance test procedures to demonstrate performance of systems according to these specifications and checklists prepared by Commissioning Authority.

D. Owner's Representative: Responsibilities of the Owner's Representative as related to Commissioning Process include, but are not limited to the following:
1. Provide the OPR documentation to the CxA and GC for information and use.
2. Assign operation and maintenance personnel and schedule them to participate in commissioning team activities.
3. Provide the BoD documentation, prepared by Engineer and approved by Owner, to the CxA and GC for use in developing the commissioning plan, systems manual, and operation and maintenance training plan.
4. Manage contracts of Engineer and GC.
5. Arrange for facility operating and maintenance personnel to attend various field commissioning activities and field training sessions.
6. Provide final approval for completion of Commissioning Work.
7. Warranty Period: Ensure that seasonal or deferred testing and deficiency issues are addressed.

E. Engineer: Responsibilities of the Engineer as related to Commissioning Process include, but are not limited to the following:
1. Attend commissioning scoping meeting and other commissioning team meetings as requested by Commissioning Authority and as selected by Engineer.
2. Perform normal submittal review, construction observation, record drawing preparation, and operations and maintenance data preparation, as required by Contract Documents.
3. Review Commissioning Authority's submittal review comments and issue directive to GC and/or Design Professionals as deemed applicable. (Not in CxA's scope to review submittals).
4. Coordinate resolution of system deficiencies identified during commissioning, as required by Contract Documents. Review Commissioning Issues Logs and issue directives to GC and/or Design Professionals as applicable.
5. Prepare and submit final as-built design intent documentation for inclusion in Operation and Maintenance Data Manual, and review and approve Operation and Maintenance Data Manual.

6. Review Commissioning Report and issue directive to resolve all outstanding deficiencies prior to project close-out.
7. Warranty Period: Coordinate resolution of design non-conformance and design deficiencies identified during warranty period commissioning.

F. Design Professionals Responsible for Design of Each Portion of Work Being Commissioned:
1. Perform normal submittal review, construction observations, and record drawing preparation, as required by Contract Documents. Perform site observation immediately preceding system startup.
2. Respond to deficiencies identified by Commissioning Authority as directed by Engineer.
3. Provide design narrative and sequence documentation requested by Commissioning Authority. Assist, along with GC, in clarifying operation and control of commissioned equipment in areas where specifications, control drawings, or equipment documentation are not sufficient for writing detailed testing procedures.
4. Attend commissioning scoping meetings and other commissioning team meetings as requested by Commissioning Authority and as selected by Engineer or responsible design professional.
5. Participate in resolution of system deficiencies identified during commissioning, as required by Contract Documents.
6. Prepare and submit final as-built design intent and operating parameters documentation for inclusion in Operation and Maintenance Manual, and review and approve Operation and Maintenance Manual.

PART 2 - PRODUCTS

2.1 TEST EQUIPMENT, INSTRUMENTATION, AND TOOLS

A. Test equipment and instrumentation required to perform the commissioning shall remain the property of Contractor unless otherwise indicated.

2.2 REPORT FORMAT AND ORGANIZATION

A. General Format and Organization:
1. Retain first two subparagraphs below for projects requiring hard-copy submittals; delete for projects requiring only electronic submittals.
2. Bind report in three-ring binders.
3. Label the front cover and spine of each binder with the report title, volume number, project name, Contractor's name, and date of report.
4. Record report on compact disk.
5. Electronic Data: Portable document format (PDF); a single file with outline-organized bookmarks for major and minor tabs and tab contents itemized for specific reports.

B. Commissioning Report:
1. Include a table of contents and an index to each test.
2. Include major tabs for each Specification Section.
3. Include minor tabs for each test.
4. Within each minor tab, include the following:

a. Test specification.
b. Pre-startup reports.
c. Test data forms, completed and signed.
d. Commissioning issue reports, showing resolution of issues, and documentation related to resolution of issues pertaining to a single test. Group data forms, commissioning issue reports showing resolution of issues, and documentation related to resolution of issues for each test repetition together within the minor tab, in reverse chronological order (most recent on top).

PART 3 - EXECUTION

3.1 PREPARATION

A. Review preliminary system readiness checklists and preliminary test procedures and data forms.

3.2 GENERAL

A. Authority
1. The Commissioning Authority carries out the Cx responsibilities as the Owner's authorized agent in accordance with plans, specifications, and contractual requirements.
2. CxA reports deficiencies found to the GC, Engineer and Owner.
3. The Engineer evaluates deficiencies and issues directive to GC to remedy CxA's deficiencies lists, in accordance with contract documents.
4. No change in scope work is to take place without express written consent of Owner. Any deficiencies identified by CxA that are deemed by Engineer to be outside of the scope of work shall be discussed with Owner for consideration.
5. GC and CxA are to copy Engineer on all correspondence related to the commissioning process.

B. Participation In The Commissioning Process
1. GC shall attend meetings related to Commissioning process and arrange for attendance by subcontractors and vendors prior to commissioning of their systems, at the discretion of CxA.
2. Provide skilled technicians to start and test all systems, and place systems in complete and fully functioning service in accordance with contract documents and design intent.
3. Provide skilled technicians, experienced and familiar with systems being commissioned, to assist CxA in commissioning process.
4. Attend initial commissioning team scoping meeting, pre-commissioning meetings specific to each system, and other meetings requested by CxA as required to discuss resolution of deficiencies.
5. Coordinate with sub-Contractors and equipment vendors/representatives to set aside adequate time to address System readiness Checklists, Functional Testing, Operations and Maintenance Training, and associated coordination meetings.

C. Work Prior To Testing
1. A commissioning team scoping meeting shall be held at a time and place designated by Commissioning Authority. Owner, Engineer, Commissioning Authority, Contractor, and Mechanical, Electrical, and Controls Contractors, shall be present at this meeting. The main objectives of the meeting are to familiarize all parties with the requirements of the

commissioning process; to ensure that the responsibilities of each party are clearly understood; and obtain information to develop the preliminary commissioning plan, including:

a. Personnel representing the various entities participating in the process (GC, subcontractors, Owner, Engineer, CxA)
b. Lines of communications;
c. Assignment of responsibilities;
d. Review system readiness checklists;
e. Submittal schedule;
f. Preliminary construction schedule

2. Following the initial commissioning team scoping meeting, and upon reviewing submittals, CxA shall prepare a preliminary Commissioning Plan outlining procedures and responsibilities, including names and contact information of responsible parties, tentative dates for commissioning activities, and system readiness checklists. Preliminary Commissioning Plan shall be distributed to GC and Owner electronically for review and comment. CxA shall modify the Commissioning Plan based on feedback from GC and Owner and will generate a final Cx Plan.
3. Prior to system readiness and functional testing, CxA will conduct site inspections at critical times and issue Cx Field Reports with observations on installation deficiencies so that they may be issued by Engineer as deemed appropriate
4. GC shall complete all phases of the work so the systems can be started, tested, adjusted, balanced, and otherwise commissioned.
5. GC shall verify requirements of Divisions 22, 23 and 26 outlining responsibilities for start-up of equipment with obligations to complete systems, including all sub-systems so that they are fully functional.
6. A minimum of fourteen (14) days prior to date of system readiness performance test, submit to Commissioning Authority for review, detailed description of equipment start-up procedures which GC proposes to perform to demonstrate conformance of systems to specifications and commissioning checklists.
7. Convene system-specific pre-commissioning meetings prior to start of system readiness testing of each system. The GC shall hold a pre-commissioning meeting with all Team members in attendance. The purpose of the meeting is to review the system readiness checklists, and equipment start-up procedures for each system to be commissioned, confirm that systems are ready for testing, and define a schedule for testing activities.

D. System readiness checks and functional performance tests

1. The GC shall provide all materials, services, and labor required to operate equipment and/or system in order to perform the system readiness checks and functional performance tests. A system readiness check or functional performance test shall be aborted if any system deficiency prevents the successful completion of the test or if any participating commissioning team member of which participation is specified is not present for the test. The GC shall reimburse the Owner and A/E for all costs associated with effort lost due to tests that are aborted. These costs shall include salary, travel costs and per diem (where applicable).
2. Functional performance tests may sometimes duplicate the checking, testing, and inspection methods established in related Sections. Where checking, testing, and inspection methods are not specified in other Sections, methods shall be established which will provide required information. Testing and verification required by this section shall be performed during the Commissioning phase. Requirements in related Sections are independent from the requirements of this Section and shall not be used to satisfy any of the requirements specified in this Section without the approval of CxA.

3. Follow start-up and initial checkout procedures listed in article titled "RESPONSIBILITIES" in Part 1, and additional requirements specified in this Section. Divisions 22, 23 and 26 have startup responsibilities and are required to complete systems and sub-systems so systems are fully functional, meeting design requirements of Contract Documents. Commissioning procedures and functional testing do not relieve or lessen this responsibility or shift this responsibility, in whole or in part, to Commissioning Agent or Owner.

E. Work To Resolve Deficiencies
1. Complete corrective work in a timely manner to allow expeditious completion of commissioning process. If deadlines pass without resolution of identified problems, Owner reserves the right to obtain supplementary services and/or equipment to resolve the problem. Costs thus incurred will be GC's responsibility.

3.3 SUSTAINABILITY REQUIREMENTS

A. Comply with requirements listed in specifications and drawings as it relates to sustainability features that will be verified during the Commissioning process.

3.4 SYSTEM READINESS CHECKLISTS

A. General
1. System readiness checklists are important to ensure that equipment and systems are properly connected and operational, and installed in accordance with specifications, drawings, manufacturer's requirements, and all applicable codes.
2. Checklists ensure that functional performance testing (in-depth checkout) may proceed without unnecessary delays.
3. Performance of system readiness checklists, startup, and checkout shall be directed and executed by subcontractor or vendor. Only individuals that have direct knowledge and who witnessed that line item task on system readiness checklist was performed shall initial or check item off.
4. Each piece of equipment and major distribution system receive full system readiness checkout. No sampling strategies are used.
5. System readiness checkout for given system must be successfully completed prior to formal functional performance testing of equipment or subsystems of given system.

B. System readiness Checklist
1. System readiness performance tests shall be documented in a checklist format, as prepared and provided by CxA, for each piece of equipment. Each checklist shall be initialed by GC, verifying that all items on checklist have been addressed and completed.
2. Commissioning System readiness checklists are not to preclude GC from applying his own construction inspection checklists.
3. All system elements shall be checked to verify that they have been installed, adjusted, and calibrated properly, that all connections have been made correctly, and that it is ready to function as specified. Verify that each piece of equipment or system has been checked for proper lubrication, drive rotation, control sequence, and other conditions which may cause damage.
4. Verify that tests, meter readings and specific electrical characteristics agree with those required by equipment or system manufacturer.

5. All discrete elements and sub-systems shall be adjusted and shall be checked for proper operation. Verify wiring and support components for equipment are complete and tested.
6. Do not conduct start-up procedure recommended by equipment/system manufacturer at prior to system readiness testing.
7. Subcontractors shall clearly list outstanding items of initial start-up and system readiness procedures that were not completed successfully at bottom of procedures form or on separate sheet attached to form. Completed forms and attached sheets shall be provided to Commissioning Authority within 2 days of test completion. Installing subcontractor or vendor shall correct deficient or incomplete areas in timely manner and shall submit updated system readiness checklist and startup report with statement of correction on original non-compliance report.
8. When system readiness checklists for a particular system or subsystems are completed, GC will request verification by CxA. GC and subcontractors shall accompany CxA during system readiness checklist verification.
9. If during system readiness checklist verification, CxA finds a significant number of deficiencies, GC shall have all the checklists associated with similar system redone.

3.5 SYSTEM START-UP

A. GC will arrange for start-up of operating equipment and systems after (or at the same time as) system readiness testing and prior to scheduling Functional Testing.

B. Start-up of equipment and systems shall be performed only by a manufacturer's representative, or person(s) who are specifically manufacturer-approved. All start-up personnel shall be trained and authorized, experienced and knowledgeable in the operations of such equipment and systems.

C. Coordinate schedule for start-up of various equipment and systems so that subsystems required for major systems operation are tested first.

D. Manufacturer's start-up reports must be submitted to CxA prior to scheduling Functional Testing.

3.6 FUNCTIONAL TESTING

A. The objective of Functional Testing is to demonstrate that each system is operating according to documented design intent and Contract Documents, through all possible modes of operation.

B. GC and sub-Contractors shall include in his bid proposal all costs associated with preparation and execution of Testing Procedures for all systems to be commissioned.

C. Functional testing is intended to begin upon completion of each system and after system readiness checklists have been completed. Functional testing may proceed prior to completion of systems or sub-systems at discretion of Commissioning Authority. Beginning system testing before completion does not relieve GC from fully completing system, including system readiness checklists as early as possible.

D. GC and sub-Contractors shall provide detailed Testing Procedures that will allow all items on checklists to be verified.

E. Testing shall be conducted under specified operating conditions as recommended or approved by Commissioning Authority.

F. A Functional Performance Test shall be performed on each complete system. Each function shall be demonstrated to the satisfaction of Commissioning Authority in accordance with proposed test procedures developed to demonstrate compliance with specifications.

G. Each Functional Test shall be witnessed and signed off by Commissioning Authority upon satisfactory completion. Functional Test is not to be considered complete until Owner accepts Commissioning Authority's recommendation for completion.

H. All elements of system shall be tested to demonstrate that total systems satisfy all requirements of these specifications. Testing shall be accomplished on hierarchical basis. Test each piece of equipment for proper operation, followed by each subsystem, followed by the entire system, followed by any inter-ties to other major systems.

I. Notification, Scheduling Of Functional Testing and Re-Testing
   1. Notify CxA and Owner, in writing, of request for scheduling Functional Testing. Submit request no fewer than five days prior to desired date for beginning functional testing.
      a. GC must certify that systems and equipment are functioning satisfactorily, according to specifications and design intent, prior to requesting Functional Testing. Upon receipt of such certification, CxA will schedule with GC a time for the particular system test.
         1) CxA will attempt to schedule Functional Testing when convenient for GC and his vendors, and to minimize lost time to GC.
      b. GC will resolve all deficiencies identified during initial test prior to submitting request, in writing, for re-testing. Such request for re-testing shall certify that GC has resolved all deficiencies, or list reason why any deficiencies remain which cannot be resolved.
      c. CxA will re-test to ensure that all deficiencies have been resolved.
         1) Deficiencies that were not detected in first Functional Test, but are discovered in subsequent re-testing, are to be resolved by GC as if they had been discovered in initial testing.

J. Functional Testing Requirements And Procedures
   1. GC and sub-Contractors shall perform tests in the presence of CxA. Tests not witnessed by CxA shall not be considered complete.
   2. To facilitate Functional Testing, when requested by CxA, GC shall provide services of personnel to accompany CxA for the duration of Functional Testing, including any follow-up testing. Such personnel must be experienced, qualified, and intimately familiar with the system being tested.
      a. Participation by representative(s) of direct digital controls (DDC) systems is of particular importance in Functional Testing. All systems which are controlled and/or monitored by DDC are to be thoroughly tested, point by point, through all modes of operation, with the assistance of manufacturer's representative. DDC graphics, setpoints, and programming are to be included as a part of Functional Testing as well.
      b. GC must provide services of personnel to accompany CxA for equipment and systems which may pose particular health and safety concerns, such as boilers.
      c. Should he fail to provide representative to accompany CxA during Functional Testing, GC continues to bear full responsibility for equipment warranty. Owner

and CxA will not be held responsible for damage to equipment, or other actions which might impact warranty, when performing Functional Testing of systems where GC has not provided authorized accompanying representative to operate equipment.

3. Each system shall be operated through all modes of operation including, but not limited to seasonal, occupied, unoccupied, warm-up, cool-down, part-load, and full-load, where system response is specified.
    a. For multiple units, sampling strategy established by Commissioning Authority and subject to approval of Owner may be used.
    b. Verification of each sequence in sequences of operation is required.
    c. Proper responses to such modes and conditions as power failure, freeze condition, low oil pressure, no flow, equipment failure, and the like, shall also be tested.
4. Where possible, inspections carried out on systems by local Authorities Having Jurisdiction (AHJ) may serve as Functional Testing for purposes of Commissioning.
    a. CxA will accompany AHJ during testing procedures required by AHJ.
    b. It is responsibility of GC to arrange for testing by AHJ and to coordinate with CxA to find mutually convenient times for testing. Provide CxA a minimum of four days in advance of intent to schedule testing by AHJ.
    c. CxA will issue a separate report on results of testing.
    d. CxA reserves the right to require additional testing, should testing by AHJ not adequately cover all system components in all modes of operation.
5. Functional Testing is to be dedicated solely to testing of equipment and systems, and not to resolution of deficiencies. Deficiencies identified during testing process must be corrected by GC at a time other than during Functional Testing.
6. Within six days of performing functional test, CxA will issue test report with findings a list of deficiencies that must be addressed by GC or sub-Contractors.
7. Commissioning Authority shall submit a Final Report to Owner recommending acceptance or non-acceptance of individual system components as well as the systems as a whole.

K. Re-Testing And Failure To Remedy Deficiencies
1. Despite GC's best efforts to ensure systems are problem-free, it is expected that some deficiencies will be found during initial inspection of System readiness Checklist, and during initial Functional Testing; such deficiencies are expected to be minimal.
2. It is GC's responsibility to remedy identified deficiencies, both in System readiness Checklist and in Functional Testing phases of work, in a timely and thorough manner.
3. It is GC's responsibility to ensure that all deficiencies are corrected prior to requesting a re-inspection or re-test of systems and equipment. Do not request re-inspection or re-test until deficiencies are corrected.
    a. At his discretion, CxA may agree to re-testing systems or equipment where deficiencies remain which are beyond GC's control to resolve expeditiously.
    b. Typically such re-testing of incomplete systems and equipment will take place only if remaining deficiencies are minor in scope and nature, and are of such nature that they cannot be resolved in a timely manner (such as those due to difficulties in obtaining parts, or where Owner has requested a change that has delayed work, etc.)
4. CxA will carry out a second re-inspection or re-test of systems and equipment subsequent to receiving GC's request.
    a. If CxA finds deficiencies identified in initial inspection or test have not been remedied (with exception of un-resolvable deficiencies noted above), and such

remaining deficiencies are significant enough to require additional inspection or re-testing, GC will be back-charged for CxA's expenses, per Article 1.5.

3.7 DEFERRED TESTING

A. "Seasonal Commissioning" pertains to testing during peak heating or cooling seasons when HVAC equipment is operating at full-load or heavy-load conditions. Initial commissioning will be done as soon as contract work is completed, regardless of season. Seasonal Commissioning under full- or heavy-load conditions other than the current season will be handled at later time by GC and CxA.
   1. If adequate load may be artificially placed upon heating or cooling equipment, CxA, at his discretion, may perform functional testing during non-peak load periods.
   2. GC is to provide services of personnel and participate in seasonal testing process in the same manner as he would in non-seasonal testing.
   3. Until off-season commissioning can be accomplished, Owner may retain an amount from GC's payment sufficient to cover the cost of off-season testing.

B. Unforeseen Deferred Tests: If any check or test cannot be completed due to building structure, required occupancy condition, or other reason, execution of checklists and functional testing may be delayed upon approval of Owner. Tests shall be conducted in same manner as seasonal tests, as soon as possible. Services of required parties will be negotiated. Make final adjustments to Operation and Maintenance Manuals and record drawings due to unforeseen deferred tests.
   1. GC is to provide services of personnel and participate in deferred testing in the same manner as he would for normal commissioning.
   2. Until deferred testing can be accomplished, Owner may retain an amount from GC's payment sufficient to cover the cost of deferred testing.

3.8 TRAINING

A. The following requirements are in addition to operation and maintenance requirements specified elsewhere in this specifications manual. GC shall be responsible for training coordination and scheduling, and ultimately to ensure that training is completed.

B. Scheduling
   1. Organize training to fit Owner's schedule and to optimize the learning experience. Limit continuous sessions to no more than four hours, or otherwise only as approved by Owner and/or Engineer.
   2. Provide an outline of the proposed training agenda for review by Owner and CxA a minimum of 10 days prior to proposed date for training session.
   3. Provide CxA a minimum 5 days advance notice of intent to carry out a training session.
   4. The CxA will not be required to attend all training sessions for building personnel, but will attend selected sessions and monitor progress and content.
   5. No training will take place prior to successful completion of Functional Testing.

C. Training Materials
   1. Develop Training Manuals to meet requirements of individual equipment specification sections.

2. Operating and Maintenance Manuals alone are NOT considered training manuals. O&M Manuals may be used as reference, but shall not be considered to meet requirements for training materials.
3. Develop a detailed outline showing how training program will be organized, including classroom and hands-on training as required by individual specifications sections.
4. Provide with training materials, a quick-reference "how-to" index which will allow operators to easily access information included in Training Manuals and/or O&M Manuals. This reference will include, as a minimum; routine normal operating instructions and sequences. Include regulation, control, stopping, shut-down, and emergency instructions.
5. Refer to individual equipment or system specifications for minimum material to be covered as part of the training program.

D. Documentation
1. All training sessions are to be fully documented. Document:
   a. Basic information on training session (name of system, time, date, and location of training, name of presenter, length of training session, etc.).
   b. Names of persons who attended the training session (provide a sign-in sheet).
   c. Signature from authorized Owner's representative indicating that training took place and was satisfactory.
2. Provide CxA copy of sign-in sheet with training session documentation.

3.9 O&M MANUALS

A. Provide operation and maintenance manuals as specified in section 017700 Closeout Submittals, and as outlined in individual sections of Divisions 22, 23 and 26.

B. Provide CxA with a single copy of Operation and Maintenance Manuals for review. CxA's copy of O&M manuals shall be submitted through Engineer.

C. CxA shall review O&M Manuals and submit comments through the Engineer.

3.10 SYSTEMS TO BE COMMISSIONED

A. Refer to commissioning specifications sections in Related Sections, including the following:
1. 230100 - COMMISSIONING OF MECHANICAL SYSTEMS

END OF SECTION 019113

SECTION 024440 CHAIN LINK FENCES AND GATES

PART 1 GENERAL

1.1 RELATED DOCUMENTS

A. Drawings and general provisions of Contract, including General and Supplementary Conditions and Division 1 Specification Sections, apply to this Section.

1.2 DESCRIPTION OF WORK:

A. Extent of chain link fences and gates is shown on drawings.

1.3 QUALITY ASSURANCE

A. Provide chain link fences and gates as complete units controlled by a single source including necessary erection accessories, fittings, and fastenings.

1.4 SUBMITTALS

A. Submit Product data in the form of manufacturer's technical data, specifications, and installation instructions for metal fencing and gates.

PART 2 PRODUCT

2.1 GENERAL

A. Dimensions shown form pipe, roll formed, and H sections are outside dimensions.

2.2 MANUFACTURERS

A. Galvanized Steel Fencing and Fabric:

Allied Tube and Conduit Corp.
Anchor Fence, Inc.
Colorguard Corp.
Davis Walker Corp.
Dominion Fence and Wire Prod.
United States Steel.

2.3 STEEL FENCING (STFN):

A. Fabric: No. 9 ga. (0.148") finished steel wires, 2" mesh, with top selvages knuckled for fabric 60" high and under, and both top and bottom selvages twisted and barbed for fabric over 60" high. Furnish one-piece fabric widths for fencing up to 12' high.

B. Fabric finish, galvanized, ASTM A392, Class I, with not less than 12 oz. zinc per sq. ft. of surface.

C. Comply with ASTM 668, Class 2, except provide fabric with diameter (gage) of core wire equivalent to fabric diameter specified when measured prior to application of non metallic coating.

2.4 HARDWARE AND ACCESSORIES:

A. Framework: Galvanized steel, ASTM A 120 or A 123, with not less than 1.8 oz. zinc per sq. ft. of surface.

B. End, Corner, and Pull Posts: Minimum sizes and weights as follows:

C. Up to 6 feet fabric height: 2.375 inch OD steel pipe, 3.65 lbs. per lin. ft., or 3.5 inch by 3.5 inch roll formed sections weighing 4.85 lb. per lin. ft.

D. Over 6 feet fabric height: 2.875 inch OD steel pipe, 5.79 lbs. per lin. ft., or 3.5 inch by 3.5 inch roll formed sections weighing 4.85 lbs. per lin. ft.

E. Line posts Space 10' o.c. maximum, unless othewise indicated, of following minimum sizes and weights.

F. Up to 6 feet fabric height: 1.90 inch OD steel pipe, 2.70 lbs. per lin. ft. or 1.875" x 1.625" C sections, 228 lbs. per lin. ft.

G. 6' to 8' fabric height, 2.375" OD steel pipe, 3.65 lbs. per lin. ft. or 2.25" x 1.875" H sections, 2.64 lbs. per lin. ft.

H. Over 8 feet fabric height: 2.875 inch OD steel pipe, 5.79 lbs. per lin. ft. or 2.25" x 1.875" H sections, 3.26 lbs. per lin. ft.

I. Gate Posts: Furnish posts for supporting single gate leaf, or one leaf of a double gate installation, for nominal gate widths as follows:

Leaf Width	Gate Post	Lbs./Lin. Ft.
Up to 6'	3.5" x 3.5" roll formed section or 2.875" OD pipe	4.85 5.79
Over 6' to 13'	4.000" OD pipe	9.11
Over 13' to 18'	6.625" OD pipe	18.97
Over 18'	8.625" OD pipe	28.55

J. Tension Wire: 7 gage, coated coil spring wire, metal finish to match fabric. Locate wire at bottom of fabric.

K. Provide 1.90" O.D. steel pipe at top rail of fencing.

L. Top Rail: Provide 1 -5/8" diameter galvanized steel.

M. Post Brace Assembly: Manufacturer's standard adjustable brace at end and gate posts and at both sides of corner and pull posts, with horizontal brace located at mid height of fabric. Use same material as top rail for brace, and truss to line posts with 0.375"diameter rod and adjustable tightener.

N. Post Tops: Weathertight closure cap for tubular posts. Provide one cap for each post.

O. Stretcher Bars: One piece lengths equal to full height of fabric, with minimum cross section of 3/16" x 3/4". Provide one stretcher bar for each gate and end post, and two for each corner and pull post, except where fabric is integrally woven into post.

P. Corner Bracing: Install diagonal cross bracing consisting of 3/8" diameter adjustable length truss rods on corner posts to ensure frame rigidity without sag or twist, if required.

Q. Stretcher Bar Bands: Space not over 15" oc., to secure stretcher bars to end, corner, pull and gate posts.

2.5 GATES

A. Fabrication: Fabricate gate perimeter frames of 1.90" OD pipe.
Metal and finish to match fence framework. Provide horizontal and vertical members to ensure proper gate operation and attachment of fabric, hardware, and accessories. Space frame member's maximum of 8 feet apart.

B. Assemble gate frames by welding or with special fittings and rivets, for rigid connections. Use same fabric as for fence, unless otherwise indicated. Install fabric with stretcher bars at vertical edges. Bars may also be used at top and bottom edges. Attach stretchers to gate frame at not more than 15" o.c. Attach hardware to provide security against removal or breakage.

C. Install diagonal cross bracing consisting of 3/8" diameter adjustable length truss rods on gates to ensure frame rigidity without sag or twist, if required.

D. Gate Hardware: Furnish the following hardware and accessories for each gate.

E. Hinges: Size and material to suite gate size, non lift off type, offset to permit 180 deg gate opening. Provide 1 1/2 pair of hinges for each leaf over 6 foot nominal height.

F. Latch: Forked type or plunger bar type to permit operation from either side of gate, with padlock eye as integral part of latch.

G. Keeper: Provide keeper for vehicle gates, which automatically engages gate leaf and holds it in open position until manually released.

H. Sliding Gates: Provide manufacturer's standard heavy duty track, ball bearing hanger sheaves, overhead framing and supports, guides, stays, bracing, hardware, and accessories as required.

I. Wire Ties: For tying fabric to line posts, use wire ties spaced 12" o.c. For typing fabric to rails and braces, use wire ties spaced 24" o.c. For tying fabric to tension wire, use hog rings spaced 24" o.c.

J. Manufacturer's standard procedure will be accepted if of equal strength and durability.

K. Concrete: Provide concrete consisting of Portland cement, ASTM C150, aggregates, ASTM C33, and clean water. Mix materials to obtain concrete with a minimum 28 day compressive strength of 2500 psi using at least 4 sacks of cement per cu. yd., 1" maximum size aggregate, maximum 3" slump, and 2% to 4% entrained air.

PART 3 EXECUTION

3.1 INSTALLATION

A. Do not begin installation and erection before final grading is completed, unless otherwise permitted.

B. Excavation: Drill holes for posts to diameters and spacings shown, in firm, undisturbed or compacted soil.

C. If not shown on drawings, excavate holes for each post to minimum diameter recommended by fence manufacturer.

D. Unless otherwise indicated, excavate hole depths approximately 3 inches lower than post bottom, with bottom of posts set not less than 36 inches below finish grade surface.

E. Setting Posts: Center and align posts in holes 3 inches above bottom of excavation.

F. Place concrete around posts and vibrate or tamp for consolidation. Check each post for vertical and top alignment, and hold in position during placement and finishing operations.

G. Center Rails: Provide center rails where shown. Install in one piece between posts and flush with post on fabric side, using special offset fittings where necessary.

H. Brace Assemblies: Install braces so posts are plumb when diagonal rod is under proper tension.

I. Tension Wire: Install tension wires before stretching fabric and tie to each post with not less than 6 ga. galvanized wire. Fasten fabric to tension wire using 11 gage galvanized steel hog rings of spaced 24 inches o.c.

J. Fabric: Leave approximately 2 inches between finish grade and bottom selvage unless otherwise indicated. Pull fabric taut and tie to posts, rails, and tension wires. Install fabric on security side of fence, and anchor to framework so that fabric remains in tension after pulling force is released.

K. Stretcher Bars: Thread through or clamp to fabric 4 inches o.c., and secure to posts with metal bands spaced 15 inches o.c.

L. Gates: Install gates plumb, level, and secure for full opening without interference. Install ground set items in concrete for anchorage as recommended by manufacturer. Adjust hardware for smooth operation and lubricate where necessary.

M. Tie Wires: Use U shaped wire, conforming to diameter of pipe to which attached, clasping pipe and fabric firmly with ends twisted at least 2 full turns. Bend wire to minimize hazard to persons or clothing.

N. Fasteners: Install nuts for tension bands and hardware bolts on side of fence opposite fabric side. Peen ends of bolts or score threads to prevent removal of nuts.

END OF SECTION 024440

SECTION 033000 – CAST-IN-PLACE CONCRETE (LIMITED APPLICATIONS)

PART 1 - GENERAL

1.1 RELATED DOCUMENTS

A. Drawings and general provisions of the Contract, including General and Supplementary Conditions and Division 1 Specification Sections, apply to this Section.

1.2 SUMMARY

A. This Section specifies cast-in-place concrete, including reinforcement, concrete materials, mix design, placement procedures, and finishes.

1.3 SUBMITTALS

A. General: In addition to the following, comply with submittal requirements in ACI 301.

B. Product Data: For each type of manufactured material and product indicated.

C. Design Mixes: For each concrete mix.

1.4 QUALITY ASSURANCE

A. Installer Qualifications: An experienced installer who has completed concrete work similar in material, design, and extent to that indicated for this Project and whose work has resulted in construction with a record of successful in-service performance.

B. Manufacturer Qualifications: A firm experienced in manufacturing ready-mixed concrete products complying with ASTM C 94 requirements for production facilities and equipment.

C. Source Limitations: Obtain each type of cement of the same brand from the same manufacturer's plant, each aggregate from one source, and each admixture from the same manufacturer.

D. Comply with ACI 301, "Specification for Structural Concrete," including the following, unless modified by the requirements of the Contract Documents.
   1. General requirements, including submittals, quality assurance, acceptance of structure, and protection of in-place concrete.
   2. Formwork and form accessories.
   3. Steel reinforcement and supports.
   4. Concrete mixtures.
   5. Handling, placing, and constructing concrete.

PART 2 - PRODUCTS

2.1 FORMWORK

A. Furnish formwork and form accessories according to ACI 301.

2.2 STEEL REINFORCEMENT

A. Reinforcing Bars: ASTM A 615/A 615M, Grade 60, deformed.

2.3 CONCRETE MATERIALS

A. Portland Cement: ASTM C 150, Types I or II or Type I/II.

B. Normal-Weight Aggregate: ASTM C 33, uniformly graded, not exceeding 1.5 in nominal size.

C. Water: Potable and complying with ASTM C 94.

2.4 ADMIXTURES

A. General: Admixtures certified by manufacturer to contain not more than 0.1 percent water-soluble chloride ions by mass of cement and to be compatible with other admixtures. Do not use admixtures containing calcium chloride.

B. Air-Entraining Admixture: ASTM C 260.

2.5 RELATED MATERIALS

A. Joint-Filler Strips: ASTM D 1751, asphalt-saturated cellulosic fiber, or ASTM D 1752, cork or self-expanding cork.

2.6 CURING MATERIALS

A. Evaporation Retarder: Waterborne, monomolecular film forming, manufactured for application to fresh concrete.

B. Absorptive Cover: AASHTO M 182, Class 2, burlap cloth made from jute or kenaf, weighing approximately 9 oz./sq. yd. dry.

C. Moisture-Retaining Cover: ASTM C 171, polyethylene film or white burlap-polyethylene sheet.

D. Water: Potable.

E. Clear, Solvent-Borne, Membrane-Forming Curing Compound: ASTM C 309, Type 1, Class B.

F. Clear, Waterborne, Membrane-Forming Curing and Sealing Compound: ASTM C 1315, Type 1, Class A.

2.7 CONCRETE MIXES

A. Comply with ACI 301 requirements for concrete mixtures.

B. Prepare design mixes, proportioned according to ACI 301, for normal-weight concrete determined by either laboratory trial mix or field test data bases, as follows:
1. Compressive Strength (28 Days): 3000 psi.
2. Slump: 2 inch minimum to 5 inch maximum.

C. Add air-entraining admixture at manufacturer's prescribed rate to result in concrete at point of placement having an air content of 6.0 percent within a tolerance of plus 1.0 or minus 1.5 percent.

1. Air content of trowel-finished interior concrete floors shall not exceed 3.0 percent.

2.8 CONCRETE MIXING

A. Ready-Mixed Concrete: Comply with ASTM C 94 and ASTM C 1116.

1. When air temperature is between 85 and 90 deg F, reduce mixing and delivery time from 1-1/2 hours to 75 minutes; when air temperature is above 90 deg F, reduce mixing and delivery time to 60 minutes.

PART 3 - EXECUTION

3.1 FORMWORK

A. Design, construct, erect, shore, brace, and maintain formwork according to ACI 301.

3.2 STEEL REINFORCEMENT

A. Comply with CRSI's "Manual of Standard Practice" for fabricating, placing, and supporting reinforcement.

1. Do not cut or puncture vapor retarder. Repair damage and reseal vapor retarder before placing concrete.

3.3 JOINTS

A. General: Construct joints true to line with faces perpendicular to surface plane of concrete.

B. Construction Joints: Locate and install so as not to impair strength or appearance of concrete, at locations indicated or as approved by Engineer.

3.4 CONCRETE PLACEMENT

A. Comply with recommendations in ACI 304R for measuring, mixing, transporting, and placing concrete.

B. Consolidate concrete with mechanical vibrating equipment.

3.5 FINISHING FORMED SURFACES

A. Smooth-Formed Finish: As-cast concrete texture imparted by form-facing material, arranged in an orderly and symmetrical manner with a minimum of seams. Repair and patch tie holes and defective areas. Completely remove fins and other projections.

1. Apply to concrete surfaces exposed to public view or to be covered with a coating or covering material applied directly to concrete, such as waterproofing, dampproofing, veneer plaster, or painting.

3.6 TOLERANCES

A. Comply with ACI 117, "Specifications for Tolerances for Concrete Construction and Materials."

3.7 CONCRETE PROTECTION AND CURING

A. General: Protect freshly placed concrete from premature drying and excessive cold or hot temperatures. Comply with ACI 306.1 for cold-weather protection, and follow recommendations in ACI 305R for hot-weather protection during curing.

B. Evaporation Retarder: Apply evaporation retarder to concrete surfaces if hot, dry, or windy conditions cause moisture loss approaching 0.2 lb/sq. ft. x h before and during finishing operations. Apply according to manufacturer's written instructions after placing, screeding, and bull floating or darbying concrete, but before float finishing.

C. Begin curing after finishing concrete, but not before free water has disappeared from concrete surface.

D. Curing Methods: Cure formed and unformed concrete for at least seven days by moisture curing, moisture-retaining-cover curing, curing compound, or a combination of these as follows:

1. Moisture Curing: Keep surfaces continuously moist for not less than seven days.
2. Moisture-Retaining-Cover Curing: Cover concrete surfaces with moisture-retaining cover for curing concrete, placed in widest practicable width, with sides and ends lapped at least 12 inches, and sealed by waterproof tape or adhesive. Immediately repair any holes or tears during curing period using cover material and waterproof tape.
3. Curing Compound: Apply uniformly in continuous operation by power spray or roller according to manufacturer's written instructions. Recoat areas subjected to heavy rainfall within three hours after initial application. Maintain continuity of coating and repair damage during curing period.

3.8 FIELD QUALITY CONTROL

A. Testing Agency: Owner may engage a qualified independent testing and inspecting agency to sample materials, perform tests, and submit test reports during concrete placement. Tests will be performed according to ACI 301.

1. Testing Frequency: Obtain at least 3 cylinders for each 50 cu. yd. or fraction thereof of each concrete mix placed each day.

3.9 REPAIRS

A. Remove and replace concrete that does not comply with requirements in this Section.

END OF SECTION 033000

SECTION 077200 - ROOF ACCESSORIES

PART 1 - GENERAL

1.1 RELATED DOCUMENTS

A. Drawings and general provisions of the Contract, including General and Supplementary Conditions and Division 1 Specification Sections, apply to this Section.

1.2 SUMMARY

A. This Section includes the following: Factory fabricated roof curbs. Coordinate with Structural.

1.3 SUBMITTALS

A. Product Data: For each type of product indicated. Include construction details, materials, dimensions of individual components and profiles, and finishes.

B. Coordination Drawings: Roof plans drawn to scale and coordinating penetrations and roof-mounted items. Show the following:
1. Size and location of roof accessories specified in this Section.
2. Method of attaching roof accessories to roof or building structure.
3. Other roof-mounted items including mechanical and electrical equipment, ductwork, piping, and conduit.
4. Coordinate dimensions with shop drawings of equipment to be supported.

1.4 QUALITY ASSURANCE

A. Substitutions: Requests for substitution shall be submitted in writing at least 10 days prior to bid date and shall be accompanied by product literature and samples. No substitution will be permitted after bid date.

B. Standards: Comply with the following:
1. SMACNA's "Architectural Sheet Metal Manual" details for fabrication of units, including flanges and cap flashing to coordinate with type of roofing indicated.
2. NRCA's "Roofing and Waterproofing Manual" details for installing units.

PART 2 - PRODUCTS

2.1 MATERIALS, GENERAL

A. G-90 galvanized steel with paint-grip coating.

B. Insulation: Manufacturer's standard rigid or semirigid glass-fiber board of 2" thickness, 1-1/2lb density, R8 value.

C. Wood Nailers: Softwood lumber, pressure treated with waterborne preservatives for aboveground use, complying with AWPA C2; not less than 1-1/2 inches thick.

D. Fasteners: Stainless steel metal as recommended by manufacturer. Match finish of exposed fasteners with finish of material being fastened.

E. Gaskets: Manufacturer's standard tubular or fingered design of neoprene, EPDM, or PVC; or flat design of foam rubber, sponge neoprene, or cork.

F. Bituminous Coating: SSPC-Paint 12, solvent-type bituminous mastic, nominally free of sulfur and containing no asbestos fibers, compounded for 15-mil dry film thickness per coating.

G. Mastic Sealant: Polyisobutylene; nonhardening, nonskinning, nondrying, nonmigrating sealant.

H. Elastomeric Sealant: Generic type recommended by unit manufacturer that is compatible with joint surfaces; ASTM C 920, Type S, Grade NS, Class 25, and Uses NT, G, A, and, as applicable to joint substrates indicated, O.

I. Roofing Cement: ASTM D 4586, nonasbestos, fibrated asphalt cement designed for trowel application or other adhesive compatible with roofing system.

2.2 ROOF CURBS

A. General: Provide roof curbs capable of supporting superimposed live and dead loads, including equipment loads and other construction to be supported on roof curbs. Coordinate dimensions with rough-in information or Shop Drawings of equipment to be supported.

B. Fabrication: Unless otherwise indicated or required for strength, fabricate units from minimum 16 gauge, galvanized steel with paint grip coating, with welded corners and with seams joined by continuous water and air-tight welds. Tack or spot welding is unacceptable.
1. All external welds shall be prepared and coated with corrosion inhibitor compound.
2. Curb and curb adapter walls shall be insulated with 1-1/2" thick, three-pound density insulation. Exposed edges shall be encapsulated to ensure no insulation erodes into the air stream. Insulation shall be either foil faced or coated with antimicrobial coating such that the fibers are not airborne over the life of the building.
3. Provide preservative-treated wood nailers at tops of curbs and formed flange at perimeter bottom for mounting to roof.
4. Provide formed cants and base profile coordinated with roof insulation thickness.
5. The Manufacturer shall limit static pressure gain to .25 inches/water gauge
6. Fabricate units to minimum height of 18 inches, unless otherwise indicated.
7. Changes in airflow direction to be accomplished by 90-degree elbows with turning vanes.
8. Curb shall be manufactured in one piece except when width exceeds 108". If width exceeds 108", the curb shall be designed with prefabricated joints for ease of installation. It will be manufactured in separate pieces with the number and length of the pieces determined by the total length of the unit. The Manufacturer shall supply drawings for assembly and installation.
9. Curb shall provide full support of the new unit and shall include 3/8" gasketing.
10. Counter flashing shall extend over the original curb a minimum of 1" and be welded and weatherproof.

2.3 FINISHES, GENERAL

A. Surface preparation: Oil, grease and other deposits of surface contamination shall be removed by solvent or detergent washing. All surfaces must be clean, dry and free of any dirt, dust, grease, oil or other deleterious materials prior to coating. Care shall be taken to ensure surfaces remain clean before and during coating process.

B. Application system:
   1. Coating shall provide a standard 5 year manufacturer's limited warranty.
   2. Finish metal surfaces with a corrosion protection system equal to the following:
      a. Energy Guard ZRU Primer. Finish coat shall consist of EnergyGuard DCC Cabinet Casing polyurethane coating. Coatings shall be applied by a certified applicator and shall result in a finish with an ASTMB117-90 salt spray rating of 10,000 hours.
      b. Prime coat of ICI Devran 201 Universal Epoxy Primer to thickness of not less than 3.o mils DFT (dry film thickness) nor more than 8.0 mils DFT. Minimum recoat time for Devran 201 Universal Epoxy Primer is 3.5 hours at 77 F with 80% RH. Finish coat shall consist of Devthane 379 UVA Aliphatic Urethane Gloss Enamel applied to thickness of not less than 1.0 mils DFT nor more than 5.0 mils DFT.

PART 3 - EXECUTION

3.1 INSTALLATION

A. General: Comply with manufacturer's written instructions. Coordinate installation of roof accessories with installation of roof deck, roof insulation, flashing, roofing membranes, penetrations, equipment, and other construction involving roof accessories to ensure that each element of the Work performs properly and that combined elements are waterproof and weather tight. Anchor roof accessories securely to supporting structural substrates so they are capable of withstanding lateral and thermal stresses, and inward and outward loading pressures.

B. Separation: Separate metal from incompatible metal or corrosive substrates, including wood, by coating concealed surfaces, at locations of contact, with bituminous coating or providing other permanent separation.

C. Flange Seals: Unless otherwise indicated, set flanges of accessory units in a thick bed of roofing cement to form a seal.

D. Cap Flashing: Where required as component of accessory, install cap flashing to provide waterproof overlap with roofing or roof flashing (as counter flashing). Seal overlap with thick bead of mastic sealant.

E. Operational Units: Test-operate units with operable components. Clean and lubricate joints and hardware. Adjust for proper operation.

3.2 CLEANING AND PROTECTION

A. Clean exposed surfaces according to manufacturer's written instructions. Touch up damaged metal coatings.

END OF SECTION 077200

SECTION 077300 - WIND LOAD RATED ROOF CURBS AND RESTRAINT BRACKETS

PART 1 - GENERAL

1.1 RELATED DOCUMENTS

A. Drawings and general provisions of the Contract, including General and Supplementary Conditions and Division 1 Specification Sections, apply to this Section.

1.2 SUMMARY

A. Design, construct, furnish and install roof curbs and curb adapters, brackets and related items to meet governing building codes, as demonstrated by comprehensive analysis that the load resisting capabilities meet or exceed requirements.

1.3 QUALITY ASSURANCE

A. Meet requirements of the International Building Code, ASCE Std 7, TDI, and other applicable codes for the location. This specification shall be a minimum requirement for wind load design consideration, and is not intended as a substitute for legislated, more stringent, national, state or local requirements.

B. Wind-induced forces shall be determined by governing code requirements.
   1. Wind-generated force shall be reduced into an equivalent statically applied force.
   2. The statically applied force shall act in horizontal and vertical directions at the center of gravity of the rooftop mounted equipment, resulting in torsion, flexure, tension and shear forces that the wind restraint brackets shall be shown to be able to resist.

C. Install products in strict accordance with applicable codes and manufacturers' standards. Whenever a conflict occurs between the manufacturers or construction standards, the most stringent shall apply.

1.4 SUBMITTALS

A. Manufacturer's statement showing that the curbs and wind load restraint brackets meet the applicable code requirements, signed and sealed by a licensed professional engineer (PE). Provide the following:
   1. Wind restraint calculations for all connections of rooftop-mounted equipment to roof curb, and roof curb to the structure.
   2. Drawings showing curbs, wind restraint bracket dimensions, make and model compatible with rooftop unit, including type of connection hardware required.

SECTION 077300 - WIND LOAD RATED ROOF CURBS AND RESTRAINT BRACKETS

PART 2 - PRODUCTS

2.1 ROOF CURBS AND RESTRAINTS

A. Approved manufacturers of roof curbs and wind load restraint brackets:
   1. Curbs Plus, Complete Curbs, Thybar Corporation.
   2. Others shall obtain a written pre-approval one week prior to bidding.

B. Products shall be made of a material (Prime G-90 galvanized steel or galvalume) compatible with roof curb and the rooftop unit base-rail material. Dissimilar metals shall not to be used.
   1. Fully welded mitered corners for wind load consideration
   2. Base flange attachments for securing curb to structure.
   3. Factory installed wood nailer for attachment of roofing material.

PART 3 - EXECUTION

3.1 INSTALLATION

A. Install in accordance with manufacturer's written instructions.

B. Attach rooftop equipment to roof curbs with wind load restraint brackets of size, type and quantity as determined by equipment manufacturer.

C. Attach roof curb to the building structure at the curb base flanges. Base flange attachment options include anchor bolts, welded connections and mechanical fasteners.

D. Do not install wind load restraint brackets in a manner that will result in inadequate maintenance access, base-rail damage, or roof curb reduced weight carrying capacity.

E. Prior to performing installation of restraint brackets, notify Engineer of any conflicts with other trades or equipment that may result in undesirable contact due to inadequate space or other unforeseen conditions. Notify Engineer of any discrepancies between the specifications and field conditions or changes required due to specific equipment selection prior to installation.

F. Corrective work necessitated by discrepancies or conflicts after installation shall be at the contractor's expense.

3.2 INSPECTION

A. On completion of installation, inspect the completed system and report in writing any installation error or other faults in the system that could affect the wind load resistant capabilities of the roof top assembly.

B. The Contractor shall submit a report to the project designer, including the above report with consequent steps taken to properly complete the wind load restraint installation.

END OF SECTION 077300

SECTION 099000 – PAINTING

PART 1 - GENERAL

1.1 RELATED DOCUMENTS

A. Drawings and general provisions of the Contract, including General and Supplementary Conditions and Division 1 Specification Sections, apply to this Section.

1.2 SUMMARY

A. This Section includes surface preparation and field painting of the following:
   1. Piping and piping accessories and supports
   2. Exposed ductwork and accessories

B. Paint exposed surfaces, except where the paint schedules indicate that a surface or material is not to be painted or is to remain natural. If the paint schedules do not specifically mention an item or a surface, paint the item or surface the same as similar adjacent materials or surfaces whether or not schedules indicate colors. If the schedules do not indicate color or finish, the Engineer will select from standard colors and finishes available.

   1. Painting includes field painting of exposed bare and covered pipes (including color coding), hangers, exposed steel and iron work, and primed metal surfaces of mechanical and electrical equipment.

C. Do not paint prefinished items, concealed surfaces, finished metal surfaces, operating parts, and labels.

   1. Operating parts include moving parts of operating equipment and the following:

      a. Valve and damper operators.
      b. Linkages.
      c. Sensing devices.
      d. Motor and fan shafts.

   2. Labels: Do not paint over Underwriters Laboratories (UL), Factory Mutual (FM), or other code-required labels or equipment name, identification, performance rating, or nomenclature plates.

1.3 SUBMITTALS

A. Product Data: For each paint system specified. Include block fillers and primers.

   1. Material List: Provide an inclusive list of required coating materials. Indicate each material and cross-reference specific coating, finish system, and application. Identify each material by manufacturer's catalog number and general classification.

B. Samples for Initial Selection: Manufacturer's color charts showing the full range of colors available for each type of finish-coat material indicated.

1.4 QUALITY ASSURANCE

A. Source Limitations: Obtain primers, and undercoat materials for each coating system from the same manufacturer as the finish coats.

1.5 DELIVERY, STORAGE, AND HANDLING

A. Deliver materials to the Project Site in manufacturer's original, unopened packages and containers bearing manufacturer's name and label.

B. Store materials not in use in tightly covered containers in a well-ventilated area at a minimum ambient temperature of 45 deg F. Maintain containers used in storage in a clean condition, free of foreign materials and residue.

1.6 PROJECT CONDITIONS

A. Apply paints only when the temperature of surfaces to be painted and surrounding air temperatures are between 50 and 90 deg F.

B. Do not apply paint in rain, fog, or mist; or when the relative humidity exceeds 85 percent; or at temperatures less than 5 deg F above the dew point; or to damp or wet surfaces.

1. Painting may continue during inclement weather if surfaces and areas to be painted are enclosed and heated within temperature limits specified by manufacturer during application and drying periods.

PART 2 - PRODUCTS

2.1 MANUFACTURERS

A. Manufacturers Names: The following manufacturers are referred to in the paint schedules by use of shortened versions of their names, which are shown in parentheses:
1. Glidden Co. (The) (Glidden).
2. Sherwin-Williams Co. (S-W).

2.2 PAINT MATERIALS, GENERAL

A. Material Compatibility: Provide primers, undercoats, and finish-coat materials that are compatible with one another and the substrates indicated under conditions of service and application, as demonstrated by manufacturer based on testing and field experience.

B. Material Quality: Provide manufacturer's best-quality paint material of the various coating types specified. Paint-material containers not displaying manufacturer's product identification will not be acceptable.

C. Colors: Match colors indicated by reference to manufacturer's color designations.
1. Condenser Water: To be coordinated with Owner.

PART 3 - EXECUTION

3.1 EXAMINATION

A. Examine substrates, areas, and conditions, with the Applicator present, under which painting will be performed for compliance with paint application requirements.

1. Do not begin to apply paint until unsatisfactory conditions have been corrected and surfaces receiving paint are thoroughly dry.

3.2 PREPARATION

A. General: Remove hardware and hardware accessories, plates, machined surfaces, lighting fixtures, and similar items already installed that are not to be painted. If removal is impractical or impossible because of the size or weight of the item, provide surface-applied protection before surface preparation and painting.

1. After completing painting operations in each space or area, reinstall items removed using workers skilled in the trades involved.

B. Cleaning: Before applying paint or other surface treatments, clean the substrates of substances that could impair the bond of the various coatings. Remove oil and grease before cleaning.

1. Schedule cleaning and painting so dust and other contaminants from the cleaning process will not fall on wet, newly painted surfaces.

C. Surface Preparation: Clean and prepare surfaces to be painted according to manufacturer's written instructions for each particular substrate condition and as specified.

1. Provide barrier coats over incompatible primers or remove and reprime.

2. Ferrous Metals: Clean ungalvanized ferrous-metal surfaces that have not been shop coated; remove oil, grease, dirt, loose mill scale, and other foreign substances. Use solvent or mechanical cleaning methods that comply with the Steel Structures Painting Council's (SSPC) recommendations.

   a. Blast steel surfaces clean as recommended by paint system manufacturer and according to requirements of SSPC-SP 10.
   b. Treat bare and sandblasted or pickled clean metal with a metal treatment wash coat before priming.
   c. Touch up bare areas and shop-applied prime coats that have been damaged. Wire-brush, clean with solvents recommended by paint manufacturer, and touch up with the same primer as the shop coat.

3. Galvanized Surfaces: Clean galvanized surfaces with nonpetroleum-based solvents so surface is free of oil and surface contaminants. Remove pretreatment from galvanized sheet metal fabricated from coil stock by mechanical methods.

D. Materials Preparation: Mix and prepare paint materials according to manufacturer's written instructions.

1. Maintain containers used in mixing and applying paint in a clean condition, free of foreign materials and residue.
2. Stir material before application to produce a mixture of uniform density. Stir as required during application. Do not stir surface film into material. If necessary, remove surface film and strain material before using.
3. Use only thinners approved by paint manufacturer and only within recommended limits.

3.3 APPLICATION

A. General: Apply paint according to manufacturer's written instructions. Use applicators and techniques best suited for substrate and type of material being applied.

1. Paint colors, surface treatments, and finishes are indicated in the schedules.
2. Do not paint over dirt, rust, scale, grease, moisture, scuffed surfaces, or conditions detrimental to formation of a durable paint film.
3. Provide finish coats that are compatible with primers used.
4. Paint surfaces behind movable equipment and furniture the same as similar exposed surfaces. Before the final installation of equipment, paint surfaces behind permanently fixed equipment or furniture with prime coat only.
5. Sand lightly between each succeeding enamel or varnish coat.

B. Scheduling Painting: Apply first coat to surfaces that have been cleaned, pretreated, or otherwise prepared for painting as soon as practicable after preparation and before subsequent surface deterioration.

1. The number of coats and the film thickness required are the same regardless of application method. Do not apply succeeding coats until the previous coat has cured as recommended by the manufacturer. If sanding is required to produce a smooth, even surface according to manufacturer's written instructions, sand between applications.
2. Omit primer on metal surfaces that have been shop primed and touchup painted.
3. If undercoats, stains, or other conditions show through final coat of paint, apply additional coats until paint film is of uniform finish, color, and appearance. Give special attention to ensure edges, corners, crevices, welds, and exposed fasteners receive a dry film thickness equivalent to that of flat surfaces.
4. Allow sufficient time between successive coats to permit proper drying. Do not recoat surfaces until paint has dried to where it feels firm, does not deform or feel sticky under moderate thumb pressure, and where application of another coat of paint does not cause the undercoat to lift or lose adhesion.

C. Application Procedures: Apply paints and coatings by brush, roller, spray, or other applicators according to manufacturer's written instructions.

D. Minimum Coating Thickness: Apply paint materials no thinner than manufacturer's recommended spreading rate. Provide the total dry film thickness of the entire system as recommended by the manufacturer.

E. Mechanical and Electrical Work: Painting of mechanical and electrical work is limited to items exposed in equipment rooms and in occupied spaces.

F. Mechanical items to be painted include, but are not limited to, the following:
   1. Piping, pipe hangers, accessories and supports.
   2. Exposed ductwork, plenums, accessories and supports.

G. Prime Coats: Before applying finish coats, apply a prime coat of material, as recommended by the manufacturer, to material that is required to be painted or finished and that has not been prime coated by others. Recoat primed and sealed surfaces where evidence of suction spots or unsealed areas in first coat appears, to ensure a finish coat with no burn through or other defects due to insufficient sealing.

H. Stipple Enamel Finish: Roll and redistribute paint to an even and fine texture. Leave no evidence of rolling, such as laps, irregularity in texture, skid marks, or other surface imperfections.

I. Completed Work: Match approved samples for color, texture, and coverage. Remove, refinish, or repaint work not complying with requirements.

3.4 CLEANING

A. Cleanup: At the end of each workday, remove empty cans, rags, rubbish, and other discarded paint materials from the site.

3.5 PROTECTION

A. Protect work of other trades, whether being painted or not, against damage by painting. Correct damage by cleaning, repairing or replacing, and repainting, as approved by Engineer.

B. Provide "Wet Paint" signs to protect newly painted finishes. Remove temporary protective wrappings provided by others to protect their work after completing painting operations.

3.6 PAINT SCHEDULE

A. Ferrous Metal: Semi-Gloss, Alkyd-Enamel Finish: 2 finish coats over an enamel undercoat and primer.
   1. Primer: Quick-drying, rust-inhibitive, alkyd-based or epoxy-metal primer, as recommended by the manufacturer for this substrate, applied at spreading rate recommended by the manufacturer to achieve a total dry film thickness of not less than 1.5 mils. S-W: Kem Kromik Universal Metal Primer B50NZ6/B50WZ1.
   2. Undercoat: As recommended by the manufacturer for this substrate, applied at spreading rate recommended by the manufacturer to achieve a total dry film thickness of not less than 1.2 mils. S-W: High-Solids Poly-Urethane Semi-Gloss B65 350 Series, with Hardner: B60V30.
   3. Finish Coat: Same as undercoat. Semi-gloss, applied at spreading rate recommended by the manufacturer to achieve a total dry film thickness of not less than 1.2 mils

SECTION 099000 – PAINTING

END OF SECTION 099000

SECTION 220010 – SUMMARY OF PLUMBING WORK

PART 1 - GENERAL

1.1 RELATED DOCUMENTS

A. Drawings and general provisions of the Contract, including General and Supplementary Conditions and other Division 22 Specification Sections, apply to this Section.

1.2 WORK COVERED BY CONTRACT DOCUMENTS

A. The following Summary of Work is intended as an aid to achieve an understanding of the various elements of work included in the project, and is not intended to be all-inclusive. Detailed descriptions of work and requirements are given in drawings and specifications.

B. Contract Documents were prepared for the Project by:
Ethos Engineering,
1126 South Commerce Street
Harlingen, Texas 78550
Phone Number: (956) 230-3435

C. Scope of Work: Refer to drawings for a detailed Scope of Work.

1. Provide all materials and labor associated with new fully-operational plumbing systems for the project "HVAC Upgrades at Brownsville Animal Regulation and Care Facility", including but not limited to the following:

a. Extension of site utilities including domestic water and sewer piping to serve the new chiller plant.
b. Plumbing fixtures and appliances such as backflow preventers, pressure reducers, condensate drains, floor drains, valves, fittings, hardware and specialties.
c. Potable water distribution piping and service connections to site utilities.
d. Sanitary wastewater and vent piping and service line connections to site utilities.
e. Painting: See Division 9 specifications. Paint all exposed piping, insulation, hangers, accessories in interior exposed areas. Paint exterior pipe supports. Coordinate paint type, color and scope of work with Engineer.

1.3 ALLOWANCES

A. See Division 0 Specifications.

1.4 COORDINATION

A. All plumbing work shall be done under sub-contract to a General Contractor. Plumbing Contractor shall coordinate all work through General Contractor, who is ultimately responsible for the entire project.

B. Prior to bidding, Plumbing Contractor shall coordinate all work in Division-22 for integration with civil work, mechanical work, electrical work, irrigation work and general construction. A detailed list of inclusion and exclusions shall be provided to General Contractors at least three days prior to the end of the period set aside to request clarifications so that coordination of any missing items may be addressed and clarified by Engineer as needed.

1. Coordinate water line diameter, tap size, meter size and backflow preventer size with MEP Engineer. While meter size may be smaller, water line diameter, tap, backflow preventer sizes shall match or be larger than the connection sizes shown on Plumbing drawings. If the distance from the water mains is too large, contact Civil Engineer and MEP Engineer for assistance in upsizing line, valve sizes to minimize pressure drops. Coordinate details with Engineer.

C. All electrical work required for operation of plumbing systems shall be coordinated through the General Contractor prior to bidding to ensure that all starters, disconnects, conduit and wiring are provided as part of the project. All components needed for a full operational installation of systems shall be provided.

D. All Building Automation Systems (BAS) required for operation of plumbing systems shall be coordinated through the General Contractor prior to bidding, to ensure that all equipment, materials, valves, sensors, devices and labor are provided as part of the project. All components needed for a full operational installation of systems shall be provided.

E. Plumbing Contractor shall coordinate and supervise installation of all controls systems, and coordinate with electrical contractors and equipment suppliers as needed. All components needed for a full operational installation of systems shall be provided.

F. Contractor shall coordinate with other divisions for power and control of plumbing systems. It is not the intent of this specification to dictate who will conduct work, only to state the requirements of conducting the work.

G. Cooperate fully with other contractors so that work under those contracts may be carried out smoothly, without interfering with or delaying work under this Contract.

H. Coordinate with Div. 1 for work sequence and optimization of construction schedule.

I. Coordinate with Div. 23 for Mechanical System.

J. Coordinate with Div. 26 electrical contractor for providing power to plumbing equipment, and for Fire Alarm Systems interface with plumbing systems.

K. Issue written notification of the following tasks and allow five (5) days for Engineer to respond and schedule an inspection as required. Failure to issue written notification may result in work having to be redone to allow for proper inspection. It is contractor's responsibility to make sure Engineer receives notification.

1. Upon completion of underground piping installation and prior to testing or covering up.
2. Upon completion of all water piping installation and prior to insulation and/or testing.
3. Upon completion of ductwork and prior to testing and insulating.
4. Above ceiling inspections prior to ceiling tile installation.
5. When ready to request manufacturer's start-up of each piece of equipment.
6. When ready for Substantial Completion Inspection.
7. When ready for Final Inspection.

L. General

1. The Contractor shall execute all work hereinafter specified or indicated on accompanying Drawings. Contractor shall provide all equipment necessary and usually furnished in connection with such work and systems whether or not mentioned specifically herein or on the Drawings.
2. The Contractor shall be responsible for fitting his material and apparatus into the building and shall carefully lay out his work at the site to conform to the structural conditions, to avoid all obstructions, to conform to the details of the installation and thereby to provide an integrated satisfactory operating installation.
3. The Mechanical, Electrical, Plumbing, and associated Drawings are necessarily diagrammatic by their nature, and are not intended to show every connection in detail or every pipe or conduit in its exact location. These details are subject to the requirements of standards referenced elsewhere in these specifications, and structural and architectural conditions. The Contractor shall carefully investigate structural and finish conditions and shall coordinate the separate trades in order to avoid interference between the various phases of work. Work shall be organized and laid out so that it will be concealed in furred chases and suspended ceilings, etc., in finished portions of the building, unless specifically noted to be exposed. All exposed work shall be installed parallel or perpendicular to the lines of the building unless otherwise noted.
4. When the mechanical, electrical and plumbing drawings do not give exact details as to the elevation of pipe, conduit and ducts, the Contractor shall physically arrange the systems to fit in the space available at the elevations intended with proper grades for the functioning of the system involved. Piping, exposed conduit and the duct systems are generally intended to be installed true and square to the building construction, and located as high as possible against the structure in a neat and workmanlike manner. The Drawings do not show all required offsets, control lines, pilot lines and other location details. Work shall be concealed in all finished areas.

1.5 WORK SEQUENCE

A. Locate Utilities:

1. Coordinate with power, water, sewer, telephone, communications, and other utilities as well as designated Owner's personnel to locate all utilities prior to digging in any area.
2. Obtain any approvals required from utilities to relocate utilities.
3. Cost of relocating or bypassing utilities indicated on drawings shall be included in Base Bid.

B. Coordinate with Division 1 requirements to optimize construction schedule.

C. Provide equipment and material submittals, coordination drawings and shop drawings as required by specifications.

D. Submit detailed plumbing Schedule of Values with Submittals. Plumbing Submittals will not be accepted without a detailed Schedule of Values.

E. Sequence construction in coordination with work by other disciplines.

1.6 CONTRACTOR USE OF PREMISES

A. Use of the Site: Limit use of the premises to work in areas indicated. Confine operations to areas within contract limits indicated. Do not disturb portions of the site beyond the areas in which the Work is indicated.

1. Driveways and Entrances: Keep driveways and entrances to construction site clear and available to other Contractors, Owner, and A/E personnel at all times. Do not use these areas for parking or storage of materials. Schedule deliveries to minimize space and time requirements for storage of materials and equipment on-site.

B. Site Safety: Take every precaution to ensure the site does not present a threat to the safety of occupants and/or workers. Minimal safety requirements include, but are not limited to the following:

1. Temporary fencing around construction areas.
2. Yellow caution tape and construction barricades along open trenches during the day. Trenches shall be covered at night and warning lights provided on construction barricades.
3. Temporary fencing around equipment while site work is in progress.

1.7 SUBMITTALS

A. Manufacturer's standard dimensioned drawings, performance and product data shall be edited to delete reference to equipment, features, or information which is not applicable to the equipment being supplied for this project.

B. Provide all plumbing submittals at the same time in one or multiple bound volumes. Include originals from manufacturer. All submittals shall be in native pdf and searchable format. Faxes and copies of faxes are not acceptable.

C. Provide sufficient copies of approved data, with the engineer's approved stamp, for inclusion in the operations and maintenance manuals.

D. Provide detailed coordination drawings showing how plumbing system components will be installed in coordination with work by others. Engineer's drawing files will be made available to Contractor for producing coordination and as-built drawings upon request.

1.8 SCHEDULE OF VALUES -Special Requirements

A. Plumbing Contractor shall submit a Schedule of Values reflecting the total value of Plumbing Work in the Contract, and broken down into the following items as a minimum, with a line-item for Materials/Equipment and another for Labor:

1. Plumbing fixtures and equipment
2. Plumbing materials
3. Plumbing labor
4. Allowances.
5. Miscellaneous
6. Administrative and project management.

B. Schedule of Values shall be included with bound submittals. Submittals without a Schedule of Values shall not be reviewed.

1.9 EQUIPMENT MANUFACTURERS

A. Plumbing design is based on equipment and materials scheduled and specified. These are used as the basis for performance characteristics, quality, and physical dimensions/weight.

B. Equipment and materials by other APPROVED manufacturers may be provided by Contractor. In doing so, Contractor assumes responsibility for the performance, quality, and physical dimensions of the proposed units.

C. Any costs associated with modifications to the design due to submittal of equipment and/or materials other than those used as the basis of design are the Contractor's responsibility. This includes any design time, production of drawings, and time delays.

D. Where use of equipment and/or materials other than those used as the basis of design impact other disciplines, Contractor shall assume responsibility for all costs associated with any APPROVED modifications. This may include resizing of electrical circuits, modifying openings in the structure, relocating floor drains, etc.

1.10 OPERATIONS AND MAINTENANCE MANUALS & TRAINING

A. Submit Operations and Maintenance Manuals two weeks prior to Substantial Completion Inspection. Engineer will not conduct a Substantial Completion Inspection without having reviewed Operations and Maintenance Manuals.

B. Use Operations and Maintenance Manuals as a guide for conducting training of Owner's personnel.

PART 2 - PRODUCTS (Not Used)

PART 3 - EXECUTION (Not Used)

END OF SECTION 220010

SECTION 220517 - SLEEVES AND SLEEVE SEALS FOR PLUMBING PIPING

PART 1 - GENERAL

1.1 RELATED DOCUMENTS

A. Drawings and general provisions of the Contract, including General and Supplementary Conditions and Division 01 Specification Sections, apply to this Section.

1.2 SUMMARY

A. Section Includes:

1. Sleeves.
2. Stack-sleeve fittings.
3. Sleeve-seal systems.
4. Sleeve-seal fittings.
5. Grout.

1.3 ACTION SUBMITTALS

A. Product Data: For each type of product indicated.

PART 2 - PRODUCTS

2.1 SLEEVES

A. Cast-Iron Wall Pipes: Cast or fabricated of cast or ductile iron and equivalent to ductile-iron pressure pipe, with plain ends and integral waterstop unless otherwise indicated.

B. Galvanized-Steel Wall Pipes: ASTM A 53/A 53M, Schedule 40, with plain ends and welded steel collar; zinc coated.

C. Galvanized-Steel-Pipe Sleeves: ASTM A 53/A 53M, Type E, Grade B, Schedule 40, zinc coated, with plain ends.

D. Galvanized-Steel-Sheet Sleeves: 0.0239-inch minimum thickness; round tube closed with welded longitudinal joint.

2.2 STACK-SLEEVE FITTINGS

A. Manufacturers:

1. Smith, Jay R. Mfg. Co.
2. Zurn Specification Drainage Operation; Zurn Plumbing Products Group.

B. Description: Manufactured, cast-iron sleeve with integral clamping flange. Include clamping ring, bolts, and nuts for membrane flashing.

1. Underdeck Clamp: Clamping ring with setscrews.

2.3 SLEEVE-SEAL SYSTEMS

A. Manufacturers:

1. Advance Products & Systems, Inc.
2. CALPICO, Inc.
3. Metraflex Company (The).
4. Pipeline Seal and Insulator, Inc.
5. Proco Products, Inc.

B. Description: Modular sealing-element unit, designed for field assembly, for filling annular space between piping and sleeve.

1. Sealing Elements: EPDM-rubber interlocking links shaped to fit surface of pipe. Include type and number required for pipe material and size of pipe.
2. Pressure Plates: Carbon steel.
3. Connecting Bolts and Nuts: Carbon steel, with corrosion-resistant coating of length required to secure pressure plates to sealing elements.

2.4 SLEEVE-SEAL FITTINGS

A. Manufacturers:

1. Presealed Systems.

B. Description: Manufactured plastic, sleeve-type, waterstop assembly made for imbedding in concrete slab or wall. Unit has plastic or rubber waterstop collar with center opening to match piping OD.

2.5 GROUT

A. Standard: ASTM C 1107/C 1107M, Grade B, post-hardening and volume-adjusting, dry, hydraulic-cement grout.

B. Characteristics: Nonshrink; recommended for interior and exterior applications.

C. Design Mix: 5000-psi, 28-day compressive strength.

D. Packaging: Premixed and factory packaged.

PART 3 - EXECUTION

3.1 SLEEVE INSTALLATION

A. Install sleeves for piping passing through penetrations in floors, partitions, roofs, and walls.

B. For sleeves that will have sleeve-seal system installed, select sleeves of size large enough to provide 1-inch annular clear space between piping and concrete slabs and walls.

1. Sleeves are not required for core-drilled holes.

C. Install sleeves in concrete floors, concrete roof slabs, and concrete walls as new slabs and walls are constructed.
1. Cut sleeves to length for mounting flush with both surfaces.

a. Exception: Extend sleeves installed in floors of mechanical equipment areas or other wet areas 2 inches above finished floor level.

2. Using grout, seal the space outside of sleeves in slabs and walls without sleeve-seal system.

D. Install sleeves for pipes passing through interior partitions.

1. Cut sleeves to length for mounting flush with both surfaces.
2. Install sleeves that are large enough to provide 1/4-inch annular clear space between sleeve and pipe or pipe insulation.
3. Seal annular space between sleeve and piping or piping insulation; use joint sealants appropriate for size, depth, and location of joint. Comply with requirements for sealants specified in Section 079200 "Joint Sealants."

E. Fire-Barrier Penetrations: Maintain indicated fire rating of walls, partitions, ceilings, and floors at pipe penetrations. Seal pipe penetrations with firestop materials. Comply with requirements for firestopping specified in Section 078413 "Penetration Firestopping."

3.2 STACK-SLEEVE-FITTING INSTALLATION

A. Install stack-sleeve fittings in new slabs as slabs are constructed.

1. Install fittings that are large enough to provide 1/4-inch annular clear space between sleeve and pipe or pipe insulation.
2. Secure flashing between clamping flanges for pipes penetrating floors with membrane waterproofing. Comply with requirements for flashing specified in Section 076200 "Sheet Metal Flashing and Trim."
3. Install section of cast-iron soil pipe to extend sleeve to 2 inches above finished floor level.
4. Extend cast-iron sleeve fittings below floor slab as required to secure clamping ring if ring is specified.
5. Using grout, seal the space around outside of stack-sleeve fittings.

B. Fire-Barrier Penetrations: Maintain indicated fire rating of floors at pipe penetrations. Seal pipe penetrations with firestop materials. Comply with requirements for firestopping specified in Section 078413 "Penetration Firestopping."

3.3 SLEEVE-SEAL-SYSTEM INSTALLATION

A. Install sleeve-seal systems in sleeves in exterior concrete walls and slabs-on-grade at service piping entries into building.

B. Select type, size, and number of sealing elements required for piping material and size and for sleeve ID or hole size. Position piping in center of sleeve. Center piping in penetration, assemble sleeve-seal system components, and install in annular space between piping and sleeve. Tighten bolts against pressure plates that cause sealing elements to expand and make a watertight seal.

3.4 SLEEVE-SEAL-FITTING INSTALLATION

A. Install sleeve-seal fittings in new walls and slabs as they are constructed.

B. Assemble fitting components of length to be flush with both surfaces of concrete slabs and walls. Position waterstop flange to be centered in concrete slab or wall.

C. Secure nailing flanges to concrete forms.

D. Using grout, seal the space around outside of sleeve-seal fittings.

3.5 SLEEVE AND SLEEVE-SEAL SCHEDULE

A. Use sleeves and sleeve seals for the following piping-penetration applications:

1. Exterior Concrete Walls above Grade: Cast-iron wall sleeves

2. Exterior Concrete Walls below Grade: Cast-iron wall sleeves with sleeve-seal system.
   a. Select sleeve size to allow for 1-inch annular clear space between piping and sleeve for installing sleeve-seal system

3. Concrete Slabs-on-Grade: Cast-iron wall sleeves with sleeve-seal system.
   a. Select sleeve size to allow for 1-inch annular clear space between piping and sleeve for installing sleeve-seal system.

4. Concrete Slabs above Grade: Galvanized-steel-pipe sleeves

5. Interior Partitions: Galvanized-steel-pipe sleeves

END OF SECTION 220517

SECTION 220518 - ESCUTCHEONS FOR PLUMBING PIPING

PART 1 - GENERAL

1.1 RELATED DOCUMENTS

A. Drawings and general provisions of the Contract, including General and Supplementary Conditions and Division 01 Specification Sections, apply to this Section.

1.2 SUMMARY

A. Section Includes:

1. Escutcheons.
2. Floor plates.

1.3 ACTION SUBMITTALS

A. Product Data: For each type of product indicated.

PART 2 - PRODUCTS

2.1 ESCUTCHEONS

A. One-Piece, Cast-Brass Type: With polished, chrome-plated and rough-brass finish and setscrew fastener.

B. One-Piece, Deep-Pattern Type: Deep-drawn, box-shaped brass with chrome-plated finish and spring-clip fasteners.

C. One-Piece, Stamped-Steel Type: With chrome-plated finish and spring-clip fasteners.

D. Split-Casting Brass Type: With polished, chrome-plated and rough-brass finish and with concealed hinge and setscrew.

2.2 FLOOR PLATES

A. One-Piece Floor Plates: Cast-iron flange with holes for fasteners.

B. Split-Casting Floor Plates: Cast brass with concealed hinge.

SECTION 220518 - ESCUTCHEONS FOR PLUMBING PIPING

PART 3 - EXECUTION

3.1 INSTALLATION

A. Install escutcheons for piping penetrations of walls, ceilings, and finished floors.

B. Install escutcheons with ID to closely fit around pipe, tube, and insulation of insulated piping and with OD that completely covers opening.

1. Escutcheons for New Piping:

a. Piping with Fitting or Sleeve Protruding from Wall: One-piece, deep-pattern type.
b. Insulated Piping: One-piece, stamped-steel type.
c. Bare Piping at Wall and Floor Penetrations in Finished Spaces: One-piece, cast-brass type with polished, chrome-plated finish.
d. Bare Piping at Ceiling Penetrations in Finished Spaces: One-piece, cast-brass or split-casting brass type with polished, chrome-plated finish.
e. Bare Piping in Unfinished Service Spaces: One-piece, cast-brass type with rough-brass finish.
f. Bare Piping in Equipment Rooms: One-piece, cast-brass type with rough-brass finish.

C. Install floor plates for piping penetrations of equipment-room floors.

D. Install floor plates with ID to closely fit around pipe, tube, and insulation of piping and with OD that completely covers opening.

1. New Piping: One-piece, floor-plate type.
2. Existing Piping: Split-casting, floor-plate type.

3.2 FIELD QUALITY CONTROL

A. Replace broken and damaged escutcheons and floor plates using new materials.

END OF SECTION 220518

SECTION 220523 - GENERAL-DUTY VALVES FOR PLUMBING PIPING

PART 1 - GENERAL

1.1 RELATED DOCUMENTS

A. Drawings and general provisions of the Contract, including General and Supplementary Conditions and Division 01 Specification Sections, apply to this Section.

1.2 SUMMARY

A. Section Includes:
   1. Bronze ball valves.
   2. Bronze gate valves.
   3. Bronze globe valves.

B. Related Sections:

   1. Division 22 plumbing piping Sections for specialty valves applicable to those Sections only.
   2. Division 22 Section "Identification for Plumbing Piping and Equipment" for valve tags and schedules.

1.3 DEFINITIONS

A. CWP: Cold working pressure.

B. EPDM: Ethylene propylene copolymer rubber.

C. NBR: Acrylonitrile-butadiene, Buna-N, or nitrile rubber.

D. NRS: Nonrising stem.

E. OS&Y: Outside screw and yoke.

F. RS: Rising stem.

1.4 SUBMITTALS

A. Product Data: For each type of valve indicated. Include body, seating, and trim materials; valve design; pressure and temperature classifications; end connections; arrangement; dimensions; and required clearances. Include list indicating valve and its application. Include rated capacities; shipping, installed, and operating weights; furnished specialties; and accessories.

1.5 QUALITY ASSURANCE

A. Source Limitations for Valves: Obtain each type of valve from single source from single manufacturer.

B. ASME Compliance:

1. ASME B16.10 and ASME B16.34 for ferrous valve dimensions and design criteria.
2. ASME B31.9 for building services piping valves.

C. NSF Compliance: NSF 61 for valve materials for potable-water service.

1.6 DELIVERY, STORAGE, AND HANDLING

A. Prepare valves for shipping as follows:

1. Protect internal parts against rust and corrosion.
2. Protect threads, flange faces, grooves, and weld ends.
3. Set angle, gate, and globe valves closed to prevent rattling.
4. Set ball and plug valves open to minimize exposure of functional surfaces.
5. Set butterfly valves closed or slightly open.
6. Block check valves in either closed or open position.

B. Use the following precautions during storage:

1. Maintain valve end protection.
2. Store valves indoors and maintain at higher than ambient dew point temperature. If outdoor storage is necessary, store valves off the ground in watertight enclosures.

C. Use sling to handle large valves; rig sling to avoid damage to exposed parts. Do not use handwheels or stems as lifting or rigging points.

PART 2 - PRODUCTS

2.1 GENERAL REQUIREMENTS FOR VALVES

A. Refer to valve schedule articles for applications of valves.

B. Valve Pressure and Temperature Ratings: Not less than indicated and as required for system pressures and temperatures.

C. Valve Sizes: Same as upstream piping unless otherwise indicated.

D. Valve Actuator Types:

1. Gear Actuator: For quarter-turn valves NPS 8 and larger.
2. Handwheel: For valves other than quarter-turn types.
3. Handlever: For quarter-turn valves NPS 6 and smaller.

4. Wrench: For plug valves with square heads. Furnish Owner with 1 wrench for every 5 plug valves, for each size square plug-valve head.

E. Valves in Insulated Piping: With 2-inchstem extensions and the following features:

1. Gate Valves: With rising stem.
2. Ball Valves: With extended operating handle of non-thermal-conductive material, and protective sleeve that allows operation of valve without breaking the vapor seal or disturbing insulation.

F. Valve-End Connections:
1. Solder Joint: With sockets according to ASME B16.18.
2. Threaded: With threads according to ASME B1.20.1.

G. Valve Bypass and Drain Connections: MSS SP-45.

2.2 BRONZE BALL VALVES

A. One-Piece, Reduced-Port, Bronze Ball Valves with Bronze Trim:

1. Manufacturers:
   a. NIBCO INC.
   b. Watts Industries, Inc.; Water Products Div.
   c. Kitz Corporation
   d. Apollo

2. Description:

   a. Standard: MSS SP-110.
   b. CWP Rating: 400 psig.
   c. Body Design: One piece.
   d. Body Material: Bronze.
   e. Ends: Threaded.
   f. Seats: PTFE or TFE.
   g. Stem: Bronze.
   h. Ball: Chrome-plated brass.
   i. Port: Reduced.

2.3 BRONZE GATE VALVES

A. Class 150, Bronze Gate Valves:

1. Manufacturers:
   a. NIBCO INC.
   b. Hammond Valve.
   c. Kitz Corporation.
   d. Watts Regulator Co.; a division of Watts Water Technologies, Inc.
   e. Apollo

2. Description:

a. Standard: MSS SP-80, Type 1.
b. CWP Rating: 300 psig.
c. Body Material: ASTM B 62, bronze with integral seat and union-ring bonnet.
d. Ends: Threaded.
e. Stem: Bronze.
f. Disc: Solid wedge; bronze.
g. Packing: Asbestos free.
h. Handwheel: Malleable iron**, bronze, or aluminum**.

2.4 BRONZE GLOBE VALVES

A. Class 150, Bronze Globe Valves with Nonmetallic Disc:

1. Manufacturers:
a. Hammond Valve.
b. Milwaukee Valve Company.
c. Watts Regulator Co.; a division of Watts Water Technologies, Inc.
d. Kitz Corporation.
e. Apollo

2. Description:

a. Standard: MSS SP-80, Type 2.
b. CWP Rating: 300 psig.
c. Body Material: ASTM B 62, bronze with integral seat and union-ring bonnet.
d. Ends: Threaded.
e. Stem: Bronze.
f. Disc: PTFE or TFE.
g. Packing: Asbestos free.
h. Handwheel: Malleable iron, bronze, or aluminum.

PART 3 - EXECUTION

3.1 EXAMINATION

A. Examine valve interior for cleanliness, freedom from foreign matter, and corrosion. Remove special packing materials, such as blocks, used to prevent disc movement during shipping and handling.

B. Operate valves in positions from fully open to fully closed. Examine guides and seats made accessible by such operations.

C. Examine threads on valve and mating pipe for form and cleanliness.

D. Examine mating flange faces for conditions that might cause leakage. Check bolting for proper size, length, and material. Verify that gasket is of proper size, that its material composition is suitable for service, and that it is free from defects and damage.

E. Do not attempt to repair defective valves; replace with new valves.

3.2 VALVE INSTALLATION

A. Install valves with unions or flanges at each piece of equipment arranged to allow service, maintenance, and equipment removal without system shutdown.

B. Locate valves for easy access and provide separate support where necessary.

C. Install valves in horizontal piping with stem at or above center of pipe.

D. Install valves in position to allow full stem movement.

3.3 ADJUSTING

A. Adjust or replace valve packing after piping systems have been tested and put into service but before final adjusting and balancing. Replace valves if persistent leaking occurs.

3.4 GENERAL REQUIREMENTS FOR VALVE APPLICATIONS

A. If valve applications are not indicated, use the following:

1. Shutoff Service: Ball, or gate, or plug valves.
2. Butterfly Valve Dead-End Service: Single-flange (lug) type.
3. Throttling Service: Globe or ball valves.

B. If valves with specified SWP classes or CWP ratings are not available, the same types of valves with higher SWP classes or CWP ratings may be substituted.

C. Select valves, except wafer types, with the following end connections:

1. For Copper Tubing, NPS 2and Smaller: Threaded ends except where solder-joint valve-end option is indicated in valve schedules below.
2. For Copper Tubing, NPS 2-1/2 to NPS 4: Flanged ends except where threaded valve-end option is indicated in valve schedules below.
3. For Copper Tubing, NPS 5and Larger: Flanged ends.

3.5 DOMESTIC, HOT- AND COLD-WATER VALVE SCHEDULE

A. Pipe NPS 2and Smaller:

1. Bronze Valves: May be provided with solder-joint ends instead of threaded ends.
2. Ball Valves: One piece, regular port, bronze with bronze trim.
3. Bronze Gate Valves: Class 150.

4. Bronze Globe Valves: Class 150, bronze, nonmetallic disc.

B. Pipe NPS 2-1/2 and Larger:

1. Iron Valves, NPS 2-1/2 to NPS 4: May be provided with threaded ends instead of flanged ends.
2. Iron Ball Valves: Class 150.
3. Iron, Single-Flange Butterfly Valves: 200 CWP, EPDM seat, stainless-steel disc.
4. Iron Gate Valves: Class 250.
5. Iron Globe Valves: Class 250.

END OF SECTION 220523

SECTION 220529 - HANGERS AND SUPPORTS FOR PLUMBING PIPING AND EQUIPMENT

PART 1 - GENERAL

1.1 RELATED DOCUMENTS

A. Drawings and general provisions of the Contract, including General and Supplementary Conditions and Division 01 Specification Sections, apply to this Section.

1.2 SUMMARY

A. Section Includes:

1. Metal pipe hangers and supports.
2. Trapeze pipe hangers.
3. Thermal-hanger shield inserts.
4. Fastener systems.
5. Pipe stands.
6. Equipment supports.

B. Related Sections:

1. Section 055000 "Metal Fabrications" for structural-steel shapes and plates for trapeze hangers for pipe and equipment supports.
2. Section 220516 "Expansion Fittings and Loops for Plumbing Piping" for pipe guides and anchors.
3. Section 220548 "Vibration and Seismic Controls for Plumbing Piping and Equipment" for vibration isolation devices.

1.3 DEFINITIONS

A. MSS: Manufacturers Standardization Society of The Valve and Fittings Industry Inc.

1.4 PERFORMANCE REQUIREMENTS

A. Delegated Design: Design trapeze pipe hangers and equipment supports, including comprehensive engineering analysis by a qualified professional engineer, using performance requirements and design criteria indicated.

B. Structural Performance: Hangers and supports for plumbing piping and equipment shall withstand the effects of gravity loads and stresses within limits and under conditions indicated according to ASCE/SEI 7.

1. Design supports for multiple pipes, including pipe stands, capable of supporting combined weight of supported systems, system contents, and test water.
2. Design equipment supports capable of supporting combined operating weight of supported equipment and connected systems and components.

1.5 ACTION SUBMITTALS

A. Product Data: For each type of product indicated.

B. Shop Drawings: Signed and sealed by a qualified professional engineer. Show fabrication and installation details and include calculations for the following; include Product Data for components:

1. Trapeze pipe hangers.
2. Metal framing systems.
3. Fiberglass strut systems.
4. Pipe stands.
5. Equipment supports.

C. Delegated-Design Submittal: For trapeze hangers indicated to comply with performance requirements and design criteria, including analysis data signed and sealed by the qualified professional engineer responsible for their preparation.

1. Detail fabrication and assembly of trapeze hangers.
2. Design Calculations: Calculate requirements for designing trapeze hangers.

1.6 INFORMATIONAL SUBMITTALS

A. Welding certificates.

1.7 QUALITY ASSURANCE

A. Structural Steel Welding Qualifications: Qualify procedures and personnel according to AWS D1.1/D1.1M, "Structural Welding Code - Steel."

B. Pipe Welding Qualifications: Qualify procedures and operators according to ASME Boiler and Pressure Vessel Code.

PART 2 - PRODUCTS

2.1 METAL PIPE HANGERS AND SUPPORTS

A. Carbon-Steel Pipe Hangers and Supports:

1. Description: MSS SP-58, Types 1 through 58, factory-fabricated components.
2. Galvanized Metallic Coatings: Pregalvanized or hot dipped.
3. Nonmetallic Coatings: Plastic coating, jacket, or liner.
4. Padded Hangers: Hanger with fiberglass or other pipe insulation pad or cushion to support bearing surface of piping.
5. Hanger Rods: Continuous-thread rod, nuts, and washer made of carbon steel.

B. Copper Pipe Hangers:

1. Description: MSS SP-58, Types 1 through 58, copper-coated-steel, factory-fabricated components.
2. Hanger Rods: Continuous-thread rod, nuts, and washer made of copper-coated steel.

2.2 TRAPEZE PIPE HANGERS

A. Description: MSS SP-69, Type 59, shop- or field-fabricated pipe-support assembly made from structural carbon-steel shapes with MSS SP-58 carbon-steel hanger rods, nuts, saddles, and U-bolts.

2.3 METAL FRAMING SYSTEMS

A. MFMA Manufacturer Metal Framing Systems:
   1. Manufacturers:
      a. Allied Tube & Conduit.
      b. Cooper B-Line, Inc.
      c. Flex-Strut Inc.
      d. GS Metals Corp.
      e. Thomas & Betts Corporation.
      f. Unistrut Corporation; Tyco International, Ltd.
      g. Wesanco, Inc.
   2. Description: Shop- or field-fabricated pipe-support assembly for supporting multiple parallel pipes.
   3. Standard: MFMA-4.
   4. Channels: Continuous slotted steel channel with inturned lips.
   5. Channel Nuts: Formed or stamped steel nuts or other devices designed to fit into channel slot and, when tightened, prevent slipping along channel.
   6. Hanger Rods: Continuous-thread rod, nuts, and washer made of carbon steel.
   7. Metallic Coating: Hot-dipped galvanized.
   8. Plastic Coating: PVC.

2.4 THERMAL-HANGER SHIELD INSERTS

A. Manufacturers:
   1. Carpenter & Paterson, Inc.
   2. Clement Support Services.
   3. ERICO International Corporation.
   4. National Pipe Hanger Corporation.
   5. PHS Industries, Inc.
   6. Pipe Shields, Inc.; a subsidiary of Piping Technology & Products, Inc.
   7. Piping Technology & Products, Inc.
   8. Rilco Manufacturing Co., Inc.
   9. Value Engineered Products, Inc.

B. Insulation-Insert Material for Cold Piping: ASTM C 552, Type II cellular glass with 100-psig minimum compressive strength and vapor barrier.

C. Insulation-Insert Material for Hot Piping: ASTM C 552, Type II cellular glass with 100-psig minimum compressive strength.

D. For Trapeze or Clamped Systems: Insert and shield shall cover entire circumference of pipe.

E. For Clevis or Band Hangers: Insert and shield shall cover lower 180 degrees of pipe.

F. Insert Length: Extend 2 inches beyond sheet metal shield for piping operating below ambient air temperature.

2.5 FASTENER SYSTEMS

A. Powder-Actuated Fasteners: Threaded-steel stud, for use in hardened portland cement concrete with pull-out, tension, and shear capacities appropriate for supported loads and building materials where used.

B. Mechanical-Expansion Anchors: Insert-wedge-type, stainless- steel anchors, for use in hardened portland cement concrete; with pull-out, tension, and shear capacities appropriate for supported loads and building materials where used.

2.6 PIPE STANDS

A. General Requirements for Pipe Stands: Shop- or field-fabricated assemblies made of manufactured corrosion-resistant components to support roof-mounted piping.

B. Compact Pipe Stand: One-piece plastic unit with integral-rod roller, pipe clamps, or V-shaped cradle to support pipe, for roof installation without membrane penetration.

C. Low-Type, Single-Pipe Stand: One-piece plastic base unit with plastic roller, for roof installation without membrane penetration.

D. High-Type, Single-Pipe Stand:

1. Description: Assembly of base, vertical and horizontal members, and pipe support, for roof installation without membrane penetration.
2. Base: Plastic.
3. Vertical Members: Two or more cadmium-plated-steel or stainless-steel, continuous-thread rods.
4. Horizontal Member: Cadmium-plated-steel or stainless-steel rod with plastic or stainless-steel, roller-type pipe support.

E. High-Type, Multiple-Pipe Stand:

1. Description: Assembly of bases, vertical and horizontal members, and pipe supports, for roof installation without membrane penetration.
2. Bases: One or more; plastic.
3. Vertical Members: Two or more protective-coated-steel channels.

4. Horizontal Member: Protective-coated-steel channel.
5. Pipe Supports: Galvanized-steel, clevis-type pipe hangers.

F. Curb-Mounting-Type Pipe Stands: Shop- or field-fabricated pipe supports made from structural-steel shapes, continuous-thread rods, and rollers, for mounting on permanent stationary roof curb.

2.7 PIPE POSITIONING SYSTEMS

A. Description: IAPMO PS 42, positioning system of metal brackets, clips, and straps for positioning piping in pipe spaces; for plumbing fixtures in commercial applications.

2.8 EQUIPMENT SUPPORTS

A. Description: Welded, shop- or field-fabricated equipment support made from structural carbon-steel shapes.

2.9 MISCELLANEOUS MATERIALS

A. Structural Steel: ASTM A 36/A 36M, carbon-steel plates, shapes, and bars; black and galvanized.

B. Grout: ASTM C 1107, factory-mixed and -packaged, dry, hydraulic-cement, nonshrink and nonmetallic grout; suitable for interior and exterior applications.

1. Properties: Nonstaining, noncorrosive, and nongaseous.
2. Design Mix: 5000-psi, 28-day compressive strength.

PART 3 - EXECUTION

3.1 HANGER AND SUPPORT INSTALLATION

A. Metal Pipe-Hanger Installation: Comply with MSS SP-69 and MSS SP-89. Install hangers, supports, clamps, and attachments as required to properly support piping from the building structure.

B. Metal Trapeze Pipe-Hanger Installation: Comply with MSS SP-69 and MSS SP-89. Arrange for grouping of parallel runs of horizontal piping, and support together on field-fabricated trapeze pipe hangers.

1. Pipes of Various Sizes: Support together and space trapezes for smallest pipe size or install intermediate supports for smaller diameter pipes as specified for individual pipe hangers.
2. Field fabricate from ASTM A 36/A 36M, carbon-steel shapes selected for loads being supported. Weld steel according to AWS D1.1/D1.1M.

C. Metal Framing System Installation: Arrange for grouping of parallel runs of piping, and support together on field-assembled metal framing systems.

D. Thermal-Hanger Shield Installation: Install in pipe hanger or shield for insulated piping.

E. Fastener System Installation:

1. Install powder-actuated fasteners for use in lightweight concrete or concrete slabs less than 4 inches thick in concrete after concrete is placed and completely cured. Use operators that are licensed by powder-actuated tool manufacturer. Install fasteners according to powder-actuated tool manufacturer's operating manual.
2. Install mechanical-expansion anchors in concrete after concrete is placed and completely cured. Install fasteners according to manufacturer's written instructions.

F. Pipe Stand Installation:

1. Pipe Stand Types except Curb-Mounted Type: Assemble components and mount on smooth roof surface. Do not penetrate roof membrane.
2. Curb-Mounted-Type Pipe Stands: Assemble components or fabricate pipe stand and mount on permanent, stationary roof curb. See Section 077200 "Roof Accessories" for curbs.

G. Pipe Positioning-System Installation: Install support devices to make rigid supply and waste piping connections to each plumbing fixture.

H. Install hangers and supports complete with necessary attachments, inserts, bolts, rods, nuts, washers, and other accessories.

I. Equipment Support Installation: Fabricate from welded-structural-steel shapes.

J. Install hangers and supports to allow controlled thermal and seismic movement of piping systems, to permit freedom of movement between pipe anchors, and to facilitate action of expansion joints, expansion loops, expansion bends, and similar units.

K. Install building attachments within concrete slabs or attach to structural steel. Install additional attachments at concentrated loads, including valves, flanges, and strainers, NPS 2-1/2 and larger and at changes in direction of piping. Install concrete inserts before concrete is placed; fasten inserts to forms and install reinforcing bars through openings at top of inserts.

L. Load Distribution: Install hangers and supports so that piping live and dead loads and stresses from movement will not be transmitted to connected equipment.

M. Pipe Slopes: Install hangers and supports to provide indicated pipe slopes and to not exceed maximum pipe deflections allowed by ASME B31.9 for building services piping.

N. Insulated Piping:

1. Attach clamps and spacers to piping.

a. Piping Operating above Ambient Air Temperature: Clamp may project through insulation.

b. Piping Operating below Ambient Air Temperature: Use thermal-hanger shield insert with clamp sized to match OD of insert.
c. Do not exceed pipe stress limits allowed by ASME B31.9 for building services piping.

2. Install MSS SP-58, Type 39, protection saddles if insulation without vapor barrier is indicated. Fill interior voids with insulation that matches adjoining insulation.

a. Option: Thermal-hanger shield inserts may be used. Include steel weight-distribution plate for pipe NPS 4 and larger if pipe is installed on rollers.

3. Install MSS SP-58, Type 40, protective shields on cold piping with vapor barrier. Shields shall span an arc of 180 degrees.

a. Option: Thermal-hanger shield inserts may be used. Include steel weight-distribution plate for pipe NPS 4 and larger if pipe is installed on rollers.

4. Shield Dimensions for Pipe: Not less than the following:

a. NPS 1/4 to NPS 3-1/2: 12 inches long and 0.048 inch thick.
b. NPS 4: 12 inches long and 0.06 inch thick.
c. NPS 5 and NPS 6: 18 inches long and 0.06 inch thick.
d. NPS 8 to NPS 14: 24 inches long and 0.075 inch thick.
e. NPS 16 to NPS 24: 24 inches long and 0.105 inch thick.

5. Pipes NPS 8 and Larger: Include wood or reinforced calcium-silicate-insulation inserts of length at least as long as protective shield.
6. Thermal-Hanger Shields: Install with insulation same thickness as piping insulation.

3.2 EQUIPMENT SUPPORTS

A. Fabricate structural-steel stands to suspend equipment from structure overhead or to support equipment above floor.

B. Grouting: Place grout under supports for equipment and make bearing surface smooth.

C. Provide lateral bracing, to prevent swaying, for equipment supports.

3.3 METAL FABRICATIONS

A. Cut, drill, and fit miscellaneous metal fabrications for trapeze pipe hangers and equipment supports.

B. Fit exposed connections together to form hairline joints. Field weld connections that cannot be shop welded because of shipping size limitations.

C. Field Welding: Comply with AWS D1.1/D1.1M procedures for shielded, metal arc welding; appearance and quality of welds; and methods used in correcting welding work; and with the following:

1. Use materials and methods that minimize distortion and develop strength and corrosion resistance of base metals.
2. Obtain fusion without undercut or overlap.
3. Remove welding flux immediately.
4. Finish welds at exposed connections so no roughness shows after finishing and so contours of welded surfaces match adjacent contours.

3.4 ADJUSTING

A. Hanger Adjustments: Adjust hangers to distribute loads equally on attachments and to achieve indicated slope of pipe.

B. Trim excess length of continuous-thread hanger and support rods to 1-1/2 inches.

3.5 PAINTING

A. Touchup: Clean field welds and abraded areas of shop paint. Paint exposed areas immediately after erecting hangers and supports. Use same materials as used for shop painting. Comply with SSPC-PA 1 requirements for touching up field-painted surfaces.

1. Apply paint by brush or spray to provide a minimum dry film thickness of 2.0 mils.

B. Touchup: Cleaning and touchup painting of field welds, bolted connections, and abraded areas of shop paint on miscellaneous metal are specified in Section 099113 "Exterior Painting." Section 099123 "Interior Painting." Section 099600 "High-Performance Coatings."

C. Galvanized Surfaces: Clean welds, bolted connections, and abraded areas and apply galvanizing-repair paint to comply with ASTM A 780.

3.6 HANGER AND SUPPORT SCHEDULE

A. Specific hanger and support requirements are in Sections specifying piping systems and equipment.

B. Comply with MSS SP-69 for pipe-hanger selections and applications that are not specified in piping system Sections.

C. Use hangers and supports with galvanized metallic coatings for piping and equipment that will not have field-applied finish.

D. Use nonmetallic coatings on attachments for electrolytic protection where attachments are in direct contact with copper tubing.

E. Use carbon-steel pipe hangers and supports metal trapeze pipe hangers and metal framing systems and attachments for general service applications.

F. Use stainless-steel pipe hangers and attachments for hostile environment applications.

G. Use copper-plated pipe hangers and copper attachments for copper piping and tubing.

H. Use padded hangers for piping that is subject to scratching.

I. Use thermal-hanger shield inserts for insulated piping and tubing.

J. Horizontal-Piping Hangers and Supports: Unless otherwise indicated and except as specified in piping system Sections, install the following types:

1. Adjustable, Steel Clevis Hangers (MSS Type 1): For suspension of noninsulated or insulated, stationary pipes NPS 1/2 to NPS 30.
2. Adjustable Pipe Saddle Supports (MSS Type 38): For stanchion-type support for pipes NPS 2-1/2 to NPS 36 if vertical adjustment is required, with steel-pipe base stanchion support and cast-iron floor flange.
3. Adjustable Roller Hangers (MSS Type 43): For suspension of pipes NPS 2-1/2 to NPS 24, from single rod if horizontal movement caused by expansion and contraction might occur.
4. Complete Pipe Rolls (MSS Type 44): For support of pipes NPS 2 to NPS 42 if longitudinal movement caused by expansion and contraction might occur but vertical adjustment is not necessary.
5. Pipe Roll and Plate Units (MSS Type 45): For support of pipes NPS 2 to NPS 24 if small horizontal movement caused by expansion and contraction might occur and vertical adjustment is not necessary.
6. Adjustable Pipe Roll and Base Units (MSS Type 46): For support of pipes NPS 2 to NPS 30 if vertical and lateral adjustment during installation might be required in addition to expansion and contraction.

K. Vertical-Piping Clamps: Unless otherwise indicated and except as specified in piping system Sections, install the following types:

1. Extension Pipe or Riser Clamps (MSS Type 8): For support of pipe risers NPS 3/4 to NPS 24.
2. Carbon- or Alloy-Steel Riser Clamps (MSS Type 42): For support of pipe risers NPS 3/4 to NPS 24 if longer ends are required for riser clamps.

L. Hanger-Rod Attachments: Unless otherwise indicated and except as specified in piping system Sections, install the following types:

1. Steel Turnbuckles (MSS Type 13): For adjustment up to 6 inches for heavy loads.
2. Steel Clevises (MSS Type 14): For 120 to 450 deg F piping installations.
3. Swivel Turnbuckles (MSS Type 15): For use with MSS Type 11, split pipe rings.
4. Malleable-Iron Sockets (MSS Type 16): For attaching hanger rods to various types of building attachments.
5. Steel Weldless Eye Nuts (MSS Type 17): For 120 to 450 deg F piping installations.

M. Building Attachments: Unless otherwise indicated and except as specified in piping system Sections, install the following types:

1. Steel or Malleable Concrete Inserts (MSS Type 18): For upper attachment to suspend pipe hangers from concrete ceiling.
2. Top-Beam C-Clamps (MSS Type 19): For use under roof installations with bar-joist construction, to attach to top flange of structural shape.

3. Side-Beam or Channel Clamps (MSS Type 20): For attaching to bottom flange of beams, channels, or angles.
4. Center-Beam Clamps (MSS Type 21): For attaching to center of bottom flange of beams.
5. Welded Beam Attachments (MSS Type 22): For attaching to bottom of beams if loads are considerable and rod sizes are large.
6. C-Clamps (MSS Type 23): For structural shapes.
7. Top-Beam Clamps (MSS Type 25): For top of beams if hanger rod is required tangent to flange edge.
8. Side-Beam Clamps (MSS Type 27): For bottom of steel I-beams.
9. Steel-Beam Clamps with Eye Nuts (MSS Type 28): For attaching to bottom of steel I-beams for heavy loads.
10. Linked-Steel Clamps with Eye Nuts (MSS Type 29): For attaching to bottom of steel I-beams for heavy loads, with link extensions.
11. Malleable-Beam Clamps with Extension Pieces (MSS Type 30): For attaching to structural steel.
12. Welded-Steel Brackets: For support of pipes from below or for suspending from above by using clip and rod. Use one of the following for indicated loads:

    a. Light (MSS Type 31): 750 lb.
    b. Medium (MSS Type 32): 1500 lb.
    c. Heavy (MSS Type 33): 3000 lb.
13. Horizontal Travelers (MSS Type 58): For supporting piping systems subject to linear horizontal movement where headroom is limited.

N. Saddles and Shields: Unless otherwise indicated and except as specified in piping system Sections, install the following types:

1. Steel-Pipe-Covering Protection Saddles (MSS Type 39): To fill interior voids with insulation that matches adjoining insulation.
2. Protection Shields (MSS Type 40): Of length recommended in writing by manufacturer to prevent crushing insulation.
3. Thermal-Hanger Shield Inserts: For supporting insulated pipe.

O. Comply with MSS SP-69 for trapeze pipe-hanger selections and applications that are not specified in piping system Sections.

P. Comply with MFMA-103 for metal framing system selections and applications that are not specified in piping system Sections.

Q. Use mechanical-expansion anchors instead of building attachments where required in concrete construction.

R. Use pipe positioning systems in pipe spaces behind plumbing fixtures to support supply and waste piping for plumbing fixtures.

END OF SECTION 220529

SECTION 220548.13 - VIBRATION CONTROLS FOR PLUMBING PIPING AND EQUIPMENT

PART 1 - GENERAL

1.1 RELATED DOCUMENTS

A. Drawings and general provisions of the Contract, including General and Supplementary Conditions and Division 01 Specification Sections, apply to this Section.

1.2 SUMMARY

A. Section Includes:

1. Elastomeric isolation pads.
2. Elastomeric isolation mounts.
3. Restrained elastomeric isolation mounts.
4. Elastomeric hangers.
5. Spring hangers.

B. Related Requirements:

1. Section 210548.13 "Vibration Controls for Fire-Suppression Piping and Equipment" for devices for fire-suppression equipment and systems.
2. Section 230548.13 "Vibration Controls for HVAC" for devices for HVAC equipment and systems.

1.3 ACTION SUBMITTALS

A. Product Data: For each type of product.

1. Include rated load, rated deflection, and overload capacity for each vibration isolation device.
2. Illustrate and indicate style, material, strength, fastening provision, and finish for each type and size of vibration isolation device type required.

B. Shop Drawings:

1. Detail fabrication and assembly of equipment bases. Detail fabrication including anchorages and attachments to structure and to supported equipment.

C. Delegated-Design Submittal: For each vibration isolation device.

1. Include design calculations for selecting vibration isolators.

1.4 INFORMATIONAL SUBMITTALS

A. Coordination Drawings: Show coordination of vibration isolation device installation for plumbing piping and equipment with other systems and equipment in the vicinity, including other supports and restraints, if any.

B. Welding certificates.

1.5 QUALITY ASSURANCE

A. Welding Qualifications: Qualify procedures and personnel according to AWS D1.1/D1.1M, "Structural Welding Code - Steel."

PART 2 - PRODUCTS

2.1 VIBRATION ISOLATORS

A. Manufacturers: Subject to compliance with requirements, provide products by one of the following:

1. Ace Mountings Co., Inc.
2. Amber/Booth Company, Inc.
3. California Dynamics Corporation.
4. Isolation Technology, Inc.
5. Kinetics Noise Control.
6. Mason Industries.
7. Vibration Eliminator Co., Inc.
8. Vibration Isolation.
9. Vibration Mountings & Controls, Inc.

B. Elastomeric Isolation Pads:
1. Fabrication: Single or multiple layers of sufficient durometer stiffness for uniform loading over pad area.
2. Size: Factory or field cut to match requirements of supported equipment.
3. Pad Material: Oil and water resistant with elastomeric properties.
4. Surface Pattern: Ribbed, Waffle, non-slip pattern.
5. Infused nonwoven cotton or synthetic fibers.
6. Load-bearing metal plates adhered to pads.
7. Sandwich-Core Material: Resilient and elastomeric.

C. Double-Deflection, Elastomeric Isolation Mounts:
1. Mounting Plates:

a. Top Plate: Encapsulated steel load transfer top plates, factory drilled and threaded with threaded studs or bolts.
b. Baseplate: Encapsulated steel bottom plates with holes provided for anchoring to support structure.

2. Elastomeric Material: Molded, oil-resistant rubber, neoprene, or other elastomeric material.

D. Restrained Elastomeric Isolation Mounts:
1. Description: All-directional isolator with restraints containing two separate and opposing elastomeric elements that prevent central threaded element and attachment hardware from contacting the housing during normal operation.

a. Housing: Cast-ductile iron or welded steel.
b. Elastomeric Material: Molded, oil-resistant rubber, neoprene, or other elastomeric material.

E. Freestanding, Laterally Stable, Open-Spring Isolators:
1. Outside Spring Diameter: Not less than 80 percent of the compressed height of the spring at rated load.
2. Minimum Additional Travel: 50 percent of the required deflection at rated load.
3. Lateral Stiffness: More than 80 percent of rated vertical stiffness.
4. Overload Capacity: Support 200 percent of rated load, fully compressed, without deformation or failure.
5. Baseplates: Factory-drilled steel plate for bolting to structure with an elastomeric isolator pad attached to the underside. Baseplates shall limit floor load to 500 psig.
6. Top Plate and Adjustment Bolt: Threaded top plate with adjustment bolt and cap screw to fasten and level equipment.

F. Freestanding, Laterally Stable, Open-Spring Isolators in Two-Part Telescoping Housing:
1. Outside Spring Diameter: Not less than 80 percent of the compressed height of the spring at rated load.
2. Minimum Additional Travel: 50 percent of the required deflection at rated load.
3. Lateral Stiffness: More than 80 percent of rated vertical stiffness.
4. Overload Capacity: Support 200 percent of rated load, fully compressed, without deformation or failure.
5. Two-Part Telescoping Housing: A steel top and bottom frame separated by an elastomeric material and enclosing the spring isolators.

a. Drilled base housing for bolting to structure with an elastomeric isolator pad attached to the underside. Bases shall limit floor load to 500 psig.
b. Top housing with threaded mounting holes and internal leveling device, elastomeric pad.

G. Elastomeric Mount in a Steel Frame with Upper and Lower Steel Hanger Rods:
1. Frame: Steel, fabricated with a connection for an upper threaded hanger rod and an opening on the underside to allow for a maximum of 30 degrees of angular lower hanger-rod misalignment without binding or reducing isolation efficiency.
2. Dampening Element: Molded, oil-resistant rubber, neoprene, or other elastomeric material with a projecting bushing for the underside opening preventing steel to steel contact.

H. Combination Coil-Spring and Elastomeric-Insert Hanger with Spring and Insert in Compression:

1. Frame: Steel, fabricated for connection to threaded hanger rods and to allow for a maximum of 30 degrees of angular hanger-rod misalignment without binding or reducing isolation efficiency.
2. Outside Spring Diameter: Not less than 80 percent of the compressed height of the spring at rated load.
3. Minimum Additional Travel: 50 percent of the required deflection at rated load.
4. Lateral Stiffness: More than 80 percent of rated vertical stiffness.
5. Overload Capacity: Support 200 percent of rated load, fully compressed, without deformation or failure.
6. Elastomeric Element: Molded, oil-resistant rubber or neoprene. Steel-washer-reinforced cup to support spring and bushing projecting through bottom of frame.
7. Adjustable Vertical Stop: Steel washer with neoprene washer "up-stop" on lower threaded rod.
8. Self-centering hanger rod cap to ensure concentricity between hanger rod and support spring coil.

2.2 FACTORY FINISHES

A. Finish: Manufacturer's standard prime-coat finish ready for field painting.

B. Finish: Manufacturer's standard paint applied to factory-assembled and -tested equipment before shipping.

1. Powder coating on springs and housings.
2. All hardware shall be galvanized. Hot-dip galvanize metal components for exterior use.
3. Baked enamel or powder coat for metal components on isolators for interior use.
4. Color-code or otherwise mark vibration isolation and seismic-control devices to indicate capacity range.

PART 3 - EXECUTION

3.1 EXAMINATION

A. Examine areas and equipment to receive vibration isolation control devices for compliance with requirements for installation tolerances and other conditions affecting performance of the Work.

B. Examine roughing-in of reinforcement and cast-in-place anchors to verify actual locations before installation.

C. Proceed with installation only after unsatisfactory conditions have been corrected.

3.2 APPLICATIONS

A. Multiple Pipe Supports: Secure pipes to trapeze member with clamps approved for application by an agency acceptable to authorities having jurisdiction.

B. Strength of Support Assemblies: Where not indicated, select sizes of components so strength will be adequate to carry present and future static within specified loading limits.

3.3 VIBRATION CONTROL DEVICE INSTALLATION

A. Coordinate the location of embedded connection hardware with supported equipment attachment and mounting points and with requirements for concrete reinforcement and formwork specified in Section 033000 "Cast-in-Place Concrete." Section 033053 "Miscellaneous Cast-in-Place Concrete."

B. Installation of vibration isolators must not cause any change of position of equipment, piping, or ductwork resulting in stresses or misalignment.

END OF SECTION 220548.13

SECTION 220553 - IDENTIFICATION FOR PLUMBING PIPING AND EQUIPMENT

PART 1 - GENERAL

1.1 RELATED DOCUMENTS

A. Drawings and general provisions of the Contract, including General and Supplementary Conditions and Division 01 Specification Sections, apply to this Section.

1.2 SUMMARY

A. Section Includes:

1. Equipment labels.
2. Warning signs and labels.
3. Pipe labels.
4. Stencils.
5. Valve tags.
6. Warning tags.

1.3 ACTION SUBMITTALS

A. Product Data: For each type of product indicated.

B. Samples: For color, letter style, and graphic representation required for each identification material and device.

C. Equipment Label Schedule: Include a listing of all equipment to be labeled with the proposed content for each label.

D. Valve numbering scheme.

E. Valve Schedules: For each piping system to include in maintenance manuals.

1.4 COORDINATION

A. Coordinate installation of identifying devices with completion of covering and painting of surfaces where devices are to be applied.

B. Coordinate installation of identifying devices with locations of access panels and doors.

C. Install identifying devices before installing acoustical ceilings and similar concealment.

PART 2 - PRODUCTS

2.1 EQUIPMENT LABELS

A. Metal Labels for Equipment:

1. Material and Thickness: Brass, 0.032-inch minimum thickness, and having predrilled or stamped holes for attachment hardware.
2. Minimum Label Size: Length and width vary for required label content, but not less than 2-1/2 by 3/4 inch.
3. Minimum Letter Size: 1/4 inch for name of units if viewing distance is less than 24 inches, 1/2 inch for viewing distances up to 72 inches, and proportionately larger lettering for greater viewing distances. Include secondary lettering two-thirds to three-quarters the size of principal lettering.
4. Fasteners: Stainless-steel rivets or self-tapping screws.
5. Adhesive: Contact-type permanent adhesive, compatible with label and with substrate.

B. Plastic Labels for Equipment:

1. Material and Thickness: Multilayer, multicolor, plastic labels for mechanical engraving, 1/8 inch thick, and having predrilled holes for attachment hardware.
2. Maximum Temperature: Able to withstand temperatures up to 160 deg F.
3. Minimum Label Size: Length and width vary for required label content, but not less than 2-1/2 by 3/4 inch.
4. Minimum Letter Size: 1/4 inch for name of units if viewing distance is less than 24 inches, 1/2 inch for viewing distances up to 72 inches, and proportionately larger lettering for greater viewing distances. Include secondary lettering two-thirds to three-quarters the size of principal lettering.
5. Fasteners: Stainless-steel rivets or self-tapping screws.
6. Adhesive: Contact-type permanent adhesive, compatible with label and with substrate.

C. Label Content: Include equipment's Drawing designation or unique equipment number, Drawing numbers where equipment is indicated (plans, details, and schedules), and the Specification Section number and title where equipment is specified.

D. Equipment Label Schedule: For each item of equipment to be labeled, on 8-1/2-by-11-inch bond paper. Tabulate equipment identification number, and identify Drawing numbers where equipment is indicated (plans, details, and schedules) and the Specification Section number and title where equipment is specified. Equipment schedule shall be included in operation and maintenance data.

2.2 WARNING SIGNS AND LABELS

A. Material and Thickness: Multilayer, multicolor, plastic labels for mechanical engraving, 1/8 inch thick, and having predrilled holes for attachment hardware.

B. Maximum Temperature: Able to withstand temperatures up to 160 deg F.

C. Minimum Label Size: Length and width vary for required label content, but not less than 2-1/2 by 3/4 inch.

D. Minimum Letter Size: 1/4 inch for name of units if viewing distance is less than 24 inches, 1/2 inch for viewing distances up to 72 inches, and proportionately larger lettering for greater viewing distances. Include secondary lettering two-thirds to three-quarters the size of principal lettering.

E. Fasteners: Stainless-steel rivets or self-tapping screws.

F. Adhesive: Contact-type permanent adhesive, compatible with label and with substrate.

G. Label Content: Include caution and warning information plus emergency notification instructions.

2.3 PIPE LABELS

A. General Requirements for Manufactured Pipe Labels: Preprinted, color-coded, with lettering indicating service, and showing flow direction.

B. Pretensioned Pipe Labels: Precoiled, semirigid plastic formed to cover full circumference of pipe and to attach to pipe without fasteners or adhesive.

C. Self-Adhesive Pipe Labels: Printed plastic with contact-type, permanent-adhesive backing.

D. Pipe Label Contents: Include identification of piping service using same designations or abbreviations as used on Drawings; also include pipe size and an arrow indicating flow direction.

1. Flow-Direction Arrows: Integral with piping-system service lettering to accommodate both directions or as separate unit on each pipe label to indicate flow direction.
2. Lettering Size: At least 1/2 inch.

2.4 STENCILS

A. Stencils for Piping:

1. Lettering Size: Size letters according to ASME A13.1 for piping.
2. Stencil Paint: Exterior, gloss, alkyd enamel in colors complying with recommendations in ASME A13.1 unless otherwise indicated. Paint may be in pressurized spray-can form.
3. Identification Paint: Exterior, alkyd enamel in colors according to ASME A13.1 unless otherwise indicated. Paint may be in pressurized spray-can form.

2.5 VALVE TAGS

A. Valve Tags: Stamped or engraved with 1/4-inch letters for piping system abbreviation and 1/2-inch numbers.

1. Tag Material: Brass, 0.032-inch minimum thickness, and having predrilled or stamped holes for attachment hardware.
2. Fasteners: Brass beaded chain.

B. Valve Schedules: For each piping system, on 8-1/2-by-11-inch bond paper. Tabulate valve number, piping system, system abbreviation (as shown on valve tag), location of valve (room or space), normal-operating position (open, closed, or modulating), and variations for identification. Mark valves for emergency shutoff and similar special uses.

1. Valve-tag schedule shall be included in operation and maintenance data.

2.6 WARNING TAGS

A. Description: Preprinted or partially preprinted accident-prevention tags of plasticized card stock with matte finish suitable for writing.

1. Size: 3 by 5-1/4 inches minimum.
2. Fasteners: Brass grommet and wire.
3. Nomenclature: Large-size primary caption such as "DANGER," "CAUTION," or "DO NOT OPERATE."
4. Color: Safety yellow background with black lettering.

PART 3 - EXECUTION

3.1 PREPARATION

A. Clean piping and equipment surfaces of substances that could impair bond of identification devices, including dirt, oil, grease, release agents, and incompatible primers, paints, and encapsulants.

3.2 GENERAL INSTALLATION REQUIREMENTS

A. Coordinate installation of identifying devices with completion of covering and painting of surfaces where devices are to be applied.

B. Coordinate installation of identifying devices with locations of access panels and doors.

C. Install identifying devices before installing acoustical ceilings and similar concealment.

3.3 EQUIPMENT LABEL INSTALLATION

A. Install or permanently fasten labels on each major item of mechanical equipment.

B. Locate equipment labels where accessible and visible.

3.4 PIPE LABEL INSTALLATION

A. Piping Color Coding: Painting of piping is specified in Section 099123 "Interior Painting." and Section 099600 "High-Performance Coatings."

B. Stenciled Pipe Label Option: Stenciled labels may be provided instead of manufactured pipe labels, at Installer's option. Install stenciled pipe labels, complying with ASME A13.1, with painted, color-coded bands or rectangles on each piping system.

1. Identification Paint: Use for contrasting background.
2. Stencil Paint: Use for pipe marking.

C. Pipe Label Locations: Locate pipe labels where piping is exposed or above accessible ceilings in finished spaces; machine rooms; accessible maintenance spaces such as shafts, tunnels, and plenums; and exterior exposed locations as follows:

1. Near each valve and control device.
2. Near each branch connection, excluding short takeoffs for fixtures and terminal units. Where flow pattern is not obvious, mark each pipe at branch.
3. Near penetrations through walls, floors, ceilings, and inaccessible enclosures.
4. At access doors, manholes, and similar access points that permit view of concealed piping.
5. Near major equipment items and other points of origination and termination.
6. Spaced at maximum intervals of 50 feet along each run. Reduce intervals to 25 feet in areas of congested piping and equipment.
7. On piping above removable acoustical ceilings. Omit intermediately spaced labels.

D. Directional Flow Arrows: Arrows shall be used to indicate direction of flow in pipes, including pipes where flow is allowed in both directions.

3.5 VALVE-TAG INSTALLATION

A. Install tags on valves and control devices in piping systems, except check valves, valves within factory-fabricated equipment units, shutoff valves, faucets, convenience and lawn-watering hose connections, and similar roughing-in connections of end-use fixtures and units. List tagged valves in a valve schedule.

B. Valve-Tag Application Schedule: Tag valves according to size, shape, and color scheme and with captions similar to those indicated in the following subparagraphs:

1. Valve-Tag Size and Shape:

a. Cold Water: 1-1/2 inches, round.
b. Hot Water: 1-1/2 inches, round.

3.6 WARNING-TAG INSTALLATION

A. Write required message on, and attach warning tags to, equipment and other items where required.

END OF SECTION 220553

SECTION 220719 - PLUMBING PIPING INSULATION

PART 1 - GENERAL

1.1 RELATED DOCUMENTS

A. Drawings and general provisions of the Contract, including General and Supplementary Conditions and Division 01 Specification Sections, apply to this Section.

1.2 SUMMARY

A. Section includes insulating the following plumbing piping services:
   1. Domestic cold-water piping.

1.3 ACTION SUBMITTALS

A. Product Data: For each type of product indicated. Include thermal conductivity, water-vapor permeance thickness, and jackets (both factory- and field-applied, if any).

B. Shop Drawings: Include plans, elevations, sections, details, and attachments to other work.
   1. Detail application of protective shields, saddles, and inserts at hangers for each type of insulation and hanger.
   2. Detail attachment and covering of heat tracing inside insulation.
   3. Detail insulation application at pipe expansion joints for each type of insulation.
   4. Detail insulation application at elbows, fittings, flanges, valves, and specialties for each type of insulation.
   5. Detail removable insulation at piping specialties, equipment connections, and access panels.
   6. Detail application of field-applied jackets.
   7. Detail application at linkages of control devices.

1.4 INFORMATIONAL SUBMITTALS

A. Qualification Data: For qualified Installer.

B. Material Test Reports: From a qualified testing agency acceptable to authorities having jurisdiction indicating, interpreting, and certifying test results for compliance of insulation materials, sealers, attachments, cements, and jackets, with requirements indicated. Include dates of tests and test methods employed.

C. Field quality-control reports.

1.5 QUALITY ASSURANCE

A. Installer Qualifications: Skilled mechanics who have successfully completed an apprenticeship program or another craft training program certified by the Department of Labor, Bureau of Apprenticeship and Training.

B. Surface-Burning Characteristics: For insulation and related materials, as determined by testing identical products according to ASTM E 84 by a testing agency acceptable to authorities having jurisdiction. Factory label insulation and jacket materials and adhesive, mastic, tapes, and cement material containers, with appropriate markings of applicable testing agency.
   1. Insulation Installed Indoors: Flame-spread index of 25 or less, and smoke-developed index of 50 or less.
   2. Insulation Installed Outdoors: Flame-spread index of 75 or less, and smoke-developed index of 150 or less.

C. Comply with the following applicable standards and other requirements specified for miscellaneous components:
   1. Supply and Drain Protective Shielding Guards: ICC A117.1.

1.6 DELIVERY, STORAGE, AND HANDLING

A. Packaging: Insulation material containers shall be marked by manufacturer with appropriate ASTM standard designation, type and grade, and maximum use temperature.

1.7 COORDINATION

A. Coordinate sizes and locations of supports, hangers, and insulation shields specified in Section 220529 "Hangers and Supports for Plumbing Piping and Equipment."

B. Coordinate clearance requirements with piping Installer for piping insulation application. Before preparing piping Shop Drawings, establish and maintain clearance requirements for installation of insulation and field-applied jackets and finishes and for space required for maintenance.

C. Coordinate installation and testing of heat tracing.

1.8 SCHEDULING

A. Schedule insulation application after pressure testing systems and, where required, after installing and testing heat tracing. Insulation application may begin on segments that have satisfactory test results.

B. Complete installation and concealment of plastic materials as rapidly as possible in each area of construction.

PART 2 - PRODUCTS

2.1 INSULATION MATERIALS

A. Comply with requirements in "Piping Insulation Schedule, General," "Indoor Piping Insulation Schedule," "Outdoor, Aboveground Piping Insulation Schedule," and "Outdoor, Underground Piping Insulation Schedule" articles for where insulating materials shall be applied.

B. Products shall not contain asbestos, lead, mercury, or mercury compounds.

C. Products that come in contact with stainless steel shall have a leachable chloride content of less than 50 ppm when tested according to ASTM C 871.

D. Insulation materials for use on austenitic stainless steel shall be qualified as acceptable according to ASTM C 795.

E. Foam insulation materials shall not use CFC or HCFC blowing agents in the manufacturing process.

F. Flexible Elastomeric Insulation: Closed-cell, sponge- or expanded-rubber materials. Comply with ASTM C 534, Type I for tubular materials.
   1. Products:
      a. Armaflex
      b. K-Flex

G. Mineral-Fiber, Preformed Pipe Insulation:
   1. Products:
      a. Johns Manville; Micro-Lok.
      b. Knauf Insulation; 1000(Pipe Insulation.
      c. Owens Corning; Fiberglas Pipe Insulation.

   2. Type I, 850 Deg F Materials: Mineral or glass fibers bonded with a thermosetting resin. Comply with ASTM C 547, Type I, Grade A, with factory-applied ASJ. Factory-applied jacket requirements are specified in "Factory-Applied Jackets" Article.

2.2 INSULATING CEMENTS

A. Mineral-Fiber Insulating Cement: Comply with ASTM C 195.
   1. Products:
      a. Insulco, Division of MFS, Inc.; Triple I.
      b. P. K. Insulation Mfg. Co., Inc.; Super-Stik.

2.3 ADHESIVES

A. Materials shall be compatible with insulation materials, jackets, and substrates and for bonding insulation to itself and to surfaces to be insulated, unless otherwise indicated.

B. Flexible Elastomeric and Polyolefin Adhesive: Comply with MIL-A-24179A, Type II, Class I.
   1. Products:
      a. Foster Products Corporation, H. B. Fuller Company
      b. Aeroflex
      c. Armacell
      d. K-Flex
   2. For indoor applications, adhesive shall have a VOC content of 50 g/L or less when calculated according to 40 CFR 59, Subpart D (EPA Method 24).

3. Adhesive shall comply with the testing and product requirements of the California Department of Health Services' "Standard Practice for the Testing of Volatile Organic Emissions from Various Sources Using Small-Scale Environmental Chambers."

C. Mineral-Fiber Adhesive: Comply with MIL-A-3316C, Class 2, Grade A.
1. Products:
   a. Childers Products, Division of ITW; CP-82.
   b. Foster Products Corporation, H. B. Fuller Company; 85-20.
   c. ITW TACC, Division of Illinois Tool Works; S-90/80.
   d. Marathon Industries, Inc.; 225.
   e. Mon-Eco Industries, Inc.; 22-25.
2. For indoor applications, adhesive shall have a VOC content of 80 g/L or less when calculated according to 40 CFR 59, Subpart D (EPA Method 24).
3. Adhesive shall comply with the testing and product requirements of the California Department of Health Services' "Standard Practice for the Testing of Volatile Organic Emissions from Various Sources Using Small-Scale Environmental Chambers."

D. ASJ Adhesive, and FSK Jacket Adhesive: Comply with MIL-A-3316C, Class 2, Grade A for bonding insulation jacket lap seams and joints.
1. Products:
   a. Childers Products, Division of ITW; CP-82.
   b. Foster Products Corporation, H. B. Fuller Company; 85-20.
   c. ITW TACC, Division of Illinois Tool Works; S-90/80.
   d. Marathon Industries, Inc.; 225.
   e. Mon-Eco Industries, Inc.; 22-25.
2. For indoor applications, adhesive shall have a VOC content of 50 g/L or less when calculated according to 40 CFR 59, Subpart D (EPA Method 24).
3. Adhesive shall comply with the testing and product requirements of the California Department of Health Services' "Standard Practice for the Testing of Volatile Organic Emissions from Various Sources Using Small-Scale Environmental Chambers."

2.4 MASTICS

A. Materials shall be compatible with insulation materials, jackets, and substrates; comply with MIL-PRF-19565C, Type II.
1. For indoor applications, use mastics that have a VOC content of 50 g/L or less when calculated according to 40 CFR 59, Subpart D (EPA Method 24).

B. Vapor-Barrier Mastic: Water based; suitable for indoor use on below-ambient services.
1. Products:
   a. Childers Products, Division of ITW; CP-35.
   b. Foster Products Corporation, H. B. Fuller Company; 30-90.
   c. ITW TACC, Division of Illinois Tool Works; CB-50.
   d. Marathon Industries, Inc.; 590.
   e. Mon-Eco Industries, Inc.; 55-40.
   f. Vimasco Corporation; 749.
2. Water-Vapor Permeance: ASTM E 96/E 96M, Procedure B, 0.013 perm at 43-mil dry film thickness.
3. Service Temperature Range: Minus 20 to plus 180 deg F.
4. Solids Content: ASTM D 1644, 58 percent by volume and 70 percent by weight.

5. Color: White.

2.5 SEALANTS

A. Joint Sealants:
1. Materials shall be compatible with insulation materials, jackets, and substrates.
2. Permanently flexible, elastomeric sealant.
3. Service Temperature Range: Minus 100 to plus 300 deg F.
4. Color: White or gray.
5. For indoor applications, sealants shall have a VOC content of 420 g/L or less when calculated according to 40 CFR 59, Subpart D (EPA Method 24).
6. Sealants shall comply with the testing and product requirements of the California Department of Health Services' "Standard Practice for the Testing of Volatile Organic Emissions from Various Sources Using Small-Scale Environmental Chambers."

B. FSK and Metal Jacket Flashing Sealants:
1. Products:
   a. Childers Products, Division of ITW; CP-76-8.
   b. Foster Products Corporation, H. B. Fuller Company; 95-44.
   c. Marathon Industries, Inc.; 405.
   d. Mon-Eco Industries, Inc.; 44-05.
   e. Vimasco Corporation; 750.
2. Materials shall be compatible with insulation materials, jackets, and substrates.
3. Fire- and water-resistant, flexible, elastomeric sealant.
4. Service Temperature Range: Minus 40 to plus 250 deg F.
5. Color: Aluminum.
6. For indoor applications, sealants shall have a VOC content of 420 g/L or less when calculated according to 40 CFR 59, Subpart D (EPA Method 24).
7. Sealants shall comply with the testing and product requirements of the California Department of Health Services' "Standard Practice for the Testing of Volatile Organic Emissions from Various Sources Using Small-Scale Environmental Chambers."

C. ASJ Flashing Sealants, and Vinyl, PVDC, and PVC Jacket Flashing Sealants:
1. Products:
   a. Childers Products, Division of ITW; CP-76.
2. Materials shall be compatible with insulation materials, jackets, and substrates.
3. Fire- and water-resistant, flexible, elastomeric sealant.
4. Service Temperature Range: Minus 40 to plus 250 deg F.
5. Color: White.
6. For indoor applications, sealants shall have a VOC content of 420 g/L or less when calculated according to 40 CFR 59, Subpart D (EPA Method 24).
7. Sealants shall comply with the testing and product requirements of the California Department of Health Services' "Standard Practice for the Testing of Volatile Organic Emissions from Various Sources Using Small-Scale Environmental Chambers."

2.6 FACTORY-APPLIED JACKETS

A. Insulation system schedules indicate factory-applied jackets on various applications. When factory-applied jackets are indicated, comply with the following:

1. ASJ: White, kraft-paper, fiberglass-reinforced scrim with aluminum-foil backing; complying with ASTM C 1136, Type I.

2.7 FIELD-APPLIED FABRIC-REINFORCING MESH

A. Woven Glass-Fiber Fabric: Approximately 2 oz./sq. yd. with a thread count of 10 strands by 10 strands/sq. in. for covering pipe and pipe fittings.

2.8 FIELD-APPLIED CLOTHS

A. Woven Glass-Fiber Fabric: Comply with MIL-C-20079H, Type I, plain weave, and presized a minimum of 8 oz./sq. yd..

2.9 FIELD-APPLIED JACKETS

A. Field-applied jackets shall comply with ASTM C 921, Type I, unless otherwise indicated.

B. Metal Jacket:

1. Products:
   a. Childers Products, Division of ITW; Metal Jacketing Systems.
   b. PABCO Metals Corporation; Surefit.
   c. RPR Products, Inc.; Insul-Mate.

2. Aluminum Jacket: Comply with ASTM B 209, Alloy 3003, 3005, 3105, or 5005, Temper H-14.
   a. Sheet and roll stock ready for shop or field sizing.
   b. Finish and thickness are indicated in field-applied jacket schedules.
   c. Moisture Barrier for Indoor Applications: 3-mil-thick, heat-bonded polyethylene and kraft paper
   d. Moisture Barrier for Outdoor Applications: 3-mil-thick, heat-bonded polyethylene and kraft paper.
   e. Factory-Fabricated Fitting Covers:

      1) Same material, finish, and thickness as jacket.
      2) Preformed 2-piece or gore, 45- and 90-degree, short- and long-radius elbows.
      3) Tee covers.
      4) Flange and union covers.
      5) End caps.
      6) Beveled collars.
      7) Valve covers.
      8) Field fabricate fitting covers only if factory-fabricated fitting covers are not available.

C. Underground Direct-Buried Jacket: 125-mil-thick vapor barrier and waterproofing membrane consisting of a rubberized bituminous resin reinforced with a woven-glass fiber or polyester scrim and laminated aluminum foil.

2.10 TAPES

A. ASJ Tape: White vapor-retarder tape matching factory-applied jacket with acrylic adhesive, complying with ASTM C 1136.
   1. Products:
      a. Avery Dennison Corporation, Specialty Tapes Division; Fasson 0835.
      b. Compac Corp.; 104 and 105.
      c. Ideal Tape Co., Inc., an American Biltrite Company; 428 AWF ASJ.
      d. Venture Tape; 1540 CW Plus, 1542 CW Plus, and 1542 CW Plus/SQ.
   2. Width: 3 inches.
   3. Thickness: 11.5 mils.
   4. Adhesion: 90 ounces force/inch in width.
   5. Elongation: 2 percent.
   6. Tensile Strength: 40 lbf/inch in width.
   7. ASJ Tape Disks and Squares: Precut disks or squares of ASJ tape.

B. FSK Tape: Foil-face, vapor-retarder tape matching factory-applied jacket with acrylic adhesive; complying with ASTM C 1136.
   1. Products:
      a. Avery Dennison Corporation, Specialty Tapes Division; Fasson 0827.
      b. Compac Corp.; 110 and 111.
      c. Ideal Tape Co., Inc., an American Biltrite Company; 491 AWF FSK.
      d. Venture Tape; 1525 CW, 1528 CW, and 1528 CW/SQ.
   2. Width: 3 inches.
   3. Thickness: 6.5 mils.
   4. Adhesion: 90 ounces force/inch in width.
   5. Elongation: 2 percent.
   6. Tensile Strength: 40 lbf/inch in width.
   7. FSK Tape Disks and Squares: Precut disks or squares of FSK tape.

2.11 SECUREMENTS

A. Bands:
   1. Products:
      a. Childers Products; Bands.
      b. PABCO Metals Corporation; Bands.
      c. RPR Products, Inc.; Bands.

   2. Stainless Steel: ASTM A 167 or ASTM A 240/A 240M, Type 316; 0.015 inch thick, 3/4 inch wide.

B. Staples: Outward-clinching insulation staples, nominal 3/4-inch-wide, stainless steel or Monel.

C. Wire: 0.080-inch nickel-copper alloy.

See Editing Instruction No. 1 in the Evaluations for cautions about naming manufacturers. Retain subparagraph and list of manufacturers below. See Section 016000 "Product Requirements."
   1. Manufacturers:
      a. C & F Wire.
      b. Childers Products.

c. PABCO Metals Corporation.
d. RPR Products, Inc.

2.12 PROTECTIVE SHIELDING GUARDS

A. Protective Shielding Pipe Covers:
1. Description: Manufactured plastic wraps for covering plumbing fixture hot- and cold-water supplies and trap and drain piping. Comply with Americans with Disabilities Act (ADA) requirements.

B. Protective Shielding Piping Enclosures:
1. Description: Manufactured plastic enclosure for covering plumbing fixture hot- and cold-water supplies and trap and drain piping. Comply with ADA requirements.

PART 3 - EXECUTION

3.1 EXAMINATION

A. Examine substrates and conditions for compliance with requirements for installation tolerances and other conditions affecting performance of insulation application.
1. Verify that systems to be insulated have been tested and are free of defects.
2. Verify that surfaces to be insulated are clean and dry.

B. Proceed with installation only after unsatisfactory conditions have been corrected.

3.2 PREPARATION

A. Surface Preparation: Clean and prepare surfaces to be insulated. Before insulating, apply a corrosion coating to insulated surfaces as follows:
1. Carbon Steel: Coat carbon steel operating at a service temperature between 32 and 300 deg F with an epoxy coating. Consult coating manufacturer for appropriate coating materials and application methods for operating temperature range.

B. Coordinate insulation installation with the trade installing heat tracing. Comply with requirements for heat tracing that apply to insulation.

C. Mix insulating cements with clean potable water; if insulating cements are to be in contact with stainless-steel surfaces, use demineralized water.

3.3 GENERAL INSTALLATION REQUIREMENTS

A. Install insulation materials, accessories, and finishes with smooth, straight, and even surfaces; free of voids throughout the length of piping including fittings, valves, and specialties.

B. Install insulation materials, forms, vapor barriers or retarders, jackets, and thicknesses required for each item of pipe system as specified in insulation system schedules.

C. Install accessories compatible with insulation materials and suitable for the service. Install accessories that do not corrode, soften, or otherwise attack insulation or jacket in either wet or dry state.

D. Install insulation with longitudinal seams at top and bottom of horizontal runs.

E. Install multiple layers of insulation with longitudinal and end seams staggered.

F. Do not weld brackets, clips, or other attachment devices to piping, fittings, and specialties.

G. Keep insulation materials dry during application and finishing.

H. Install insulation with tight longitudinal seams and end joints. Bond seams and joints with adhesive recommended by insulation material manufacturer.

I. Install insulation with least number of joints practical.

J. Where vapor barrier is indicated, seal joints, seams, and penetrations in insulation at hangers, supports, anchors, and other projections with vapor-barrier mastic.
   1. Install insulation continuously through hangers and around anchor attachments.
   2. For insulation application where vapor barriers are indicated, extend insulation on anchor legs from point of attachment to supported item to point of attachment to structure. Taper and seal ends at attachment to structure with vapor-barrier mastic.
   3. Install insert materials and install insulation to tightly join the insert. Seal insulation to insulation inserts with adhesive or sealing compound recommended by insulation material manufacturer.
   4. Cover inserts with jacket material matching adjacent pipe insulation. Install shields over jacket, arranged to protect jacket from tear or puncture by hanger, support, and shield.

K. Apply adhesives, mastics, and sealants at manufacturer's recommended coverage rate and wet and dry film thicknesses.

L. Install insulation with factory-applied jackets as follows:
   1. Draw jacket tight and smooth.
   2. Cover circumferential joints with 3-inch-wide strips, of same material as insulation jacket. Secure strips with adhesive and outward clinching staples along both edges of strip, spaced 4 inches o.c.
   3. Overlap jacket longitudinal seams at least 1-1/2 inches. Install insulation with longitudinal seams at bottom of pipe. Clean and dry surface to receive self-sealing lap. Staple laps with outward clinching staples along edge at 4 inches o.c.
      a. For below-ambient services, apply vapor-barrier mastic over staples.
   4. Cover joints and seams with tape, according to insulation material manufacturer's written instructions, to maintain vapor seal.
   5. Where vapor barriers are indicated, apply vapor-barrier mastic on seams and joints and at ends adjacent to pipe flanges and fittings.

M. Cut insulation in a manner to avoid compressing insulation more than 75 percent of its nominal thickness.

N. Finish installation with systems at operating conditions. Repair joint separations and cracking due to thermal movement.

O. Repair damaged insulation facings by applying same facing material over damaged areas. Extend patches at least 4 inches beyond damaged areas. Adhere, staple, and seal patches similar to butt joints.

P. For above-ambient services, do not install insulation to the following:
1. Vibration-control devices.
2. Testing agency labels and stamps.
3. Nameplates and data plates.
4. Cleanouts.

3.4 PENETRATIONS

A. Insulation Installation at Roof Penetrations: Install insulation continuously through roof penetrations.
1. Seal penetrations with flashing sealant.
2. For applications requiring only indoor insulation, terminate insulation above roof surface and seal with joint sealant. For applications requiring indoor and outdoor insulation, install insulation for outdoor applications tightly joined to indoor insulation ends. Seal joint with joint sealant.
3. Extend jacket of outdoor insulation outside roof flashing at least 2 inches below top of roof flashing.
4. Seal jacket to roof flashing with flashing sealant.

B. Insulation Installation at Underground Exterior Wall Penetrations: Terminate insulation flush with sleeve seal. Seal terminations with flashing sealant.

C. Insulation Installation at Aboveground Exterior Wall Penetrations: Install insulation continuously through wall penetrations.
1. Seal penetrations with flashing sealant.
2. For applications requiring only indoor insulation, terminate insulation inside wall surface and seal with joint sealant. For applications requiring indoor and outdoor insulation, install insulation for outdoor applications tightly joined to indoor insulation ends. Seal joint with joint sealant.
3. Extend jacket of outdoor insulation outside wall flashing and overlap wall flashing at least 2 inches.
4. Seal jacket to wall flashing with flashing sealant.

D. Insulation Installation at Interior Wall and Partition Penetrations (That Are Not Fire Rated): Install insulation continuously through walls and partitions.

E. Insulation Installation at Fire-Rated Wall and Partition Penetrations: Install insulation continuously through penetrations of fire-rated walls and partitions.
1. Comply with requirements in Section 078413 "Penetration Firestopping" for firestopping and fire-resistive joint sealers.

F. Insulation Installation at Floor Penetrations:
1. Pipe: Install insulation continuously through floor penetrations.

2. Seal penetrations through fire-rated assemblies. Comply with requirements in Section 078413 "Penetration Firestopping."

3.5 GENERAL PIPE INSULATION INSTALLATION

A. Requirements in this article generally apply to all insulation materials except where more specific requirements are specified in various pipe insulation material installation articles.

B. Insulation Installation on Fittings, Valves, Strainers, Flanges, and Unions:
1. Install insulation over fittings, valves, strainers, flanges, unions, and other specialties with continuous thermal and vapor-retarder integrity unless otherwise indicated.
2. Insulate pipe elbows using preformed fitting insulation or mitered fittings made from same material and density as adjacent pipe insulation. Each piece shall be butted tightly against adjoining piece and bonded with adhesive. Fill joints, seams, voids, and irregular surfaces with insulating cement finished to a smooth, hard, and uniform contour that is uniform with adjoining pipe insulation.
3. Insulate tee fittings with preformed fitting insulation or sectional pipe insulation of same material and thickness as used for adjacent pipe. Cut sectional pipe insulation to fit. Butt each section closely to the next and hold in place with tie wire. Bond pieces with adhesive.
4. Insulate valves using preformed fitting insulation or sectional pipe insulation of same material, density, and thickness as used for adjacent pipe. Overlap adjoining pipe insulation by not less than two times the thickness of pipe insulation, or one pipe diameter, whichever is thicker. For valves, insulate up to and including the bonnets, valve stuffing-box studs, bolts, and nuts. Fill joints, seams, and irregular surfaces with insulating cement.
5. Insulate strainers using preformed fitting insulation or sectional pipe insulation of same material, density, and thickness as used for adjacent pipe. Overlap adjoining pipe insulation by not less than two times the thickness of pipe insulation, or one pipe diameter, whichever is thicker. Fill joints, seams, and irregular surfaces with insulating cement. Insulate strainers so strainer basket flange or plug can be easily removed and replaced without damaging the insulation and jacket. Provide a removable reusable insulation cover. For below-ambient services, provide a design that maintains vapor barrier.
6. Insulate flanges and unions using a section of oversized preformed pipe insulation. Overlap adjoining pipe insulation by not less than two times the thickness of pipe insulation, or one pipe diameter, whichever is thicker.
7. Cover segmented insulated surfaces with a layer of finishing cement and coat with a mastic. Install vapor-barrier mastic for below-ambient services and a breather mastic for above-ambient services. Reinforce the mastic with fabric-reinforcing mesh. Trowel the mastic to a smooth and well-shaped contour.
8. For services not specified to receive a field-applied jacket except for flexible elastomeric and polyolefin, install fitted PVC cover over elbows, tees, strainers, valves, flanges, and unions. Terminate ends with PVC end caps. Tape PVC covers to adjoining insulation facing using PVC tape.
9. Stencil or label the outside insulation jacket of each union with the word "union." Match size and color of pipe labels.

C. Insulate instrument connections for thermometers, pressure gages, pressure temperature taps, test connections, flow meters, sensors, switches, and transmitters on insulated pipes. Shape

insulation at these connections by tapering it to and around the connection with insulating cement and finish with finishing cement, mastic, and flashing sealant.

D. Install removable insulation covers at locations indicated. Installation shall conform to the following:
   1. Make removable flange and union insulation from sectional pipe insulation of same thickness as that on adjoining pipe. Install same insulation jacket as adjoining pipe insulation.
   2. When flange and union covers are made from sectional pipe insulation, extend insulation from flanges or union long at least two times the insulation thickness over adjacent pipe insulation on each side of flange or union. Secure flange cover in place with stainless-steel or aluminum bands. Select band material compatible with insulation and jacket.
   3. Construct removable valve insulation covers in same manner as for flanges, except divide the two-part section on the vertical center line of valve body.
   4. When covers are made from block insulation, make two halves, each consisting of mitered blocks wired to stainless-steel fabric. Secure this wire frame, with its attached insulation, to flanges with tie wire. Extend insulation at least 2 inches over adjacent pipe insulation on each side of valve. Fill space between flange or union cover and pipe insulation with insulating cement. Finish cover assembly with insulating cement applied in two coats. After first coat is dry, apply and trowel second coat to a smooth finish.
   5. Unless a PVC jacket is indicated in field-applied jacket schedules, finish exposed surfaces with a metal jacket.

3.6 INSTALLATION OF FLEXIBLE ELASTOMERIC INSULATION

A. Seal longitudinal seams and end joints with manufacturer's recommended adhesive to eliminate openings in insulation that allow passage of air to surface being insulated.

B. Insulation Installation on Pipe Flanges:
   1. Install pipe insulation to outer diameter of pipe flange.
   2. Make width of insulation section same as overall width of flange and bolts, plus twice the thickness of pipe insulation.
   3. Fill voids between inner circumference of flange insulation and outer circumference of adjacent straight pipe segments with cut sections of sheet insulation of same thickness as pipe insulation.
   4. Secure insulation to flanges and seal seams with manufacturer's recommended adhesive to eliminate openings in insulation that allow passage of air to surface being insulated.

C. Insulation Installation on Pipe Fittings and Elbows:
   1. Install mitered sections of pipe insulation.
   2. Secure insulation materials and seal seams with manufacturer's recommended adhesive to eliminate openings in insulation that allow passage of air to surface being insulated.

D. Insulation Installation on Valves and Pipe Specialties:
   1. Install preformed valve covers manufactured of same material as pipe insulation when available.
   2. When preformed valve covers are not available, install cut sections of pipe and sheet insulation to valve body. Arrange insulation to permit access to packing and to allow valve operation without disturbing insulation.
   3. Install insulation to flanges as specified for flange insulation application.

4. Secure insulation to valves and specialties and seal seams with manufacturer's recommended adhesive to eliminate openings in insulation that allow passage of air to surface being insulated.

3.7 INSTALLATION OF MINERAL-FIBER INSULATION

A. Insulation Installation on Straight Pipes and Tubes:
   1. Secure each layer of preformed pipe insulation to pipe with wire or bands and tighten bands without deforming insulation materials.
   2. Where vapor barriers are indicated, seal longitudinal seams, end joints, and protrusions with vapor-barrier mastic and joint sealant.
   3. For insulation with factory-applied jackets on above-ambient surfaces, secure laps with outward clinched staples at 6 inches o.c.
   4. For insulation with factory-applied jackets on below-ambient surfaces, do not staple longitudinal tabs. Instead, secure tabs with additional adhesive as recommended by insulation material manufacturer and seal with vapor-barrier mastic and flashing sealant.

B. Insulation Installation on Pipe Flanges:
   1. Install preformed pipe insulation to outer diameter of pipe flange.
   2. Make width of insulation section same as overall width of flange and bolts, plus twice the thickness of pipe insulation.
   3. Fill voids between inner circumference of flange insulation and outer circumference of adjacent straight pipe segments with mineral-fiber blanket insulation.
   4. Install jacket material with manufacturer's recommended adhesive, overlap seams at least 1 inch, and seal joints with flashing sealant.

C. Insulation Installation on Pipe Fittings and Elbows:
   1. Install preformed sections of same material as straight segments of pipe insulation when available.
   2. When preformed insulation elbows and fittings are not available, install mitered sections of pipe insulation, to a thickness equal to adjoining pipe insulation. Secure insulation materials with wire or bands.

D. Insulation Installation on Valves and Pipe Specialties:
   1. Install preformed sections of same material as straight segments of pipe insulation when available.
   2. When preformed sections are not available, install mitered sections of pipe insulation to valve body.
   3. Arrange insulation to permit access to packing and to allow valve operation without disturbing insulation.
   4. Install insulation to flanges as specified for flange insulation application.

3.8 FIELD-APPLIED JACKET INSTALLATION

A. Where glass-cloth jackets are indicated, install directly over bare insulation or insulation with factory-applied jackets.
   1. Draw jacket smooth and tight to surface with 2-inch overlap at seams and joints.
   2. Embed glass cloth between two 0.062-inch-thick coats of lagging adhesive.
   3. Completely encapsulate insulation with coating, leaving no exposed insulation.

B. Where FSK jackets are indicated, install as follows:
   1. Draw jacket material smooth and tight.
   2. Install lap or joint strips with same material as jacket.
   3. Secure jacket to insulation with manufacturer's recommended adhesive.
   4. Install jacket with 1-1/2-inch laps at longitudinal seams and 3-inch-wide joint strips at end joints.
   5. Seal openings, punctures, and breaks in vapor-retarder jackets and exposed insulation with vapor-barrier mastic.

C. Where metal jackets are indicated, install with 2-inch overlap at longitudinal seams and end joints. Overlap longitudinal seams arranged to shed water. Seal end joints with weatherproof sealant recommended by insulation manufacturer. Secure jacket with stainless-steel bands 12 inches o.c. and at end joints.

3.9 FINISHES

A. Insulation with ASJ, Glass-Cloth, or Other Paintable Jacket Material: Paint jacket with paint system identified below and as specified in Section 099113 "Exterior Painting" and Section 099123 "Interior Painting."
   1. Flat Acrylic Finish: Two finish coats over a primer that is compatible with jacket material and finish coat paint. Add fungicidal agent to render fabric mildew proof.
      a. Finish Coat Material: Interior, flat, latex-emulsion size.

B. Flexible Elastomeric Thermal Insulation: After adhesive has fully cured, apply two coats of insulation manufacturer's recommended protective coating.

C. Color: Final color as selected by Engineer. Vary first and second coats to allow visual inspection of the completed Work.

D. Do not field paint aluminum or stainless-steel jackets.

3.10 FIELD QUALITY CONTROL

A. Perform tests and inspections.

B. Tests and Inspections:
   1. Inspect pipe, fittings, strainers, and valves, randomly selected by Engineer, by removing field-applied jacket and insulation in layers in reverse order of their installation. Extent of inspection shall be limited to three locations of straight pipe, three locations of threaded fittings, three locations of welded fittings, two locations of threaded strainers, two locations of welded strainers, three locations of threaded valves, and three locations of flanged valves for each pipe service defined in the "Piping Insulation Schedule, General" Article.

C. All insulation applications will be considered defective Work if sample inspection reveals noncompliance with requirements.

3.11 EQUIPMENT INSULATION SCHEDULE

A. Insulation materials and thicknesses are identified below. If more than one material is listed for a type of equipment, selection from materials listed is Contractor's option.

B. Insulate indoor and outdoor equipment in paragraphs below that is not factory insulated.

C. Domestic hot-water storage tank insulation shall be the following, of thickness to provide an R-value of 13: Mineral-fiber pipe and tank.

3.12 PIPING INSULATION SCHEDULE, GENERAL

A. Acceptable preformed pipe and tubular insulation materials and thicknesses are identified for each piping system and pipe size range. If more than one material is listed for a piping system, selection from materials listed is Contractor's option.

B. Items Not Insulated: Unless otherwise indicated, do not install insulation on the following:
   1. Drainage piping located in crawl spaces.
   2. Underground piping.
   3. Chrome-plated pipes and fittings unless there is a potential for personnel injury.

3.13 INDOOR PIPING INSULATION SCHEDULE

A. Domestic Cold Water Piping embedded in walls:
   1. All Pipe Sizes: Insulation shall be the following:
      a. Flexible Elastomeric: 1 inch thick, with two coats of protective coating recommended by the insulation manufacturer.

B. Condensate and Equipment Drain Water below 60 Deg F, and horizontal floor drain piping in ceiling plenums, receiving condensate:
   1. All Pipe Sizes: Insulation shall be the following:
      a. Flexible Elastomeric: 3/4 inch thick, with two coats of protective coating recommended by the insulation manufacturer.

C. Floor Drains, Traps, and Sanitary Drain Piping within 10 Feet of Drain Receiving Condensate and Equipment Drain Water below 60 Deg F:
   1. All Pipe Sizes: Insulation shall be the following:
      a. Flexible Elastomeric: 1 inch thick.

D. Vapor barrier on all piping, except on hot water piping.

E. Insulation shall be painted where exposed to view. Coordinate with Engineer.

3.14 OUTDOOR, ABOVEGROUND PIPING INSULATION SCHEDULE

A. Domestic Water Piping:
   1. All Pipe Sizes: Insulation shall be the following:
      a. Flexible Elastomeric: 1 inch thick.
      b. Vapor barrier.

3.15 OUTDOOR, FIELD-APPLIED JACKET SCHEDULE

A. Install jacket over insulation material. For insulation with factory-applied jacket, install the field-applied jacket over the factory-applied jacket.

B. Piping, Exposed:
   1. Aluminum, Smooth: 0.020 inch thick.

3.16 UNDERGROUND, FIELD-INSTALLED INSULATION JACKET

A. For underground direct-buried piping applications, install underground direct-buried jacket over insulation material.

END OF SECTION 220719

SECTION 221113 - FACILITY WATER DISTRIBUTION PIPING

PART 1 - GENERAL

1.1 RELATED DOCUMENTS

A. Drawings and general provisions of the Contract, including General and Supplementary Conditions and Division 01 Specification Sections, apply to this Section.

1.2 SUMMARY

A. This Section includes water-distribution, and fire-service mains piping and related components outside the building for water service.

1.3 ACTION SUBMITTALS

A. Product Data: For each type of product indicated.

B. Shop Drawings: Detail precast concrete vault assemblies and indicate dimensions, method of field assembly, and components.

1.4 INFORMATIONAL SUBMITTALS

A. Coordination Drawings: For piping and specialties including relation to other services in same area, drawn to scale. Show piping and specialty sizes and valves, meter and specialty locations, and elevations.

B. Field quality-control test reports.

1.5 CLOSEOUT SUBMITTALS

A. Operation and Maintenance Data: For water valves and specialties to include in emergency, operation, and maintenance manuals.

1.6 QUALITY ASSURANCE

A. Regulatory Requirements:

1. Comply with requirements of utility company supplying water. Include tapping of water mains and backflow prevention.
2. Comply with standards of authorities having jurisdiction for potable-water-service piping, including materials, installation, testing, and disinfection.
3. Comply with standards of authorities having jurisdiction for fire-suppression water-service piping, including materials, hose threads, installation, and testing.

B. Piping materials shall bear label, stamp, or other markings of specified testing agency.

C. Electrical Components, Devices, and Accessories: Listed and labeled as defined in NFPA 70, Article 100, by a testing agency acceptable to authorities having jurisdiction, and marked for intended use.

D. Comply with ASTM F 645 for selection, design, and installation of thermoplastic water piping.

E. Comply with FMG's "Approval Guide" or UL's "Fire Protection Equipment Directory" for fire-service-main products.

F. NFPA Compliance: Comply with NFPA 24 for materials, installations, tests, flushing, and valve and hydrant supervision for fire-service-main piping for fire suppression.

G. NSF Compliance:

1. Comply with NSF 14 for plastic potable-water-service piping. Include marking "NSF-pw" on piping.
2. Comply with NSF 61 Annex G for materials for water-service piping and specialties for domestic water.

1.7 DELIVERY, STORAGE, AND HANDLING

A. Preparation for Transport: Prepare valves, including fire hydrants, according to the following:

1. Ensure that valves are dry and internally protected against rust and corrosion.
2. Protect valves against damage to threaded ends and flange faces.
3. Set valves in best position for handling. Set valves closed to prevent rattling.

B. During Storage: Use precautions for valves, including fire hydrants, according to the following:

1. Do not remove end protectors unless necessary for inspection; then reinstall for storage.
2. Protect from weather. Store indoors and maintain temperature higher than ambient dew-point temperature. Support off the ground or pavement in watertight enclosures when outdoor storage is necessary.

C. Handling: Use sling to handle valves and fire hydrants if size requires handling by crane or lift. Rig valves to avoid damage to exposed parts. Do not use handwheels or stems as lifting or rigging points.

D. Deliver piping with factory-applied end caps. Maintain end caps through shipping, storage, and handling to prevent pipe-end damage and to prevent entrance of dirt, debris, and moisture.

E. Protect stored piping from moisture and dirt. Elevate above grade. Do not exceed structural capacity of floor when storing inside.

F. Protect flanges, fittings, and specialties from moisture and dirt.

G. Store plastic piping protected from direct sunlight. Support to prevent sagging and bending.

1.8 PROJECT CONDITIONS

A. Interruption of Existing Water-Distribution Service: Do not interrupt service to facilities occupied by Owner or others unless permitted under the following conditions and then only after arranging to provide temporary water-distribution service according to requirements indicated:

1. Notify Owner no fewer than two days in advance of proposed interruption of service.
2. Do not proceed with interruption of water-distribution service without Owner's written permission.

1.9 COORDINATION

A. Coordinate connection to water main with utility company.

PART 2 - PRODUCTS

A. Comply with requirements in "Piping Application" Article for applications of pipe, tube, fitting materials, and joining methods for specific services, service locations, and pipe sizes.

B. Potable-water piping and components shall comply with NSF 14, NSF 61, and NSF 372. **Include marking "NSF-pw" on piping.**

2.2 DUCTILE-IRON PIPE AND FITTINGS

A. Mechanical-Joint, Ductile-Iron Pipe: AWWA C151, with mechanical-joint bell and plain spigot end unless grooved or flanged ends are indicated.

1. Mechanical-Joint, Ductile-Iron Fittings: AWWA C110, ductile- or gray-iron standard pattern or AWWA C153, ductile-iron compact pattern.
2. Glands, Gaskets, and Bolts: AWWA C111, ductile- or gray-iron glands, rubber gaskets, and steel bolts.

B. Push-on-Joint, Ductile-Iron Pipe: AWWA C151, with push-on-joint bell and plain spigot end unless grooved or flanged ends are indicated.

1. Push-on-Joint, Ductile-Iron Fittings: AWWA C110, ductile- or gray-iron standard pattern or AWWA C153, ductile-iron compact pattern.
2. Gaskets: AWWA C111, rubber.

C. Grooved-Joint, Ductile-Iron Pipe: AWWA C151, with cut, rounded-grooved ends.

1. Grooved-End, Ductile-Iron Pipe Appurtenances:
   a. Grooved-End, Ductile-Iron Fittings: ASTM A47/A47M, malleable-iron castings or ASTM A536, ductile-iron castings with dimensions matching pipe.
   b. Grooved-End, Ductile-Iron-Piping Couplings: AWWA C606, for ductile-iron-pipe dimensions. Include ferrous housing sections, gasket suitable for water, and bolts and nuts.

D. Flanges: ASME 16.1, Class 125, cast iron.

2.3 PVC PIPE AND FITTINGS

A. PVC, Schedule 40 Pipe: ASTM D 1785.

1. PVC, Schedule 40 Socket Fittings: ASTM D 2466.

B. PVC, Schedule 80 Pipe: ASTM D 1785.

1. PVC, Schedule 80 Socket Fittings: ASTM D 2467.
2. PVC, Schedule 80 Threaded Fittings: ASTM D 2464.

C. PVC, AWWA Pipe: AWWA C900, Class 200, with bell end with gasket, and with spigot end.

1. Comply with UL 1285 for fire-service mains if indicated.
2. PVC Fabricated Fittings: AWWA C900, Class 200, with bell-and-spigot or double-bell ends. Include elastomeric gasket in each bell.
3. PVC Molded Fittings: AWWA C907, Class 150, with bell-and-spigot or double-bell ends. Include elastomeric gasket in each bell.
4. Push-on-Joint, Ductile-Iron Fittings: AWWA C110, ductile- or gray-iron standard pattern or AWWA C153, ductile-iron compact pattern.

    a. Gaskets: AWWA C111, rubber.

5. Mechanical-Joint, Ductile-Iron Fittings: AWWA C110, ductile- or gray-iron standard pattern or AWWA C153, ductile-iron compact pattern.

    a. Glands, Gaskets, and Bolts: AWWA C111, ductile- or gray-iron glands, rubber gaskets, and steel bolts.

2.4 SPECIAL PIPE FITTINGS

A. Ductile-Iron Rigid Expansion Joints:
1. Description: Three-piece, ductile-iron assembly consisting of telescoping sleeve with gaskets and restrained-type, ductile-iron, bell-and-spigot end sections complying with AWWA C110 or AWWA C153. Select and assemble components for expansion indicated. Include AWWA C111, ductile-iron glands, rubber gaskets, and steel bolts.

    a. Pressure Rating: 250 psig minimum.

B. Ductile-Iron Flexible Expansion Joints:
1. Description: Compound, ductile-iron fitting with combination of flanged and mechanical-joint ends complying with AWWA C110 or AWWA C153. Include two gasketed ball-joint sections and one or more gasketed sleeve sections. Assemble components for offset and expansion indicated. Include AWWA C111, ductile-iron glands, rubber gaskets, and steel bolts.

    a. Pressure Rating: 250 psig minimum.

2.5 JOINING MATERIALS

A. Refer to Section 330500 "Common Work Results for Utilities" for commonly used joining materials.

B. Brazing Filler Metals: AWS A5.8, BCuP Series.

C. Bonding Adhesive for Fiberglass Piping: As recommended by fiberglass piping manufacturer.

D. Plastic Pipe-Flange Gasket, Bolts, and Nuts: Type and material recommended by piping system manufacturer, unless otherwise indicated.

2.6 PIPING SPECIALTIES

A. Transition Fittings: Manufactured fitting or coupling same size as, with pressure rating at least equal to and ends compatible with, piping to be joined.

B. Tubular-Sleeve Pipe Couplings:

1. Manufacturers: Subject to compliance with requirements, provide products by one of the following:

    a. Dresser, Inc.
    b. Hays Fluid Controls.
    c. Smith-Blair, Inc.
    d. Viking Johnson.

2. Description: Metal, bolted, sleeve-type, reducing or transition coupling, with center sleeve, gaskets, end rings, and bolt fasteners and with ends of same sizes as piping to be joined.

    a. Standard: AWWA C219.
    b. Gasket Material: Natural or synthetic rubber.
    c. Pressure Rating: 200 psig minimum.
    d. Metal Component Finish: Corrosion-resistant coating or material.

C. Split-Sleeve Pipe Couplings:

1. Manufacturers: Subject to compliance with requirements, provide products by the following:

    a. Victaulic Company.

2. Description: Metal, bolted, split-sleeve-type, reducing or transition coupling with sealing pad and closure plates, O-ring gaskets, and bolt fasteners.

    a. Standard: AWWA C219.
    b. Sleeve Dimensions: Of thickness and width required to provide pressure rating.
    c. Gasket Material: O-rings made of EPDM rubber, unless otherwise indicated.
    d. Pressure Rating: 200 psig minimum.
    e. Metal Component Finish: Corrosion-resistant coating or material.

D. Flexible Connectors:

1. Nonferrous-Metal Piping: Bronze hose covered with bronze wire braid; with copper-tube, pressure-type, solder-joint ends or bronze flanged ends brazed to hose.
2. Ferrous-Metal Piping: Stainless-steel hose covered with stainless-steel wire braid; with ASME B1.20.1, threaded steel pipe nipples or ASME B16.5, steel pipe flanges welded to hose.

E. Dielectric Fittings:

1. General Requirements: Assembly of copper alloy and ferrous materials with separating nonconductive insulating material. Include end connections compatible with pipes to be joined.
2. Dielectric Unions:

    a. Description:

        1) Standard: ASSE 1079.
        2) Pressure Rating: 250 psig.
        3) End Connections: Solder-joint copper alloy and threaded ferrous.

3. Dielectric Flanges:

    a. Description:

        1) Standard: ASSE 1079.
        2) Factory-fabricated, bolted, companion-flange assembly.
        3) Pressure Rating: 175 psig.
        4) End Connections: Solder-joint copper alloy and threaded ferrous; threaded solder-joint copper alloy and threaded ferrous.

4. Dielectric-Flange Insulating Kits:

    a. Description:

        1) Nonconducting materials for field assembly of companion flanges.
        2) Pressure Rating: 150 psig.
        3) Gasket: Neoprene or phenolic.
        4) Bolt Sleeves: Phenolic or polyethylene.
        5) Washers: Phenolic with steel backing washers.

5. Dielectric Nipples:

    a. Description:

        1) Standard: IAPMO PS 66
        2) Electroplated steel nipple. complying with ASTM F 1545.
        3) Pressure Rating: 300 psig at 225 deg F.
        4) End Connections: Male threaded or grooved.
        5) Lining: Inert and noncorrosive, propylene.

2.7 CORROSION-PROTECTION PIPING ENCASEMENT

A. Encasement for Underground Metal Piping:

1. Standards: ASTM A 674 or AWWA C105.
2. Form: Sheet or tube.
3. Material: High-density, crosslaminated PE film of 0.004-inch minimum thickness.

2.8 GATE VALVES

A. AWWA, Cast-Iron Gate Valves:

1. Manufacturers: Subject to compliance with requirements, provide products by one of the following:

   a. Crane; Crane Energy Flow Solutions.
   b. NIBCO INC.
   c. Tyler Pipe; a subsidiary of McWane Inc.
   d. U.S. Pipe and Foundry Company.
   e. Zurn Industries, LLC.

2. Nonrising-Stem, Resilient-Seated Gate Valves:

   a. Description: Gray- or ductile-iron body and bonnet; with bronze or gray- or ductile-iron gate, resilient seats, bronze stem, and stem nut.

      1) Standard: AWWA C509.
      2) Minimum Pressure Rating: 200 psig.
      3) End Connections: Mechanical joint.
      4) Interior Coating: Complying with AWWA C550.

B. Bronze Gate Valves:

1. Manufacturers: Subject to compliance with requirements, provide products by one of the following:

   a. Crane; Crane Energy Flow Solutions.
   b. Hammond Valve.
   c. Milwaukee Valve Company.
   d. NIBCO INC.
   e. Red-White Valve Corporation.
   f. Stockham; Crane Energy Flow Solutions.
   g. Zurn Industries, LLC.

2. Nonrising-Stem Gate Valves:

   a. Description: Class 125, Type 1, bronze with solid wedge, threaded ends, and malleable-iron handwheel.

      1) Standard: MSS SP-80.

2.9 GATE VALVE ACCESSORIES AND SPECIALTIES

A. Tapping-Sleeve Assemblies:
   1. Description: Sleeve and valve compatible with drilling machine.
      a. Standard: MSS SP-60.
      b. Tapping Sleeve: Cast- or ductile-iron or stainless-steel, two-piece bolted sleeve with flanged outlet for new branch connection. Include sleeve matching size and type of pipe material being tapped and with recessed flange for branch valve.
      c. Valve: AWWA, cast-iron, nonrising-stem, gate valve with one raised face flange mating tapping-sleeve flange.

B. Valve Boxes: Comply with AWWA M44 for cast-iron valve boxes. Include top section, adjustable extension of length required for depth of burial of valve, plug with lettering "WATER," and bottom section with base that fits over valve and with a barrel approximately 5 inches in diameter.
   1. Operating Wrenches: Steel, tee-handle with one pointed end, stem of length to operate deepest buried valve, and socket matching valve operating nut.

PART 3 - EXECUTION

3.1 EARTHWORK

A. Refer to Section 312000 "Earth Moving" for excavating, trenching, and backfilling.

3.2 PIPING APPLICATIONS

A. General: Use pipe, fittings, and joining methods for piping systems according to the following applications.

B. Transition couplings and special fittings with pressure ratings at least equal to piping pressure rating may be used, unless otherwise indicated.

C. Do not use flanges or unions for underground piping.

D. Flanges, unions, grooved-end-pipe couplings, and special fittings may be used, instead of joints indicated, on aboveground piping and piping in vaults.

E. Underground water-service piping NPS 3/4 to NPS 3 shall be the following:
   1. PVC, Schedule 80 pipe; PVC, Schedule 80 socket fittings; and solvent-cemented joints.

F. Underground water-service piping NPS 4 to NPS 8 shall be the following:
   1. PVC, Schedule 80 pipe; PVC, Schedule 80 socket fittings; and solvent-cemented joints.

G. Underground Fire-Service-Main Piping **NPS 4 to NPS 12** shall be the following:
   1. Ductile-iron, **push-on-joint pipe; ductile-iron, push-on-joint fittings; and gasketed, mechanical-joint pipe; ductile-iron, mechanical-joint fittings; and mechanical** joints.

3.3 VALVE APPLICATIONS

A. General Application: Use mechanical-joint-end valves for NPS 3 and larger underground installation. Use threaded- or flanged-end valves for installation in vaults. Use UL/FMG, nonrising-stem gate valves for installation with indicator posts. Use corporation valves and curb valves with ends compatible with piping, for NPS 2 and smaller installation.

B. Drawings indicate valve types to be used. Where specific valve types are not indicated, the following requirements apply:

1. Underground Valves, NPS 3 and Larger: AWWA, cast-iron, nonrising-stem, resilient-seated gate valves with valve box.
2. Use the following for valves in vaults and aboveground:

    a. Gate Valves, NPS 2 and Smaller: Bronze, nonrising stem.
    b. Check Valves: AWWA C508, swing type.

3. Pressure-Reducing Valves: Use for water-service piping in vaults and aboveground to control water pressure.
4. Relief Valves: Use for water-service piping in vaults and aboveground.

    a. Air-Release Valves: To release accumulated air.
    b. Air/Vacuum Valves: To release or admit large volume of air during filling of piping.
    c. Combination Air Valves: To release or admit air.

3.4 PIPING SYSTEMS - COMMON REQUIREMENTS

A. See Section 330500 "Common Work Results for Utilities" for piping-system common requirements.

3.5 PIPING INSTALLATION

A. Water-Main Connection: Arrange with utility company for tap of size and in location indicated in water main.

B. Make connections larger than NPS 2 with tapping machine according to the following:

1. Install tapping sleeve and tapping valve according to MSS SP-60.
2. Install tapping sleeve on pipe to be tapped. Position flanged outlet for gate valve.
3. Use tapping machine compatible with valve and tapping sleeve; cut hole in main. Remove tapping machine and connect water-service piping.
4. Install gate valve onto tapping sleeve. Comply with MSS SP-60. Install valve with stem pointing up and with valve box.

C. Make connections NPS 2 and smaller with drilling machine according to the following:

1. Install service-saddle assemblies and corporation valves in size, quantity, and arrangement required by utility company standards.

2. Install service-saddle assemblies on water-service pipe to be tapped. Position outlets for corporation valves.
3. Use drilling machine compatible with service-saddle assemblies and corporation valves. Drill hole in main. Remove drilling machine and connect water-service piping.
4. Install corporation valves into service-saddle assemblies.
5. Install manifold for multiple taps in water main.
6. Install curb valve in water-service piping with head pointing up and with service box.

D. Install PVC, AWWA pipe according to ASTM F 645 and AWWA M23.

E. Bury piping with depth of cover over top at least 30 inches, with top at least 12 inches below level of maximum frost penetration, and according to the following:

1. Under Driveways: With at least 36 inches cover over top.

F. Install piping by tunneling or jacking, or combination of both, under streets and other obstructions that cannot be disturbed.

G. Extend water-service piping and connect to water-supply source and building-water-piping systems at outside face of building wall in locations and pipe sizes indicated.

1. Terminate water-service piping at building wall until building-water-piping systems are installed. Terminate piping with caps, plugs, or flanges as required for piping material. Make connections to building-water-piping systems when those systems are installed.

H. Sleeves are specified in Section 220517 "Sleeves and Sleeve Seals for Plumbing Piping."

I. Mechanical sleeve seals are specified in Section 220517 "Sleeves and Sleeve Seals for Plumbing Piping."

J. See Section 221116 "Domestic Water Piping" for potable-water piping inside the building.

3.6 JOINT CONSTRUCTION

A. See Section 330500 "Common Work Results for Utilities" for basic piping joint construction.

B. Make pipe joints according to the following:

1. Copper-Tubing, Pressure-Sealed Joints: Use proprietary crimping tool and procedure recommended by copper, pressure-seal-fitting manufacturer.
2. PVC Piping Gasketed Joints: Use joining materials according to AWWA C900. Construct joints with elastomeric seals and lubricant according to ASTM D 2774 or ASTM D 3139 and pipe manufacturer's written instructions.
3. Ductile-Iron Piping, Gasketed Joints for Fire-Service-Main Piping: UL 194.
4. Install dielectric fittings in piping at connections of dissimilar metal piping and tubing.

3.7 ANCHORAGE INSTALLATION

A. Anchorage, General: Install water-distribution piping with restrained joints. Anchorages and restrained-joint types that may be used include the following:

1. Concrete thrust blocks.

B. Install anchorages for tees, plugs and caps, bends, crosses, valves, and hydrant branches. Include anchorages for the following piping systems:

1. Gasketed-Joint, Ductile-Iron, Water-Service Piping: According to AWWA C600.
2. Gasketed-Joint, PVC Water-Service Piping: According to AWWA M23.
3. Fire-Service-Main Piping: According to NFPA 24.

C. Apply full coat of asphalt or other acceptable corrosion-resistant material to surfaces of installed ferrous anchorage devices.

3.8 VALVE INSTALLATION

A. AWWA Gate Valves: Comply with AWWA C600 and AWWA M44. Install each underground valve with stem pointing up and with valve box.

B. AWWA Valves Other Than Gate Valves: Comply with AWWA C600 and AWWA M44.

C. MSS Valves: Install as component of connected piping system.

D. Pressure-Reducing Valves: Install in vault or aboveground between shutoff valves. Install full-size valved bypass.

E. Relief Valves: Comply with AWWA C512. Install aboveground with shutoff valve on inlet.

3.9 VACUUM BREAKER ASSEMBLY INSTALLATION

A. Install pressure vacuum breaker assemblies of type, size, and capacity indicated. Include valves and test cocks. Install according to requirements of plumbing and health department and authorities having jurisdiction.

B. Do not install pressure vacuum breaker assemblies in vault or other space subject to flooding.

3.10 WATER METER BOX INSTALLATION

A. Install water meter boxes in paved areas flush with surface.

B. Install water meter boxes in grass or earth areas with top 2 inches above surface.

3.11 CONCRETE VAULT INSTALLATION

A. Install precast concrete vaults according to ASTM C 891.

3.12 CONNECTIONS

A. See Section 330500 "Common Work Results for Utilities" for piping connections to valves and equipment.

B. Connect water-distribution piping to existing water main. Use tapping sleeve and tapping valve.

C. Connect water-distribution and fire-suppression piping as indicated.

D. Ground equipment according to Section 260526 "Grounding and Bonding for Electrical Systems."

E. Connect wiring according to Section 260519 "Low-Voltage Electrical Power Conductors and Cables."

3.13 FIELD QUALITY CONTROL

A. Piping Tests: Conduct piping tests before joints are covered and after concrete thrust blocks have hardened sufficiently. Fill pipeline 24 hours before testing and apply test pressure to stabilize system. Use only potable water.

B. Hydrostatic Tests: Test at not less than one-and-one-half times working pressure for two hours.

1. Increase pressure in 50-psig increments and inspect each joint between increments. Hold at test pressure for 1 hour; decrease to 0 psig. Slowly increase again to test pressure and hold for 1 more hour. Maximum allowable leakage is 2 quarts per hour per 100 joints. Remake leaking joints with new materials and repeat test until leakage is within allowed limits.

C. Prepare reports of testing activities.

3.14 IDENTIFICATION

A. Install continuous underground detectable warning tape during backfilling of trench for underground water-distribution piping. Locate below finished grade, directly over piping. Underground warning tapes are specified in Section 312000 "Earth Moving."

B. Permanently attach equipment nameplate or marker indicating plastic water-service piping, on main electrical meter panel. See Section 330500 "Common Work Results for Utilities" for identifying devices.

3.15 CLEANING

A. Clean and disinfect water-distribution piping as follows:

1. Purge new water-distribution piping systems and parts of existing systems that have been altered, extended, or repaired before use.
2. Use purging and disinfecting procedure prescribed by authorities having jurisdiction or, if method is not prescribed by authorities having jurisdiction, use procedure described in

NFPA 24 for flushing of piping. Flush piping system with clean, potable water until dirty water does not appear at points of outlet.

3. Use purging and disinfecting procedure prescribed by authorities having jurisdiction or, if method is not prescribed by authorities having jurisdiction, use procedure described in AWWA C651 or do as follows:

    a. Fill system or part of system with water/chlorine solution containing at least 50 ppm of chlorine; isolate and allow to stand for 24 hours.
    b. After standing time, flush system with clean, potable water until no chlorine remains in water coming from system.
    c. Submit water samples in sterile bottles to authorities having jurisdiction. Repeat procedure if biological examination shows evidence of contamination.

B. Prepare reports of purging and disinfecting activities.

END OF SECTION 221113

SECTION 221116 - DOMESTIC WATER PIPING

PART 1 - GENERAL

1.1 RELATED DOCUMENTS

A. Drawings and general provisions of the Contract, including General and Supplementary Conditions and Division 01 Specification Sections, apply to this Section.

1.2 SUMMARY

A. Section Includes:

1. Under-building-slab and aboveground domestic water pipes, tubes, and fittings inside buildings.
2. Encasement for piping.

B. Related Requirements:

1. Section 221113 "Facility Water Distribution Piping" for water-service piping and water meters outside the building from source to the point where water-service piping enters the building.

1.3 ACTION SUBMITTALS

A. Product Data: For transition fittings and dielectric fittings.

1.4 INFORMATIONAL SUBMITTALS

A. System purging and disinfecting activities report.

B. Field quality-control reports.

1.5 FIELD CONDITIONS

A. Interruption of Existing Water Service: Do not interrupt water service to facilities occupied by Owner or others unless permitted under the following conditions and then only after arranging to provide temporary water service according to requirements indicated:

1. Notify Engineer no fewer than two days in advance of proposed interruption of water service.
2. Do not interrupt water service without Architect's written permission.

SECTION 221116 - DOMESTIC WATER PIPING

PART 2 - PRODUCTS

2.1 PIPING MATERIALS

A. Comply with requirements in "Piping Schedule" Article for applications of pipe, tube, fitting materials, and joining methods for specific services, service locations, and pipe sizes.

B. Potable-water piping and components shall comply with NSF 14 and NSF 61 Annex G. Plastic piping components shall be marked with "NSF-pw."

2.2 COPPER TUBE AND FITTINGS

A. Hard Copper Tube: ASTM B 88, Type K water tube, drawn temper.

B. Cast-Copper, Solder-Joint Fittings: ASME B16.18, pressure fittings.

C. Wrought-Copper, Solder-Joint Fittings: ASME B16.22, wrought-copper pressure fittings.

D. Bronze Flanges: ASME B16.24, Class 150, with solder-joint ends.

E. Copper Unions:

1. MSS SP-123.
2. Cast-copper-alloy, hexagonal-stock body.
3. Ball-and-socket, metal-to-metal seating surfaces.
4. Solder-joint or threaded ends.

F. Copper Pressure-Seal-Joint Fittings:
1. Fittings for NPS 2 and Smaller: Wrought-copper fitting with EPDM-rubber, O-ring seal in each end.
2. Fittings for NPS 2-1/2 to NPS 4: Cast-bronze or wrought-copper fitting with EPDM-rubber, O-ring seal in each end.

G. Copper Push-on-Joint Fittings:
1. Description:

a. Cast-copper fitting complying with ASME B16.18 or wrought-copper fitting complying with ASME B 16.22.
b. Stainless-steel teeth and EPDM-rubber, O-ring seal in each end instead of solder-joint ends.

H. Copper-Tube, Extruded-Tee Connections:
1. Description: Tee formed in copper tube according to ASTM F 2014.

2.3 PIPING JOINING MATERIALS

A. Pipe-Flange Gasket Materials:

1. AWWA C110/A21.10, rubber, flat face, 1/8 inch thick or ASME B16.21, nonmetallic and asbestos free unless otherwise indicated.
2. Full-face or ring type unless otherwise indicated.

B. Metal, Pipe-Flange Bolts and Nuts: ASME B18.2.1, carbon steel unless otherwise indicated.

C. Solder Filler Metals: ASTM B 32, lead-free alloys.

D. Flux: ASTM B 813, water flushable.

E. Brazing Filler Metals: AWS A5.8/A5.8M, BCuP Series, copper-phosphorus alloys for general-duty brazing unless otherwise indicated.

2.4 ENCASEMENT FOR PIPING

A. Standard: ASTM A 674 or AWWA C105/A21.5.

B. Form: tube.

2.5 TRANSITION FITTINGS

A. General Requirements:

1. Same size as pipes to be joined.
2. Pressure rating at least equal to pipes to be joined.
3. End connections compatible with pipes to be joined.

B. Fitting-Type Transition Couplings: Manufactured piping coupling or specified piping system fitting.

C. Sleeve-Type Transition Coupling: AWWA C219.

1. Manufacturers:

a. Cascade Waterworks Manufacturing.
b. Dresser, Inc.; Dresser Piping Specialties.
c. Ford Meter Box Company, Inc. (The).
d. JCM Industries.
e. Romac Industries, Inc.
f. Smith-Blair, Inc; a Sensus company.
g. Viking Johnson; c/o Mueller Co.

D. Plastic-to-Metal Transition Unions:

1. Manufacturers:

a. Charlotte Pipe and Foundry Company.
b. Harvel Plastics, Inc.
c. Spears Manufacturing Company.

2. Description:

a. PVC four-part union.
b. Brass threaded end.
c. Solvent-cement-joint plastic end.
d. Rubber O-ring.
e. Union nut.

2.6 DIELECTRIC FITTINGS

A. General Requirements: Assembly of copper alloy and ferrous materials with separating nonconductive insulating material. Include end connections compatible with pipes to be joined.

B. Dielectric Unions:

1. Manufacturers:

a. Capitol Manufacturing Company.
b. Central Plastics Company.
c. EPCO Sales, Inc.
d. Hart Industries International, Inc.
e. Watts Regulator Co.; a division of Watts Water Technologies, Inc.
f. Zurn Plumbing Products Group; Wilkins Water Control Products.

2. Standard: ASSE 1079.
3. Pressure Rating: 150 psig.
4. End Connections: Solder-joint copper alloy and threaded ferrous.

C. Dielectric Flanges:

1. Manufacturers:

a. Capitol Manufacturing Company.
b. Central Plastics Company.
c. EPCO Sales, Inc.
d. Watts Regulator Co.; a division of Watts Water Technologies, Inc.

2. Standard: ASSE 1079.
3. Factory-fabricated, bolted, companion-flange assembly.
4. Pressure Rating: 150 psig.
5. End Connections: Solder-joint copper alloy and threaded ferrous; threaded solder-joint copper alloy and threaded ferrous.

D. Dielectric-Flange Insulating Kits:

1. Manufacturers:

a. Advance Products & Systems, Inc.
b. Calpico, Inc.
c. Central Plastics Company.
d. Pipeline Seal and Insulator, Inc.

2. Nonconducting materials for field assembly of companion flanges.
3. Pressure Rating: 150 psig.
4. Gasket: Neoprene or phenolic.

5. Bolt Sleeves: Phenolic or polyethylene.
6. Washers: Phenolic with steel backing washers.

E. Dielectric Nipples:

1. Manufacturers:

a. Perfection Corporation; a subsidiary of American Meter Company.
b. Precision Plumbing Products, Inc.
c. Victaulic Company.

2. Standard: IAPMO PS 66.
3. Electroplated steel nipple complying with ASTM F 1545.
4. Pressure Rating and Temperature: 300 psig at 225 deg F.
5. End Connections: Male threaded or grooved.
6. Lining: Inert and noncorrosive, propylene.

2.7 FLEXIBLE CONNECTORS

A. Manufacturers:

1. Flex-Hose Co., Inc.
2. Flex Pression, Ltd.
3. Flex-Weld, Inc.
4. Hyspan Precision Products, Inc.
5. Metraflex, Inc.
6. Universal Metal Hose; a Hyspan company

B. Stainless-Steel-Hose Flexible Connectors: Corrugated-stainless-steel tubing with stainless-steel wire-braid covering and ends welded to inner tubing.

1. Working-Pressure Rating: Minimum **200 psig**
2. End Connections NPS 2 and Smaller: Threaded steel-pipe nipple.
3. End Connections NPS 2-1/2 and Larger: Flanged steel nipple.

PART 3 - EXECUTION

3.1 EARTHWORK

A. Comply with requirements in Section 312000 "Earth Moving" for excavating, trenching, and backfilling.

3.2 PIPING INSTALLATION

A. Drawing plans, schematics, and diagrams indicate general location and arrangement of domestic water piping. Indicated locations and arrangements are used to size pipe and calculate friction loss, expansion, and other design considerations. Install piping as indicated unless deviations to layout are approved on coordination drawings.

B. Install copper tubing under building slab according to CDA's "Copper Tube Handbook."

C. Install ductile-iron piping under building slab with restrained joints according to AWWA C600 and AWWA M41.

D. Install underground copper tube in PE encasement according to ASTM A 674 or AWWA C105/A21.5.

E. Install shutoff valve, hose-end drain valve, strainer, pressure gage, and test tee with valve inside the building at each domestic water-service entrance. Comply with requirements for pressure gages in Section 220519 "Meters and Gages for Plumbing Piping" and with requirements for drain valves and strainers in Section 221119 "Domestic Water Piping Specialties."

F. Install shutoff valve immediately upstream of each dielectric fitting.

G. Install water-pressure-reducing valves downstream from shutoff valves. Comply with requirements for pressure-reducing valves in Section 221119 "Domestic Water Piping Specialties."

H. Install domestic water piping level with 0.25 percent slope downward toward drain and plumb.

I. Rough-in domestic water piping for water-meter installation according to utility company's requirements.

J. Install piping concealed from view and protected from physical contact by building occupants unless otherwise indicated and except in equipment rooms and service areas.

K. Install piping indicated to be exposed and piping in equipment rooms and service areas at right angles or parallel to building walls. Diagonal runs are prohibited unless specifically indicated otherwise.

L. Install piping above accessible ceilings to allow sufficient space for ceiling panel removal, and coordinate with other services occupying that space.

M. Install piping to permit valve servicing.

N. Install nipples, unions, special fittings, and valves with pressure ratings the same as or higher than the system pressure rating used in applications below unless otherwise indicated.

O. Install piping free of sags and bends.

P. Install fittings for changes in direction and branch connections.

Q. Install PEX piping with loop at each change of direction of more than 90 degrees.

R. Install unions in copper tubing at final connection to each piece of equipment, machine, and specialty.

S. Install pressure gages on suction and discharge piping for each plumbing pump and packaged booster pump.

T. Install thermostats in hot-water circulation piping.

U. Install thermometers on outlet piping from each water heater. Comply with requirements for thermometers in Section 220519 "Meters and Gages for Plumbing Piping."

V. Install sleeves for piping penetrations of walls, ceilings, and floors. Comply with requirements for sleeves specified in Section 220517 "Sleeves and Sleeve Seals for Plumbing Piping."

W. Install sleeve seals for piping penetrations of concrete walls and slabs. Comply with requirements for sleeve seals specified in Section 220517 "Sleeves and Sleeve Seals for Plumbing Piping."

X. Install escutcheons for piping penetrations of walls, ceilings, and floors. Comply with requirements for escutcheons specified in Section 220518 "Escutcheons for Plumbing Piping."

3.3 JOINT CONSTRUCTION

A. Ream ends of pipes and tubes and remove burrs. Bevel plain ends of steel pipe.

B. Remove scale, slag, dirt, and debris from inside and outside of pipes, tubes, and fittings before assembly.

C. Threaded Joints: Thread pipe with tapered pipe threads according to ASME B1.20.1. Cut threads full and clean using sharp dies. Ream threaded pipe ends to remove burrs and restore full ID. Join pipe fittings and valves as follows:

1. Apply appropriate tape or thread compound to external pipe threads.
2. Damaged Threads: Do not use pipe or pipe fittings with threads that are corroded or damaged.

D. Brazed Joints for Copper Tubing: Comply with CDA's "Copper Tube Handbook," "Brazed Joints" chapter.

E. Pressure-Sealed Joints for Copper Tubing: Join copper tube and pressure-seal fittings with tools recommended by fitting manufacturer.

F. Extruded-Tee Connections: Form tee in copper tube according to ASTM F 2014. Use tool designed for copper tube; drill pilot hole, form collar for outlet, dimple tube to form seating stop, and braze branch tube into collar.

G. Joints for Dissimilar-Material Piping: Make joints using adapters compatible with materials of both piping systems.

3.4 VALVE INSTALLATION

A. General-Duty Valves: Comply with requirements in Division 22 Section "General-Duty Valves for Plumbing Piping" for valve installations.

B. Install shutoff valve close to water main on each branch and riser serving plumbing fixtures or equipment, on each water supply to equipment, and on each water supply to plumbing fixtures that do not have supply stops. Use ball or gate valves for piping NPS 2 and smaller. Use butterfly or gate valves for piping NPS 2-1/2 and larger.

C. Install drain valves for equipment at base of each water riser, at low points in horizontal piping, and where required to drain water piping. Drain valves are specified in Division 22 Section "Domestic Water Piping Specialties."

1. Hose-End Drain Valves: At low points in water mains, risers, and branches.
2. Stop-and-Waste Drain Valves: Instead of hose-end drain valves where indicated.

D. Install balancing valve in each hot-water circulation return branch and discharge side of each pump and circulator. Set balancing valves partly open to restrict but not stop flow. Use ball valves for piping NPS 2 and smaller and butterfly valves for piping NPS 2-1/2 and larger. Comply with requirements in Division 22 Section "Domestic Water Piping Specialties" for balancing valves.

E. Install calibrated balancing valves in each hot-water circulation return branch and discharge side of each pump and circulator. Set calibrated balancing valves partly open to restrict but not stop flow. Comply with requirements in Division 22 Section "Domestic Water Piping Specialties" for calibrated balancing valves.

3.5 TRANSITION FITTING INSTALLATION

A. Install transition couplings at joints of dissimilar piping.

B. Transition Fittings in Underground Domestic Water Piping:

1. Fittings for NPS 1-1/2 and Smaller: Fitting-type coupling.
2. Fittings for NPS 2 and Larger: Sleeve-type coupling.

C. Transition Fittings in Aboveground Domestic Water Piping NPS 2 and Smaller: Plastic-to-metal transition fittings or unions.

3.6 DIELECTRIC FITTING INSTALLATION

A. Install dielectric fittings in piping at connections of dissimilar metal piping and tubing.

3.7 FLEXIBLE CONNECTOR INSTALLATION

A. Install flexible connectors in suction and discharge piping connections to each domestic water pump and in suction and discharge manifold connections to each domestic water booster pump.

B. Install bronze-hose flexible connectors in copper domestic water tubing.

C. Install stainless-steel-hose flexible connectors in steel domestic water piping.

3.8 HANGER AND SUPPORT INSTALLATION

A. Comply with requirements for seismic-restraint devices in Section 220548 "Vibration and Seismic Controls for Plumbing Piping and Equipment."

B. Comply with requirements for pipe hanger, support products, and installation in Section 220529 "Hangers and Supports for Plumbing Piping and Equipment."

1. Vertical Piping: MSS Type 8 or 42, clamps.
2. Individual, Straight, Horizontal Piping Runs:

    a. 100 Feet and Less: MSS Type 1, adjustable, steel clevis hangers.
    b. Longer Than 100 Feet: MSS Type 43, adjustable roller hangers.
    c. Longer Than 100 Feet if Indicated: MSS Type 49, spring cushion rolls.

3. Multiple, Straight, Horizontal Piping Runs 100 Feet or Longer: MSS Type 44, pipe rolls. Support pipe rolls on trapeze.
4. Base of Vertical Piping: MSS Type 52, spring hangers.

C. Support vertical piping and tubing at base and at each floor.

D. Rod diameter may be reduced one size for double-rod hangers, to a minimum of 3/8 inch.

E. Install hangers for copper tubing with the following maximum horizontal spacing and minimum rod diameters:

1. NPS 3/4 and Smaller: 60 inches with 3/8-inch rod.
2. NPS 1 and NPS 1-1/4: 72 inches with 3/8-inch rod.
3. NPS 1-1/2 and NPS 2: 96 inches with 3/8-inch rod.
4. NPS 2-1/2: 108 inches with 1/2-inch rod.
5. NPS 3 to NPS 5: 10 feet with 1/2-inch rod.
6. NPS 6: 10 feet with 5/8-inch rod.
7. NPS 8: 10 feet with 3/4-inch rod.

F. Install supports for vertical copper tubing every 10 feet.

G. Support piping and tubing not listed in this article according to MSS SP-69 and manufacturer's written instructions.

3.9 CONNECTIONS

A. Drawings indicate general arrangement of piping, fittings, and specialties.

B. When installing piping adjacent to equipment and machines, allow space for service and maintenance.

C. Connect domestic water piping to exterior water-service piping. Use transition fitting to join dissimilar piping materials.

D. Connect domestic water piping to water-service piping with shutoff valve; extend and connect to the following:

1. Domestic Water Booster Pumps: Cold-water suction and discharge piping.
2. Water Heaters: Cold-water inlet and hot-water outlet piping in sizes indicated, but not smaller than sizes of water heater connections.

3. Plumbing Fixtures: Cold- and hot-water-supply piping in sizes indicated, but not smaller than that required by plumbing code.
4. Equipment: Cold- and hot-water-supply piping as indicated, but not smaller than equipment connections. Provide shutoff valve and union for each connection. Use flanges instead of unions for NPS 2-1/2 and larger.

3.10 IDENTIFICATION

A. Identify system components. Comply with requirements for identification materials and installation in Section 220553 "Identification for Plumbing Piping and Equipment."

B. Label pressure piping with system operating pressure.

3.11 FIELD QUALITY CONTROL

A. Perform the following tests and inspections:

1. Piping Inspections:

   a. Do not enclose, cover, or put piping into operation until it has been inspected and approved by authorities having jurisdiction.
   b. During installation, notify authorities having jurisdiction at least one day before inspection must be made. Perform tests specified below in presence of authorities having jurisdiction:

      1) Roughing-in Inspection: Arrange for inspection of piping before concealing or closing in after roughing in and before setting fixtures.
      2) Final Inspection: Arrange for authorities having jurisdiction to observe tests specified in "Piping Tests" Subparagraph below and to ensure compliance with requirements.

   c. Reinspection: If authorities having jurisdiction find that piping will not pass tests or inspections, make required corrections and arrange for reinspection.
   d. Reports: Prepare inspection reports and have them signed by authorities having jurisdiction.

2. Piping Tests:

   a. Fill domestic water piping. Check components to determine that they are not air bound and that piping is full of water.
   b. Test for leaks and defects in new piping and parts of existing piping that have been altered, extended, or repaired. If testing is performed in segments, submit a separate report for each test, complete with diagram of portion of piping tested.
   c. Leave new, altered, extended, or replaced domestic water piping uncovered and unconcealed until it has been tested and approved. Expose work that was covered or concealed before it was tested.
   d. Cap and subject piping to static water pressure of 50 psig above operating pressure, without exceeding pressure rating of piping system materials. Isolate test source

and allow it to stand for four hours. Leaks and loss in test pressure constitute defects that must be repaired.

e. Repair leaks and defects with new materials, and retest piping or portion thereof until satisfactory results are obtained.

f. Prepare reports for tests and for corrective action required.

B. Domestic water piping will be considered defective if it does not pass tests and inspections.

C. Prepare test and inspection reports.

3.12 ADJUSTING

A. Perform the following adjustments before operation:

1. Close drain valves, hydrants, and hose bibbs.
2. Open shutoff valves to fully open position.
3. Open throttling valves to proper setting.
4. Adjust balancing valves in hot-water-circulation return piping to provide adequate flow.

    a. Manually adjust ball-type balancing valves in hot-water-circulation return piping to provide hot-water flow in each branch.

    b. Adjust calibrated balancing valves to flows indicated.

5. Remove plugs used during testing of piping and for temporary sealing of piping during installation.
6. Remove and clean strainer screens. Close drain valves and replace drain plugs.
7. Remove filter cartridges from housings and verify that cartridges are as specified for application where used and are clean and ready for use.
8. Check plumbing specialties and verify proper settings, adjustments, and operation.

3.13 CLEANING

A. Clean and disinfect domestic water piping as follows:

1. Purge new piping and parts of existing piping that have been altered, extended, or repaired before using.
2. Use purging and disinfecting procedures prescribed by authorities having jurisdiction; if methods are not prescribed, use procedures described in either AWWA C651 or AWWA C652 or follow procedures described below:

    a. Flush piping system with clean, potable water until dirty water does not appear at outlets.

    b. Fill and isolate system according to either of the following:

        1) Fill system or part thereof with water/chlorine solution with at least 50 ppm of chlorine. Isolate with valves and allow to stand for 24 hours.

        2) Fill system or part thereof with water/chlorine solution with at least 200 ppm of chlorine. Isolate and allow to stand for three hours.

c. Flush system with clean, potable water until no chlorine is in water coming from system after the standing time.
d. Repeat procedures if biological examination shows contamination.
e. Submit water samples in sterile bottles to authorities having jurisdiction.

B. Clean non-potable domestic water piping as follows:

1. Purge new piping and parts of existing piping that have been altered, extended, or repaired before using.
2. Use purging procedures prescribed by authorities having jurisdiction or; if methods are not prescribed, follow procedures described below:

a. Flush piping system with clean, potable water until dirty water does not appear at outlets.
b. Submit water samples in sterile bottles to authorities having jurisdiction. Repeat procedures if biological examination shows contamination.

C. Prepare and submit reports of purging and disinfecting activities. Include copies of water-sample approvals from authorities having jurisdiction.

D. Clean interior of domestic water piping system. Remove dirt and debris as work progresses.

3.14 PIPING SCHEDULE

A. Transition and special fittings with pressure ratings at least equal to piping rating may be used in applications below unless otherwise indicated.

B. Flanges and unions may be used for aboveground piping joints unless otherwise indicated.

C. Fitting Option: Extruded-tee connections and brazed joints may be used on aboveground copper tubing.

D. Under-building-slab, domestic water, building-service piping, up to NPS 8 and larger, shall be the following:

1. Soft copper tube, ASTM B 88, Type K; wrought-copper, solder-joint fittings; and brazed joints.

E. Aboveground domestic water piping, NPS 2 and smaller, shall be the following:
1. Hard copper tube, ASTM B 88, Type K; copper, solder-joint fittings; and brazed joints.
2. Hard copper tube, ASTM B 88, Type K; copper pressure-seal-joint fittings; and pressure-sealed joints.

F. Aboveground domestic water piping, NPS 2-1/2 to NPS 4, shall be the following:

1. Hard copper tube, ASTM B 88, Type K; copper, solder-joint fittings; and brazed joints.
2. Hard copper tube, ASTM B 88, Type K; copper pressure-seal-joint fittings; and pressure-sealed joints.
3. Hard copper tube, ASTM B 88, Type K; grooved-joint, copper-tube appurtenances; and grooved joints.

G. Aboveground, combined domestic water-service and fire-service-main piping, NPS 6 to NPS 12, shall be the following:

1. Plain-end, ductile-iron pipe; grooved-joint, ductile-iron-pipe appurtenances; and grooved joints.

3.15 VALVE SCHEDULE

A. Drawings indicate valve types to be used. Where specific valve types are not indicated, the following requirements apply:

1. Shutoff Duty: Use ball or gate valves for piping NPS 2 and smaller. Use butterfly, ball, or gate valves with flanged ends for piping NPS 2-1/2 and larger.
2. Throttling Duty: Use ball or globe valves for piping NPS 2 and smaller. Use butterfly or ball valves with flanged ends for piping NPS 2-1/2 and larger.
3. Hot-Water Circulation Piping, Balancing Duty: Calibrated balancing valves.
4. Drain Duty: Hose-end drain valves.

B. Use check valves to maintain correct direction of domestic water flow to and from equipment.

C. Iron grooved-end valves may be used with grooved-end piping.

END OF SECTION 221116

SECTION 221119 - DOMESTIC WATER PIPING SPECIALTIES

PART 1 - GENERAL

1.1 RELATED DOCUMENTS

A. Drawings and general provisions of the Contract, including General and Supplementary Conditions and Division 01 Specification Sections, apply to this Section.

1.2 SUMMARY

A. Section Includes:
   1. Backflow preventers.
   2. Wall hydrants.
   3. Flexible connectors.

B. Related Requirements:

   1. Section 220519 "Meters and Gages for Plumbing Piping" for thermometers, pressure gages, and flow meters in domestic water piping.
   2. Section 221116 "Domestic Water Piping" for water meters.
   3. Section 223200 "Domestic Water Filtration Equipment" for water filters in domestic water piping.
   4. Section 224300 "Medical Plumbing Fixtures" for thermostatic mixing valves for sitz baths, thermostatic mixing-valve assemblies for hydrotherapy equipment, and outlet boxes for dialysis equipment.
   5. Section 224500 "Emergency Plumbing Fixtures" for water tempering equipment.
   6. Section 224713 "Drinking Fountains" for water filters for water coolers.
   7. Section 224716 "Pressure Water Coolers" for water filters for water coolers.
   8. Section 224723 "Remote Water Coolers" for water filters for water coolers.

1.3 ACTION SUBMITTALS

A. Product Data: For each type of product.

B. Shop Drawings: For domestic water piping specialties.

   1. Include diagrams for power, signal, and control wiring.

1.4 INFORMATIONAL SUBMITTALS

A. Field quality-control reports.

1.5 CLOSEOUT SUBMITTALS

A. Operation and Maintenance Data: For domestic water piping specialties to include in emergency, operation, and maintenance manuals.

SECTION 221119 - DOMESTIC WATER PIPING SPECIALTIES

PART 2 - PRODUCTS

2.1 GENERAL REQUIREMENTS FOR PIPING SPECIALTIES

A. Potable-water piping and components shall comply with NSF 61 Annex G **[and NSF 14].[Mark "NSF-pw" on plastic piping components.]**

2.2 PERFORMANCE REQUIREMENTS

A. Minimum Working Pressure for Domestic Water Piping Specialties: **[125 psig (860 kPa)]** unless otherwise indicated.

2.3 BACKFLOW PREVENTERS

A. Reduced-Pressure-Principle Backflow Preventers:

B. Manufacturers:
1. Zurn
2. Wilkins
3. Or Approved Equal.

C. Description:

1. Standard: ASSE 1013.
2. Operation: Continuous-pressure applications.
3. Pressure Loss: **12 psig**
4. Size: see drawings.
5. Body: Bronze for NPS 2 and smalle
6. End Connections: Threaded for NPS 2 and smaller.
7. Configuration: Designed for **[horizontal, straight-through]** flow.
8. Accessories:

    a. Valves NPS 2 and Smaller: Ball type with threaded ends on inlet and outlet.
    b. Valves NPS 2-1/2 and Larger: Outside-screw and yoke-gate type with flanged ends on inlet and outlet.
    c. Air-Gap Fitting: ASME A112.1.2, matching backflow-preventer connection.

2.4 WALL HYDRANTS

1. Manufacturers:
    a. Zurn
    b. Woodford
    c. Or Approved Equal

2. Description: See schedule.

2.5 FLEXIBLE CONNECTORS

A. Stainless-Steel-Hose Flexible Connectors: Corrugated-stainless-steel tubing with stainless-steel wire-braid covering and ends welded to inner tubing.

1. Working-Pressure Rating: Minimum **200 psig**.
2. End Connections NPS 2 and Smaller: Threaded steel-pipe nipple.
3. End Connections NPS 2-1/2 and Larger: Flanged steel nipple.

PART 3 - EXECUTION

3.1 INSTALLATION

A. Install backflow preventers in each water supply to mechanical equipment and systems and to other equipment and water systems that may be sources of contamination. Comply with authorities having jurisdiction.

1. Locate backflow preventers in same room as connected equipment or system.
2. Install drain for backflow preventers with atmospheric-vent drain connection with air-gap fitting, fixed air-gap fitting, or equivalent positive pipe separation of at least two pipe diameters in drain piping and pipe-to-floor drain. Locate air-gap device attached to or under backflow preventer. Simple air breaks are unacceptable for this application.
3. Do not install bypass piping around backflow preventers.

B. Install outlet boxes recessed in wall or surface mounted on wall. Install 2-by-4-inch fire-retardant-treated-wood blocking, wall reinforcement between studs. Comply with requirements for fire-retardant-treated-wood blocking in Section 061000 "Rough Carpentry."

C. Install water-hammer arresters in water piping according to PDI-WH 201.

D. Install supply-type, trap-seal primer valves with outlet piping pitched down toward drain trap a minimum of 1 percent, and connect to floor-drain body, trap, or inlet fitting. Adjust valve for proper flow.

3.2 CONNECTIONS

A. Comply with requirements for ground equipment in Section 260526 "Grounding and Bonding for Electrical Systems."

B. Fire-retardant-treated-wood blocking is specified in Section 260519 "Low-Voltage Electrical Power Conductors and Cables" for electrical connections.

3.3 LABELING AND IDENTIFYING

A. Equipment Nameplates and Signs: Install engraved plastic-laminate equipment nameplate or sign on or near each of the following:
1. Reduced-pressure-principle backflow preventers.
2. Outlet boxes.

3. Supply-type, trap-seal primer valves.

B. Distinguish among multiple units, inform operator of operational requirements, indicate safety and emergency precautions, and warn of hazards and improper operations, in addition to identifying unit. Nameplates and signs are specified in Section 220553 "Identification for Plumbing Piping and Equipment."

3.4 FIELD QUALITY CONTROL

A. Perform the following tests and inspections:

1. Test each [**reduced-pressure-principle backflow preventer**] [**double-check, backflow-prevention assembly**] [**and**] [**double-check, detector-assembly backflow preventer**] according to authorities having jurisdiction and the device's reference standard.

B. Domestic water piping specialties will be considered defective if they do not pass tests and inspections.

C. Prepare test and inspection reports.

END OF SECTION 221119

SECTION 221316 - SANITARY WASTE AND VENT PIPING

PART 1 - GENERAL

1.1 RELATED DOCUMENTS

A. Drawings and general provisions of the Contract, including General and Supplementary Conditions and Division 01 Specification Sections, apply to this Section.

1.2 SUMMARY

A. Section Includes:

1. Pipe, tube, and fittings.
2. Specialty pipe fittings.
3. Encasement for underground metal piping.

B. Related Sections:

1. Section 221313 "Facility Sanitary Sewers" for sanitary sewerage piping and structures outside the building.

1.3 PERFORMANCE REQUIREMENTS

A. Components and installation shall be capable of withstanding the following minimum working pressure unless otherwise indicated:

1. Soil, Waste, and Vent Piping: 10-foot head of water.

1.4 ACTION SUBMITTALS

A. Product Data: For each type of product indicated.

B. Shop Drawings: For sovent drainage system. Include plans, elevations, sections, and details.

1.5 INFORMATIONAL SUBMITTALS

A. Field quality-control reports.

1.6 QUALITY ASSURANCE

A. Piping materials shall bear label, stamp, or other markings of specified testing agency.

B. Comply with NSF/ANSI 14, "Plastics Piping Systems Components and Related Materials," for plastic piping components. Include marking with "NSF-dwv" for plastic drain, waste, and vent piping and "NSF-sewer" for plastic sewer piping.

1.7 PROJECT CONDITIONS

A. Interruption of Existing Sanitary Waste Service: Do not interrupt service to facilities occupied by Owner or others unless permitted under the following conditions and then only after arranging to provide temporary service according to requirements indicated:

1. Notify Engineer no fewer than two days in advance of proposed interruption of sanitary waste service.
2. Do not proceed with interruption of sanitary waste service without Architect's written permission.

PART 2 - PRODUCTS

2.1 PIPING MATERIALS

A. Comply with requirements in "Piping Schedule" Article for applications of pipe, tube, fitting materials, and joining methods for specific services, service locations, and pipe sizes.

2.2 PVC PIPE AND FITTINGS

A. Solid-Wall PVC Pipe: ASTM D 2665, drain, waste, and vent.

B. PVC Socket Fittings: ASTM D 2665, made to ASTM D 3311, drain, waste, and vent patterns and to fit Schedule 40 pipe.

C. Adhesive Primer: ASTM F 656.

1. Adhesive primer shall have a VOC content of 550 g/L or less when calculated according to 40 CFR 59, Subpart D (EPA Method 24).
2. Adhesive primer shall comply with the testing and product requirements of the California Department of Health Services' "Standard Practice for the Testing of Volatile Organic Emissions from Various Sources Using Small-Scale Environmental Chambers."

D. Solvent Cement: ASTM D 2564.

1. PVC solvent cement shall have a VOC content of 510 g/L or less when calculated according to 40 CFR 59, Subpart D (EPA Method 24).
2. Solvent cement shall comply with the testing and product requirements of the California Department of Health Services' "Standard Practice for the Testing of Volatile Organic Emissions from Various Sources Using Small-Scale Environmental Chambers."

2.3 SPECIALTY PIPE FITTINGS

A. Transition Couplings:

1. General Requirements: Fitting or device for joining piping with small differences in OD's or of different materials. Include end connections same size as and compatible with pipes to be joined.

2. Fitting-Type Transition Couplings: Manufactured piping coupling or specified piping system fitting.

3. Shielded, Nonpressure Transition Couplings:
   a. Standard: ASTM C 1460.
   b. Description: Elastomeric or rubber sleeve with full-length, corrosion-resistant outer shield and corrosion-resistant-metal tension band and tightening mechanism on each end.

4. Pressure Transition Couplings:
   a. Standard: AWWA C219.
   b. Description: Metal, sleeve-type same size as, with pressure rating at least equal to, and ends compatible with, pipes to be joined.
   c. Center-Sleeve Material: Stainless steel.
   d. Gasket Material: Natural or synthetic rubber.
   e. Metal Component Finish: Corrosion-resistant coating or material.

B. Dielectric Fittings:

1. General Requirements: Assembly of copper alloy and ferrous materials with separating nonconductive insulating material. Include end connections compatible with pipes to be joined.
2. Dielectric Unions:
   a. Description:

      1) Standard: ASSE 1079.
      2) Pressure Rating: 150 psig.
      3) End Connections: Solder-joint copper alloy and threaded ferrous.

3. Dielectric Flanges:
   a. Description:

      1) Standard: ASSE 1079.
      2) Factory-fabricated, bolted, companion-flange assembly.
      3) Pressure Rating: 150 psig.
      4) End Connections: Solder-joint copper alloy and threaded ferrous; threaded solder-joint copper alloy and threaded ferrous.

4. Dielectric-Flange Insulating Kits:
   a. Description:

      1) Nonconducting materials for field assembly of companion flanges.
      2) Pressure Rating: 150 psig.
      3) Gasket: Neoprene or phenolic.
      4) Bolt Sleeves: Phenolic or polyethylene.
      5) Washers: Phenolic with steel backing washers.

5. Dielectric Nipples:
   a. Description:

      1) Standard: IAPMO PS 66

2) Electroplated steel nipple.
3) Pressure Rating: 300 psig at 225 deg F.
4) End Connections: Male threaded or grooved.
5) Lining: Inert and noncorrosive, propylene.

2.4 ENCASEMENT FOR UNDERGROUND METAL PIPING

A. Standard: ASTM A 674 or AWWA C105/A 21.5.

B. Material: high-density, cross-laminated polyethylene film of 0.004-inch minimum thickness.

PART 3 - EXECUTION

3.1 EARTH MOVING

A. Comply with requirements for excavating, trenching, and backfilling specified in Section 312000 "Earth Moving."

3.2 PIPING INSTALLATION

A. Drawing plans, schematics, and diagrams indicate general location and arrangement of piping systems. Indicated locations and arrangements were used to size pipe and calculate friction loss, expansion, pump sizing, and other design considerations. Install piping as indicated unless deviations to layout are approved on coordination drawings.

B. Install piping in concealed locations unless otherwise indicated and except in equipment rooms and service areas.

C. Install piping indicated to be exposed and piping in equipment rooms and service areas at right angles or parallel to building walls. Diagonal runs are prohibited unless specifically indicated otherwise.

D. Install piping above accessible ceilings to allow sufficient space for ceiling panel removal.

E. Install piping to permit valve servicing.

F. Install piping at indicated slopes.

G. Install piping free of sags and bends.

H. Install fittings for changes in direction and branch connections.

I. Install piping to allow application of insulation.

J. Make changes in direction for soil and waste drainage and vent piping using appropriate branches, bends, and long-sweep bends. Sanitary tees and short-sweep 1/4 bends may be used on vertical stacks if change in direction of flow is from horizontal to vertical. Use long-turn, double Y-branch and 1/8-bend fittings if two fixtures are installed back to back or side by side

with common drain pipe. Straight tees, elbows, and crosses may be used on vent lines. Do not change direction of flow more than 90 degrees. Use proper size of standard increasers and reducers if pipes of different sizes are connected. Reducing size of drainage piping in direction of flow is prohibited.

K. Lay buried building drainage piping beginning at low point of each system. Install true to grades and alignment indicated, with unbroken continuity of invert. Place hub ends of piping upstream. Install required gaskets according to manufacturer's written instructions for use of lubricants, cements, and other installation requirements. Maintain swab in piping and pull past each joint as completed.

L. Install soil and waste drainage and vent piping at the following minimum slopes unless otherwise indicated:

1. Building Sanitary Drain: 2 percent downward in direction of flow for piping NPS 3 and smaller; 1 percent downward in direction of flow for piping NPS 4 and larger.
2. Horizontal Sanitary Drainage Piping: 2 percent downward in direction of flow.
3. Vent Piping: 1 percent down toward vertical fixture vent or toward vent stack.

M. Install cast-iron soil piping according to CISPI's "Cast Iron Soil Pipe and Fittings Handbook," Chapter IV, "Installation of Cast Iron Soil Pipe and Fittings."

1. Install encasement on underground piping according to ASTM A 674 or AWWA C105/A 21.5.

N. Install aboveground PVC piping according to ASTM D 2665.

O. Install underground PVC piping according to ASTM D 2321.

P. Install engineered soil and waste drainage and vent piping systems as follows:

1. Combination Waste and Vent: Comply with standards of authorities having jurisdiction.
2. Sovent Drainage System: Comply with ASSE 1043 and sovent fitting manufacturer's written installation instructions.
3. Reduced-Size Venting: Comply with standards of authorities having jurisdiction.

Q. Plumbing Specialties:
1. Install cleanouts at grade and extend to where building sanitary drains connect to building sanitary sewers in sanitary drainage gravity-flow piping. Install cleanout fitting with closure plug inside the building in sanitary drainage force-main piping. Comply with requirements for cleanouts specified in Section 221319 "Sanitary Waste Piping Specialties."
2. Install drains in sanitary drainage gravity-flow piping. Comply with requirements for drains specified in Section 221319 "Sanitary Waste Piping Specialties."

R. Do not enclose, cover, or put piping into operation until it is inspected and approved by authorities having jurisdiction.

S. Install sleeves for piping penetrations of walls, ceilings, and floors. Comply with requirements for sleeves specified in Section 220517 "Sleeves and Sleeve Seals for Plumbing Piping."

T. Install sleeve seals for piping penetrations of concrete walls and slabs. Comply with requirements for sleeve seals specified in Section 220517 "Sleeves and Sleeve Seals for Plumbing Piping."

U. Install escutcheons for piping penetrations of walls, ceilings, and floors. Comply with requirements for escutcheons specified in Section 220518 "Escutcheons for Plumbing Piping."

3.3 JOINT CONSTRUCTION

A. Plastic, Nonpressure-Piping, Solvent-Cement Joints: Clean and dry joining surfaces. Join pipe and fittings according to the following:

1. Comply with ASTM F 402 for safe-handling practice of cleaners, primers, and solvent cements.
2. PVC Piping: Join according to ASTM D 2855 and ASTM D 2665 Appendixes.

3.4 SPECIALTY PIPE FITTING INSTALLATION

A. Transition Couplings:

1. Install transition couplings at joints of piping with small differences in OD's.
2. In Drainage Piping: Shielded, nonpressure transition couplings.
3. In Aboveground Force Main Piping: Fitting-type transition couplings.
4. In Underground Force Main Piping:

    a. NPS 1-1/2 and Smaller: Fitting-type transition couplings.
    b. NPS 2 and Larger: Pressure transition couplings.

B. Dielectric Fittings:

1. Install dielectric fittings in piping at connections of dissimilar metal piping and tubing.
2. Dielectric Fittings for NPS 2 and Smaller: Use dielectric unions.
3. Dielectric Fittings for NPS 2-1/2 to NPS 4: Use dielectric flange kits.
4. Dielectric Fittings for NPS 5 and Larger: Use dielectric flange kits.

3.5 HANGER AND SUPPORT INSTALLATION

A. Comply with requirements for pipe hanger and support devices and installation specified in Section 220529 "Hangers and Supports for Plumbing Piping and Equipment."
1. Vertical Piping: MSS Type 8 or Type 42, clamps.
2. Install individual, straight, horizontal piping runs:

    a. 100 Feet and Less: MSS Type 1, adjustable, steel clevis hangers.
    b. Longer Than 100 Feet: MSS Type 43, adjustable roller hangers.
    c. Longer Than 100 Feet if Indicated: MSS Type 49, spring cushion rolls.

3. Multiple, Straight, Horizontal Piping Runs 100 Feet or Longer: MSS Type 44, pipe rolls. Support pipe rolls on trapeze.
4. Base of Vertical Piping: MSS Type 52, spring hangers.

B. Support horizontal piping and tubing within 12 inches of each fitting, valve, and coupling.

C. Support vertical piping and tubing at base and at each floor.

D. Rod diameter may be reduced one size for double-rod hangers, with 3/8-inch minimum rods.

E. Install hangers for cast-iron soil piping with the following maximum horizontal spacing and minimum rod diameters:

1. NPS 1-1/2 and NPS 2: 60 inches with 3/8-inch rod.
2. NPS 3: 60 inches with 1/2-inch rod.
3. NPS 4 and NPS 5: 60 inches with 5/8-inch rod.
4. NPS 6 and NPS 8: 60 inches with 3/4-inch rod.
5. NPS 10 and NPS 12: 60 inches with 7/8-inch rod.
6. Spacing for 10-foot lengths may be increased to 10 feet. Spacing for fittings is limited to 60 inches.

F. Install supports for vertical cast-iron soil piping every 15 feet.

G. Install hangers for PVC piping with the following maximum horizontal spacing and minimum rod diameters:

1. NPS 1-1/2 and NPS 2: 48 inches with 3/8-inch rod.
2. NPS 3: 48 inches with 1/2-inch rod.
3. NPS 4 and NPS 5: 48 inches with 5/8-inch rod.
4. NPS 6 and NPS 8: 48 inches with 3/4-inch rod.
5. NPS 10 and NPS 12: 48 inches with 7/8-inch rod.

H. Install supports for vertical PVC piping every 48 inches.

I. Support piping and tubing not listed above according to MSS SP-69 and manufacturer's written instructions.

3.6 CONNECTIONS

A. Drawings indicate general arrangement of piping, fittings, and specialties.

B. Connect soil and waste piping to exterior sanitary sewerage piping. Use transition fitting to join dissimilar piping materials.

C. Connect drainage and vent piping to the following:

1. Plumbing Fixtures: Connect drainage piping in sizes indicated, but not smaller than required by plumbing code.
2. Plumbing Fixtures and Equipment: Connect atmospheric vent piping in sizes indicated, but not smaller than required by authorities having jurisdiction.
3. Plumbing Specialties: Connect drainage and vent piping in sizes indicated, but not smaller than required by plumbing code.
4. Install test tees (wall cleanouts) in conductors near floor and floor cleanouts with cover flush with floor.

5. Comply with requirements for cleanouts and drains specified in Section 221319 "Sanitary Waste Piping Specialties."
6. Equipment: Connect drainage piping as indicated. Provide shutoff valve if indicated and union for each connection. Use flanges instead of unions for connections NPS 2-1/2 and larger.

D. Where installing piping adjacent to equipment, allow space for service and maintenance of equipment.

E. Make connections according to the following unless otherwise indicated:

1. Install unions, in piping NPS 2 and smaller, adjacent to each valve and at final connection to each piece of equipment.
2. Install flanges, in piping NPS 2-1/2 and larger, adjacent to flanged valves and at final connection to each piece of equipment.

3.7 IDENTIFICATION

A. Identify exposed sanitary waste and vent piping. Comply with requirements for identification specified in Section 220553 "Identification for Plumbing Piping and Equipment."

3.8 FIELD QUALITY CONTROL

A. During installation, notify authorities having jurisdiction at least 24 hours before inspection must be made. Perform tests specified below in presence of authorities having jurisdiction.

1. Roughing-in Inspection: Arrange for inspection of piping before concealing or closing-in after roughing-in and before setting fixtures.
2. Final Inspection: Arrange for final inspection by authorities having jurisdiction to observe tests specified below and to ensure compliance with requirements.

B. Reinspection: If authorities having jurisdiction find that piping will not pass test or inspection, make required corrections and arrange for reinspection.

C. Reports: Prepare inspection reports and have them signed by authorities having jurisdiction.

D. Test sanitary drainage and vent piping according to procedures of authorities having jurisdiction or, in absence of published procedures, as follows:

1. Test for leaks and defects in new piping and parts of existing piping that have been altered, extended, or repaired. If testing is performed in segments, submit separate report for each test, complete with diagram of portion of piping tested.
2. Leave uncovered and unconcealed new, altered, extended, or replaced drainage and vent piping until it has been tested and approved. Expose work that was covered or concealed before it was tested.
3. Roughing-in Plumbing Test Procedure: Test drainage and vent piping except outside leaders on completion of roughing-in. Close openings in piping system and fill with water to point of overflow, but not less than 10-foot head of water. From 15 minutes before

inspection starts to completion of inspection, water level must not drop. Inspect joints for leaks.

4. Finished Plumbing Test Procedure: After plumbing fixtures have been set and traps filled with water, test connections and prove they are gastight and watertight. Plug vent-stack openings on roof and building drains where they leave building. Introduce air into piping system equal to pressure of 1-inch wg. Use U-tube or manometer inserted in trap of water closet to measure this pressure. Air pressure must remain constant without introducing additional air throughout period of inspection. Inspect plumbing fixture connections for gas and water leaks.
5. Repair leaks and defects with new materials and retest piping, or portion thereof, until satisfactory results are obtained.
6. Prepare reports for tests and required corrective action.

3.9 CLEANING AND PROTECTION

A. Clean interior of piping. Remove dirt and debris as work progresses.

B. Protect drains during remainder of construction period to avoid clogging with dirt and debris and to prevent damage from traffic and construction work.

C. Place plugs in ends of uncompleted piping at end of day and when work stops.

D. Exposed PVC Piping: Protect plumbing vents exposed to sunlight with two coats of water-based latex paint.

3.10 PIPING SCHEDULE

A. Flanges and unions may be used on aboveground pressure piping unless otherwise indicated.

A. Underground and above ground (unless noted otherwise), soil, waste, and vent piping shall be the following:
   1. Solid-wall PVC pipe, PVC socket fittings, and solvent-cemented joints.
   2. Dissimilar Pipe-Material Couplings: Shielded, nonpressure pipe couplings for joining dissimilar pipe materials with small difference in OD.

END OF SECTION 221316

SECTION 221319 - SANITARY WASTE PIPING SPECIALTIES

PART 1 - GENERAL

1.1 RELATED DOCUMENTS

A. Drawings and general provisions of the Contract, including General and Supplementary Conditions and Division 01 Specification Sections, apply to this Section.

1.2 SUMMARY

A. Section Includes:
   1. Cleanouts.
   2. Floor drains.
   3. Through-penetration firestop assemblies.
   4. Miscellaneous sanitary drainage piping specialties.
   5. Flashing materials.

1.3 DEFINITIONS

A. ABS: Acrylonitrile-butadiene-styrene plastic.

B. FOG: Fats, oils, and greases.

C. FRP: Fiberglass-reinforced plastic.

D. HDPE: High-density polyethylene plastic.

E. PE: Polyethylene plastic.

F. PP: Polypropylene plastic.

G. PVC: Polyvinyl chloride plastic.

1.4 ACTION SUBMITTALS

A. Product Data: For each type of product indicated. Include rated capacities, operating characteristics, and accessories.

1.5 CLOSEOUT SUBMITTALS

A. Operation and Maintenance Data: For drainage piping specialties to include in emergency, operation, and maintenance manuals.

1.6 QUALITY ASSURANCE

A. Drainage piping specialties shall bear label, stamp, or other markings of specified testing agency.

B. Electrical Components, Devices, and Accessories: Listed and labeled as defined in NFPA 70, Article 100, by a testing agency acceptable to authorities having jurisdiction, and marked for intended use.

C. Comply with NSF 14, "Plastics Piping Components and Related Materials," for plastic sanitary piping specialty components.

PART 2 - PRODUCTS

2.1 CLEANOUTS

A. Metal Floor Cleanouts:
1. ASME A112.36.2M, Cast-Iron Cleanouts: see detail on plans.
2. Standard: ASME A112.36.2M for [**cast-iron soil pipe with cast-iron ferrule**] [**threaded, adjustable housing**] cleanout.
3. Size: Same as connected branch.
4. Type: [**Threaded, adjustable housing**].
5. Body or Ferrule: [**Cast iron**].
6. Clamping Device: [**Required**].
7. Outlet Connection: [**Threaded**].
8. Closure: [**Cast-iron plug**].
9. Adjustable Housing Material: [**Cast iron**] with [**threads**].
10. Frame and Cover Material and Finish: [**Nickel-bronze, copper alloy**]
11. Frame and Cover Shape: [**Round**].
12. Top Loading Classification: [**Medium**] Duty.

B. Plastic Wall Cleanouts:
1. See detail on plans.
2. Size: Same as connected branch.
3. Body: PVC.
4. Closure Plug: Stainless Steel.
5. Riser: Drainage pipe fitting and riser to cleanout of same material as drainage piping.

2.2 FLOOR DRAINS

A. Manufacturers:
1. Zurn.
2. Mifab.
3. Josam.
4. Wade.
5. Watts.

B. Description: See schedules.

2.3 THROUGH-PENETRATION FIRESTOP ASSEMBLIES

A. Through-Penetration Firestop Assemblies:
1. Standard: UL 1479 assembly of sleeve and stack fitting with firestopping plug.
2. Size: Same as connected soil, waste, or vent stack.
3. Sleeve: Molded PVC plastic, of length to match slab thickness and with integral nailing flange on one end for installation in cast-in-place concrete slabs.
4. Stack Fitting: ASTM A 48/A 48M, gray-iron, hubless-pattern, wye branch with neoprene O-ring at base and gray-iron plug in thermal-release harness. Include PVC protective cap for plug.
5. Special Coating: Corrosion resistant on interior of fittings.

2.4 MISCELLANEOUS SANITARY DRAINAGE PIPING SPECIALTIES

A. Floor-Drain, Trap-Seal Primer Fittings:
1. Description: Cast iron, with threaded inlet and threaded or spigot outlet, and trap-seal primer valve connection.
2. Size: Same as floor drain outlet with NPS 1/2 (DN 15) side inlet.

B. Air-Gap Fittings:
1. Standard: ASME A112.1.2, for fitting designed to ensure fixed, positive air gap between installed inlet and outlet piping.
2. Body: Bronze or cast iron.
3. Inlet: Opening in top of body.
4. Outlet: Larger than inlet.
5. Size: Same as connected waste piping and with inlet large enough for associated indirect waste piping.

C. Sleeve Flashing Device:
1. Description: Manufactured, cast-iron fitting, with clamping device, that forms sleeve for pipe floor penetrations of floor membrane. Include galvanized-steel pipe extension in top of fitting that will extend **1 inch** above finished floor and galvanized-steel pipe extension in bottom of fitting that will extend through floor slab.
2. Size: As required for close fit to riser or stack piping.

D. Stack Flashing Fittings:
1. Description: Counterflashing-type, cast-iron fitting, with bottom recess for terminating roof membrane, and with threaded or hub top for extending vent pipe.
2. Size: Same as connected stack vent or vent stack.

2.5 FLASHING MATERIALS

A. Copper Sheet: ASTM B 152/B 152M, of the following minimum weights and thicknesses, unless otherwise indicated:
1. General Applications: 12 oz./sq. ft. (3.7 kg/sq. m or 0.41-mm thickness).
2. Vent Pipe Flashing: 8 oz./sq. ft. (2.5 kg/sq. m or 0.27-mm thickness).

B. Zinc-Coated Steel Sheet: ASTM A 653/A 653M, with 0.20 percent copper content and 0.04-inch minimum thickness, unless otherwise indicated. Include G90 hot-dip galvanized, mill-phosphatized finish for painting if indicated.

C. Elastic Membrane Sheet: ASTM D 4068, flexible, chlorinated polyethylene, 40-mil minimum thickness.

D. Fasteners: Metal compatible with material and substrate being fastened.

E. Metal Accessories: Sheet metal strips, clamps, anchoring devices, and similar accessory units required for installation; matching or compatible with material being installed.

F. Solder: ASTM B 32, lead-free alloy.

G. Bituminous Coating: SSPC-Paint 12, solvent-type, bituminous mastic.

PART 3 - EXECUTION

3.1 INSTALLATION

A. Install cleanouts in aboveground piping and building drain piping according to the following, unless otherwise indicated:
1. Size same as drainage piping up to NPS 4 (DN 100). Use NPS 4 (DN 100) for larger drainage piping unless larger cleanout is indicated.
2. Locate at each change in direction of piping greater than 45 degrees.
3. Locate at minimum intervals of 50 feet for piping NPS 4 and smaller and 100 feet for larger piping.
4. Locate at base of each vertical soil and waste stack.

B. For floor cleanouts for piping below floors, install cleanout deck plates with top flush with finished floor.

C. For cleanouts located in concealed piping, install cleanout wall access covers, of types indicated, with frame and cover flush with finished wall.

D. Install floor drains at low points of surface areas to be drained. Set grates of drains flush with finished floor, unless otherwise indicated.
1. Position floor drains for easy access and maintenance.
2. Set floor drains below elevation of surrounding finished floor to allow floor drainage. Set with grates depressed according to the following drainage area radii:
   a. Coordinate with Structural Drawings prior installation.
   b. Radius, 30 Inches (750 mm) or Less: Equivalent to 1 percent slope, but not less than 1/4-inch (6.35-mm) total depression.
   c. Radius, 30 to 60 Inches (750 to 1500 mm): Equivalent to 1 percent slope.
3. Install floor-drain flashing collar or flange so no leakage occurs between drain and adjoining flooring. Maintain integrity of waterproof membranes where penetrated.
4. Install individual traps for floor drains connected to sanitary building drain, unless otherwise indicated.

E. Install roof flashing assemblies on sanitary stack vents and vent stacks that extend through roof.

F. Install flashing fittings on sanitary stack vents and vent stacks that extend through roof.

G. Install through-penetration firestop assemblies in plastic conductors and stacks at floor penetrations.

H. Assemble open drain fittings and install with top of hub 1 inch above floor.

I. Install deep-seal traps on floor drains and other waste outlets, if indicated.

J. Install floor-drain, trap-seal primer fittings on inlet to floor drains that require trap-seal primer connection.
   1. Exception: Fitting may be omitted if trap has trap-seal primer connection.
   2. Size: Same as floor drain inlet.

K. Install air-gap fittings on draining-type backflow preventers and on indirect-waste piping discharge into sanitary drainage system.

L. Install sleeve flashing device with each riser and stack passing through floors with waterproof membrane.

M. Install vent caps on each vent pipe passing through roof.

N. Install oil interceptors, including trapping, venting, and flow-control fitting, according to authorities having jurisdiction and with clear space for servicing.

O. Install wood-blocking reinforcement for wall-mounting-type specialties.

P. Install traps on plumbing specialty drain outlets. Omit traps on indirect wastes unless trap is indicated.

3.2 CONNECTIONS

A. Comply with requirements in Section 221316 "Sanitary Waste and Vent Piping" for piping installation requirements. Drawings indicate general arrangement of piping, fittings, and specialties.

B. Install piping adjacent to equipment to allow service and maintenance.

C. Oil Interceptors: Connect inlet, outlet, vent, and gravity drawoff piping to unit; flow-control fitting and vent to unit inlet piping; and gravity drawoff and suction piping to oil storage tank.

D. Ground equipment according to Section 260526 "Grounding and Bonding for Electrical Systems."

E. Connect wiring according to Section 260519 "Low-Voltage Electrical Power Conductors and Cables."

3.3 FLASHING INSTALLATION

A. Fabricate flashing from single piece unless large pans, sumps, or other drainage shapes are required. Join flashing according to the following if required:
   1. Copper Sheets: Solder joints of copper sheets.

B. Install sheet flashing on pipes, sleeves, and specialties passing through or embedded in floors and roofs with waterproof membrane.
   1. Pipe Flashing: Sleeve type, matching pipe size, with minimum length of 10 inches, and skirt or flange extending at least 8 inches around pipe.
   2. Sleeve Flashing: Flat sheet, with skirt or flange extending at least 8 inches around sleeve.
   3. Embedded Specialty Flashing: Flat sheet, with skirt or flange extending at least 8 inches around specialty.

C. Set flashing on floors and roofs in solid coating of bituminous cement.

D. Secure flashing into sleeve and specialty clamping ring or device.

E. Install flashing for piping passing through roofs with counterflashing or commercially made flashing fittings, according to Section 076200 "Sheet Metal Flashing and Trim."

F. Extend flashing up vent pipe passing through roofs and turn down into pipe, or secure flashing into cast-iron sleeve having calking recess.

G. Fabricate and install flashing and pans, sumps, and other drainage shapes.

3.4 LABELING AND IDENTIFYING

A. Distinguish among multiple units, inform operator of operational requirements, indicate safety and emergency precautions, and warn of hazards and improper operations, in addition to identifying unit. Nameplates and signs are specified in Section 220553 "Identification for Plumbing Piping and Equipment."

3.5 FIELD QUALITY CONTROL

A. Tests and Inspections:
   1. Leak Test: After installation, charge system and test for leaks. Repair leaks and retest until no leaks exist. Test and adjust controls and safeties. Replace damaged and malfunctioning controls and equipment.

3.6 PROTECTION

A. Protect drains during remainder of construction period to avoid clogging with dirt or debris and to prevent damage from traffic or construction work.

B. Place plugs in ends of uncompleted piping at end of each day or when work stops.

END OF SECTION 221319

SECTION 230513 - COMMON MOTOR REQUIREMENTS FOR HVAC EQUIPMENT

PART 1 - GENERAL

1.1 RELATED DOCUMENTS

A. Drawings and general provisions of the Contract, including General and Supplementary Conditions and Division 01 Specification Sections, apply to this Section.

1.2 SUMMARY

A. Section includes general requirements for single-phase and polyphase, general-purpose, horizontal, small and medium, squirrel-cage induction motors for use on ac power systems up to 600 V and installed at equipment manufacturer's factory or shipped separately by equipment manufacturer for field installation.

1.3 COORDINATION

A. Coordinate features of motors, installed units, and accessory devices to be compatible with the following:

1. Motor controllers.
2. Torque, speed, and horsepower requirements of the load.
3. Ratings and characteristics of supply circuit and required control sequence.
4. Ambient and environmental conditions of installation location.

PART 2 - PRODUCTS

2.1 GENERAL MOTOR REQUIREMENTS

A. Comply with requirements in this Section except when stricter requirements are specified in HVAC equipment schedules or Sections.

B. Comply with NEMA MG 1 unless otherwise indicated.

C. Comply with IEEE 841 for severe-duty motors.

2.2 MOTOR CHARACTERISTICS

A. Duty: Continuous duty at ambient temperature of 40 deg C and at altitude of 3300 feet above sea level.

B. Capacity and Torque Characteristics: Sufficient to start, accelerate, and operate connected loads at designated speeds, at installed altitude and environment, with indicated operating sequence, and without exceeding nameplate ratings or considering service factor.

2.3 POLYPHASE MOTORS

A. Description: NEMA MG 1, Design B, medium induction motor.

B. Efficiency: Energy efficient, as defined in NEMA MG 1.

C. Service Factor: 1.15.

D. Multispeed Motors: Variable torque. Unless otherwise noted, windings shall be:

1. For motors with 2:1 speed ratio, consequent pole, single winding.
2. For motors with other than 2:1 speed ratio, separate winding for each speed.

E. Multispeed Motors: Separate winding for each speed.

F. Rotor: Random-wound, squirrel cage.

G. Bearings: Regreasable, shielded, antifriction ball bearings suitable for radial and thrust loading.

H. Temperature Rise: Match insulation rating.

I. Insulation: Class F.

J. Code Letter Designation:

1. Motors 15 HP and Larger: NEMA starting Code F or Code G.
2. Motors Smaller than 15 HP: Manufacturer's standard starting characteristic.

K. Enclosure Material: Cast iron for motor frame sizes 324T and larger; rolled steel for motor frame sizes smaller than 324T.

2.4 POLYPHASE MOTORS WITH ADDITIONAL REQUIREMENTS

A. Motors Used with Reduced-Voltage and Multispeed Controllers: Match wiring connection requirements for controller with required motor leads. Provide terminals in motor terminal box, suited to control method.

B. Motors Used with Variable Frequency Controllers: Ratings, characteristics, and features coordinated with and approved by controller manufacturer.

1. Windings: Copper magnet wire with moisture-resistant insulation varnish, designed and tested to resist transient spikes, high frequencies, and short time rise pulses produced by pulse-width modulated inverters.
2. Energy- and Premium-Efficient Motors: Class B temperature rise; Class F insulation.
3. Inverter-Duty Motors: Class F temperature rise; Class H insulation.
4. Thermal Protection: Comply with NEMA MG 1 requirements for thermally protected motors.

C. Severe-Duty Motors: Comply with IEEE 841, with 1.15 minimum service factor.

2.5 SINGLE-PHASE MOTORS

A. Motors larger than 1/20 HP shall be one of the following, to suit starting torque and requirements of specific motor application:

1. Permanent-split capacitor.
2. Split phase.
3. Capacitor start, inductor run.
4. Capacitor start, capacitor run.

B. Multispeed Motors: Variable-torque, permanent-split-capacitor type.

C. Bearings: Prelubricated, antifriction ball bearings or sleeve bearings suitable for radial and thrust loading.

D. Motors 1/20 HP and Smaller: Shaded-pole type.

E. Thermal Protection: Internal protection to automatically open power supply circuit to motor when winding temperature exceeds a safe value calibrated to temperature rating of motor insulation. Thermal-protection device shall automatically reset when motor temperature returns to normal range.

PART 3 - EXECUTION (Not Applicable)

END OF SECTION 230513

SECTION 230516 - EXPANSION FITTINGS AND LOOPS FOR HVAC PIPING

PART 1 - GENERAL

1.1 RELATED DOCUMENTS

A. Drawings and general provisions of the Contract, including General and Supplementary Conditions and Division 01 Specification Sections, apply to this Section.

1.2 SUMMARY

A. Section Includes:

1. Flexible, ball-joint packed expansion joints.
2. Rubber union connector packless expansion joints.
3. Flexible-hose packless expansion joints.
4. Metal-bellows packless expansion joints.
5. Rubber packless expansion joints.
6. Grooved-joint expansion joints.

1.3 ACTION SUBMITTALS

A. Product Data: For each type of product.

1.4 INFORMATIONAL SUBMITTALS

A. Welding certificates.

1.5 CLOSEOUT SUBMITTALS

A. Maintenance Data: For expansion joints to include in maintenance manuals.

1.6 QUALITY ASSURANCE

A. Welding Qualifications: Qualify procedures and personnel according to AWS D1.1/D1.1M, "Structural Welding Code - Steel."

B. Pipe and Pressure-Vessel Welding Qualifications: Qualify procedures and operators according to ASME Boiler and Pressure Vessel Code.

SECTION 230516 - EXPANSION FITTINGS AND LOOPS FOR HVAC PIPING

PART 2 - PRODUCTS

2.1 PERFORMANCE REQUIREMENTS

A. Compatibility: Products shall be suitable for piping service fluids, materials, working pressures, and temperatures.

B. Capability: Products to absorb 200 percent of maximum axial movement between anchors.

2.2 PACKLESS EXPANSION JOINTS

A. Flexible-Hose Packless Expansion Joints:

1. Manufacturers: Subject to compliance with requirements, provide products by one of the following:

   a. Flex-Hose Co., Inc.
   b. Mason Industries, Inc.
   c. Metraflex Company (The).

2. Description: Manufactured assembly with inlet and outlet elbow fittings and two flexible-metal-hose legs joined by long-radius, 180-degree return bend or center section of flexible hose.

3. Flexible Hose: Corrugated-metal inner hoses and braided outer sheaths.
4. Expansion Joints for Copper Tubing NPS 2 and Smaller: Copper-alloy fittings with threaded end connections.
   a. Bronze hoses and double-braid bronze sheaths with 700 psig at 70 deg F and 500 psig at 450 deg F ratings.

5. Expansion Joints for Copper Tubing NPS 2-1/2 to NPS 4: Copper-alloy fittings with threaded end connections.
   a. Stainless-steel hoses and double-braid, stainless-steel sheaths with 420 psig at 70 deg F and 315 psig at 450 deg F ratings.

6. Expansion Joints for Steel Piping NPS 2 and Smaller: Carbon-steel fittings with threaded end connections.
   a. Stainless-steel hoses and double-braid, stainless-steel sheaths with 700 psig at 70 deg F and 515 psig at 600 deg F ratings.

7. Expansion Joints for Steel Piping NPS 2-1/2 to NPS 6: Carbon-steel fittings with flanged end connections.
   a. Stainless-steel hoses and double-braid, stainless-steel sheaths with 275 psig at 70 deg F and 200 psig at 600 deg F ratings.

8. Expansion Joints for Steel Piping NPS 8 to NPS 12: Carbon-steel fittings with flanged end connections.
   a. Stainless-steel hoses and double-braid, stainless-steel sheaths with 165 psig at 70 deg F and 120 psig at 600 deg F ratings.

B. Metal-Bellows Packless Expansion Joints:

1. Manufacturers: Subject to compliance with requirements, provide products by one of the following:

   a. Flex-Hose Co., Inc.
   b. Hyspan Precision Products, Inc.
   c. Mason Industries, Inc.
   d. Metraflex Company (The).

2. Standards: ASTM F 1120 and EJMA's "Standards of the Expansion Joint Manufacturers Association, Inc."

3. Type: Circular, corrugated bellows with external tie rods.
4. Minimum Pressure Rating: 150 psig, unless otherwise indicated.
5. Expansion Joints for Copper Tubing: multi- ply phosphor-bronze bellows, copper pipe ends, and brass shrouds.

   a. End Connections for Copper Tubing NPS 2 and Smaller: threaded.
   b. End Connections for Copper Tubing NPS 2-1/2 to NPS 4: threaded.
   c. End Connections for Copper Tubing NPS 5 and Larger: Flanged.

6. Expansion Joints for Steel Piping: multi- ply stainless-steel bellows, steel pipe ends, and carbon-steel shroud.

   a. End Connections for Steel Pipe NPS 2 and Smaller: Threaded.
   b. End Connections for Steel Pipe NPS 2-1/2 and Larger: Welded.

PART 3 - EXECUTION

3.1 EXPANSION JOINT INSTALLATION

A. Install expansion joints of sizes matching sizes of piping in which they are installed.

B. Install metal-bellows expansion joints according to EJMA's "Standards of the Expansion Joint Manufacturers Association, Inc."

C. Install rubber packless expansion joints according to FSA-PSJ-703.

D. Install grooved-joint expansion joints to grooved-end steel piping.

END OF SECTION 230516

SECTION 230517 - SLEEVES AND SLEEVE SEALS FOR HVAC PIPING

PART 1 - GENERAL

1.1 RELATED DOCUMENTS

A. Drawings and general provisions of the Contract, including General and Supplementary Conditions and Division 01 Specification Sections, apply to this Section.

1.2 SUMMARY

A. Section Includes:

1. Sleeves.
2. Stack-sleeve fittings.
3. Sleeve-seal systems.
4. Sleeve-seal fittings.
5. Grout.

1.3 ACTION SUBMITTALS

A. Product Data: For each type of product indicated.

PART 2 - PRODUCTS

2.1 SLEEVES

A. Cast-Iron Wall Pipes: Cast or fabricated of cast or ductile iron and equivalent to ductile-iron pressure pipe, with plain ends and integral waterstop unless otherwise indicated.

B. Galvanized-Steel Wall Pipes: ASTM A 53/A 53M, Schedule 40, with plain ends and welded steel collar; zinc coated.

C. Galvanized-Steel-Pipe Sleeves: ASTM A 53/A 53M, Type E, Grade B, Schedule 40, zinc coated, with plain ends.

D. Galvanized-Steel-Sheet Sleeves: 0.0239-inch minimum thickness; round tube closed with welded longitudinal joint.

2.2 STACK-SLEEVE FITTINGS

A. Manufacturers:

1. Smith, Jay R. Mfg. Co.
2. Zurn Specification Drainage Operation; Zurn Plumbing Products Group.

B. Description: Manufactured, cast-iron sleeve with integral clamping flange. Include clamping ring, bolts, and nuts for membrane flashing.

1. Underdeck Clamp: Clamping ring with setscrews.

2.3 SLEEVE-SEAL SYSTEMS

A. Manufacturers:

1. Advance Products & Systems, Inc.
2. CALPICO, Inc.
3. Metraflex Company (The).
4. Pipeline Seal and Insulator, Inc.
5. Proco Products, Inc.

B. Description: Modular sealing-element unit, designed for field assembly, for filling annular space between piping and sleeve.

1. Sealing Elements: EPDM-rubber interlocking links shaped to fit surface of pipe. Include type and number required for pipe material and size of pipe.
2. Pressure Plates: Carbon steel.
3. Connecting Bolts and Nuts: Carbon steel, with corrosion-resistant coating, of length required to secure pressure plates to sealing elements.

2.4 SLEEVE-SEAL FITTINGS

A. Manufacturers:

1. Presealed Systems.

B. Description: Manufactured plastic, sleeve-type, waterstop assembly made for imbedding in concrete slab or wall. Unit has plastic or rubber waterstop collar with center opening to match piping OD.

2.5 GROUT

A. Standard: ASTM C 1107/C 1107M, Grade B, post-hardening and volume-adjusting, dry, hydraulic-cement grout.

B. Characteristics: Nonshrink; recommended for interior and exterior applications.

C. Design Mix: 5000-psi, 28-day compressive strength.

D. Packaging: Premixed and factory packaged.

PART 3 - EXECUTION

3.1 SLEEVE INSTALLATION

A. Install sleeves for piping passing through penetrations in floors, partitions, roofs, and walls.

B. For sleeves that will have sleeve-seal system installed, select sleeves of size large enough to provide 1-inch annular clear space between piping and concrete slabs and walls.

C. Install sleeves in concrete floors, concrete roof slabs, and concrete walls as new slabs and walls are constructed.
   1. Cut sleeves to length for mounting flush with both surfaces.
      a. Exception: Extend sleeves installed in floors of mechanical equipment areas or other wet areas 2 inches above finished floor level.
   2. Using grout, seal the space outside of sleeves in slabs and walls without sleeve-seal system.

D. Install sleeves for pipes passing through interior partitions.
   1. Cut sleeves to length for mounting flush with both surfaces.
   2. Install sleeves that are large enough to provide 1/4-inch annular clear space between sleeve and pipe or pipe insulation.
   3. Seal annular space between sleeve and piping or piping insulation; use joint sealants appropriate for size, depth, and location of joint. Comply with requirements for sealants specified in Section 079200 "Joint Sealants."

E. Fire-Barrier Penetrations: Maintain indicated fire rating of walls, partitions, ceilings, and floors at pipe penetrations. Seal pipe penetrations with firestop materials. Comply with requirements for firestopping specified in Section 078413 "Penetration Firestopping."

3.2 STACK-SLEEVE-FITTING INSTALLATION

A. Install stack-sleeve fittings in new slabs as slabs are constructed.
   1. Install fittings that are large enough to provide 1/4-inch annular clear space between sleeve and pipe or pipe insulation.
   2. Secure flashing between clamping flanges for pipes penetrating floors with membrane waterproofing. Comply with requirements for flashing specified in Section 076200 "Sheet Metal Flashing and Trim."
   3. Install section of cast-iron soil pipe to extend sleeve to 2 inches above finished floor level.
   4. Extend cast-iron sleeve fittings below floor slab as required to secure clamping ring if ring is specified.
   5. Using grout, seal the space around outside of stack-sleeve fittings.

B. Fire-Barrier Penetrations: Maintain indicated fire rating of floors at pipe penetrations. Seal pipe penetrations with firestop materials. Comply with requirements for firestopping specified in Section 078413 "Penetration Firestopping."

3.3 SLEEVE-SEAL-SYSTEM INSTALLATION

A. Install sleeve-seal systems in sleeves in exterior concrete walls and slabs-on-grade at service piping entries into building.

B. Select type, size, and number of sealing elements required for piping material and size and for sleeve ID or hole size. Position piping in center of sleeve. Center piping in penetration, assemble sleeve-seal system components, and install in annular space between piping and sleeve. Tighten bolts against pressure plates that cause sealing elements to expand and make a watertight seal.

3.4 SLEEVE-SEAL-FITTING INSTALLATION

A. Install sleeve-seal fittings in new walls and slabs as they are constructed.

B. Assemble fitting components of length to be flush with both surfaces of concrete slabs and walls. Position waterstop flange to be centered in concrete slab or wall.

C. Secure nailing flanges to concrete forms.

D. Using grout, seal the space around outside of sleeve-seal fittings.

3.5 SLEEVE AND SLEEVE-SEAL SCHEDULE

A. Use sleeves and sleeve seals for the following piping-penetration applications:
   1. Exterior Concrete Walls above Grade: Cast-iron wall sleeves.
   2. Exterior Concrete Walls below Grade: Cast-iron wall sleeves with sleeve-seal system. Select sleeve size to allow for 1-inch annular clear space between piping and sleeve for installing sleeve-seal system.
   3. Concrete Slabs-on-Grade: Cast-iron wall sleeves with sleeve-seal system. Select sleeve size to allow for 1-inch annular clear space between piping and sleeve for installing sleeve-seal system.
   4. Concrete Slabs above Grade: Galvanized-steel-pipe sleeves.
   5. Interior Partitions: Galvanized-steel-pipe sleeves.

END OF SECTION 230517

SECTION 230518 - ESCUTCHEONS FOR HVAC PIPING

PART 1 - GENERAL

1.1 RELATED DOCUMENTS

A. Drawings and general provisions of the Contract, including General and Supplementary Conditions and Division 01 Specification Sections, apply to this Section.

1.2 SUMMARY

A. Section Includes:

1. Escutcheons.
2. Floor plates.

1.3 ACTION SUBMITTALS

A. Product Data: For each type of product indicated.

PART 2 - PRODUCTS

2.1 ESCUTCHEONS

A. One-Piece, Cast-Brass Type: With polished, chrome-plated and rough-brass finish and setscrew fastener.

B. One-Piece, Deep-Pattern Type: Deep-drawn, box-shaped brass with chrome-plated finish and spring-clip fasteners.

C. One-Piece, Stamped-Steel Type: With chrome-plated finish and spring-clip fasteners.

D. Split-Casting Brass Type: With polished, chrome-plated and rough-brass finish and with concealed hinge and setscrew.

2.2 FLOOR PLATES

A. One-Piece Floor Plates: Cast-iron flange with holes for fasteners.

B. Split-Casting Floor Plates: Cast brass with concealed hinge.

SECTION 230518 - ESCUTCHEONS FOR HVAC PIPING

PART 3 - EXECUTION

3.1 INSTALLATION

A. Install escutcheons for piping penetrations of walls, ceilings, and finished floors.

B. Install escutcheons with ID to closely fit around pipe, tube, and insulation of piping and with OD that completely covers opening.

1. Escutcheons for New Piping:

a. Piping with Fitting or Sleeve Protruding from Wall: One-piece, deep-pattern type.
b. Insulated Piping: One-piece, stamped-steel type.
c. Bare Piping at Wall and Floor Penetrations in Finished Spaces: One-piece, cast-brass type with polished, chrome-plated finish.
d. Bare Piping at Ceiling Penetrations in Finished Spaces: One-piece, cast-brass or split-casting brass type with polished, chrome-plated finish.
e. Bare Piping in Unfinished Service Spaces: One-piece, cast-brass type with rough-brass finish.
f. Bare Piping in Equipment Rooms: One-piece, cast-brass type with rough-brass finish.

2. Escutcheons for Existing Piping:
a. Insulated Piping: Split-plate, stamped-steel type with concealed hinge.
b. Bare Piping at Wall and Floor Penetrations in Finished Spaces: Split-casting brass type with polished, chrome-plated finish.
c. Bare Piping at Wall and Floor Penetrations in Finished Spaces: Split-plate, stamped-steel type with concealed hinge.
d. Bare Piping at Ceiling Penetrations in Finished Spaces: Split-casting brass type with polished, chrome-plated finish.
e. Bare Piping at Ceiling Penetrations in Finished Spaces: Split-plate, stamped-steel type with concealed hinge.
f. Bare Piping in Unfinished Service Spaces: Split-casting brass type with rough-brass finish.
g. Bare Piping in Equipment Rooms: Split-casting brass type with rough-brass finish.

C. Install floor plates for piping penetrations of equipment-room floors.

D. Install floor plates with ID to closely fit around pipe, tube, and insulation of piping and with OD that completely covers opening.
1. New Piping: One-piece, floor-plate type.
2. Existing Piping: Split-casting, floor-plate type.

3.2 FIELD QUALITY CONTROL

A. Replace broken and damaged escutcheons and floor plates using new materials.

END OF SECTION 230518

SECTION 230519 - METERS AND GAGES FOR HVAC PIPING

PART 1 - GENERAL

1.1 RELATED DOCUMENTS

A. Drawings and general provisions of the Contract, including General and Supplementary Conditions and Division 01 Specification Sections, apply to this Section.

1.2 SUMMARY

A. Section Includes:
1. Liquid-in-glass thermometers.
2. Thermowells.
3. Dial-type pressure gages.
4. Gage attachments.
5. Test plugs.

1.3 ACTION SUBMITTALS

A. Product Data: For each type of product indicated.

B. Wiring Diagrams: For power, signal, and control wiring.

1.4 INFORMATIONAL SUBMITTALS

A. Product Certificates: For each type of meter and gage, from manufacturer.

1.5 CLOSEOUT SUBMITTALS

A. Operation and Maintenance Data: For meters and gages to include in operation and maintenance manuals.

PART 2 - PRODUCTS

2.1 LIQUID-IN-GLASS THERMOMETERS

A. Metal-Case, Industrial-Style, Liquid-in-Glass Thermometers:

1. Manufacturers: Subject to compliance with requirements, provide products by one of the following:

a. Trerice, H. O. Co.
b. Weiss Instruments, Inc.
c. Weksler Glass Thermometer Corp.

2. Standard: ASME B40.200.

3. Case: Cast aluminum; 9-inch nominal size unless otherwise indicated.
4. Case Form: Adjustable angle unless otherwise indicated.
5. Tube: Glass with magnifying lens and blue or red organic liquid.
6. Tube Background: Nonreflective aluminum with permanently etched scale markings graduated in deg F.
7. Window: Glass.
8. Stem: Aluminum and of length to suit installation.

    a. Design for Air-Duct Installation: With ventilated shroud.
    b. Design for Thermowell Installation: Bare stem.

9. Connector: 1-1/4 inches, with ASME B1.1 screw threads.
10. Accuracy: Plus or minus 1 percent of scale range or one scale division, to a maximum of 1.5 percent of scale range.

2.2 DUCT-THERMOMETER MOUNTING BRACKETS

A. Description: Flanged bracket with screw holes, for attachment to air duct and made to hold thermometer stem.

2.3 THERMOWELLS

A. Manufacturers: Same as manufacturer of thermometer being used.

B. Thermowells:

1. Standard: ASME B40.200.
2. Description: Pressure-tight, socket-type fitting made for insertion into piping tee fitting.
3. Material for Use with Copper Tubing: brass.
4. Material for Use with Steel Piping: stainless steel.
5. Type: Stepped shank unless straight or tapered shank is indicated.
6. Bore: Diameter required to match thermometer bulb or stem.
7. Insertion Length: Length required to match thermometer bulb or stem.
8. Lagging Extension: Include on thermowells for insulated piping and tubing.
9. Bushings: For converting size of thermowell's internal screw thread to size of thermometer connection.

C. Heat-Transfer Medium: Mixture of graphite and glycerin.

2.4 PRESSURE GAGES

A. Direct-Mounted, Metal-Case, Dial-Type Pressure Gages:

1. Manufacturers: Subject to compliance with requirements, provide products by one of the following:

    a. Trerice, H. O. Co.

b. Weiss Instruments, Inc.
c. Weksler Glass Thermometer Corp.

2. Standard: ASME B40.100.

3. Case: Liquid-filled type(s); cast aluminum or drawn steel; 4-1/2-inch nominal diameter.
4. Pressure-Element Assembly: Bourdon tube unless otherwise indicated.
5. Pressure Connection: Brass, with NPS 1/4 or NPS 1/2, ASME B1.20.1 pipe threads and bottom-outlet type unless back-outlet type is indicated.
6. Movement: Mechanical, with link to pressure element and connection to pointer.
7. Dial: Nonreflective aluminum with permanently etched scale markings graduated in psi.
8. Pointer: Dark-colored metal.
9. Window: Glass.
10. Ring: Stainless steel.
11. Accuracy: Grade A, plus or minus 1 percent of middle half of scale range.

2.5 GAGE ATTACHMENTS

A. Snubbers: ASME B40.100, brass; with NPS 1/4 or NPS 1/2, ASME B1.20.1 pipe threads and surge-dampening device. Include extension for use on insulated piping.

B. Siphons: Loop-shaped section of stainless-steel pipe with NPS 1/4 or NPS 1/2 pipe threads.

C. Valves: Brass or stainless-steel needle, with NPS 1/4 or NPS 1/2, ASME B1.20.1 pipe threads.

2.6 TEST PLUGS

A. Manufacturers: Subject to compliance with requirements, provide products by one of the following:

1. Trerice, H. O. Co.
2. Weiss Instruments, Inc.
3. Weksler Glass Thermometer Corp.

B. Description: Test-station fitting made for insertion into piping tee fitting.

C. Body: Brass or stainless steel with core inserts and gasketed and threaded cap. Include extended stem on units to be installed in insulated piping.

D. Thread Size: NPS 1/4 or NPS 1/2, ASME B1.20.1 pipe thread.

E. Minimum Pressure and Temperature Rating: 500 psig at 200 deg F.

F. Core Inserts: Chlorosulfonated polyethylene synthetic and EPDM self-sealing rubber.

2.7 TEST-PLUG KITS

A. Manufacturers: Subject to compliance with requirements, provide products by one of the following:

1. Trerice, H. O. Co.
2. Weiss Instruments, Inc.

B. Furnish one test-plug kit(s) containing two thermometer(s), one pressure gage and adapter, and carrying case. Thermometer sensing elements, pressure gage, and adapter probes shall be of diameter to fit test plugs and of length to project into piping.

C. Low-Range Thermometer: Small, bimetallic insertion type with 1- to 2-inch- diameter dial and tapered-end sensing element. Dial range shall be at least 25 to 125 deg F.

D. High-Range Thermometer: Small, bimetallic insertion type with 1- to 2-inch- diameter dial and tapered-end sensing element. Dial range shall be at least 0 to 220 deg F.

E. Pressure Gage: Small, Bourdon-tube insertion type with 2- to 3-inch- diameter dial and probe. Dial range shall be at least 0 to 200 psig.

F. Carrying Case: Metal or plastic, with formed instrument padding.

2.8 SIGHT FLOW INDICATORS

A. Manufacturers: Subject to compliance with requirements, provide products by one of the following:

1. Dwyer Instruments, Inc.
2. Emerson Process Management: Rosemount Division.
3. KOBOLD Instruments, Inc. - USA.

B. Description: Piping inline-installation device for visual verification of flow.

C. Construction: Bronze or stainless-steel body, with sight glass and ball, flapper, or paddle wheel indicator, and threaded or flanged ends.

D. Minimum Pressure Rating: 150 psig.

E. Minimum Temperature Rating: 200 deg F.

F. End Connections for NPS 2 and Smaller: Threaded.

G. End Connections for NPS 2-1/2 and Larger: Flanged.

PART 3 - EXECUTION

3.1 INSTALLATION

A. Install thermowells with socket extending one-third of pipe diameter and in vertical position in piping tees.

B. Install thermowells with extension on insulated piping.

C. Fill thermowells with heat-transfer medium.

D. Install direct-mounted thermometers in thermowells and adjust vertical and tilted positions.

E. Install duct-thermometer mounting brackets in walls of ducts. Attach to duct with screws.

F. Install direct-mounted pressure gages in piping tees with pressure gage located on pipe at the most readable position.

G. Install valve and snubber in piping for each pressure gage for fluids (except steam).

H. Install test plugs in piping tees.

I. Install flow indicators in piping systems in accessible positions for easy viewing.

J. Install thermometers in the following locations:

1. Inlet and outlet of each hydronic zone.
2. Inlet and outlet of each hydronic boiler.
3. Two inlets and two outlets of each chiller.
4. Inlet and outlet of each hydronic coil in air-handling units.
5. Two inlets and two outlets of each hydronic heat exchanger.
6. Inlet and outlet of each thermal-storage tank.
7. Outside-, return-, supply-, and mixed-air ducts.

K. Install pressure gages in the following locations:

1. Discharge of each pressure-reducing valve.
2. Inlet and outlet of each chiller chilled-water and condenser-water connection.
3. Suction and discharge of each pump.

3.2 CONNECTIONS

A. Install meters and gages adjacent to machines and equipment to allow service and maintenance of meters, gages, machines, and equipment.

3.3 ADJUSTING

A. After installation, calibrate meters according to manufacturer's written instructions.

B. Adjust faces of meters and gages to proper angle for best visibility.

C. Thermometer stems shall be of length to match thermowell insertion length.

3.4 SCALE-RANGE SCHEDULE

A. Thermometer Scale Range for Chilled-Water Piping: 0 to 100 deg F.

B. Thermometer Scale Range for Condenser-Water Piping: 0 to 100 deg F.

C. Thermometer Scale Range for Heating, Hot-Water Piping: 0 to 250 deg F.

D. Thermometer Scale Range for Air Ducts: Minus 40 to plus 110 deg F.

E. Pressure Gauge Scale Range for Chilled-Water Piping: 0 to 60 PSI.

END OF SECTION 230519

SECTION 230523 - GENERAL-DUTY VALVES FOR HVAC PIPING

PART 1 - GENERAL

1.1 RELATED DOCUMENTS

A. Drawings and general provisions of the Contract, including General and Supplementary Conditions and Division 01 Specification Sections, apply to this Section.

1.2 SUMMARY

A. Section Includes:

1. Bronze angle valves.
2. Brass ball valves.
3. Bronze ball valves.
4. Iron ball valves.
5. Iron, single-flange butterfly valves.
6. Iron, grooved-end butterfly valves.
7. High-performance butterfly valves.
8. Bronze lift check valves.
9. Bronze swing check valves.
10. Iron swing check valves.
11. Iron swing check valves with closure control.
12. Iron, grooved-end swing-check valves.
13. Iron, center-guided check valves.
14. Iron, plate-type check valves.
15. Bronze gate valves.
16. Iron gate valves.
17. Bronze globe valves.
18. Iron globe valves.
19. Chainwheels.

B. Related Sections:

1. Division 23 HVAC piping Sections for specialty valves applicable to those Sections only.
2. Division 23 Section "Identification for HVAC Piping and Equipment" for valve tags and schedules.

1.3 DEFINITIONS

A. CWP: Cold working pressure.

B. EPDM: Ethylene propylene copolymer rubber.

C. NBR: Acrylonitrile-butadiene, Buna-N, or nitrile rubber.

D. NRS: Nonrising stem.

E. OS&Y: Outside screw and yoke.

F. RS: Rising stem.

1.4 SUBMITTALS

A. Product Data: For each type of valve indicated.

1.5 QUALITY ASSURANCE

A. Source Limitations for Valves: Obtain each type of valve from single source from single manufacturer.

B. ASME Compliance:

1. ASME B16.10 and ASME B16.34 for ferrous valve dimensions and design criteria.
2. ASME B31.1 for power piping valves.
3. ASME B31.9 for building services piping valves.

1.6 DELIVERY, STORAGE, AND HANDLING

A. Prepare valves for shipping as follows:

1. Protect internal parts against rust and corrosion.
2. Protect threads, flange faces, grooves, and weld ends.
3. Set angle, gate, and globe valves closed to prevent rattling.
4. Set ball and plug valves open to minimize exposure of functional surfaces.
5. Set butterfly valves closed or slightly open.
6. Block check valves in either closed or open position.

B. Use the following precautions during storage:

1. Maintain valve end protection.
2. Store valves indoors and maintain at higher than ambient dew point temperature. If outdoor storage is necessary, store valves off the ground in watertight enclosures.

C. Use sling to handle large valves; rig sling to avoid damage to exposed parts. Do not use handwheels or stems as lifting or rigging points.

PART 2 - PRODUCTS

2.1 MANUFACTURERS

A. In other Part 2 articles where subparagraph titles below introduce lists, the following requirements apply for product selection:
1. Manufacturers: Subject to compliance with requirements, provide products by the manufacturers specified.

2.2 VALVES, GENERAL

A. Refer to Part 3 "Valve Applications" Article for applications of valves.

B. Bronze Valves: NPS 2 and smaller with threaded ends, unless otherwise indicated.

C. Ferrous Valves: NPS 2-1/2 and larger with flanged ends, unless otherwise indicated.

D. Valve Pressure and Temperature Ratings: Not less than indicated and as required for system pressures and temperatures.

E. Valve Sizes: Same as upstream pipe, unless otherwise indicated.

F. Valve Actuators:

1. Chainwheel: For attachment to valves, of size and mounting height, as indicated in the "Valve Installation" Article in Part 3.
2. Gear Drive: For quarter-turn valves NPS 8 and larger.
3. Handwheel: For valves other than quarter-turn types.
4. Lever Handle: For quarter-turn valves NPS 6 and smaller, except plug valves.
5. Wrench: For plug valves with square heads. Furnish Owner with 1 wrench for every 10 plug valves, for each size square plug head.

G. Extended Valve Stems: On insulated valves.

H. Valve Flanges: ASME B16.1 for cast-iron valves, ASME B16.5 for steel valves, and ASME B16.24 for bronze valves.

I. Valve Grooved Ends: AWWA C606.

1. Threaded: With threads according to ASME B1.20.1.

J. Valve Bypass and Drain Connections: MSS SP-45.

2.3 COPPER-ALLOY BALL VALVES

A. Manufacturers:

1. Copper-Alloy Ball Valves:
   a. Crane Co.; Crane Valve Group; Stockham Div.
   b. Grinnell Corporation.
   c. NIBCO INC.
   d. Watts Industries, Inc.; Water Products Div.
   e. Kitz Corporation

B. Copper-Alloy Ball Valves, General: MSS SP-110.

C. Two-Piece, Copper-Alloy Ball Valves: bronze body with full-port, chrome-plated bronze ball; PTFE or TFE seats; and 600-psig minimum CWP rating and blowout-proof stem.

D. Copper-Alloy Ball Valves: Two-piece bronze body with exhaust vent opening, chrome-plated ball with vent, blowout-proof stem, locking handle, and working pressure rating 600-psigCWP.

2.4 PLUG VALVES

A. Plug Valves: MSS SP-78, 175-psi CWP, ASTM A 126 cast-iron body and bonnet, cast-iron plug, Buna N, Viton, or teflon packing, flanged or grooved end connections:

1. Operator: Lever.

2.5 FERROUS-ALLOY BALL VALVES

A. Manufacturers:
1. Crane Co.; Crane Valve Group; Stockham Div.
2. NIBCO INC.
3. Kitz Corporation

B. Ferrous-Alloy Ball Valves, General: MSS SP-72, with flanged ends.

C. Ferrous-Alloy Ball Valves: Class 150, full port.

2.6 FERROUS-ALLOY BUTTERFLY VALVES

A. Manufacturers:

1. Ferrous-Alloy Butterfly Valves:
   a. Keystone
   b. Kitz Corporation
   c. Nibco

B. Butterfly Valves: MSS SP-67, 200-psi CWP, for tight shutoff, 150-psi maximum pressure differential, ASTM A 126 cast-iron body and bonnet, extended neck, stainless-steel stem, field-replaceable EPDM or Buna N sleeve and stem seals, fully flanged style:

1. Disc Type: Elastomer-coated ductile iron.
2. Gear Drive: For quarter-turn valves NPS 8 and larger.
3. Operator for Sizes 2 Inchesto 6 Inches: Standard lever handle with memory stop.

2.7 BRONZE CHECK VALVES

A. Manufacturers:

1. Type 4, Bronze, Swing Check Valves with Nonmetallic Disc:
   a. Crane Co.; Crane Valve Group; Stockham Div.
   b. Grinnell Corporation.
   c. Milwaukee Valve Company.
   d. NIBCO INC.
   e. Red-White Valve Corp.

f. Watts Industries, Inc.; Water Products Div.
g. Kitz Corporation

B. Bronze Check Valves, General: MSS SP-80.

C. Type 4, Class 125, Bronze, Swing Check Valves: Bronze body with nonmetallic disc and bronze seat.

2.8 FERROUS-ALLOY WAFER CHECK VALVES

A. Manufacturers:

1. Dual-Plate, Ferrous-Alloy, Wafer Check Valves:
   a. Crane Co.; Crane Valve Group; Stockham Div.
   b. Grinnell Corporation.
   c. NIBCO INC.
   d. Red-White Valve Corp.
   e. Watts Industries, Inc.; Water Products Div.
   f. Kitz Corporation

B. Ferrous-Alloy Wafer Check Valves, General: API 594, spring loaded.

C. Dual-Plate, Class 125 or 150, Ferrous-Alloy, Wafer Check Valves: Flangeless body.

2.9 CAST-IRON GLOBE VALVES

A. Manufacturers:

1. Type I, Cast-Iron Globe Valves with Metal Seats:
   a. Crane Co.; Crane Valve Group; Stockham Div.
   b. Grinnell Corporation.
   c. NIBCO INC.
   d. Red-White Valve Corp.
   e. Kitz Corporation

B. Cast-Iron Globe Valves, General: MSS SP-85.

C. Type I, Class 125, Cast-Iron Globe Valves: Gray-iron body with bronze seats.

2.10 BRONZE GATE VALVES

A. Manufacturers:

1. Bronze, Gate Valves:
   a. Crane Co.; Crane Valve Group; Stockham Div.
   b. Grinnell Corporation.
   c. NIBCO INC.
   d. Powell, Wm. Co.
   e. Red-White Valve Corp.

f. Watts Industries, Inc.; Water Products Div.
g. Kitz Corporation

B. Bronze Gate Valves, General: MSS SP-80, with ferrous-alloy handwheel.

C. Type 1, Class 125, Bronze Gate Valves: Bronze body with nonrising stem and bronze solid wedge and union-ring bonnet.

2.11 BRONZE GLOBE VALVES

A. Manufacturers:

1. Type 2, Bronze Globe Valves with Nonmetallic Disc:
   a. Crane Co.; Crane Valve Group; Stockham Div.
   b. Grinnell Corporation.
   c. NIBCO INC.
   d. Red-White Valve Corp.
   e. Kitz Corporation

B. Bronze Globe Valves, General: MSS SP-80, with ferrous-alloy handwheel.

C. Type 2, Class 125, Bronze Globe Valves: Bronze body with PTFE or TFE disc and union-ring bonnet.

2.12 CHAINWHEELS

A. Manufacturers:

1. Babbitt Steam Specialty Co.
2. Roto Hammer Industries.
3. Trumbull Industries.

B. Description: Valve actuation assembly with sprocket rim, brackets, and chain.

1. Brackets: Type, number, size, and fasteners required to mount actuator on valve.
2. Attachment: For connection to butterfly valve stems.
3. Sprocket Rim with Chain Guides: Ductile iron of type and size required for valve. Include zinc coating.
4. Chain: Hot-dip, galvanized steel, of size required to fit sprocket rim.

PART 3 - EXECUTION

3.1 EXAMINATION

A. Examine piping system for compliance with requirements for installation tolerances and other conditions affecting performance.
   1. Proceed with installation only after unsatisfactory conditions have been corrected.

B. Examine valve interior for cleanliness, freedom from foreign matter, and corrosion. Remove special packing materials, such as blocks, used to prevent disc movement during shipping and handling.

C. Operate valves in positions from fully open to fully closed. Examine guides and seats made accessible by such operations.

D. Examine threads on valve and mating pipe for form and cleanliness.

E. Examine mating flange faces for conditions that might cause leakage. Check bolting for proper size, length, and material. Verify that gasket is of proper size, that its material composition is suitable for service, and that it is free from defects and damage.

F. Do not attempt to repair defective valves; replace with new valves.

3.2 VALVE INSTALLATION

A. Install valves with unions or flanges at each piece of equipment arranged to allow service, maintenance, and equipment removal without system shutdown.

B. Locate valves for easy access and provide separate support where necessary.

C. Install valves in horizontal piping with stem at or above center of pipe.

D. Install valves in position to allow full stem movement.

E. Install chainwheels on operators for valves NPS 4and larger and more than 96 inches above floor. Extend chains to 60 inches above finished floor.

F. Install check valves for proper direction of flow and as follows:

1. Swing Check Valves: In horizontal position with hinge pin level.
2. Plate-Type Check Valves: In horizontal or vertical position, between flanges.
3. Lift Check Valves: With stem upright and plumb.

3.3 GENERAL REQUIREMENTS FOR VALVE APPLICATIONS

A. If valve applications are not indicated, use the following:

1. Shutoff Service: Ball, butterfly or plug valves.
2. Butterfly Valve Dead-End Service: Single-flange (lug) type.
3. Throttling Service: Globe, angle or ball valves.
4. Pump-Discharge Check Valves: Spring-loaded, lift-disc check valves

B. If valves with specified SWP classes or CWP ratings are not available, the same types of valves with higher SWP classes or CWP ratings may be substituted.

C. Select valves, except wafer types, with the following end connections:

1. For Copper Tubing, NPS 2 and Smaller: Threaded ends except where solder-joint valve-end option is indicated in valve schedules below.
2. For Copper Tubing, NPS 2-1/2 to NPS 4: Flanged ends except where threaded valve-end option is indicated in valve schedules below.
3. For Steel Piping, NPS 2 and Smaller: Threaded ends.
4. For Steel Piping, NPS 2-1/2 to NPS 4: Flanged ends except where threaded valve-end option is indicated in valve schedules below.
5. For Steel Piping, NPS 5 and Larger: Flanged ends.
6. For Grooved-End Steel Piping: Valve ends may be grooved.

3.4 CHILLED-WATER AND HEATING-WATER VALVE SCHEDULE

A. Chilled-Water Systems: Use the following valve types:

1. Gate Valves: Class 150, bronze body; or Class 125, cast-iron body.
2. Ball Valves: Class 150, 600-psi CWP, with stem extension and memory stop.
3. Plug Valves: Buna N packing.
4. Globe Valves: Class 125, bronze body with bronze or teflon disc; or Class 125, cast-iron body.
5. Butterfly Valves: Nickel-plated ductile iron, aluminum bronze, or elastomer-coated ductile iron disc; EPDM sleeve and stem seals.
6. Check Valves: Dual-plate, wafer, Class 150 ferrous alloy.

3.5 JOINT CONSTRUCTION

A. Refer to Division 23 Sections for basic piping joint construction.

B. Grooved Joints: Assemble joints with keyed coupling housing, gasket, lubricant, and bolts according to coupling and fitting manufacturer's written instructions.

C. Soldered Joints: Use ASTM B 813, water-flushable, lead-free flux; ASTM B 32, lead-free-alloy solder; and ASTM B 828 procedure, unless otherwise indicated.

3.6 ADJUSTING

A. Adjust or replace valve packing after piping systems have been tested and put into service but before final adjusting and balancing. Replace valves if persistent leaking occurs.

END OF SECTION 230523

SECTION 230529 - HANGERS AND SUPPORTS FOR HVAC PIPING AND EQUIPMENT

PART 1 - GENERAL

1.1 RELATED DOCUMENTS

A. Drawings and general provisions of the Contract, including General and Supplementary Conditions and Division 01 Specification Sections, apply to this Section.

1.2 SUMMARY

A. Section Includes:

1. Metal pipe hangers and supports.
2. Trapeze pipe hangers.
3. Metal framing systems.
4. Thermal-hanger shield inserts.
5. Fastener systems.
6. Pipe stands.
7. Equipment supports.

B. Related Sections:

1. Section 055000 "Metal Fabrications" for structural-steel shapes and plates for trapeze hangers for pipe and equipment supports.
2. Section 230516 "Expansion Fittings and Loops for HVAC Piping" for pipe guides and anchors.
3. Section 230548.13 "Vibration Controls for HVAC" for vibration isolation devices.
4. Section 233113 "Metal Ducts" and Section 233116 "Nonmetal Ducts" for duct hangers and supports.

1.3 DEFINITIONS

A. MSS: Manufacturers Standardization Society of The Valve and Fittings Industry Inc.

1.4 PERFORMANCE REQUIREMENTS

A. Delegated Design: Design trapeze pipe hangers and equipment supports, including comprehensive engineering analysis by a qualified professional engineer, using performance requirements and design criteria indicated.

B. Structural Performance: Hangers and supports for HVAC piping and equipment shall withstand the effects of gravity loads and stresses within limits and under conditions indicated according to ASCE/SEI 7.

1. Design supports for multiple pipes, including pipe stands, capable of supporting combined weight of supported systems, system contents, and test water.

2. Design equipment supports capable of supporting combined operating weight of supported equipment and connected systems and components.

1.5 ACTION SUBMITTALS

A. Product Data: For each type of product indicated.

B. Shop Drawings: Show fabrication and installation details and include calculations for the following; include Product Data for components:

1. Trapeze pipe hangers.
2. Metal framing systems.
3. Pipe stands.
4. Equipment supports.

C. Delegated-Design Submittal: For trapeze hangers indicated to comply with performance requirements and design criteria, including analysis data signed and sealed by the qualified professional engineer responsible for their preparation.

1. Detail fabrication and assembly of trapeze hangers.
2. Design Calculations: Calculate requirements for designing trapeze hangers.

1.6 INFORMATIONAL SUBMITTALS

A. Welding certificates.

1.7 QUALITY ASSURANCE

A. Structural Steel Welding Qualifications: Qualify procedures and personnel according to AWS D1.1/D1.1M, "Structural Welding Code - Steel."

B. Pipe Welding Qualifications: Qualify procedures and operators according to ASME Boiler and Pressure Vessel Code.

PART 2 - PRODUCTS

2.1 METAL PIPE HANGERS AND SUPPORTS

A. Carbon-Steel Pipe Hangers and Supports:

1. Description: MSS SP-58, Types 1 through 58, factory-fabricated components.
2. Galvanized Metallic Coatings: Pregalvanized or hot dipped.

2.2 TRAPEZE PIPE HANGERS

A. Description: MSS SP-69, Type 59, shop- or field-fabricated pipe-support assembly made from structural carbon-steel shapes with MSS SP-58 carbon-steel hanger rods, nuts, saddles, and U-bolts.

2.3 METAL FRAMING SYSTEMS

A. MFMA Manufacturer Metal Framing Systems:
   1. Manufacturers:
      a. Allied Tube & Conduit.
      b. Cooper B-Line, Inc.
      c. Flex-Strut Inc.
      d. GS Metals Corp.
      e. Thomas & Betts Corporation.
      f. Unistrut Corporation; Tyco International, Ltd.
      g. Wesanco, Inc.
   2. Description: Shop- or field-fabricated pipe-support assembly for supporting multiple parallel pipes.
   3. Standard: MFMA-4.
   4. Channels: Continuous slotted steel channel with inturned lips.
   5. Channel Nuts: Formed or stamped steel nuts or other devices designed to fit into channel slot and, when tightened, prevent slipping along channel.
   6. Hanger Rods: Continuous-thread rod, nuts, and washer made of carbon steel.
   7. Metallic Coating: Hot-dipped galvanized.
   8. Paint Coating: Epoxy.

2.4 THERMAL-HANGER SHIELD INSERTS

A. Manufacturers:
   1. Carpenter & Paterson, Inc.
   2. ERICO/Michigan Hanger Co.
   3. PHS Industries, Inc.
   4. Pipe Shields, Inc.
   5. Rilco Manufacturing Company, Inc.
   6. Value Engineered Products, Inc.

B. Insulation-Insert Material for Piping: ASTM C 552, Type II cellular glass with 100-psig minimum compressive strength and vapor barrier.

C. For Trapeze or Clamped Systems: Insert and shield shall cover entire circumference of pipe.

D. For Clevis or Band Hangers: Insert and shield shall cover lower 180 degrees of pipe.

E. Insert Length: Extend 2 inches beyond sheet metal shield for piping operating below ambient air temperature.

2.5 FASTENER SYSTEMS

A. Mechanical-Expansion Anchors: Insert-wedge-type, stainless- steel anchors, for use in hardened portland cement concrete; with pull-out, tension, and shear capacities appropriate for supported loads and building materials where used.

2.6 PIPE STANDS

A. General Requirements for Pipe Stands: Shop- or field-fabricated assemblies made of manufactured corrosion-resistant components to support roof-mounted piping.

B. Compact Pipe Stand: One-piece plastic unit with integral-rod roller, pipe clamps, or V-shaped cradle to support pipe, for roof installation without membrane penetration.

C. Low-Type, Single-Pipe Stand: One-piece stainless-steel base unit with plastic roller, for roof installation without membrane penetration.

D. High-Type, Single-Pipe Stand:

1. Description: Assembly of base, vertical and horizontal members, and pipe support, for roof installation without membrane penetration.
2. Base: Plastic.
3. Vertical Members: Two or more cadmium-plated-steel or stainless-steel, continuous-thread rods.
4. Horizontal Member: Cadmium-plated-steel or stainless-steel rod with plastic or stainless-steel, roller-type pipe support.

E. High-Type, Multiple-Pipe Stand:

1. Description: Assembly of bases, vertical and horizontal members, and pipe supports, for roof installation without membrane penetration.
2. Bases: One or more; plastic.
3. Vertical Members: Two or more protective-coated-steel channels.
4. Horizontal Member: Protective-coated-steel channel.
5. Pipe Supports: Galvanized-steel, clevis-type pipe hangers.

F. Curb-Mounted-Type Pipe Stands: Shop- or field-fabricated pipe supports made from structural-steel shapes, continuous-thread rods, and rollers, for mounting on permanent stationary roof curb.

2.7 EQUIPMENT SUPPORTS

A. Description: Welded, shop- or field-fabricated equipment support made from structural carbon-steel shapes.

2.8 MISCELLANEOUS MATERIALS

A. Structural Steel: ASTM A 36/A 36M, carbon-steel plates, shapes, and bars; black and galvanized.

B. Grout: ASTM C 1107, factory-mixed and -packaged, dry, hydraulic-cement, nonshrink and nonmetallic grout; suitable for interior and exterior applications.

1. Properties: Nonstaining, noncorrosive, and nongaseous.
2. Design Mix: 5000-psi, 28-day compressive strength.

PART 3 - EXECUTION

3.1 HANGER AND SUPPORT INSTALLATION

A. Metal Pipe-Hanger Installation: Comply with MSS SP-69 and MSS SP-89. Install hangers, supports, clamps, and attachments as required to properly support piping from the building structure.

B. Metal Trapeze Pipe-Hanger Installation: Comply with MSS SP-69 and MSS SP-89. Arrange for grouping of parallel runs of horizontal piping, and support together on field-fabricated trapeze pipe hangers.

1. Pipes of Various Sizes: Support together and space trapezes for smallest pipe size or install intermediate supports for smaller diameter pipes as specified for individual pipe hangers.
2. Field fabricate from ASTM A 36/A 36M, carbon-steel shapes selected for loads being supported. Weld steel according to AWS D1.1/D1.1M.

C. Metal Framing System Installation: Arrange for grouping of parallel runs of piping, and support together on field-assembled metal framing systems.

D. Thermal-Hanger Shield Installation: Install in pipe hanger or shield for insulated piping.

E. Fastener System Installation:
1. Install mechanical-expansion anchors in concrete after concrete is placed and completely cured. Install fasteners according to manufacturer's written instructions.

F. Pipe Stand Installation:

1. Pipe Stand Types except Curb-Mounted Type: Assemble components and mount on smooth roof surface. Do not penetrate roof membrane.
2. Curb-Mounted-Type Pipe Stands: Assemble components or fabricate pipe stand and mount on permanent, stationary roof curb. See Section 077200 "Roof Accessories" for curbs.

G. Install hangers and supports complete with necessary attachments, inserts, bolts, rods, nuts, washers, and other accessories.

H. Equipment Support Installation: Fabricate from welded-structural-steel shapes.

I. Install hangers and supports to allow controlled thermal and seismic movement of piping systems, to permit freedom of movement between pipe anchors, and to facilitate action of expansion joints, expansion loops, expansion bends, and similar units.

J. Install lateral bracing with pipe hangers and supports to prevent swaying.

K. Install building attachments within concrete slabs or attach to structural steel. Install additional attachments at concentrated loads, including valves, flanges, and strainers, NPS 2-1/2 and larger and at changes in direction of piping. Install concrete inserts before concrete is placed; fasten inserts to forms and install reinforcing bars through openings at top of inserts.

L. Load Distribution: Install hangers and supports so that piping live and dead loads and stresses from movement will not be transmitted to connected equipment.

M. Pipe Slopes: Install hangers and supports to provide indicated pipe slopes and to not exceed maximum pipe deflections allowed by ASME B31.9 for building services piping.

N. Insulated Piping:

1. Attach clamps and spacers to piping.

    a. Piping Operating above Ambient Air Temperature: Clamp may project through insulation.
    b. Piping Operating below Ambient Air Temperature: Use thermal-hanger shield insert with clamp sized to match OD of insert.
    c. Do not exceed pipe stress limits allowed by ASME B31.9 for building services piping.

2. Install MSS SP-58, Type 39, protection saddles if insulation without vapor barrier is indicated. Fill interior voids with insulation that matches adjoining insulation.

    a. Option: Thermal-hanger shield inserts may be used. Include steel weight-distribution plate for pipe NPS 4 and larger if pipe is installed on rollers.

3. Install MSS SP-58, Type 40, protective shields on cold piping with vapor barrier. Shields shall span an arc of 180 degrees.

    a. Option: Thermal-hanger shield inserts may be used. Include steel weight-distribution plate for pipe NPS 4 and larger if pipe is installed on rollers.

4. Shield Dimensions for Pipe: Not less than the following:

    a. NPS 1/4 to NPS 3-1/2: 12 inches long and 0.048 inch thick.
    b. NPS 4: 12 inches long and 0.06 inch thick.
    c. NPS 5 and NPS 6: 18 inches long and 0.06 inch thick.
    d. NPS 8 to NPS 14: 24 inches long and 0.075 inch thick.
    e. NPS 16 to NPS 24: 24 inches long and 0.105 inch thick.

5. Pipes NPS 8 and Larger: Include wood or reinforced calcium-silicate-insulation inserts of length at least as long as protective shield.
6. Thermal-Hanger Shields: Install with insulation same thickness as piping insulation.

3.2 EQUIPMENT SUPPORTS

A. Fabricate structural-steel stands to suspend equipment from structure overhead or to support equipment above floor.

B. Grouting: Place grout under supports for equipment and make bearing surface smooth.

C. Provide lateral bracing, to prevent swaying, for equipment supports.

3.3 METAL FABRICATIONS

A. Cut, drill, and fit miscellaneous metal fabrications for trapeze pipe hangers and equipment supports.

B. Fit exposed connections together to form hairline joints. Field weld connections that cannot be shop welded because of shipping size limitations.

C. Field Welding: Comply with AWS D1.1/D1.1M procedures for shielded, metal arc welding; appearance and quality of welds; and methods used in correcting welding work; and with the following:

1. Use materials and methods that minimize distortion and develop strength and corrosion resistance of base metals.
2. Obtain fusion without undercut or overlap.
3. Remove welding flux immediately.
4. Finish welds at exposed connections so no roughness shows after finishing and so contours of welded surfaces match adjacent contours.

3.4 ADJUSTING

A. Hanger Adjustments: Adjust hangers to distribute loads equally on attachments and to achieve indicated slope of pipe.

B. Trim excess length of continuous-thread hanger and support rods to 1-1/2 inches.

3.5 PAINTING

A. Touchup: Clean field welds and abraded areas of shop paint. Paint exposed areas immediately after erecting hangers and supports. Use same materials as used for shop painting. Comply with SSPC-PA 1 requirements for touching up field-painted surfaces.

1. Apply paint by brush or spray to provide a minimum dry film thickness of 2.0 mils.

B. Touchup: Cleaning and touchup painting of field welds, bolted connections, and abraded areas of shop paint on miscellaneous metal are specified in Division 09 Sections.

C. Galvanized Surfaces: Clean welds, bolted connections, and abraded areas and apply galvanizing-repair paint to comply with ASTM A 780.

3.6 HANGER AND SUPPORT SCHEDULE

A. Specific hanger and support requirements are in Sections specifying piping systems and equipment.

B. Comply with MSS SP-69 for pipe-hanger selections and applications that are not specified in piping system Sections.

C. Use hangers and supports with galvanized metallic coatings for piping and equipment that will not have field-applied finish.

D. Use nonmetallic coatings on attachments for electrolytic protection where attachments are in direct contact with copper tubing.

E. Use carbon-steel pipe hangers and supports metal trapeze pipe hangers and attachments for general service applications.

F. Use stainless-steel pipe hangers and stainless-steel attachments for hostile environment applications.

G. Use copper-plated pipe hangers and copper attachments for copper piping and tubing.

H. Use padded hangers for piping that is subject to scratching.

I. Use thermal-hanger shield inserts for insulated piping and tubing.

J. Horizontal-Piping Hangers and Supports: Unless otherwise indicated and except as specified in piping system Sections, install the following types:

1. Adjustable, Steel Clevis Hangers (MSS Type 1): For suspension of noninsulated or insulated, stationary pipes NPS 1/2 to NPS 30.
2. Pipe Saddle Supports (MSS Type 36): For support of pipes NPS 4 to NPS 36, with steel-pipe base stanchion support and cast-iron floor flange or carbon-steel plate.
3. Pipe Stanchion Saddles (MSS Type 37): For support of pipes NPS 4 to NPS 36, with steel-pipe base stanchion support and cast-iron floor flange or carbon-steel plate, and with U-bolt to retain pipe.
4. Adjustable Roller Hangers (MSS Type 43): For suspension of pipes NPS 2-1/2 to NPS 24, from single rod if horizontal movement caused by expansion and contraction might occur.
5. Complete Pipe Rolls (MSS Type 44): For support of pipes NPS 2 to NPS 42 if longitudinal movement caused by expansion and contraction might occur but vertical adjustment is not necessary.
6. Pipe Roll and Plate Units (MSS Type 45): For support of pipes NPS 2 to NPS 24 if small horizontal movement caused by expansion and contraction might occur and vertical adjustment is not necessary.
7. Adjustable Pipe Roll and Base Units (MSS Type 46): For support of pipes NPS 2 to NPS 30 if vertical and lateral adjustment during installation might be required in addition to expansion and contraction.

K. Vertical-Piping Clamps: Unless otherwise indicated and except as specified in piping system Sections, install the following types:

1. Extension Pipe or Riser Clamps (MSS Type 8): For support of pipe risers NPS 3/4 to NPS 24.
2. Carbon- or Alloy-Steel Riser Clamps (MSS Type 42): For support of pipe risers NPS 3/4 to NPS 24 if longer ends are required for riser clamps.

L. Hanger-Rod Attachments: Unless otherwise indicated and except as specified in piping system Sections, install the following types:

1. Steel Turnbuckles (MSS Type 13): For adjustment up to 6 inches for heavy loads.
2. Steel Clevises (MSS Type 14): For 120 to 450 deg F piping installations.
3. Swivel Turnbuckles (MSS Type 15): For use with MSS Type 11, split pipe rings.
4. Malleable-Iron Sockets (MSS Type 16): For attaching hanger rods to various types of building attachments.
5. Steel Weldless Eye Nuts (MSS Type 17): For 120 to 450 deg F piping installations.

M. Building Attachments: Unless otherwise indicated and except as specified in piping system Sections, install the following types:

1. Steel or Malleable Concrete Inserts (MSS Type 18): For upper attachment to suspend pipe hangers from concrete ceiling.
2. Top-Beam C-Clamps (MSS Type 19): For use under roof installations with bar-joist construction, to attach to top flange of structural shape.
3. Side-Beam or Channel Clamps (MSS Type 20): For attaching to bottom flange of beams, channels, or angles.
4. Center-Beam Clamps (MSS Type 21): For attaching to center of bottom flange of beams.
5. Welded Beam Attachments (MSS Type 22): For attaching to bottom of beams if loads are considerable and rod sizes are large.
6. C-Clamps (MSS Type 23): For structural shapes.
7. Top-Beam Clamps (MSS Type 25): For top of beams if hanger rod is required tangent to flange edge.
8. Side-Beam Clamps (MSS Type 27): For bottom of steel I-beams.
9. Steel-Beam Clamps with Eye Nuts (MSS Type 28): For attaching to bottom of steel I-beams for heavy loads.
10. Linked-Steel Clamps with Eye Nuts (MSS Type 29): For attaching to bottom of steel I-beams for heavy loads, with link extensions.
11. Malleable-Beam Clamps with Extension Pieces (MSS Type 30): For attaching to structural steel.
12. Welded-Steel Brackets: For support of pipes from below or for suspending from above by using clip and rod. Use one of the following for indicated loads:

    a. Light (MSS Type 31): 750 lb.
    b. Medium (MSS Type 32): 1500 lb.
    c. Heavy (MSS Type 33): 3000 lb.
13. Horizontal Travelers (MSS Type 58): For supporting piping systems subject to linear horizontal movement where headroom is limited.

N. Saddles and Shields: Unless otherwise indicated and except as specified in piping system Sections, install the following types:

1. Steel-Pipe-Covering Protection Saddles (MSS Type 39): To fill interior voids with insulation that matches adjoining insulation.

2. Protection Shields (MSS Type 40): Of length recommended in writing by manufacturer to prevent crushing insulation.
3. Thermal-Hanger Shield Inserts: For supporting insulated pipe.

O. Comply with MSS SP-69 for trapeze pipe-hanger selections and applications that are not specified in piping system Sections.

P. Comply with MFMA-103 for metal framing system selections and applications that are not specified in piping system Sections.

Q. Use mechanical-expansion anchors instead of building attachments where required in concrete construction.

END OF SECTION 230529

SECTION 230548.13 - VIBRATION CONTROLS FOR HVAC

PART 1 - GENERAL

1.1 RELATED DOCUMENTS

A. Drawings and general provisions of the Contract, including General and Supplementary Conditions and Division 01 Specification Sections, apply to this Section.

1.2 SUMMARY

A. Section Includes:

1. Elastomeric isolation pads.
2. Elastomeric isolation mounts.
3. Restrained elastomeric isolation mounts.
4. Housed-restrained-spring isolators.
5. Elastomeric hangers.
6. Spring hangers.
7. Vibration isolation equipment bases.

B. Related Requirements:

1. Section 210548.13 "Vibration Controls for Fire Suppression" for devices for fire-suppression equipment and systems.
2. Section 220548.13 "Vibration Controls for Plumbing" for devices for plumbing equipment and systems.

1.3 ACTION SUBMITTALS

A. Product Data: For each type of product.

1. Include rated load, rated deflection, and overload capacity for each vibration isolation device.
2. Illustrate and indicate style, material, strength, fastening provision, and finish for each type and size of vibration isolation device type required.

B. Shop Drawings:

1. Detail fabrication and assembly of equipment bases. Detail fabrication including anchorages and attachments to structure and to supported equipment. Include adjustable motor bases, rails, and frames for equipment mounting.
2. Vibration Isolation Base Details: Detail fabrication including anchorages and attachments to structure and to supported equipment. Include adjustable motor bases, rails, and frames for equipment mounting.

C. Delegated-Design Submittal: For each vibration isolation device.

1. Include design calculations for selecting vibration isolators and for designing vibration isolation bases.

D. Wind-Restraint Details:

1. Basic Wind Speed: Refer to Arch.
2. Building Classification Category: Refer to Arch.
3. Code recommended wind pressure multiplied by the maximum area of the HVAC component projected on a vertical plane that is normal to the wind direction, and 45 degrees either side of normal.
4. Design Analysis: To support selection and arrangement of **wind** restraints. Include calculations of combined tensile and shear loads.
5.

1.4 INFORMATIONAL SUBMITTALS

A. Coordination Drawings: Show coordination of vibration isolation device installation for HVAC piping and equipment with other systems and equipment in the vicinity, including other supports and restraints, if any.

B. Qualification Data: For testing agency.

C. Welding certificates.

1.5 CLOSEOUT SUBMITTALS

A. Operation and Maintenance Data: Provide operation and maintenance manuals.

1.6 QUALITY ASSURANCE

A. Welding Qualifications: Qualify procedures and personnel according to AWS D1.1/D1.1M, "Structural Welding Code - Steel."

PART 2 - PRODUCTS

2.1 VIBRATION ISOLATORS

A. Manufacturers: Subject to compliance with requirements, provide products by one of the following:

1. Ace Mountings Co., Inc.
2. Amber/Booth Company, Inc.
3. California Dynamics Corporation.
4. Isolation Technology, Inc.
5. Kinetics Noise Control.
6. Mason Industries.
7. Vibration Eliminator Co., Inc.

8. Vibration Isolation.
9. Vibration Mountings & Controls, Inc.

B. Elastomeric Isolation Pads:
1. Fabrication: Single or multiple layers of sufficient durometer stiffness for uniform loading over pad area.
2. Size: Factory or field cut to match requirements of supported equipment.
3. Pad Material: Oil and water resistant with elastomeric properties.
4. Surface Pattern: Ribbed or Waffle pattern.
5. Infused nonwoven cotton or synthetic fibers.
6. Load-bearing metal plates adhered to pads.
7. Sandwich-Core Material: Resilient and elastomeric.

a. Surface Pattern: Ribbed or Waffle pattern.
b. Infused nonwoven cotton or synthetic fibers.

C. Double-Deflection, Elastomeric Isolation Mounts:
1. Mounting Plates:

a. Top Plate: Encapsulated steel load transfer top plates, factory drilled and threaded.
b. Baseplate: Encapsulated steel bottom plates with holes provided for anchoring to support structure.

2. Elastomeric Material: Molded, oil-resistant rubber, neoprene, or other elastomeric material.

D. Restrained Elastomeric Isolation Mounts
1. Description: All-directional isolator with restraints containing two separate and opposing elastomeric elements that prevent central threaded element and attachment hardware from contacting the housing during normal operation.

a. Housing: Cast-ductile iron or welded steel.
b. Elastomeric Material: Molded, oil-resistant rubber, neoprene, or other elastomeric material.

E. Freestanding, Laterally Stable, Open-Spring Isolators:
1. Outside Spring Diameter: Not less than 80 percent of the compressed height of the spring at rated load.
2. Minimum Additional Travel: 50 percent of the required deflection at rated load.
3. Lateral Stiffness: More than 80 percent of rated vertical stiffness.
4. Overload Capacity: Support 200 percent of rated load, fully compressed, without deformation or failure.
5. Baseplates: Factory-drilled steel plate for bolting to structure with an elastomeric isolator pad attached to the underside. Baseplates shall limit floor load to 500 psig.
6. Top Plate and Adjustment Bolt: Threaded top plate with adjustment bolt and cap screw to fasten and level equipment.

F. Freestanding, Laterally Stable, Open-Spring Isolators with Vertical-Limit Stop Restraint:
1. Housing: Steel housing with vertical-limit stops to prevent spring extension due to weight being removed.

a. Base with holes for bolting to structure with an elastomeric isolator pad attached to the underside. Bases shall limit floor load to 500 psig.
b. Top plate with threaded mounting holes elastomeric pad.
c. Internal leveling bolt that acts as blocking during installation.

2. Restraint: Limit stop as required for equipment and authorities having jurisdiction.
3. Outside Spring Diameter: Not less than 80 percent of the compressed height of the spring at rated load.
4. Minimum Additional Travel: 50 percent of the required deflection at rated load.
5. Lateral Stiffness: More than 80 percent of rated vertical stiffness.
6. Overload Capacity: Support 200 percent of rated load, fully compressed, without deformation or failure.

G. Elastomeric Mount in a Steel Frame with Upper and Lower Steel Hanger Rods:
1. Frame: Steel, fabricated with a connection for an upper threaded hanger rod and an opening on the underside to allow for a maximum of 30 degrees of angular lower hanger-rod misalignment without binding or reducing isolation efficiency.
2. Dampening Element: Molded, oil-resistant rubber, neoprene, or other elastomeric material with a projecting bushing for the underside opening preventing steel to steel contact.

H. Combination Coil-Spring and Elastomeric-Insert Hanger with Spring and Insert in Compression:
1. Frame: Steel, fabricated for connection to threaded hanger rods and to allow for a maximum of 30 degrees of angular hanger-rod misalignment without binding or reducing isolation efficiency.
2. Outside Spring Diameter: Not less than 80 percent of the compressed height of the spring at rated load.
3. Minimum Additional Travel: 50 percent of the required deflection at rated load.
4. Lateral Stiffness: More than 80 percent of rated vertical stiffness.
5. Overload Capacity: Support 200 percent of rated load, fully compressed, without deformation or failure.
6. Elastomeric Element: Molded, oil-resistant rubber or neoprene. Steel-washer-reinforced cup to support spring and bushing projecting through bottom of frame.
7. Adjustable Vertical Stop: Steel washer with neoprene washer "up-stop" on lower threaded rod.
8. Self-centering hanger rod cap to ensure concentricity between hanger rod and support spring coil.

I. Steel Rails: Factory-fabricated, welded, structural-steel rails.

1. Design Requirements: Lowest possible mounting height with not less than 1-inch clearance above the floor. Include equipment anchor bolts and auxiliary motor slide rails.

a. Include supports for suction and discharge elbows for pumps.

2. Structural Steel: Steel shapes, plates, and bars complying with ASTM A 36/A 36M. Rails shall have shape to accommodate supported equipment.
3. Support Brackets: Factory-welded steel brackets on frame for outrigger isolation mountings and to provide for anchor bolts and equipment support.

J. Steel Bases: Factory-fabricated, welded, structural-steel bases and rails.

1. Design Requirements: Lowest possible mounting height with not less than 1-inch clearance above the floor. Include equipment anchor bolts and auxiliary motor slide bases or rails.

a. Include supports for suction and discharge elbows for pumps.

2. Structural Steel: Steel shapes, plates, and bars complying with ASTM A 36/A 36M. Bases shall have shape to accommodate supported equipment.
3. Support Brackets: Factory-welded steel brackets on frame for outrigger isolation mountings and to provide for anchor bolts and equipment support.

2.2 VIBRATION ISOLATION EQUIPMENT BASES

A. Manufacturers: Subject to compliance with requirements, provide products by one of the following:
1. Amber/Booth Company, Inc.
2. California Dynamics Corporation.
3. Isolation Technology, Inc.
4. Kinetics Noise Control.
5. Mason Industries.
6. Vibration Eliminator Co., Inc.
7. Vibration Isolation.
8. Vibration Mountings & Controls, Inc.

B. Inertia Base: Factory-fabricated, welded, structural-steel bases and rails ready for placement of cast-in-place concrete.

1. Design Requirements: Lowest possible mounting height with not less than 1-inch clearance above the floor. Include equipment anchor bolts and auxiliary motor slide bases or rails.

a. Include supports for suction and discharge elbows for pumps.

2. Structural Steel: Steel shapes, plates, and bars complying with ASTM A 36/A 36M. Bases shall have shape to accommodate supported equipment.
3. Support Brackets: Factory-welded steel brackets on frame for outrigger isolation mountings and to provide for anchor bolts and equipment support.
4. Fabrication: Fabricate steel templates to hold equipment anchor-bolt sleeves and anchors in place during placement of concrete. Obtain anchor-bolt templates from supported equipment manufacturer.

PART 3 - EXECUTION

3.1 EXAMINATION

A. Examine areas and equipment to receive vibration isolation control devices for compliance with requirements for installation tolerances and other conditions affecting performance of the Work.

B. Examine roughing-in of reinforcement and cast-in-place anchors to verify actual locations before installation.

C. Proceed with installation only after unsatisfactory conditions have been corrected.

3.2 APPLICATIONS

A. Multiple Pipe Supports: Secure pipes to trapeze member with clamps approved for application by an agency acceptable to authorities having jurisdiction.

3.3 VIBRATION ISOLATION EQUIPMENT BASES INSTALLATION

A. Coordinate the location of embedded connection hardware with supported equipment attachment and mounting points and with requirements for concrete reinforcement and formwork specified in Division 03 Sections.

3.4 VIBRATION-CONTROL AND WIND-RESTRAINT DEVICE INSTALLATION

A. Comply with requirements in Division 07 Section "Roof Accessories" for installation of roof curbs, equipment supports, and roof penetrations.

B. Install cables so they do not bend across edges of adjacent equipment or building structure.

C. Install bushing assemblies for anchor bolts for floor-mounted equipment, arranged to provide resilient media between anchor bolt and mounting hole in concrete base.

D. Install bushing assemblies for mounting bolts for wall-mounted equipment, arranged to provide resilient media where equipment or equipment-mounting channels are attached to wall.

E. Attachment to Structure: If specific attachment is not indicated, anchor bracing to structure at flanges of beams, at upper truss chords of bar joists, or at concrete members.

F. Drilled-in Anchors:
   1. Identify position of reinforcing steel and other embedded items prior to drilling holes for anchors. Do not damage existing reinforcing or embedded items during coring or drilling. Notify the structural engineer if reinforcing steel or other embedded items are encountered during drilling. Locate and avoid prestressed tendons, electrical and telecommunications conduit, and gas lines.
   2. Do not drill holes in concrete or masonry until concrete, mortar, or grout has achieved full design strength.

3. Wedge Anchors: Protect threads from damage during anchor installation. Heavy-duty sleeve anchors shall be installed with sleeve fully engaged in the structural element to which anchor is to be fastened.
4. Adhesive Anchors: Clean holes to remove loose material and drilling dust prior to installation of adhesive. Place adhesive in holes proceeding from the bottom of the hole and progressing toward the surface in such a manner as to avoid introduction of air pockets in the adhesive.
5. Set anchors to manufacturer's recommended torque, using a torque wrench.
6. Install zinc-coated steel anchors for interior and stainless-steel anchors for exterior applications.

3.5 ADJUSTING

A. Adjust isolators after piping system is at operating weight.

B. Adjust active height of spring isolators.

END OF SECTION 230548.13

SECTION 230553 - IDENTIFICATION FOR HVAC PIPING AND EQUIPMENT

PART 1 - GENERAL

1.1 RELATED DOCUMENTS

A. Drawings and general provisions of the Contract, including General and Supplementary Conditions and Division 01 Specification Sections, apply to this Section.

1.2 SUMMARY

A. Section Includes:

1. Equipment labels.
2. Warning signs and labels.
3. Pipe labels.
4. Duct labels.
5. Stencils.
6. Valve tags.
7. Warning tags.

1.3 ACTION SUBMITTALS

A. Product Data: For each type of product.

B. Samples: For color, letter style, and graphic representation required for each identification material and device.

C. Equipment Label Schedule: Include a listing of all equipment to be labeled with the proposed content for each label.

D. Valve numbering scheme.

E. Valve Schedules: For each piping system to include in maintenance manuals.

1.4 COORDINATION

A. Coordinate installation of identifying devices with completion of covering and painting of surfaces where devices are to be applied.

B. Coordinate installation of identifying devices with locations of access panels and doors.

C. Install identifying devices before installing acoustical ceilings and similar concealment.

PART 2 - PRODUCTS

2.1 EQUIPMENT LABELS

A. Plastic Labels for Equipment:
   1. Material and Thickness: Multilayer, multicolor, plastic labels for mechanical engraving, 1/8 inch thick, and having predrilled holes for attachment hardware.
   2. Maximum Temperature: Able to withstand temperatures up to 160 deg F.
   3. Minimum Label Size: Length and width vary for required label content, but not less than 2-1/2 by 3/4 inch.
   4. Minimum Letter Size: 1/4 inch for name of units if viewing distance is less than 24 inches, 1/2 inch for viewing distances up to 72 inches, and proportionately larger lettering for greater viewing distances. Include secondary lettering two-thirds to three-quarters the size of principal lettering.
   5. Fasteners: Stainless-steel rivets or self-tapping screws.
   6. Adhesive: Contact-type permanent adhesive, compatible with label and with substrate.

B. Label Content: Include equipment's Drawing designation or unique equipment number, Drawing numbers where equipment is indicated (plans, details, and schedules), and the Specification Section number and title where equipment is specified.

C. Equipment Label Schedule: For each item of equipment to be labeled, on 8-1/2-by-11-inch bond paper. Tabulate equipment identification number, and identify Drawing numbers where equipment is indicated (plans, details, and schedules) and the Specification Section number and title where equipment is specified. Equipment schedule shall be included in operation and maintenance data.

2.2 WARNING SIGNS AND LABELS

A. Material and Thickness: Multilayer, multicolor, plastic labels for mechanical engraving, 1/8 inch thick, and having predrilled holes for attachment hardware.

B. Maximum Temperature: Able to withstand temperatures up to 160 deg F.

C. Minimum Label Size: Length and width vary for required label content, but not less than 2-1/2 by 3/4 inch.

D. Minimum Letter Size: 1/4 inch for name of units if viewing distance is less than 24 inches, 1/2 inch for viewing distances up to 72 inches, and proportionately larger lettering for greater viewing distances. Include secondary lettering two-thirds to three-quarters the size of principal lettering.

E. Fasteners: Stainless-steel rivets or self-tapping screws.

F. Adhesive: Contact-type permanent adhesive, compatible with label and with substrate.

G. Label Content: Include caution and warning information plus emergency notification instructions.

2.3 PIPE LABELS

A. General Requirements for Manufactured Pipe Labels: Preprinted, color-coded, with lettering indicating service, and showing flow direction according to ASME A13.1.

B. Pretensioned Pipe Labels: Precoiled, semirigid plastic formed to cover full circumference of pipe and to attach to pipe without fasteners or adhesive.

C. Self-Adhesive Pipe Labels: Printed plastic with contact-type, permanent-adhesive backing.

D. Pipe Label Contents: Include identification of piping service using same designations or abbreviations as used on Drawings; also include pipe size and an arrow indicating flow direction.

1. Flow-Direction Arrows: Integral with piping system service lettering to accommodate both directions or as separate unit on each pipe label to indicate flow direction.
2. Lettering Size: At least 1-1/2 inch for viewing distances up to 72 inches and proportionately larger lettering for greater viewing distances.

2.4 DUCT LABELS

A. Material and Thickness: Multilayer, multicolor, plastic labels for mechanical engraving, 1/8 inch thick, and having predrilled holes for attachment hardware.

B. Maximum Temperature: Able to withstand temperatures up to 160 deg F.

C. Minimum Label Size: Length and width vary for required label content, but not less than 2-1/2 by 3/4 inch.

D. Minimum Letter Size: 1/4 inch for name of units if viewing distance is less than 24 inches, 1/2 inch for viewing distances up to 72 inches, and proportionately larger lettering for greater viewing distances. Include secondary lettering two-thirds to three-quarters the size of principal lettering.

E. Fasteners: Stainless-steel rivets or self-tapping screws.

F. Adhesive: Contact-type permanent adhesive, compatible with label and with substrate.

G. Duct Label Contents: Include identification of duct service using same designations or abbreviations as used on Drawings; also include duct size and an arrow indicating flow direction.

1. Flow-Direction Arrows: Integral with duct system service lettering to accommodate both directions or as separate unit on each duct label to indicate flow direction.
2. Lettering Size: At least 1-1/2 inches high.

2.5 VALVE TAGS

A. Description: Stamped or engraved with 1/4-inch letters for piping system abbreviation and 1/2-inch numbers.

1. Tag Material: Brass, 0.032-inch minimum thickness, and having predrilled or stamped holes for attachment hardware.
2. Fasteners: Brass beaded chain.

B. Valve Schedules: For each piping system, on 8-1/2-by-11-inch bond paper. Tabulate valve number, piping system, system abbreviation (as shown on valve tag), location of valve (room or space), normal-operating position (open, closed, or modulating), and variations for identification. Mark valves for emergency shutoff and similar special uses.

1. Valve-tag schedule shall be included in operation and maintenance data.

2.6 WARNING TAGS

A. Description: Preprinted or partially preprinted accident-prevention tags of plasticized card stock with matte finish suitable for writing.

1. Size: 3 by 5-1/4 inches minimum.
2. Fasteners: Brass grommet and wire.
3. Nomenclature: Large-size primary caption such as "DANGER," "CAUTION," or "DO NOT OPERATE."
4. Color: Safety-yellow background with black lettering.

PART 3 - EXECUTION

3.1 PREPARATION

A. Clean piping and equipment surfaces of substances that could impair bond of identification devices, including dirt, oil, grease, release agents, and incompatible primers, paints, and encapsulants.

3.2 GENERAL INSTALLATION REQUIREMENTS

A. Coordinate installation of identifying devices with completion of covering and painting of surfaces where devices are to be applied.

B. Coordinate installation of identifying devices with locations of access panels and doors.

C. Install identifying devices before installing acoustical ceilings and similar concealment.

3.3 EQUIPMENT LABEL INSTALLATION

A. Install or permanently fasten labels on each major item of mechanical equipment.

B. Locate equipment labels where accessible and visible.

3.4 PIPE LABEL INSTALLATION

A. Piping Color Coding: Painting of piping is specified in Division 09 Sections.

B. Stenciled Pipe Label Option: Stenciled labels may be provided instead of manufactured pipe labels, at Installer's option. Install stenciled pipe labels, complying with ASME A13.1, with painted, color-coded bands or rectangles on each piping system.

1. Identification Paint: Use for contrasting background.
2. Stencil Paint: Use for pipe marking.

C. Pipe Label Locations: Locate pipe labels where piping is exposed or above accessible ceilings in finished spaces; machine rooms; accessible maintenance spaces such as shafts, tunnels, and plenums; and exterior exposed locations as follows:

1. Near each valve and control device.
2. Near each branch connection, excluding short takeoffs for fixtures and terminal units. Where flow pattern is not obvious, mark each pipe at branch.
3. Near penetrations and on both sides of through walls, floors, ceilings, and inaccessible enclosures.
4. At access doors, manholes, and similar access points that permit view of concealed piping.
5. Near major equipment items and other points of origination and termination.
6. Spaced at maximum intervals of 50 feet along each run. Reduce intervals to 25 feet in areas of congested piping and equipment.
7. On piping above removable acoustical ceilings. Omit intermediately spaced labels.

D. Directional Flow Arrows: Arrows shall be used to indicate direction of flow in pipes, including pipes where flow is allowed in both directions.

E. Pipe Label Color Schedule: Coordinate with Owner.

3.5 DUCT LABEL INSTALLATION

A. Install self-adhesive duct labels with permanent adhesive on air ducts in the following color codes: Coordinate with Owner.

B. Locate labels near points where ducts enter into and exit from concealed spaces and at maximum intervals of 50 feet in each space where ducts are exposed or concealed by removable ceiling system.

3.6 VALVE-TAG INSTALLATION

A. Install tags on valves and control devices in piping systems, except check valves, valves within factory-fabricated equipment units, shutoff valves, faucets, convenience and lawn-watering hose connections, and HVAC terminal devices and similar roughing-in connections of end-use fixtures and units. List tagged valves in a valve schedule.

3.7 WARNING-TAG INSTALLATION

A. Write required message on, and attach warning tags to, equipment and other items where required.

3.8 PAINTING

A. Clarification: In exposed areas (with no acoustic ceiling tiles), piping and piping insulation shall be painted. Although Division 9 may not specifically call for painting of MEP items, it states paint type and requirements for different materials. To extent possible coordinate painting with Division 9 and with Engineer. Where adequate specifications are not available, use the following general guidelines:
   1. Ferrous Metal: Semi-Gloss, Alkyd-Enamel Finish: 2 finish coats over an enamel undercoat and primer.
      a. Primer: Quick-drying, rust-inhibitive, alkyd-based or epoxy-metal primer, as recommended by the manufacturer for this substrate, applied at spreading rate recommended by the manufacturer to achieve a total dry film thickness of not less than 1.5 mils. S-W: Kem Kromik Universal Metal Primer B50NZ6/B50WZ1.
      b. Undercoat: Alkyd, interior enamel undercoat or semi-gloss, interior, alkyd-enamel finish coat, as recommended by the manufacturer for this substrate, applied at spreading rate recommended by the manufacturer to achieve a total dry film thickness of not less than 1.2 mils. S-W: Pro-mar 200 Interior Alkyd Enamel B34W200 Series.
      c. Finish Coat: Same as undercoat. Semi-gloss, alkyd, interior enamel applied at spreading rate recommended by the manufacturer to achieve a total dry film thickness of not less than 1.2 mils.
   2. ASJ Jacket: Semi-Gloss, Acylic-Enamel Finish: 2 finish coats.
      a. Undercoat: Semi-gloss acrylic latex enamel applied at spreading rate recommended by manufacturer to achieve a dry film thickness of 2.0 mils. S-W: Pro-Mar Interior Latex Egg-Shell Enamel B20W200.
      b. Finish Coat: Same as undercoat. Semi-gloss, acrylic latex enamel applied at spreading rate recommended by the manufacturer to achieve a total dry film thickness of not less than 1.2 mils

B. Final colors shall be coordinated with Owner and Engineer during construction.

END OF SECTION 230553

SECTION 230593 - TESTING, ADJUSTING, AND BALANCING FOR HVAC

PART 1 - GENERAL

1.1 RELATED DOCUMENTS

A. Drawings and general provisions of the Contract, including General and Supplementary Conditions and Division 01 Specification Sections, apply to this Section.

1.2 SUMMARY

A. TAB work shall not be contracted under Division 23 Contractor. Third party TAB Contractor shall be contracted by the Prime Contractor. Coordinate activities and assist TAB Contractor as needed.

B. Scope:
1. In general, TAB services will include air and water balancing at the new chiller plant, DOAS, RTUs, exhaust fans, controls, etc.

C. Section Includes:

1. Balancing Air Systems:
   a. Constant-volume air systems.
   b. Variable-air-volume systems.

2. Balancing Hydronic Piping Systems

3. Testing, Adjusting, and Balancing Equipment:
   a. Motors.
   b. Chillers.
   c. Pumps.
   d. AHUs.
   e. Exhaust Fans.

4. Testing, adjusting, and balancing existing systems and equipment, where indicated on the drawings.
5. Duct leakage tests.
6. Control system verification.
7. Other tests as specified.

1.3 DEFINITIONS

A. AABC: Associated Air Balance Council.

B. BAS: Building automation systems.

C. TAB: Testing, adjusting, and balancing.

D. TABB: Testing, Adjusting, and Balancing Bureau.

E. TAB Specialist: An independent entity meeting qualifications to perform TAB work.

F. TDH: Total dynamic head.

1.4 PREINSTALLATION MEETING

A. TAB representative(s) must attend a preinstallation meeting to develop a mutual understanding of the details and discuss TAB requirements, procedures, and communications.
   1. This meeting may be included as part of the pre-construction meeting or a regular construction meeting early-on in the project, with General Contractor and Owner's representatives / AE team.
   2. TAB firm must have developed strategies and procedures plan prior to meeting.
   3. Minimum Agenda Items:
      a. Discussion of all aspects of scope of work, including specific measurements to be taken on which systems, report submission and quality requirements, coordination and communications.
      b. The Contract Documents examination report.
      c. The TAB plan.
      d. Coordination and cooperation of trades and subcontractors.
      e. Proposed procedures for documentation and communication flow.

1.5 INFORMATIONAL SUBMITTALS

A. Qualification Data: Within 30 days of Contractor's Notice to Proceed, submit documentation that the TAB specialist and this Project's TAB team members meet the qualifications specified in "Quality Assurance" Article.

B. Certified TAB reports.
   1. Standard report forms from AABC, NEBB, or TABB are acceptable.
   2. Report forms from other than AABC, NEBB, or TABB may be acceptable even if organized differently, but must contain the same essential information.

C. Sample report forms.

D. Instrument calibration reports, to include the following:
   1. Instrument type and make.
   2. Serial number.
   3. Application.
   4. Dates of use.
   5. Dates of calibration.

1.6 QUALITY ASSURANCE

A. TAB Specialists Qualifications: Certified by AABC.
   1. TAB Field Supervisor: Employee of the TAB specialist and certified by AABC.
   2. TAB Technician: Employee of the TAB specialist and certified by AABC as a TAB technician.

B. Instrumentation Type, Quantity, Accuracy, and Calibration: Comply with requirements in ASHRAE 111, Section 4, "Instrumentation."

C. ASHRAE Compliance: Applicable requirements in ASHRAE 62.1, Section 7.2.2 - "Air Balancing."

D. ASHRAE/IESNA Compliance: Applicable requirements in ASHRAE/IESNA 90.1, Section 6.7.2.3 - "System Balancing."

1.7 PROJECT CONDITIONS

A. The Owner will occupy portions of existing buildings Owner will occupy the site and existing building during entire TAB period. Reference SECTION 011000 - SUMMARY for more precise dates and stipulations.

B. Cooperate with the Owner during testing, adjusting, and balancing operations to minimize conflicts with the Owner's operations.

PART 2 - PRODUCTS (Not Applicable)

PART 3 - EXECUTION

3.1 EXAMINATION

A. Examine the Contract Documents to become familiar with Project requirements and to discover conditions in systems designs that may preclude proper TAB of systems and equipment.

B. Examine installed systems for balancing devices, such as test ports, gage cocks, thermometer wells, flow-control devices, balancing valves and fittings, and manual volume dampers. Verify that locations of these balancing devices are applicable for intended purpose and are accessible.

C. Examine the approved submittals for HVAC systems and equipment.

D. Examine design data including HVAC system descriptions, statements of design assumptions for environmental conditions and systems output, and statements of philosophies and assumptions about HVAC system and equipment controls.

E. Examine ceiling plenums and underfloor air plenums used for supply, return, or relief air to verify that they are properly separated from adjacent areas. Verify that penetrations in plenum walls are sealed and fire-stopped if required.

F. Examine equipment performance data including fan and pump curves.
   1. Relate performance data to Project conditions and requirements, including system effects that can create undesired or unpredicted conditions that cause reduced capacities in all or part of a system.
   2. Calculate system-effect factors to reduce performance ratings of HVAC equipment when installed under conditions different from the conditions used to rate equipment performance. To calculate system effects for air systems, use tables and charts found in

AMCA 201, "Fans and Systems," or in SMACNA's "HVAC Systems - Duct Design." Compare results with the design data and installed conditions.

G. Examine system and equipment installations and verify that field quality-control testing, cleaning, and adjusting specified in individual Sections have been performed.

H. Examine test reports specified in individual system and equipment Sections.

I. Examine HVAC equipment and verify that bearings are greased, belts are aligned and tight, filters are clean, and equipment with functioning controls is ready for operation.

J. Examine heat-transfer coils for correct piping connections and for clean and straight fins.

K. Examine operating safety interlocks and controls on HVAC equipment.

L. Report deficiencies discovered before and during performance of TAB procedures. Observe and record system reactions to changes in conditions. Record default set points if different from indicated values. Examine strainers. Verify that startup screens have been replaced by permanent screens with indicated perforations.

M. Examine control valves for proper installation for their intended function of throttling, diverting, or mixing fluid flows.

N. Examine heat-transfer coils for correct piping connections and for clean and straight fins.

O. Examine system pumps to ensure absence of entrained air in the suction piping.

P. Examine operating safety interlocks and controls on HVAC equipment.

Q. Report deficiencies discovered before and during performance of TAB procedures. Observe and record system reactions to changes in conditions. Record default set points if different from indicated values.

3.2 PREPARATION

A. At least 15 calendar days prior to any on-site TAB measurements taking place, prepare and submit to Engineer a TAB plan that includes the following:
   1. Equipment and systems to be tested.
   2. Strategies and step-by-step procedures for balancing the systems.
   3. Instrumentation to be used.
   4. Sample forms with specific identification for all equipment.

B. Perform system-readiness checks of HVAC systems and equipment to verify system readiness for TAB work. Include, at a minimum, the following:
   1. Airside:
      a. Verify that leakage and pressure tests on air distribution systems have been satisfactorily completed.
      b. Duct systems are complete with terminals installed.
      c. Volume, smoke, and fire dampers are open and functional.

d. Clean filters are installed.
e. Fans are operating, free of vibration, and rotating in correct direction.
f. Variable-frequency controllers' startup is complete and safeties are verified.
g. Automatic temperature-control systems are operational.
h. Ceilings are installed.
i. Windows and doors are installed.
j. Suitable access to balancing devices and equipment is provided.

2. Hydronics:

a. Verify leakage and pressure tests on water distribution systems have been satisfactorily completed.
b. Piping is complete with terminals installed.
c. Water treatment is complete.
d. Systems are flushed, filled, and air purged.
e. Strainers are pulled and cleaned.
f. Control valves are functioning per the sequence of operation.
g. Shutoff and balance valves have been verified to be 100 percent open.
h. Pumps are started and proper rotation is verified.
i. Pump gage connections are installed directly at pump inlet and outlet flanges or in discharge and suction pipe prior to valves or strainers.
j. Variable-frequency controllers' startup is complete and safeties are verified.
k. Suitable access to balancing devices and equipment is provided.

3.3 GENERAL PROCEDURES FOR TESTING AND BALANCING

A. Perform testing and balancing procedures on each system according to the procedures contained in AABC's "National Standards for Total System Balance" and in this Section.

B. Cut insulation, ducts, pipes, and equipment cabinets for installation of test probes to the minimum extent necessary for TAB procedures.
1. After testing and balancing, patch probe holes in ducts with same material and thickness as used to construct ducts.
2. After testing and balancing, install test ports and duct access doors that comply with requirements in Section 233300 "Air Duct Accessories."
3. Install and join new insulation that matches removed materials. Restore insulation, coverings, vapor barrier, and finish according to Section 230713 "Duct Insulation," Section 230716 "HVAC Equipment Insulation," and Section 230719 "HVAC Piping Insulation."

C. Mark equipment and balancing devices, including damper-control positions, valve position indicators, fan-speed-control levers, and similar controls and devices, with paint or other suitable, permanent identification material to show final settings.

D. Take and report testing and balancing measurements in inch-pound (IP) units.

3.4 GENERAL PROCEDURES FOR BALANCING AIR SYSTEMS

A. Prepare test reports for both fans and outlets. Obtain manufacturer's outlet factors and recommended testing procedures. Cross-check the summation of required outlet volumes with required fan volumes.

B. Prepare schematic diagrams of systems' "as-built" duct layouts.

C. For variable-air-volume systems, develop a plan to simulate diversity.

D. Determine the best locations in main and branch ducts for accurate duct-airflow measurements.

E. Check airflow patterns from the outdoor-air louvers and dampers and the return- and exhaust-air dampers through the supply-fan discharge and mixing dampers.

F. Locate start-stop and disconnect switches, electrical interlocks, and motor starters.

G. Verify that motor starters are equipped with properly sized thermal protection.

H. Check dampers for proper position to achieve desired airflow path.

I. Check for airflow blockages.

J. Check condensate drains for proper connections and functioning.

K. Check for proper sealing of air-handling-unit components.

L. Verify that air duct system is sealed as specified in Section 233113 "Metal Ducts."

3.5 PROCEDURES FOR CONSTANT-VOLUME AIR SYSTEMS

A. Adjust fans to deliver total indicated airflows within the maximum allowable fan speed listed by fan manufacturer.

1. Measure total airflow.

    a. Set outside-air, return-air, and relief-air dampers for proper position that simulates minimum outdoor-air conditions.
    b. Where duct conditions allow, measure airflow by Pitot-tube traverse. If necessary, perform multiple Pitot-tube traverses to obtain total airflow.
    c. Where duct conditions are not suitable for Pitot-tube traverse measurements, a coil traverse may be acceptable.
    d. If a reliable Pitot-tube traverse or coil traverse is not possible, measure airflow at terminals and calculate the total airflow.

2. Measure fan static pressures as follows:

    a. Measure static pressure directly at the fan outlet or through the flexible connection.
    b. Measure static pressure directly at the fan inlet or through the flexible connection.

c. **Measure static pressure across heat transfer coils and other system components as detailed in paragraphs for HEAT-TRANSFER COILS to follow.**
d. Report artificial loading of filters at the time static pressures are measured.

3. Review Record Documents to determine variations in design static pressures versus actual static pressures. Calculate actual system-effect factors. Recommend adjustments to accommodate actual conditions.
4. Obtain approval from Engineer for adjustment of fan speed higher or lower than indicated speed. Comply with requirements in HVAC Sections for air-handling units for adjustment of fans, belts, and pulley sizes to achieve indicated air-handling-unit performance.
5. Do not make fan-speed adjustments that result in motor overload. Consult equipment manufacturers about fan-speed safety factors. Modulate dampers and measure fan-motor amperage to ensure that no overload occurs. Measure amperage in full-cooling, full-heating, economizer, and any other operating mode to determine the maximum required brake horsepower.

B. Adjust volume dampers for main duct, submain ducts, and major branch ducts to indicated airflows.

1. Measure airflow of submain and branch ducts.
2. Adjust submain and branch duct volume dampers for specified airflow.
3. Re-measure each submain and branch duct after all have been adjusted.

C. Adjust air inlets and outlets for each space to indicated airflows.

1. Set airflow patterns of adjustable outlets for proper distribution without drafts.
2. Measure inlets and outlets airflow.
3. Adjust each inlet and outlet for specified airflow.
4. Re-measure each inlet and outlet after they have been adjusted.

D. Verify final system conditions.

1. Re-measure and confirm that minimum outdoor, return, and relief airflows are within design. Readjust to design if necessary.
2. Re-measure and confirm that total airflow is within design.
3. Re-measure all final fan operating data, rpms, volts, amps, and static profile.
4. Mark all final settings.
5. Test system in economizer mode. Verify proper operation and adjust if necessary.
6. Measure and record all operating data.
7. Record final fan-performance data.

3.6 PROCEDURES FOR VARIABLE-AIR-VOLUME SYSTEMS

A. Adjust the variable-air-volume systems as follows:

1. Verify that the system static pressure sensor is located two-thirds of the distance down the duct from the fan discharge.
2. Verify that the system is under static pressure control.

3. Select the terminal unit that is most critical to the supply-fan airflow. Measure inlet static pressure, and adjust system static pressure control set point so the entering static pressure for the critical terminal unit is not less than the sum of the terminal-unit manufacturer's recommended minimum inlet static pressure plus the static pressure needed to overcome terminal-unit discharge system losses.
4. Calibrate and balance each terminal unit for maximum and minimum design airflow as follows:

    a. Adjust controls so that terminal is calling for maximum airflow. Some controllers require starting with minimum airflow. Verify calibration procedure for specific project.
    b. Measure airflow and adjust calibration factor as required for design maximum airflow. Record calibration factor.
    c. When maximum airflow is correct, balance the air outlets downstream from terminal units.
    d. Adjust controls so that terminal is calling for minimum airflow.
    e. Measure airflow and adjust calibration factor as required for design minimum airflow. Record calibration factor. If no minimum calibration is available, note any deviation from design airflow.
    f. When in full cooling or full heating, ensure that there is no mixing of hot-deck and cold-deck airstreams unless so designed.
    g. On constant volume terminals, in critical areas where room pressure is to be maintained, verify that the airflow remains constant over the full range of full cooling to full heating. Note any deviation from design airflow or room pressure.

5. After terminals have been calibrated and balanced, test and adjust system for total airflow. Adjust fans to deliver total design airflows within the maximum allowable fan speed listed by fan manufacturer.

    a. Set outside-air, return-air, and relief-air dampers for proper position that simulates minimum outdoor-air conditions.
    b. Set terminals for maximum airflow. If system design includes diversity, adjust terminals for maximum and minimum airflow so that connected total matches fan selection and simulates actual load in the building.
    c. Where duct conditions allow, measure airflow by Pitot-tube traverse. If necessary, perform multiple Pitot-tube traverses to obtain total airflow.
    d. Where duct conditions are not suitable for Pitot-tube traverse measurements, a coil traverse may be acceptable.
    e. If a reliable Pitot-tube traverse or coil traverse is not possible, measure airflow at terminals and calculate the total airflow.

6. Measure fan static pressures as follows:

    a. Measure static pressure directly at the fan outlet or through the flexible connection.
    b. Measure static pressure directly at the fan inlet or through the flexible connection.
    c. Measure static pressure across each component that makes up the air-handling system.
    d. Report any artificial loading of filters at the time static pressures are measured.

7. Set final return and outside airflow to the fan while operating at maximum return airflow and minimum outdoor airflow.

a. Balance the return-air ducts and inlets the same as described for constant-volume air systems.
b. Verify that terminal units are meeting design airflow under system maximum flow.

8. Re-measure the inlet static pressure at the most critical terminal unit and adjust the system static pressure set point to the most energy-efficient set point to maintain the optimum system static pressure. Record set point and give to controls contractor.
9. Verify final system conditions as follows:

a. Re-measure and confirm that minimum outdoor, return, and relief airflows are within design. Readjust to match design if necessary.
b. Re-measure and confirm that total airflow is within design.
c. Re-measure final fan operating data, rpms, volts, amps, and static profile.
d. Mark final settings.
e. Test system in economizer mode. Verify proper operation and adjust if necessary. Measure and record all operating data.
f. Verify tracking between supply and return fans.

B. To obtain scheduled outside air (OA) flow rates for AHUs with Variable Frequency Drives: Balance OA and RA dampers at the AHUs to get scheduled OA Flow CFM at fan speeds of 100%, 50%, and 30%. Coordinate OA and RA dampers with BAS Controls Contractor.

3.7 GENERAL PROCEDURES FOR HYDRONIC SYSTEMS

A. Prepare test reports for pumps, coils, and heat exchangers. Obtain approved submittals and manufacturer-recommended testing procedures. Crosscheck the summation of required coil and heat exchanger flow rates with pump design flow rate.

B. Prepare schematic diagrams of systems' "as-built" piping layouts.

C. In addition to requirements in "Preparation" Article, prepare hydronic systems for testing and balancing as follows:

1. Check liquid level in expansion tank.
2. Check highest vent for adequate pressure.
3. Check flow-control valves for proper position.
4. Locate start-stop and disconnect switches, electrical interlocks, and motor starters.
5. Verify that motor starters are equipped with properly sized thermal protection.
6. Check that air has been purged from the system.

3.8 PROCEDURES FOR PRIMARY-SECONDARY HYDRONIC SYSTEMS

A. Balance the primary circuit flow first.

B. Balance the secondary circuits after the primary circuits are complete.

C. Adjust pumps to deliver total design gpm.

1. Measure total water flow.

a. Position valves for full flow through coils.
b. Measure flow by main flow meter, if installed.
c. If main flow meter is not installed, determine flow by pump TDH or exchanger pressure drop.

2. Measure pump TDH as follows:

a. Measure discharge pressure directly at the pump outlet flange or in discharge pipe prior to any valves.
b. Measure inlet pressure directly at the pump inlet flange or in suction pipe prior to any valves or strainers.
c. Convert pressure to head and correct for differences in gage heights.
d. Verify pump impeller size by measuring the TDH with the discharge valve closed. Note the point on manufacturer's pump curve at zero flow and verify that the pump has the intended impeller size.
e. With valves open, read pump TDH. Adjust pump discharge valve until design water flow is achieved.

3. Monitor motor performance during procedures and do not operate motor in an overloaded condition.

D. Adjust flow-measuring devices installed in mains and branches to design water flows.

1. Measure flow in main and branch pipes.
2. Adjust main and branch balance valves for design flow.
3. Re-measure each main and branch after all have been adjusted.

E. Adjust flow-measuring devices installed at terminals for each space to design water flows.

1. Measure flow at terminals.
2. Adjust each terminal to design flow.
3. Re-measure each terminal after it is adjusted.
4. Position control valves to bypass the coil and adjust the bypass valve to maintain design flow.
5. Perform temperature tests after flows have been balanced.

F. For systems with pressure-independent valves at terminals:

1. Measure differential pressure and verify that it is within manufacturer's specified range.
2. Perform temperature tests after flows have been verified.

G. For systems without pressure-independent valves or flow-measuring devices at terminals:

1. Measure and balance coils by either coil pressure drop or temperature method.
2. If balanced by coil pressure drop, perform temperature tests after flows have been verified.

H. Verify final system conditions as follows:

1. Re-measure and confirm that total water flow is within design.
2. Re-measure final pumps' operating data, TDH, volts, amps, and static profile.

3. Mark final settings.

I. Verify that memory stops have been set.

3.9 PROCEDURES FOR MOTORS

A. Motors 1/2 HP and Larger: Test at final balanced conditions and record the following data:

1. Manufacturer's name, model number, and serial number.
2. Motor horsepower rating.
3. Motor rpm.
4. Phase and hertz.
5. Nameplate and measured voltage, each phase.
6. Nameplate and measured amperage, each phase.
7. Starter size and thermal-protection-element rating.
8. Service factor and frame size.

B. Motors Driven by Variable-Frequency Controllers: Test manual bypass of controller to prove proper operation.

1. Verify VFD controller is keeping correct time/date and maintains it after restoration of power outage.
2. Reduction in VFD speed from 60hz is to be the initial means of balancing systems. It is not acceptable to operate VFD at 60hz (or higher) and then balance system by throttling valves or dampers. Throttle flow(s) to outlet devices (e.g. coils, air devices, etc.) only after VFD has been reduced to lowest speed required to provide design flow.
   a. Set the maximum required VFD speed at VFD controller, and report speed in final TAB report.

3. Test manual bypass of controller to prove proper operation.

3.10 PROCEDURES FOR CHILLERS

A. Balance water flow through each evaporator to within specified tolerances of indicated flow with all pumps operating. With only one chiller operating in a multiple chiller installation, do not exceed the flow for the maximum tube velocity recommended by the chiller manufacturer. Measure and record the following data with each chiller operating at design conditions:

1. Evaporator-water entering and leaving temperatures, pressure drop, and water flow.
2. Evaporator and condenser refrigerant temperatures and pressures, using instruments furnished by chiller manufacturer.
3. Kilowatt input if factory-installed instrumentation is furnished for measuring kilowatts.
4. Capacity: Calculate in tons of cooling.
5. For air-cooled chillers, verify condenser-fan rotation and record fan and motor data including number of fans.
6. Verify flow meter accuracy at expected max flow rate, expected min flow rate, and midway between. Include findings in final report.

3.11 PROCEDURES FOR SPACE PRESSURIZATION MEASUREMENTS AND ADJUSTMENTS

A. Before testing for space pressurization, observe the space to verify the integrity of the space boundaries. Verify that windows and doors are closed and applicable safing, gaskets, and sealants are installed. Report deficiencies and postpone testing until after the reported deficiencies are corrected.

B. Measure, adjust, and record the pressurization of each room, each zone, and each building by adjusting the supply, return, and exhaust airflows to achieve the indicated conditions.

C. Measure space pressure differential where pressure is used as the design criteria, and measure airflow differential where differential airflow is used as the design criteria for space pressurization.
   1. For pressure measurements, measure and record the pressure difference between the intended spaces at the door with all doors in the space closed. Record the high-pressure side, low-pressure side, and pressure difference between each adjacent space.
   2. For applications with cascading levels of space pressurization, begin in the most critical space and work to the least critical space.
   3. Test room pressurization first, then zones, and finish with building pressurization.

D. To achieve indicated pressurization, set the supply airflow to the indicated conditions and adjust the exhaust and return airflow to achieve the indicated pressure or airflow difference.

E. For spaces with pressurization being monitored and controlled automatically, observe and adjust the controls to achieve the desired set point.
   1. Compare the values of the measurements taken to the measured values of the control system instruments and report findings.
   2. Check the repeatability of the controls by successive tests designed to temporarily alter the ability to achieve space pressurization. Test overpressurization and underpressurization, and observe and report on the system's ability to revert to the set point.
   3. For spaces served by variable-air-volume supply and exhaust systems, measure space pressurization at indicated airflow and minimum airflow conditions.

F. In spaces that employ multiple modes of operation, such as normal mode and emergency mode or occupied mode and unoccupied mode, measure, adjust, and record data for each operating mode.

G. Record indicated conditions and corresponding initial and final measurements. Report deficiencies.

3.12 PROCEDURES FOR INDOOR-AIR QUALITY MEASUREMENTS

A. After air balancing is complete and with HVAC systems operating at indicated conditions, perform indoor-air quality testing.

B. Observe and record the following conditions for each HVAC system:
   1. The distance between the outside-air intake and the closest exhaust fan discharge, flue termination, or vent termination.

2. Specified filters are installed. Check for leakage around filters.
3. Cooling coil drain pans have a positive slope to drain.
4. Cooling coil condensate drain trap maintains an air seal.
5. Evidence of water damage.
6. Insulation in contact with the supply, return, and outside air is dry and clean.

3.13 PROCEDURES FOR HEAT-TRANSFER COILS

A. Measure, adjust, and record the following data **for each cooling coil**:
   1. Dry-bulb temperature of entering and leaving air.
   2. Wet-bulb temperature of entering and leaving air for cooling coils.
   3. Airflow.
   4. Air pressure drop.
   5. For Hydronic units:
      a. Entering- and leaving-water temperature at Hydronic units.
      b. Water flow rate.
      c. Water pressure drop.
   6. Units 6 tons and less: Overall readings (upstream of filters, fan suction, fan discharge) are to be taken for all units. A full test of air pressure drops across every single component of the system (i.e. filters, coils) need be taken only for a representative sample of units as follows:

Qty of units Installed	Full Testing
1-10	1
10-20	2
20-30	3
31+	4

      a. Units larger than 6 tons: Readings across **all system components** are to be taken for all units larger than 6 tons.

B. Where a unit has multiple coils (e.g. main cooling coil and a reheat coil), take and record data for each coil under conditions as close as possible to intended design operation (e.g., with cooling coil producing control-system sub-cooling setpoint, reheat coil producing control-system supply temperature setpoint).

3.14 PROCEDURES FOR HEAT-TRANSFER COILS

A. Measure, adjust, and record the following data for each electric heating coil:

   1. Nameplate data.
   2. Airflow.
   3. Entering- and leaving-air temperature at full load.
   4. Voltage and amperage input of each phase at full load.
   5. Calculated kilowatt at full load.
   6. Fuse or circuit-breaker rating for overload protection.

3.15 DUCT LEAKAGE TESTS

A. Coordinate with mechanical subcontractor for duct leakage testing **when such testing is specified** (reference specifications section 233113).

B. Verify that Installer's plan for testing meets specified requirements.

C. Witness the duct pressure testing performed by Installer.

D. Verify that proper test methods are used and that leakage rates are within specified tolerances.

E. Provide a summary report to Engineer of duct leakage testing. Report test results, and any deficiencies observed. Include in report marked-up plans indicating which sections of duct were tested.

3.16 TOLERANCES

A. Set HVAC system's airflow rates and water flow rates within the following tolerances:

1. Supply, Return, and Exhaust Fans and Equipment with Fans: Plus or minus 10 percent.
2. Air Outlets and Inlets: Plus or minus 10 percent.

B. Maintaining pressure relationships as designed shall have priority over the tolerances specified above.

3.17 CONTROLS VERIFICATION

A. Measure accuracy of all sensors (temperature, humidity, dewpoint, pressure, carbon dioxide (CO2), etc.) associated with air conditioning systems and the Building Automation System (BAS).

B. In conjunction with system balancing, perform the following:

1. Temperature, pressure, CO2, relative humidity (RH) sensors.
    a. Obtain submittal information regarding manufacturer's claimed sensor accuracy.
    b. Verify that all sensors are reading within accuracy limits of manufacturer's claimed sensor accuracy, or accuracy required in specifications, whichever is the more stringent. This includes sensors supplied by controls company, those installed in spaces, in ductwork, in piping, and those which come integral to HVAC equipment manufacturer or supplied by HVAC equipment manufacturer. Use measuring instrument, calibrated within past year, of higher accuracy than sensor being tested.
        1) Accuracy of temperature and RH sensors may be verified at one single reading, i.e. the temperature or RH of the room or substance at the time the sensor is being checked.
        2) Verify accuracy of pressure sensors at no flow condition (i.e. unit off), and when unit is operating.
        3) Verify two-point accuracy of CO2 sensors: 1, at Low end, where room has been unoccupied for a long period of time; CO2 should be near 400ppm;

and 2, at High end, a time when room is or has been occupied such that CO2 has risen to 700ppm or more. (This second measurement may need to take place after building is occupied, i.e. during the 90 day follow up visit. For rooms which are 'permanently' unoccupied, High end reading need not be taken.)

c. Verify sensors are installed and in locations appropriately for intended use; list observations regarding sensors installation which may impact satisfactory operation of HVAC systems. (For examples: verify that room temperature sensors are installed in a location appropriate for space (e.g., not on exterior wall, not exposed to sun, not above heat generating equipment, etc.); verify readings of unit return air sensors are not impacted by outside air intake.)

2. Verify the operation of valves, dampers, and associated actuators.
   a. Verify damper leakage is in accordance with submitted performance and does not prevent system operation in accordance with design intent.
   b. Verify that leakage through valves is no greater than submitted leakage rate.

3. Verify that controlled devices are properly installed and connected to correct controller.
4. Verify that controlled devices travel freely and are in position indicated by controller: open, closed, or modulating.

C. Perform sensor accuracy testing promptly after sensors are installed and communicating accurately with BAS.

3.18 REPORT ON SENSOR ACCURACY

A. Prepare a stand-alone report on sensor accuracy findings, as detailed in 'CONTROLS VERIFICATION' above. Submit to General Contractor, Mechanical Contractor, Architect, Engineer, and Commissioning Agent (**CxA**).

1. Report must be delivered promptly after sensor testing is complete in order that BAS contractor and/or equipment suppliers may replace faulty sensors before commissioning functional testing begins.

B. List every sensor tested, and indicate which room or equipment item it is associated with. List:

1. Specified or submitted sensor accuracy, whichever is more stringent.
2. Initial sensor reading re BAS or equipment controller.
3. Sensor reading re TAB company's calibrated instrument.
4. Required Offset, if sensor is within specified/submitted accuracy.
   a. Any sensors which require an "offset" by controller which is greater than required accuracy will be replaced by supplier.

C. At direction of Engineer, BAS and/or HVAC systems providers will be required to replace or calibrate sensors based upon this TAB sensors accuracy report. Subsequent to such replacement and calibration, re-measure accuracy of those sensors which were calibrated or replaced and submit report per directions above.

D. TAB may create table formatting to display required data. A sample proposed format provided below for several types of sensors.

Required Sensor Accuracy
Space temperature sensors: ±0.75deg F
Space RH sensors: ±2%
Space CO2 sensors: ±30 PPM + 3% of reading
etc….

CO2 Sensor Low-Side Readings

Location	Sensor Reading	TAB Reading	Required Offset	Comment
AHU-310 space	340ppm	407ppm	-	REPLACE
AHU-311 space	388ppm	410ppm	+22ppm	
AHU-Café ret air	290ppm	425ppm	-	REPLACE

Space Temperature Sensor Readings

Location	Sensor Reading	TAB Reading	Required Offset	Comment
Rm 123	73.4F	73.6F	0F	
Rm 124	73.0F	74.3F	1.3F	

Return Air Temperature Sensor Readings

Location	Sensor Reading	TAB Reading	Required Offset	Comment
RTU-310	69.5F	74.5F	-	REPLACE
RTU-311	70.5F	71.5F	+1.0F	

3.20 PROCEDURES FOR INDOOR-AIR QUALITY MEASUREMENTS

A. After air balancing is complete and with HVAC systems operating at indicated conditions, perform indoor-air quality testing.

B. Observe and record the following conditions for each HVAC system:

1. The distance between the outside-air intake and the closest exhaust fan discharge, flue termination, or vent termination.
2. Specified filters are installed. Check for leakage around filters.
3. Cooling coil drain pans have a positive slope to drain.
4. Cooling coil condensate drain trap maintains an air seal.
5. Evidence of water damage.
6. Insulation in contact with the supply, return, and outside air is dry and clean.

3.21 PROGRESS REPORTING

A. Initial Construction-Phase Report: Based on examination of the Contract Documents as specified in "Examination" Article, prepare a report on the adequacy of design for systems balancing devices. Recommend changes and additions to systems balancing devices to facilitate proper performance measuring and balancing. Recommend changes and additions to HVAC systems and general construction to allow access for performance measuring and balancing devices.

B. Status Reports: Prepare progress reports to describe completed procedures, procedures in progress, and scheduled procedures. Include a list of deficiencies and problems found in systems being tested and balanced. Prepare a separate report for each system and each building floor for systems serving multiple floors.

C. **Provide copy of reports to Contractor, Engineer, and Commissioning Agent.**

3.22 FINAL REPORT

A. Format

1. **Report must be submitted in digital electronic format, in a fully searchable .pdf file.** Reports which are non-searchable or which contain scans of paper copies will be returned un-reviewed.
2. Bookmark report to indicate major sections and individual HVAC units.

B. General Report Data: In addition to form titles and entries, include the following data in the final report, as applicable:

1. Title page.
   a. Date the report is submitted must be on cover page.
   b. Project name.
   c. Project location.
   d. Name and address of General Contractor, Mechanical Contractor (if TAB is subcontractor to Mechanical), and TAB Contractor.
   e. Name and contact information for TAB Contractor's representative.
   f. Architect's and Engineer's name and address.

2. Table of Contents.

3. Certifications.
   a. Certificate of TAB certifying agency.
   b. Work Guaranty.
   c. Signature of TAB supervisor who certifies the report.

4. Instrument Calibration Reports:
   a. Instrument type and make.
   b. Dates of use.
   c. Dates of calibration.
5. List of abbreviations used in report.
6. Nomenclature and data sheets for each item of equipment, including manufacturer's name, type, size. Include, at minimum:

   a. Fan curves.
   b. Pump curves.
   c. Manufacturers' test data.
   d. Field test reports prepared by system and equipment installers.
   e. Other information relative to equipment performance; do not include Shop Drawings and Product Data.

C. Final Report Contents: In addition to items listed above, include:

1. Original test report of sensor accuracy testing.
2. Duct leakage test report.
3. Summary of observations on proper drainage of condensate drain pans for every item of equipment having a condensate drainage system.

    a. Proper pan slope and pan condensate evacuation.
    b. Adequate condensate trap depth versus static requirement.
    c. Adequate slope and lack of 'bellies' in condensate pipe drainage system.
    d. Proper pumped condensate operation.

4. Field observations list of conditions of filters (verify construction filters are removed and final filters are clean) and filter racks.
5. Field measurements and observations regarding leakage of outdoor air and control air dampers.
6. Certified field-report data for each balanced system, including specified versus final performance, notable characteristics of systems, description of system operation sequence if it varies from the Contract Documents
7. Layouts of air distribution systems from construction as-built drawings.

    a. Number all air devices and systems referenced in report body.
    b. Scans of paper drawings are not acceptable. Hand-written notes for numbering devices, duct runs, etc., are permissible, but the basic floor plans and duct / piping layouts, equipment and devices locations, etc., must be from original pdf files.
    c. Indicate duct, outlet, and inlet sizes, pipe and valve sizes and locations, locations of major equipment items such as air handlers, fans, air terminal units, pumps, etc., balancing stations.

8. Summary of Deficiencies:
    a. Report must include a comprehensive summary page listing all equipment / systems which were not balanced to within specified range.
    b. For each instance where system or individual component of a system is not balanced to within specified range, provide a clear explanation of why it cannot be so balanced, and propose remedial steps.
    c. Disclaimers, miscellaneous informational factoids, explanatory text concerning methodology, and other information not specifically relevant to actual deficiencies may be included towards the end of report, but are not to be included on the Summary Of Deficiencies page.

9. Summary Of Critical Measurements and Setpoints:
    a. Provide a table which summarizes critical measurements and settings for all HVAC equipment 1HP and larger. Sample tables provided below for pumps and air-side systems showing minimum required information:

Unit Name	Design CFM	Measured CFM	Design ESP	Measured ESP	Tap or VFD Speed Setting	Req'd Static Stpt
RTU-123	1,000	990	1.50"	1.10"	55%	NA
DOAS-1	2,500	2,475	1.00"	0.40"	NA	0.15"

Unit	Design	Measured	Design	Measured	Tap or Speed	Req'd

Name	GPM	GPM	Head	Head	Setting	dP Stpt*
CHWP-1	250	270	65ft	65ft	55%	15psi
HW-1	150	160	40ft	42ft	40%	12psi

* Individual system/unit.

a. Nameplate, design, and measured performance as described in this specification.
   1) The intent of TAB measurements is to prove unit performs in accordance with manufacturer's specified and submitted data. Change setpoints as required to achieve this result. (For example in a dedicated outside air unit with hot gas reheat, set the cooling coil leaving air temperature setpoint and the unit leaving air temperature setpoint to achieve cooling coil design.) Clearly indicate in report the setpoints in effect when measurements were taken.

b. Include fan and pump curves for units 1.5HP and larger.

c. For units with VFD speed control: Indicate required VFD speed and whether VFD was speed-limited in its controller settings.

11. Floor plans (as-built) showing HVAC unit locations, duct layouts, air terminal devices numbered to match measured data points.
    a. Show location of air-side pressure sensors, differential or straight pressure, where such sensors are used in control
13. List of Abbreviations.
14. Checklist of HVAC unit inspections: **Sample checklists below.** Include comments as required to explain anomalies or deficiencies. (Engineer will provide sample file in Excel format upon request.)

Unit Inspection Checklist

DX Units	**RTU-1**	**RTU-2**	**RTU-2**
Condensate drain pan is clean			
Condensate pan fully draining, no ponding in pan			
No excessive damper air leakage			
No air leakage @ cabinet, doors, duct connections			
Final air filters installed and clean			
Final filters of type/MERV rating specified			
Coil fins undamaged and/or combed straight			
Fan free of vibration, rotating in correct direction			
Unit interior cleaned and vacuumed			
Access doors open fully & freely			

A. System Diagrams: Include schematic layouts of air and hydronic distribution systems. Present each system with single-line diagram and include the following:

1. Quantities of outdoor, supply, return, and exhaust airflows.
2. Water and steam flow rates.
3. Duct, outlet, and inlet sizes.
4. Pipe and valve sizes and locations.
5. Terminal units.
6. Balancing stations.
7. Position of balancing devices.

B. Air-Handling-Unit Test Reports: For air-handling units with coils, include the following:

1. Unit Data:

    a. Unit identification.
    b. Location.
    c. Make and type.
    d. Model number and unit size.
    e. Manufacturer's serial number.
    f. Unit arrangement and class.
    g. Discharge arrangement.
    h. Sheave make, size in inches, and bore.
    i. Center-to-center dimensions of sheave and amount of adjustments in inches.
    j. Number, make, and size of belts.
    k. Number, type, and size of filters.

2. Motor Data:

    a. Motor make, and frame type and size.
    b. Horsepower and rpm.
    c. Volts, phase, and hertz.
    d. Full-load amperage and service factor.
    e. Sheave make, size in inches, and bore.
    f. Center-to-center dimensions of sheave and amount of adjustments in inches.

3. Test Data (Indicated and Actual Values):

    a. Total airflow rate in cfm.
    b. Total system static pressure in inches wg.
    c. Fan rpm.
    d. Discharge static pressure in inches wg.
    e. Filter static-pressure differential in inches wg.
    f. Cooling-coil static-pressure differential in inches wg.
    g. Heating-coil static-pressure differential in inches wg.
    h. Outdoor airflow in cfm.
    i. Return airflow in cfm.
    j. Outdoor-air damper position.
    k. Return-air damper position.
    l. Vortex damper position.
    m. Settings for outdoor-, return-air dampers.

1) Air handling units *may* be designed to operate with fan varying from high to low speed.
2) For such units, TAB must measure required outside air damper (& return, where applicable) position for intake of design ventilation air not only at full fan speed, but at low fan speed as well. Report results in final TAB report.
3) Convey required damper positions to BAS contractor as soon as they are known, prior to submission of final TAB report.

C. Packaged Chiller Reports: For each chiller, include the following:

1. Unit Data: Include the following:

   a. Unit identification.
   b. Make and model number.
   c. Manufacturer's serial number.
   d. Refrigerant type and capacity in lbs.
   e. Starter type and size.
   f. Starter thermal protection size.

2. Condenser Test Data: Include design and actual values for the following:

   a. Refrigerant pressure in psig.
   b. Refrigerant temperature in deg F.
   c. Entering-water temperature in deg F.
   d. Leaving-water temperature in deg F.
   e. Entering-water pressure in feet of head or psig.
   f. Water pressure differential in feet of head or psig.

3. Evaporator Test Reports: Include design and actual values for the following:

   a. Refrigerant pressure in psig.
   b. Refrigerant temperature in deg F.
   c. Entering-water temperature in deg F.
   d. Leaving-water temperature in deg F.
   e. Entering-water pressure in feet of head or psig.
   f. Water pressure differential in feet of head or psig.

4. Compressor Test Data: Include design and actual values for the following:

   a. Make and model number.
   b. Manufacturer's serial number.
   c. Suction pressure in psig.
   d. Suction temperature in deg F.
   e. Discharge pressure in psig.
   f. Discharge temperature in deg F.
   g. Oil pressure in psig.
   h. Oil temperature in deg F.
   i. Voltage at each connection.
   j. Amperage for each phase.
   k. The kW input.
   l. Crankcase heater kW.

m. Chilled water control set point in deg F.
n. Condenser water control set point in deg F.
o. Refrigerant low-pressure-cutoff set point in psig.
p. Refrigerant high-pressure-cutoff set point in psig.

5. Refrigerant Test Data: Include design and actual values for the following:

a. Oil level.
b. Refrigerant level.
c. Relief valve setting in psig.
d. Unloader set points in psig.
e. Percentage of cylinders unloaded.
f. Bearing temperatures in deg F.
g. Vane position.
h. Low-temperature-cutoff set point in deg F.

D. Pump Test Reports: Calculate impeller size by plotting the shutoff head on pump curves and include the following:

1. Unit Data:
a. Unit identification.
b. Location.
c. Service.
d. Make and size.
e. Model number and serial number.
f. Water flow rate in gpm.
g. Water pressure differential in feet of head or psig.
h. Required net positive suction head in feet of head or psig.
i. Pump rpm.
j. Impeller diameter in inches.
k. Motor make and frame size.
l. Motor horsepower and rpm.
m. Voltage at each connection.
n. Amperage for each phase.
o. Full-load amperage and service factor.
p. Seal type.

2. Test Data (Indicated and Actual Values):
a. Static head in feet of head or psig.
b. Pump shutoff pressure in feet of head or psig.
c. Actual impeller size in inches.
d. Full-open flow rate in gpm.
e. Full-open pressure in feet of head or psig.
f. Final discharge pressure in feet of head or psig.
g. Final suction pressure in feet of head or psig.
h. Final total pressure in feet of head or psig.
i. Final water flow rate in gpm.
j. Voltage at each connection.
k. Amperage for each phase.

E. Fan Test Reports: For supply, return, and exhaust fans, include the following:

1. Fan Data:

    a. System identification.
    b. Location.
    c. Make and type.
    d. Model number and size.
    e. Manufacturer's serial number.
    f. Arrangement and class.
    g. Sheave make, size in inches, and bore.
    h. Center-to-center dimensions of sheave and amount of adjustments in inches.

2. Motor Data:

    a. Motor make, and frame type and size.
    b. Horsepower and rpm.
    c. Volts, phase, and hertz.
    d. Full-load amperage and service factor.
    e. Sheave make, size in inches, and bore.
    f. Center-to-center dimensions of sheave, and amount of adjustments in inches.
    g. Number, make, and size of belts.

3. Test Data (Indicated and Actual Values):

    a. Total airflow rate in cfm.
    b. Total system static pressure in inches wg.
    c. Fan rpm.
    d. Discharge static pressure in inches wg.
    e. Suction static pressure in inches wg.

F. Round, Flat-Oval, and Rectangular Duct Traverse Reports: Include a diagram with a grid representing the duct cross-section and record the following:

1. Report Data:

    a. System and air-handling-unit number.
    b. Location and zone.
    c. Traverse air temperature in deg F.
    d. Duct static pressure in inches wg.
    e. Duct size in inches.
    f. Duct area in sq. ft..
    g. Indicated airflow rate in cfm.
    h. Indicated velocity in fpm.
    i. Actual airflow rate in cfm.
    j. Actual average velocity in fpm.
    k. Barometric pressure in psig.

G. RTU/Air-Handling-Unit Test Reports: For air-handling units with coils, include the following:

1. Unit Data:
    a. Unit identification.
    b. Location.

c. Make and type.
d. Model number and unit size.
e. Manufacturer's serial number.
f. Unit arrangement and class.
g. Discharge arrangement.
h. Sheave make, size in inches, and bore.
i. Center-to-center dimensions of sheave and amount of adjustments in inches.
j. Number, make, and size of belts.
k. Number, type, and size of filters.

2. Motor Data:
   a. Motor make, and frame type and size.
   b. Horsepower and rpm.
   c. Volts, phase, and hertz.
   d. Full-load amperage and service factor.
   e. Sheave make, size in inches, and bore.
   f. Center-to-center dimensions of sheave and amount of adjustments in inches.

3. Test Data (Indicated and Actual Values):
   a. Total airflow rate in cfm.
   b. Total system static pressure in inches wg.
   c. Fan rpm.
   d. Discharge static pressure in inches wg.
   e. Filter static-pressure differential in inches wg.
   f. Cooling-coil static-pressure differential in inches wg.
   g. Heating-coil static-pressure differential in inches wg.
   h. Outdoor airflow in cfm.
   i. Return airflow in cfm.
   j. Outdoor-air damper position.
   k. Return-air damper position.
   l. Settings for outdoor-, return-, and exhaust-air dampers.
      1) Air handling units / RTU's *may* be designed to operate with fan varying from high to low speed depending upon compressor operation.
      2) For such units, TAB must measure required outside air damper (& return, where applicable) position for intake of design ventilation air not only at full fan speed, but at low fan speed as well. Report results in final TAB report.
      3) Convey required damper positions to BAS contractor as soon as they are known, prior to submission of final TAB report.

H. VFD-served equipment:

1. A pump or fan served by a VFD must be balanced for maximum energy efficiency by limiting maximum speed via the VFD ("Maximum Allowed Speed"). It is not acceptable to operate VFD at 60hz (or higher) and then balance system by throttling valves or dampers.
2. VFD Maximum Allowed Speed is to be determined such that design flow is met in the most critical (highest pressure drop) flow path with no throttling in that path. Other flow paths may then be balanced by throttling as needed with VFD at Maximum Allowed Speed.
3. VFD Maximum Allowed Speed shall be programmed at the VFD controller or AHU/RTU.

I. Indoor-Air Quality Measurement Reports for Each HVAC System:
   1. HVAC system designation.
   2. Date and time of test.
   3. Outdoor temperature, relative humidity, wind speed, and wind direction at start of test.
   4. Room number or similar description for each location.
   5. Measurements at each location.
   6. Observed deficiencies.

3.23 ADDITIONAL TESTS

A. Within 90 days of completing TAB, re-visit site to perform additional TAB measurements to verify that balanced conditions are being maintained throughout and to correct unusual conditions.

   1. Consult with Engineer prior to site visit to develop a measurement plan, and determine which systems, units, or locations need particular attention.
   2. Submit report of findings and modifications made.

B. Seasonal Periods: If initial TAB procedures were not performed during near-peak summer and winter conditions, perform additional TAB during near-peak summer and winter conditions.

3.24 SUMMARY OF SYSTEMS SCOPE WORK FOR TESTING AND BALANCING

A. The following systems are to be included in scope of TAB work for this project:
   1. Air distribution systems (ducts, dampers, outlets, etc.)
   2. Hydronic distribution systems (piping, valves, etc.)
   3. Chiller plants (primary and secondary chilled water pumps, chillers)
   4. Hydronic DOAS and RTUs
   5. Exhaust fans

END OF SECTION 230593

SECTION 230713 - DUCT INSULATION

PART 1 - GENERAL

1.1 RELATED DOCUMENTS

A. Drawings and general provisions of the Contract, including General and Supplementary Conditions and Division 01 Specification Sections, apply to this Section.

1.2 SUMMARY

A. Section includes insulating the following duct services:

1. Indoor, concealed supply and outdoor air.
2. Indoor, concealed return located in unconditioned space.
3. Indoor, exposed ductwork.

B. Related Sections:
1. Section 230719 "HVAC Piping Insulation."
2. Section 233113 "Metal Ducts" for duct liners.

1.3 ACTION SUBMITTALS

A. Product Data: For each type of product indicated. Include thermal conductivity, water-vapor permeance thickness, and jackets (both factory- and field-applied if any).

B. Shop Drawings: Include plans, elevations, sections, details, and attachments to other work.

1. Detail application of protective shields, saddles, and inserts at hangers for each type of insulation and hanger.
2. Detail insulation application at elbows, fittings, dampers, specialties and flanges for each type of insulation.
3. Detail application of field-applied jackets.
4. Detail application at linkages of control devices.

1.4 INFORMATIONAL SUBMITTALS

A. Qualification Data: For qualified Installer.

B. Field quality-control reports.

1.5 QUALITY ASSURANCE

A. Surface-Burning Characteristics: For insulation and related materials, as determined by testing identical products according to ASTM E 84, by a testing agency acceptable to authorities having jurisdiction. Factory label insulation and jacket materials and adhesive, mastic, tapes, and cement material containers, with appropriate markings of applicable testing agency.

1. Insulation Installed Indoors: Flame-spread index of 25 or less, and smoke-developed index of 50 or less.
2. Insulation Installed Outdoors: Flame-spread index of 75 or less, and smoke-developed index of 150 or less.

1.6 DELIVERY, STORAGE, AND HANDLING

A. Packaging: Insulation material containers shall be marked by manufacturer with appropriate ASTM standard designation, type and grade, and maximum use temperature.

1.7 COORDINATION

A. Coordinate sizes and locations of supports, hangers, and insulation shields specified in Section 230529 "Hangers and Supports for HVAC Piping and Equipment."

B. Coordinate clearance requirements with duct Installer for duct insulation application. Before preparing ductwork Shop Drawings, establish and maintain clearance requirements for installation of insulation and field-applied jackets and finishes and for space required for maintenance.

C. Coordinate installation and testing of heat tracing.

1.8 SCHEDULING

A. Schedule insulation application after pressure testing systems and, where required, after installing and testing heat tracing. Insulation application may begin on segments that have satisfactory test results.

PART 2 - PRODUCTS

2.1 MANUFACTURERS

A. Manufacturers: Subject to compliance with requirements, manufacturers offering products that may be incorporated into the Work include, and are limited to, the following:
   1. Mineral-Fiber Insulation:
      a. CertainTeed
      b. Manson.
      c. Knauf FiberGlass GmbH.
      d. Owens-Corning Fiberglas Corp.
      e. Schuller International, Inc.

2.2 INSULATION MATERIALS

A. Comply with requirements in "Duct Insulation Schedule, General," "Indoor Duct and Plenum Insulation Schedule," and "Aboveground, Outdoor Duct and Plenum Insulation Schedule" articles for where insulating materials shall be applied.

B. Products shall not contain asbestos, lead, mercury, or mercury compounds.

C. Products that come in contact with stainless steel shall have a leachable chloride content of less than 50 ppm when tested according to ASTM C 871.

D. Insulation materials for use on austenitic stainless steel shall be qualified as acceptable according to ASTM C 795.

E. Foam insulation materials shall not use CFC or HCFC blowing agents in the manufacturing process.

F. Flexible Elastomeric Insulation: Closed-cell, sponge- or expanded-rubber materials. Comply with ASTM C 534, Type II for sheet materials.

G. Mineral-Fiber Blanket Insulation: Mineral or glass fibers bonded with a thermosetting resin. Comply with ASTM C 553, Type II and ASTM C 1290. Factory-applied jacket requirements are specified in "Factory-Applied Jackets" Article.

2.3 ADHESIVES

A. Materials shall be compatible with insulation materials, jackets, and substrates and for bonding insulation to itself and to surfaces to be insulated unless otherwise indicated.

B. Mineral-Fiber Adhesive: Comply with MIL-A-3316C, Class 2, Grade A.

1. For indoor applications, adhesive shall have a VOC content of 80 g/L or less when calculated according to 40 CFR 59, Subpart D (EPA Method 24).
2. Adhesive shall comply with the testing and product requirements of the California Department of Health Services' "Standard Practice for the Testing of Volatile Organic Emissions from Various Sources Using Small-Scale Environmental Chambers."

C. ASJ Adhesive, and FSK Jacket Adhesive: Comply with MIL-A-3316C, Class 2, Grade A for bonding insulation jacket lap seams and joints.

1. For indoor applications, adhesive shall have a VOC content of 50 g/L or less when calculated according to 40 CFR 59, Subpart D (EPA Method 24).
2. Adhesive shall comply with the testing and product requirements of the California Department of Health Services' "Standard Practice for the Testing of Volatile Organic Emissions from Various Sources Using Small-Scale Environmental Chambers."

2.4 MASTICS

A. Materials shall be compatible with insulation materials, jackets, and substrates; comply with MIL-PRF-19565C, Type II.

1. For indoor applications, use mastics that have a VOC content of 50 g/L or less when calculated according to 40 CFR 59, Subpart D (EPA Method 24).

2.5 LAGGING ADHESIVES

A. Description: Comply with MIL-A-3316C, Class I, Grade A and shall be compatible with insulation materials, jackets, and substrates.

1. For indoor applications, use lagging adhesives that have a VOC content of 50 g/L or less when calculated according to 40 CFR 59, Subpart D (EPA Method 24).
2. Fire-resistant, water-based lagging adhesive and coating for use indoors to adhere fire-resistant lagging cloths over duct insulation.
3. Service Temperature Range: 0 to plus 180 deg F.
4. Color: White.

2.6 SEALANTS

A. FSK and Metal Jacket Flashing Sealants:
1. Materials shall be compatible with insulation materials, jackets, and substrates.
2. Fire- and water-resistant, flexible, elastomeric sealant.
3. Service Temperature Range: Minus 40 to plus 250 deg F.
4. Color: Aluminum.
5. For indoor applications, sealants shall have a VOC content of 420 g/L or less when calculated according to 40 CFR 59, Subpart D (EPA Method 24).
6. Sealants shall comply with the testing and product requirements of the California Department of Health Services' "Standard Practice for the Testing of Volatile Organic Emissions from Various Sources Using Small-Scale Environmental Chambers."

2.7 FACTORY-APPLIED JACKETS

A. Insulation system schedules indicate factory-applied jackets on various applications. When factory-applied jackets are indicated, comply with the following:
1. FSK Jacket: Aluminum-foil, fiberglass-reinforced scrim with kraft-paper backing; complying with ASTM C 1136, Type II.

2.8 FIELD-APPLIED JACKETS

A. Field-applied jackets shall comply with ASTM C 921, Type I, unless otherwise indicated.

B. FSK Jacket: Aluminum-foil-face, fiberglass-reinforced scrim with kraft-paper backing.

2.9 TAPES

A. FSK Tape: Foil-face, vapor-retarder tape matching factory-applied jacket with acrylic adhesive; complying with ASTM C 1136.
1. Width: 4 inches.
2. Thickness: 6.5 mils.
3. Adhesion: 90 ounces force/inch in width.
4. Elongation: 2 percent.
5. Tensile Strength: 40 lbf/inch in width.

6. FSK Tape Disks and Squares: Precut disks or squares of FSK tape.

2.10 SECUREMENTS

A. Bands:

1. Stainless Steel: ASTM A 167 or ASTM A 240/A 240M, Type 304 or Type 316; 0.015 inch thick, 3/4 inch wide.

B. Insulation Pins and Hangers:

1. Capacitor-Discharge-Weld Pins: Copper- or zinc-coated steel pin, fully annealed for capacitor-discharge welding, 0.135-inch- diameter shank, length to suit depth of insulation indicated.

2. Insulation-Retaining Washers: Self-locking washers formed from 0.016-inch-thick, galvanized-steel sheet, with beveled edge sized as required to hold insulation securely in place but not less than 1-1/2 inches in diameter.
   a. Protect ends with capped self-locking washers incorporating a spring steel insert to ensure permanent retention of cap in exposed locations.

C. Staples: Outward-clinching insulation staples, nominal 3/4-inch-wide, stainless steel or Monel.

D. Wire: 0.062-inch soft-annealed, stainless steel.

PART 3 - EXECUTION

3.1 EXAMINATION

A. Examine substrates and conditions for compliance with requirements for installation tolerances and other conditions affecting performance of insulation application.

1. Verify that systems to be insulated have been tested and are free of defects.
2. Verify that surfaces to be insulated are clean and dry.

B. Proceed with installation only after unsatisfactory conditions have been corrected.

3.2 PREPARATION

A. Surface Preparation: Clean and dry surfaces to receive insulation. Remove materials that will adversely affect insulation application.

3.3 GENERAL INSTALLATION REQUIREMENTS

A. Install insulation materials, accessories, and finishes with smooth, straight, and even surfaces; free of voids throughout the length of ducts and fittings.

B. Install insulation materials, vapor barriers or retarders, jackets, and thicknesses required for each item of duct system as specified in insulation system schedules.

C. Install accessories compatible with insulation materials and suitable for the service. Install accessories that do not corrode, soften, or otherwise attack insulation or jacket in either wet or dry state.

D. Install insulation with longitudinal seams at top and bottom of horizontal runs.

E. Install multiple layers of insulation with longitudinal and end seams staggered.

F. Keep insulation materials dry during application and finishing.

G. Install insulation with tight longitudinal seams and end joints. Bond seams and joints with adhesive recommended by insulation material manufacturer.

H. Install insulation with least number of joints practical.

I. Where vapor barrier is indicated, seal joints, seams, and penetrations in insulation at hangers, supports, anchors, and other projections with vapor-barrier mastic.

1. Install insulation continuously through hangers and around anchor attachments.
2. For insulation application where vapor barriers are indicated, extend insulation on anchor legs from point of attachment to supported item to point of attachment to structure. Taper and seal ends at attachment to structure with vapor-barrier mastic.
3. Install insert materials and install insulation to tightly join the insert. Seal insulation to insulation inserts with adhesive or sealing compound recommended by insulation material manufacturer.

J. Apply adhesives, mastics, and sealants at manufacturer's recommended coverage rate and wet and dry film thicknesses.

K. Install insulation with factory-applied jackets as follows:

1. Draw jacket tight and smooth.
2. Cover circumferential joints with 3-inch-wide strips, of same material as insulation jacket. Secure strips with adhesive and outward clinching staples along both edges of strip, spaced 4 inches o.c.
3. Overlap jacket longitudinal seams at least 1-1/2 inches. Clean and dry surface to receive self-sealing lap. Staple laps with outward clinching staples along edge at 2 inches o.c.

    a. For below ambient services, apply vapor-barrier mastic over staples.

4. Cover joints and seams with tape, according to insulation material manufacturer's written instructions, to maintain vapor seal.
5. Where vapor barriers are indicated, apply vapor-barrier mastic on seams and joints and at ends adjacent to duct flanges and fittings.

L. Cut insulation in a manner to avoid compressing insulation more than 75 percent of its nominal thickness.

M. Finish installation with systems at operating conditions. Repair joint separations and cracking due to thermal movement.

N. Repair damaged insulation facings by applying same facing material over damaged areas. Extend patches at least 4 inches beyond damaged areas. Adhere, staple, and seal patches similar to butt joints.

3.4 PENETRATIONS

A. Insulation Installation at Roof Penetrations: Install insulation continuously through roof penetrations.

1. Seal penetrations with flashing sealant.
2. For applications requiring only indoor insulation, terminate insulation above roof surface and seal with joint sealant. For applications requiring indoor and outdoor insulation, install insulation for outdoor applications tightly joined to indoor insulation ends. Seal joint with joint sealant.
3. Extend jacket of outdoor insulation outside roof flashing at least 2 inches below top of roof flashing.
4. Seal jacket to roof flashing with flashing sealant.

B. Insulation Installation at Aboveground Exterior Wall Penetrations: Install insulation continuously through wall penetrations.

1. Seal penetrations with flashing sealant.
2. For applications requiring only indoor insulation, terminate insulation inside wall surface and seal with joint sealant. For applications requiring indoor and outdoor insulation, install insulation for outdoor applications tightly joined to indoor insulation ends. Seal joint with joint sealant.
3. Extend jacket of outdoor insulation outside wall flashing and overlap wall flashing at least 2 inches.
4. Seal jacket to wall flashing with flashing sealant.

C. Insulation Installation at Interior Wall and Partition Penetrations (That Are Not Fire Rated): Install insulation continuously through walls and partitions.

D. Insulation Installation at Fire-Rated Wall and Partition Penetrations: Terminate insulation at fire damper sleeves for fire-rated wall and partition penetrations. Externally insulate damper sleeves to match adjacent insulation and overlap duct insulation at least 2 inches.

1. Comply with requirements in Section 078413 "Penetration Firestopping" and fire-resistive joint sealers.

E. Insulation Installation at Floor Penetrations:

1. Duct: For penetrations through fire-rated assemblies, terminate insulation at fire damper sleeves and externally insulate damper sleeve beyond floor to match adjacent duct insulation. Overlap damper sleeve and duct insulation at least 2 inches.
2. Seal penetrations through fire-rated assemblies. Comply with requirements in Section 078413 "Penetration Firestopping."

3.5 INSTALLATION OF MINERAL-FIBER INSULATION

A. Blanket Insulation Installation on Ducts and Plenums: Secure with adhesive and insulation pins.

1. Apply adhesives according to manufacturer's recommended coverage rates per unit area, for 100 percent coverage of duct and plenum surfaces.
2. Apply adhesive to entire circumference of ducts and to all surfaces of fittings and transitions.
3. Install either capacitor-discharge-weld pins and speed washers or cupped-head, capacitor-discharge-weld pins on sides and bottom of horizontal ducts and sides of vertical ducts as follows:

    a. On duct sides with dimensions 18 inches and smaller, place pins along longitudinal centerline of duct. Space 3 inches maximum from insulation end joints, and 16 inches o.c.
    b. On duct sides with dimensions larger than 18 inches, place pins 16 inches o.c. each way, and 3 inches maximum from insulation joints. Install additional pins to hold insulation tightly against surface at cross bracing.
    c. Pins may be omitted from top surface of horizontal, rectangular ducts and plenums.
    d. Do not overcompress insulation during installation.
    e. Impale insulation over pins and attach speed washers.
    f. Cut excess portion of pins extending beyond speed washers or bend parallel with insulation surface. Cover exposed pins and washers with tape matching insulation facing.

4. For ducts and plenums with surface temperatures below ambient, install a continuous unbroken vapor barrier. Create a facing lap for longitudinal seams and end joints with insulation by removing 2 inches from one edge and one end of insulation segment. Secure laps to adjacent insulation section with 1/2-inch outward-clinching staples, 1 inch o.c. Install vapor barrier consisting of factory- or field-applied jacket, adhesive, vapor-barrier mastic, and sealant at joints, seams, and protrusions.

    a. Repair punctures, tears, and penetrations with tape or mastic to maintain vapor-barrier seal.
    b. Install vapor stops for ductwork and plenums operating below 50 deg F at 18-foot intervals. Vapor stops shall consist of vapor-barrier mastic applied in a Z-shaped pattern over insulation face, along butt end of insulation, and over the surface. Cover insulation face and surface to be insulated a width equal to two times the insulation thickness, but not less than 3 inches.

5. Overlap unfaced blankets a minimum of 2 inches on longitudinal seams and end joints. At end joints, secure with steel bands spaced a maximum of 18 inches o.c.
6. Install insulation on rectangular duct elbows and transitions with a full insulation section for each surface. Install insulation on round and flat-oval duct elbows with individually mitered gores cut to fit the elbow.
7. Insulate duct stiffeners, hangers, and flanges that protrude beyond insulation surface with 6-inch-wide strips of same material used to insulate duct. Secure on alternating sides of stiffener, hanger, and flange with pins spaced 6 inches o.c.

3.6 FIELD-APPLIED JACKET INSTALLATION

A. Where glass-cloth jackets are indicated, install directly over bare insulation or insulation with factory-applied jackets.

1. Draw jacket smooth and tight to surface with 2-inch overlap at seams and joints.
2. Embed glass cloth between two 0.062-inch-thick coats of lagging adhesive.
3. Completely encapsulate insulation with coating, leaving no exposed insulation.

B. Where FSK jackets are indicated, install as follows:

1. Draw jacket material smooth and tight.
2. Install lap or joint strips with same material as jacket.
3. Secure jacket to insulation with manufacturer's recommended adhesive.
4. Install jacket with 1-1/2-inch laps at longitudinal seams and 3-inch-wide joint strips at end joints.
5. Seal openings, punctures, and breaks in vapor-retarder jackets and exposed insulation with vapor-barrier mastic.

C. Where PVC jackets are indicated, install with 1-inch overlap at longitudinal seams and end joints; for horizontal applications, install with longitudinal seams along top and bottom of tanks and vessels. Seal with manufacturer's recommended adhesive.

1. Apply two continuous beads of adhesive to seams and joints, one bead under lap and the finish bead along seam and joint edge.

D. Where metal jackets are indicated, install with 2-inch overlap at longitudinal seams and end joints. Overlap longitudinal seams arranged to shed water. Seal end joints with weatherproof sealant recommended by insulation manufacturer. Secure jacket with stainless-steel bands 12 inches o.c. and at end joints.

3.7 FINISHES

A. Insulation with ASJ, Glass-Cloth, or Other Paintable Jacket Material: Paint jacket with paint system identified below and as specified in Division 9.

1. Flat Acrylic Finish: Two finish coats over a primer that is compatible with jacket material and finish coat paint. Add fungicidal agent to render fabric mildew proof.

a. Finish Coat Material: Interior, flat, latex-emulsion size.

B. Color: Final color as selected by Engineer. Vary first and second coats to allow visual inspection of the completed Work.

C. Do not field paint aluminum or stainless-steel jackets.

3.8 FIELD QUALITY CONTROL

A. Perform tests and inspections.

B. Tests and Inspections:

1. Inspect ductwork, randomly selected by Engineer, by removing field-applied jacket and insulation in layers in reverse order of their installation.

C. All insulation applications will be considered defective Work if sample inspection reveals noncompliance with requirements.

3.9 DUCT INSULATION SCHEDULE, GENERAL

A. Plenums and Ducts Requiring Insulation:

1. Indoor, concealed supply and outdoor air.
2. Indoor, exposed supply and outdoor air.
3. Indoor, concealed return located in unconditioned space.
4. Indoor, exposed return located in unconditioned space.
5. Indoor, concealed exhaust between isolation damper and penetration of building exterior.
6. Indoor, exposed exhaust between isolation damper and penetration of building exterior.
7. Outdoor, concealed supply and return.
8. Outdoor, exposed supply and return.

B. Items Not Insulated:

1. Fibrous-glass ducts.
2. Metal ducts with duct liner of sufficient thickness to comply with energy code and ASHRAE/IESNA 90.1.
3. Factory-insulated flexible ducts.
4. Factory-insulated plenums and casings.
5. Flexible connectors.
6. Vibration-control devices.
7. Factory-insulated access panels and doors.

3.10 INDOOR DUCT AND PLENUM INSULATION SCHEDULE

A. Service: Round & rectangular, supply-air ducts concealed.
1. Material: Mineral-fiber blanket.
2. Thickness: 3 inches (R-8 min).
3. Number of Layers: One.
4. Field-Applied Jacket: Foil and paper.
5. Vapor Retarder Required: Yes.

B. Service: Round & rectangular, return, outside-air and fume hood exhaust ducts concealed.
1. Material: Mineral-fiber blanket.
2. Thickness: 2 inches (R-6 min).
3. Number of Layers: One.
4. Field-Applied Jacket: Foil and paper.
5. Vapor Retarder Required: Yes.

C. Service: Round supply, make-up, and outside-air ducts, exposed in conditioned space.

1. Double wall, with 2" insulation thickness, and painted.

D. Service: Return air duct, exposed in conditioned space: No insulation. Paint duct.

E. Service: Ten feet of supply and return air ducts closest to AHU or FCU.
   1. Material: In addition to exterior wrap, provide internal liner for sound attenuation purposes.
   2. Thickness: 1 inches.

F. Service: Ten feet of exhaust air duct closest to where duct penetrates the exterior envelope.
   1. Material: Exterior wrap.
   2. Thickness: 2 inches.

G. Where ductwork is not completely concealed, paint all ductwork and insulation. Coordinate color and finish with Owner.

END OF SECTION 230713

SECTION 230716 - HVAC EQUIPMENT INSULATION

PART 1 - GENERAL

1.1 RELATED DOCUMENTS

A. Drawings and general provisions of the Contract, including General and Supplementary Conditions and Division 01 Specification Sections, apply to this Section.

1.2 SUMMARY

A. Section includes insulating the following HVAC equipment that is not factory insulated:
   1. Pumps
   2. Expansion/compression tanks.
   3. Air separators.

B. Related Sections:
   1. Section 230713 "Duct Insulation."
   2. Section 230719 "HVAC Piping Insulation."

1.3 ACTION SUBMITTALS

A. Product Data: For each type of product indicated. Include thermal conductivity, water-vapor permeance thickness, and jackets (both factory- and field-applied if any).

B. Sustainability Submittals:
   1. Laboratory Test Reports: For adhesives and sealants, documentation indicating that products comply with the testing and product requirements of the California Department of Health Services' "Standard Practice for the Testing of Volatile Organic Emissions from Various Sources Using Small-Scale Environmental Chambers."

C. Shop Drawings: Include plans, elevations, sections, details, and attachments to other work.
   1. Detail application of protective shields, saddles, and inserts at hangers for each type of insulation and hanger.
   2. Detail removable insulation at equipment connections.
   3. Detail application of field-applied jackets.
   4. Detail application at linkages of control devices.
   5. Detail field application for each equipment type.

1.4 INFORMATIONAL SUBMITTALS

A. Qualification Data: For qualified Installer.

B. Material Test Reports: From a qualified testing agency acceptable to authorities having jurisdiction indicating, interpreting, and certifying test results for compliance of insulation materials, sealers, attachments, cements, and jackets, with requirements indicated. Include dates of tests and test methods employed.

C. Field quality-control reports.

1.5 QUALITY ASSURANCE

A. Installer Qualifications: Skilled mechanics who have successfully completed an apprenticeship program or another craft training program certified by the Department of Labor, Bureau of Apprenticeship and Training.

B. Surface-Burning Characteristics: For insulation and related materials, as determined by testing identical products according to ASTM E 84, by a testing agency acceptable to authorities having jurisdiction. Factory label insulation and jacket materials and adhesive, mastic, tapes, and cement material containers, with appropriate markings of applicable testing agency.
   1. Insulation Installed Indoors: Flame-spread index of 25 or less, and smoke-developed index of 50 or less.
   2. Insulation Installed Outdoors: Flame-spread index of 75 or less, and smoke-developed index of 150 or less.

1.6 DELIVERY, STORAGE, AND HANDLING

A. Packaging: Insulation material containers shall be marked by manufacturer with appropriate ASTM standard designation, type and grade, and maximum use temperature.

1.7 COORDINATION

A. Coordinate sizes and locations of supports, hangers, and insulation shields specified in Section 230529 "Hangers and Supports for HVAC Piping and Equipment."

B. Coordinate clearance requirements with equipment Installer for equipment insulation application.

1.8 SCHEDULING

A. Schedule insulation application after pressure testing systems and, where required, after installing and testing heat tracing. Insulation application may begin on segments that have satisfactory test results.

B. Complete installation and concealment of plastic materials as rapidly as possible in each area of construction.

PART 2 - PRODUCTS

2.1 INSULATION MATERIALS

A. Comply with requirements in "Breeching Insulation Schedule" and "Equipment Insulation Schedule" articles for where insulating materials shall be applied.

B. Products shall not contain asbestos, lead, mercury, or mercury compounds.

C. Products that come in contact with stainless steel shall have a leachable chloride content of less than 50 ppm when tested according to ASTM C 871.

D. Insulation materials for use on austenitic stainless steel shall be qualified as acceptable according to ASTM C 795.

E. Foam insulation materials shall not use CFC or HCFC blowing agents in the manufacturing process.

F. Flexible Elastomeric Insulation: Closed-cell, sponge- or expanded-rubber materials. Comply with ASTM C 534, Type I for tubular materials and Type II for sheet materials.
1. Manufacturers: Subject to compliance with requirements, provide products by one of the following:
   a. Aeroflex USA, Inc.
   b. Armacell LLC.
   c. K-Flex USA.

2.2 ADHESIVES

A. Materials shall be compatible with insulation materials, jackets, and substrates and for bonding insulation to itself and to surfaces to be insulated unless otherwise indicated.

B. Flexible Elastomeric Adhesive: Comply with MIL-A-24179A, Type II, Class I.
1. Manufacturers: Subject to compliance with requirements, provide products by one of the following:
   a. Aeroflex USA, Inc.
   b. Armacell LLC.
   c. Foster Brand; H. B. Fuller Construction Products.
   d. K-Flex USA.
2. For indoor applications, adhesive shall have a VOC content of 50 g/L or less when calculated according to 40 CFR 59, Subpart D (EPA Method 24).

C. ASJ Adhesive, and FSK Jacket Adhesive: Comply with MIL-A-3316C, Class 2, Grade A for bonding insulation jacket lap seams and joints.
1. Manufacturers: Subject to compliance with requirements, provide products by one of the following:
   a. Childers Brand; H. B. Fuller Construction Products.
   b. Foster Brand; H. B. Fuller Construction Products.
2. For indoor applications, adhesive shall have a VOC content of 50 g/L or less when calculated according to 40 CFR 59, Subpart D (EPA Method 24).

2.3 MASTICS

A. Materials shall be compatible with insulation materials, jackets, and substrates; comply with MIL-PRF-19565C, Type II.

1. For indoor applications, use mastics that have a VOC content of 50 g/L or less when calculated according to 40 CFR 59, Subpart D (EPA Method 24).

B. Vapor-Barrier Mastic: Water based; suitable for indoor and outdoor use on below ambient services.
1. Manufacturers: Subject to compliance with requirements, provide products by one of the following:

   a. Foster Brand; H. B. Fuller Construction Products.
   b. Knauf Insulation.

2. Water-Vapor Permeance: ASTM E 96/E 96M, Procedure B, 0.013 perm at 43-mil dry film thickness.
3. Service Temperature Range: Minus 20 to plus 180 deg F.
4. Solids Content: ASTM D 1644, 58 percent by volume and 70 percent by weight.
5. Color: White.

C. Breather Mastic: Water based; suitable for indoor and outdoor use on above ambient services.
1. Manufacturers: Subject to compliance with requirements, provide products by one of the following:

   a. Childers Brand; H. B. Fuller Construction Products.
   b. Foster Brand; H. B. Fuller Construction Products.
   c. Knauf Insulation.

2. Water-Vapor Permeance: ASTM F 1249, 1.8 perms at 0.0625-inch dry film thickness.
3. Service Temperature Range: Minus 20 to plus 180 deg F.
4. Solids Content: 60 percent by volume and 66 percent by weight.
5. Color: White.

2.4 LAGGING ADHESIVES

A. Description: Comply with MIL-A-3316C, Class I, Grade A and shall be compatible with insulation materials, jackets, and substrates.
1. For indoor applications, use lagging adhesives that have a VOC content of 50 g/L or less when calculated according to 40 CFR 59, Subpart D (EPA Method 24).

2. Manufacturers: Subject to compliance with requirements, provide products by one of the following:

   a. Childers Brand; H. B. Fuller Construction Products.
   b. Foster Brand; H. B. Fuller Construction Products.

3. Fire-resistant, water-based lagging adhesive and coating for use indoors to adhere fire-resistant lagging cloths over equipment insulation.

4. Service Temperature Range: 0 to plus 180 deg F.
5. Color: White.

2.5 SEALANTS

A. Joint Sealants:
1. Materials shall be compatible with insulation materials, jackets, and substrates.
2. Permanently flexible, elastomeric sealant.
3. Service Temperature Range: Minus 100 to plus 300 deg F.
4. Color: White or gray.
5. For indoor applications, sealants shall have a VOC content of 420 g/L or less when calculated according to 40 CFR 59, Subpart D (EPA Method 24).
6. Sealants shall comply with the testing and product requirements of the California Department of Health Services' "Standard Practice for the Testing of Volatile Organic Emissions from Various Sources Using Small-Scale Environmental Chambers."

B. ASJ, FSK and Metal Jacket Flashing Sealants:
1. Materials shall be compatible with insulation materials, jackets, and substrates.
2. Fire- and water-resistant, flexible, elastomeric sealant.
3. Service Temperature Range: Minus 40 to plus 250 deg F.
4. Color: Aluminum.
5. For indoor applications, sealants shall have a VOC content of 420 g/L or less when calculated according to 40 CFR 59, Subpart D (EPA Method 24).
6. Sealants shall comply with the testing and product requirements of the California Department of Health Services' "Standard Practice for the Testing of Volatile Organic Emissions from Various Sources Using Small-Scale Environmental Chambers."

2.6 FIELD-APPLIED JACKETS

A. Field-applied jackets shall comply with ASTM C 921, Type I, unless otherwise indicated.

B. Metal Jacket:
1. Aluminum Jacket: Comply with ASTM B 209, Alloy 3003, 3005, 3105, or 5005, Temper H-14.
a. Finish and thickness are indicated in field-applied jacket schedules.
b. Moisture Barrier for Outdoor Applications: 3-mil-thick, heat-bonded polyethylene and kraft paper.
c. Factory-Fabricated Fitting Covers:

1) Same material, finish, and thickness as jacket.
2) Preformed two-piece or gore, 45- and 90-degree, short- and long-radius elbows.
3) Tee covers.
4) Flange and union covers.
5) End caps.
6) Beveled collars.
7) Valve covers.
8) Field fabricate fitting covers only if factory-fabricated fitting covers are not available.

2.7 TAPES

A. Aluminum-Foil Tape: Vapor-retarder tape with acrylic adhesive.
   1. Width: 4 inches.
   2. Thickness: 3.7 mils.
   3. Adhesion: 100 ounces force/inch in width.
   4. Elongation: 5 percent.
   5. Tensile Strength: 34 lbf/inch in width.

2.8 SECUREMENTS

A. Bands:
   1. Stainless Steel: ASTM A 167 or ASTM A 240/A 240M, Type 304 or Type 316; 0.015 inch thick, 3/4 inch wide .
   2. Springs: Twin spring set constructed of stainless steel with ends flat and slotted to accept metal bands. Spring size determined by manufacturer for application.

B. Insulation Pins and Hangers:
   1. Capacitor-Discharge-Weld Pins: Copper- or zinc-coated steel pin, fully annealed for capacitor-discharge welding, 0.135-inch- diameter shank, length to suit depth of insulation indicated.

C. Staples: Outward-clinching insulation staples, nominal 3/4-inch-wide, stainless steel or Monel.

D. Wire: 0.062-inch soft-annealed, stainless steel.

2.9 CORNER ANGLES

A. Aluminum Corner Angles: 0.040 inch thick, minimum 1 by 1 inch, aluminum according to ASTM B 209, Alloy 3003, 3005, 3105, or 5005; Temper H-14.

PART 3 - EXECUTION

3.1 EXAMINATION

A. Examine substrates and conditions for compliance with requirements for installation tolerances and other conditions affecting performance of insulation application.
   1. Verify that systems and equipment to be insulated have been tested and are free of defects.
   2. Verify that surfaces to be insulated are clean and dry.

B. Proceed with installation only after unsatisfactory conditions have been corrected.

3.2 PREPARATION

A. Surface Preparation: Clean and prepare surfaces to be insulated. Before insulating, apply a corrosion coating to insulated surfaces as follows:

1. Carbon Steel: Coat carbon steel operating at a service temperature between 32 and 300 deg F with an epoxy coating. Consult coating manufacturer for appropriate coating materials and application methods for operating temperature range.

B. Mix insulating cements with clean potable water; if insulating cements are to be in contact with stainless-steel surfaces, use demineralized water.

3.3 GENERAL INSTALLATION REQUIREMENTS

A. Install insulation materials, accessories, and finishes with smooth, straight, and even surfaces; free of voids throughout the length of equipment.

B. Install insulation materials, forms, vapor barriers or retarders, jackets, and thicknesses required for each item of equipment as specified in insulation system schedules.

C. Install accessories compatible with insulation materials and suitable for the service. Install accessories that do not corrode, soften, or otherwise attack insulation or jacket in either wet or dry state.

D. Install insulation with longitudinal seams at top and bottom of horizontal runs.

E. Install multiple layers of insulation with longitudinal and end seams staggered.

F. Keep insulation materials dry during application and finishing.

G. Install insulation with tight longitudinal seams and end joints. Bond seams and joints with adhesive recommended by insulation material manufacturer.

H. Install insulation with least number of joints practical.

I. Where vapor barrier is indicated, seal joints, seams, and penetrations in insulation at hangers, supports, anchors, and other projections with vapor-barrier mastic.
   1. Install insulation continuously through hangers and around anchor attachments.
   2. For insulation application where vapor barriers are indicated, extend insulation on anchor legs from point of attachment to supported item to point of attachment to structure. Taper and seal ends at attachment to structure with vapor-barrier mastic.
   3. Install insert materials and install insulation to tightly join the insert. Seal insulation to insulation inserts with adhesive or sealing compound recommended by insulation material manufacturer.
   4. Cover inserts with jacket material matching adjacent insulation. Install shields over jacket, arranged to protect jacket from tear or puncture by hanger, support, and shield.

J. Apply adhesives, mastics, and sealants at manufacturer's recommended coverage rate and wet and dry film thicknesses.

K. Install insulation with factory-applied jackets as follows:
   1. Draw jacket tight and smooth.
   2. Cover circumferential joints with 3-inch-wide strips, of same material as insulation jacket. Secure strips with adhesive and outward clinching staples along both edges of strip, spaced 4 inches o.c.

3. Overlap jacket longitudinal seams at least 1-1/2 inches. Clean and dry surface to receive self-sealing lap. Staple laps with outward clinching staples along edge at 4 inches o.c.

    a. For below ambient services, apply vapor-barrier mastic over staples.

4. Cover joints and seams with tape, according to insulation material manufacturer's written instructions, to maintain vapor seal.
5. Where vapor barriers are indicated, apply vapor-barrier mastic on seams and joints.

L. Cut insulation in a manner to avoid compressing insulation more than 75 percent of its nominal thickness.

M. Finish installation with systems at operating conditions. Repair joint separations and cracking due to thermal movement.

N. Repair damaged insulation facings by applying same facing material over damaged areas. Extend patches at least 4 inches beyond damaged areas. Adhere, staple, and seal patches similar to butt joints.

O. For above ambient services, do not install insulation to the following:
1. Vibration-control devices.
2. Testing agency labels and stamps.
3. Nameplates and data plates.
4. Manholes.
5. Handholes.
6. Cleanouts.

3.4 INSTALLATION OF EQUIPMENT, TANK, AND VESSEL INSULATION

A. Flexible Elastomeric Thermal Insulation Installation for Tanks and Vessels: Install insulation over entire surface of tanks and vessels.
1. Apply 100 percent coverage of adhesive to surface with manufacturer's recommended adhesive.
2. Seal longitudinal seams and end joints.

B. Insulation Installation on Pumps:
1. Fabricate metal boxes lined with insulation. Fit boxes around pumps and coincide box joints with splits in pump casings. Fabricate joints with outward bolted flanges. Bolt flanges on 6-inch centers, starting at corners. Install 3/8-inch-diameter fasteners with wing nuts. Alternatively, secure the box sections together using a latching mechanism.
2. Fabricate boxes from galvanized steel, at least 0.050 inch thick.
3. For below ambient services, install a vapor barrier at seams, joints, and penetrations. Seal between flanges with replaceable gasket material to form a vapor barrier.

3.5 FIELD-APPLIED JACKET INSTALLATION

A. Where metal jackets are indicated, install with 2-inch overlap at longitudinal seams and end joints. Overlap longitudinal seams arranged to shed water. Seal end joints with weatherproof

sealant recommended by insulation manufacturer. Secure jacket with stainless-steel bands 12 inches o.c. and at end joints.

3.6 FINISHES

A. Flexible Elastomeric Thermal Insulation: After adhesive has fully cured, apply two coats of insulation manufacturer's recommended protective coating.

B. Color: Final color as selected by Engineer. Vary first and second coats to allow visual inspection of the completed Work.

C. Do not field paint aluminum or stainless-steel jackets.

3.7 FIELD QUALITY CONTROL

A. Perform tests and inspections.

B. Tests and Inspections: Inspect field-insulated equipment, randomly selected by Engineer, by removing field-applied jacket and insulation in layers in reverse order of their installation. Extent of inspection shall be limited to one location(s) for each type of equipment defined in the "Equipment Insulation Schedule" Article. For large equipment, remove only a portion adequate to determine compliance.

C. All insulation applications will be considered defective Work if sample inspection reveals noncompliance with requirements.

3.8 EQUIPMENT INSULATION SCHEDULE

A. Insulation materials and thicknesses are identified below. If more than one material is listed for a type of equipment, selection from materials listed is Contractor's option.

B. Insulate indoor and outdoor equipment that is not factory insulated.

C. Chilled-water expansion/compression tank, air-separator, and any other cold surface capable of forming condensation: Insulation shall be the following:
   1. Flexible Elastomeric: 2 inch thick.

D. Install jacket over insulation material. For insulation with factory-applied jacket, install the field-applied jacket over the factory-applied jacket.
   1. Aluminum, smooth: 0.020 inch thick.

END OF SECTION 230716

SECTION 230719 - HVAC PIPING INSULATION

PART 1 - GENERAL

1.1 RELATED DOCUMENTS

A. Drawings and general provisions of the Contract, including General and Supplementary Conditions and Division 01 Specification Sections, apply to this Section.

1.2 SUMMARY

A. Section includes insulating the following HVAC piping systems:

1. Condensate drain piping, indoors.
2. Chilled-water and brine piping, indoors.

B. Related Sections:

1. Section 230713 "Duct Insulation."

1.3 ACTION SUBMITTALS

A. Product Data: For each type of product indicated. Include thermal conductivity, water-vapor permeance thickness, and jackets (both factory and field applied if any).

B. Shop Drawings: Include plans, elevations, sections, details, and attachments to other work.

1. Detail application of protective shields, saddles, and inserts at hangers for each type of insulation and hanger.
2. Detail attachment and covering of heat tracing inside insulation.
3. Detail insulation application at pipe expansion joints for each type of insulation.
4. Detail insulation application at elbows, fittings, flanges, valves, and specialties for each type of insulation.
5. Detail removable insulation at piping specialties.
6. Detail application of field-applied jackets.
7. Detail application at linkages of control devices.

1.4 QUALITY ASSURANCE

A. Surface-Burning Characteristics: For insulation and related materials, as determined by testing identical products according to ASTM E 84, by a testing and inspecting agency acceptable to authorities having jurisdiction. Factory label insulation and jacket materials and adhesive, mastic, tapes, and cement material containers, with appropriate markings of applicable testing agency.

1. Insulation Installed Indoors: Flame-spread index of 25 or less, and smoke-developed index of 50 or less.

2. Insulation Installed Outdoors: Flame-spread index of 75 or less, and smoke-developed index of 150 or less.

1.5 DELIVERY, STORAGE, AND HANDLING

A. Packaging: Insulation material containers shall be marked by manufacturer with appropriate ASTM standard designation, type and grade, and maximum use temperature.

1.6 COORDINATION

A. Coordinate sizes and locations of supports, hangers, and insulation shields specified in Section 230529 "Hangers and Supports for HVAC Piping and Equipment."

B. Coordinate clearance requirements with piping Installer for piping insulation application. Before preparing piping Shop Drawings, establish and maintain clearance requirements for installation of insulation and field-applied jackets and finishes and for space required for maintenance.

C. Coordinate installation and testing of heat tracing.

1.7 SCHEDULING

A. Schedule insulation application after pressure testing systems and, where required, after installing and testing heat tracing. Insulation application may begin on segments that have satisfactory test results.

B. Complete installation and concealment of plastic materials as rapidly as possible in each area of construction.

PART 2 - PRODUCTS

2.1 MANUFACTURERS

A. Manufacturers: Subject to compliance with requirements, manufacturers offering products that may be incorporated into the Work include, but are not limited to, the following:

1. Cellular-Glass Insulation:
   a. Pittsburgh-Corning Corp.
   b. Cell-U-Foam Corporation; Ultra-CUF.

2. Flexible Elastomeric Thermal Insulation:
   a. Aeroflex USA Inc.; Aerocel.
   b. Armacell LLC; AP Armaflex.
   c. RBX Corporation; Insul-Sheet 1800 and Insul-Tube 180.

3. Closed-Cell Phenolic-Foam Insulation:
   a. Kooltherm Insulation Products, Ltd.

2.2 INSULATION MATERIALS

A. Mineral-fiber insulation will NOT be allowed for use on any cold piping systems.

B. Mineral-fiber wrap is NOT approved for use on piping insulation.

C. Comply with requirements in "Piping Insulation Schedule, General," "Indoor Piping Insulation Schedule," "Outdoor, Aboveground Piping Insulation Schedule," and "Outdoor, Underground Piping Insulation Schedule" articles for where insulating materials shall be applied.

D. Products shall not contain asbestos, lead, mercury, or mercury compounds.

E. Products that come in contact with stainless steel shall have a leachable chloride content of less than 50 ppm when tested according to ASTM C 871.

F. Insulation materials for use on austenitic stainless steel shall be qualified as acceptable according to ASTM C 795.

G. Foam insulation materials shall not use CFC or HCFC blowing agents in the manufacturing process.

H. Cellular Glass: Inorganic, incombustible, foamed or cellulated glass with annealed, rigid, hermetically sealed cells. Factory-applied jacket requirements are specified in "Factory-Applied Jackets" Article.
   1. Block Insulation: ASTM C 552, Type I.
   2. Special-Shaped Insulation: ASTM C 552, Type III.
   3. Preformed Pipe Insulation with Factory-Applied: Comply with ASTM C 552, Type II, Class 2.
   4. Factory fabricate shapes according to ASTM C 450 and ASTM C 585.

I. Flexible Elastomeric Insulation: Closed-cell, sponge- or expanded-rubber materials. Comply with ASTM C 534, Type I for tubular materials.

J. Phenolic:
   1. Preformed pipe insulation of rigid, expanded, closed-cell structure. Comply with ASTM C 1126, Type III, Grade 1.
   2. Block insulation of rigid, expanded, closed-cell structure. Comply with ASTM C 1126, Type II, Grade 1.
   3. Factory fabricate shapes according to ASTM C 450 and ASTM C 585.
   4. Factory-Applied Jacket: Requirements are specified in "Factory-Applied Jackets" Article.

      a. Preformed Pipe Insulation: ASJ.

2.3 ADHESIVES

A. Materials shall be compatible with insulation materials, jackets, and substrates and for bonding insulation to itself and to surfaces to be insulated unless otherwise indicated.

B. Cellular-Glass Adhesive: Two-component, thermosetting urethane adhesive containing no flammable solvents, with a service temperature range of minus 100 to plus 200 deg F.

1. Products:

    a. Childers Products, Division of ITW; CP-96.
    b. Foster Products Corporation, H. B. Fuller Company; 81-33.

2. For indoor applications, adhesive shall have a VOC content of 50 g/L or less when calculated according to 40 CFR 59, Subpart D (EPA Method 24).
3. Adhesive shall comply with the testing and product requirements of the California Department of Health Services' "Standard Practice for the Testing of Volatile Organic Emissions from Various Sources Using Small-Scale Environmental Chambers."

C. Phenolic Adhesive: Solvent-based resin adhesive, with a service temperature range of minus 75 to plus 300 deg F.

1. For indoor applications, adhesive shall have a VOC content of 50 g/L or less when calculated according to 40 CFR 59, Subpart D (EPA Method 24).
2. Adhesive shall comply with the testing and product requirements of the California Department of Health Services' "Standard Practice for the Testing of Volatile Organic Emissions from Various Sources Using Small-Scale Environmental Chambers."

D. Flexible Elastomeric and Polyolefin Adhesive: Comply with MIL-A-24179A, Type II, Class I.

1. Products:

    a. Aeroflex USA Inc.; Aeroseal.
    b. Armacell LCC; 520 Adhesive.
    c. Foster Products Corporation, H. B. Fuller Company; 85-75.
    d. RBX Corporation; Rubatex Contact Adhesive.

2. For indoor applications, adhesive shall have a VOC content of 50 g/L or less when calculated according to 40 CFR 59, Subpart D (EPA Method 24).
3. Adhesive shall comply with the testing and product requirements of the California Department of Health Services' "Standard Practice for the Testing of Volatile Organic Emissions from Various Sources Using Small-Scale Environmental Chambers."

E. ASJ Adhesive, and FSK and PVDC Jacket Adhesive: Comply with MIL-A-3316C, Class 2, Grade A for bonding insulation jacket lap seams and joints.

1. Products:

    a. Childers Products, Division of ITW; CP-82.
    b. Foster Products Corporation, H. B. Fuller Company; 85-20.
    c. ITW TACC, Division of Illinois Tool Works; S-90/80.
    d. Marathon Industries, Inc.; 225.
    e. Mon-Eco Industries, Inc.; 22-25.

2. For indoor applications, adhesive shall have a VOC content of 50 g/L or less when calculated according to 40 CFR 59, Subpart D (EPA Method 24).
3. Adhesive shall comply with the testing and product requirements of the California Department of Health Services' "Standard Practice for the Testing of Volatile Organic Emissions from Various Sources Using Small-Scale Environmental Chambers."

2.4 MASTICS

A. Materials shall be compatible with insulation materials, jackets, and substrates; comply with MIL-PRF-19565C, Type II.

1. For indoor applications, use mastics that have a VOC content of 50 g/L or less when calculated according to 40 CFR 59, Subpart D (EPA Method 24).

2.5 LAGGING ADHESIVES

A. Description: Comply with MIL-A-3316C, Class I, Grade A and shall be compatible with insulation materials, jackets, and substrates.

1. For indoor applications, use lagging adhesives that have a VOC content of 50 g/L or less when calculated according to 40 CFR 59, Subpart D (EPA Method 24).
2. Fire-resistant, water-based lagging adhesive and coating for use indoors to adhere fire-resistant lagging cloths over pipe insulation.
3. Service Temperature Range: 0 to plus 180 deg F.
4. Color: White.

2.6 SEALANTS

A. Joint Sealants:

1. Materials shall be compatible with insulation materials, jackets, and substrates.
2. Permanently flexible, elastomeric sealant.
3. Service Temperature Range: Minus 100 to plus 300 deg F.
4. Color: White or gray.
5. For indoor applications, sealants shall have a VOC content of 420 g/L or less when calculated according to 40 CFR 59, Subpart D (EPA Method 24).
6. Sealants shall comply with the testing and product requirements of the California Department of Health Services' "Standard Practice for the Testing of Volatile Organic Emissions from Various Sources Using Small-Scale Environmental Chambers."

B. FSK and Metal Jacket Flashing Sealants:
1. Materials shall be compatible with insulation materials, jackets, and substrates.
2. Fire- and water-resistant, flexible, elastomeric sealant.
3. Service Temperature Range: Minus 40 to plus 250 deg F.
4. Color: Aluminum.
5. For indoor applications, sealants shall have a VOC content of 420 g/L or less when calculated according to 40 CFR 59, Subpart D (EPA Method 24).
6. Sealants shall comply with the testing and product requirements of the California Department of Health Services' "Standard Practice for the Testing of Volatile Organic Emissions from Various Sources Using Small-Scale Environmental Chambers."

C. ASJ Flashing Sealants, Jacket Flashing Sealants:
1. Materials shall be compatible with insulation materials, jackets, and substrates.
2. Fire- and water-resistant, flexible, elastomeric sealant.
3. Service Temperature Range: Minus 40 to plus 250 deg F.

4. Color: White.
5. For indoor applications, sealants shall have a VOC content of 420 g/L or less when calculated according to 40 CFR 59, Subpart D (EPA Method 24).
6. Sealants shall comply with the testing and product requirements of the California Department of Health Services' "Standard Practice for the Testing of Volatile Organic Emissions from Various Sources Using Small-Scale Environmental Chambers."

2.7 FACTORY-APPLIED JACKETS

A. Insulation system schedules indicate factory-applied jackets on various applications. When factory-applied jackets are indicated, comply with the following:

1. ASJ: White, kraft-paper, fiberglass-reinforced scrim with aluminum-foil backing; complying with ASTM C 1136, Type I.
2. FSK Jacket: Aluminum-foil, fiberglass-reinforced scrim with kraft-paper backing; complying with ASTM C 1136, Type II.

2.8 FIELD-APPLIED FABRIC-REINFORCING MESH

A. Woven Glass-Fiber Fabric: Approximately 2 oz./sq. yd. with a thread count of 10 strands by 10 strands/sq. in. for covering pipe and pipe fittings.

2.9 FIELD-APPLIED CLOTHS

A. Woven Glass-Fiber Fabric: Comply with MIL-C-20079H, Type I, plain weave, and presized a minimum of 8 oz./sq. yd..

2.10 FIELD-APPLIED JACKETS

A. Field-applied jackets shall comply with ASTM C 921, Type I, unless otherwise indicated.

B. FSK Jacket: Aluminum-foil-face, fiberglass-reinforced scrim with kraft-paper backing.

C. Metal Jacket:
1. Aluminum Jacket: Comply with ASTM B 209, Alloy 3003, 3005, 3105, or 5005, Temper H-14.

a. Factory cut and rolled to size.
b. Finish and thickness are indicated in field-applied jacket schedules.
c. Moisture Barrier: 3-mil-thick, heat-bonded polyethylene and kraft paper.
d. Factory-Fabricated Fitting Covers:

1) Same material, finish, and thickness as jacket.
2) Preformed 2-piece or gore, 45- and 90-degree, short- and long-radius elbows.
3) Tee covers.
4) Flange and union covers.
5) End caps.

6) Beveled collars.
7) Valve covers.
8) Field fabricate fitting covers only if factory-fabricated fitting covers are not available.

D. Underground Direct-Buried Jacket: 125-mil-thick vapor barrier and waterproofing membrane consisting of a rubberized bituminous resin reinforced with a woven-glass fiber or polyester scrim and laminated aluminum foil.

2.11 TAPES

A. ASJ Tape: White vapor-retarder tape matching factory-applied jacket with acrylic adhesive, complying with ASTM C 1136.
1. Width: 3 inches.
2. Thickness: 11.5 mils.
3. Adhesion: 90 ounces force/inch in width.
4. Elongation: 2 percent.
5. Tensile Strength: 40 lbf/inch in width.
6. ASJ Tape Disks and Squares: Precut disks or squares of ASJ tape.

B. FSK Tape: Foil-face, vapor-retarder tape matching factory-applied jacket with acrylic adhesive; complying with ASTM C 1136.
1. Width: 3 inches.
2. Thickness: 6.5 mils.
3. Adhesion: 90 ounces force/inch in width.
4. Elongation: 2 percent.
5. Tensile Strength: 40 lbf/inch in width.
6. FSK Tape Disks and Squares: Precut disks or squares of FSK tape.

C. Aluminum-Foil Tape: Vapor-retarder tape with acrylic adhesive.
1. Width: 2 inches.
2. Thickness: 3.7 mils.
3. Adhesion: 100 ounces force/inch in width.
4. Elongation: 5 percent.
5. Tensile Strength: 34 lbf/inch in width.

2.12 SECUREMENTS

A. Bands:

1. Stainless Steel: ASTM A 167 or ASTM A 240/A 240M, Type 304 or Type 316; 0.015 inch thick, 3/4 inch wide.

B. Staples: Outward-clinching insulation staples, nominal 3/4-inch-wide, stainless steel or Monel.

C. Wire: 0.062-inch soft-annealed, stainless steel.

PART 3 - EXECUTION

3.1 EXAMINATION

A. Examine substrates and conditions for compliance with requirements for installation tolerances and other conditions affecting performance of insulation application.

1. Verify that systems to be insulated have been tested and are free of defects.
2. Verify that surfaces to be insulated are clean and dry.
3. Proceed with installation only after unsatisfactory conditions have been corrected.

3.2 PREPARATION

A. Surface Preparation: Clean and dry surfaces to receive insulation. Remove materials that will adversely affect insulation application.

B. Surface Preparation: Clean and prepare surfaces to be insulated. Before insulating, apply a corrosion coating to insulated surfaces as follows:
1. Carbon Steel: Coat carbon steel operating at a service temperature between 32 and 300 deg F with an epoxy coating. Consult coating manufacturer for appropriate coating materials and application methods for operating temperature range. **NO EXCEPTION: PIPES SHALL BE PAINTED.**

C. Coordinate insulation installation with the trade installing heat tracing. Comply with requirements for heat tracing that apply to insulation.

D. Mix insulating cements with clean potable water; if insulating cements are to be in contact with stainless-steel surfaces, use demineralized water.

3.3 GENERAL INSTALLATION REQUIREMENTS

A. Install insulation materials, accessories, and finishes with smooth, straight, and even surfaces; free of voids throughout the length of piping including fittings, valves, and specialties.

B. Install insulation materials, forms, vapor barriers or retarders, jackets, and thicknesses required for each item of pipe system as specified in insulation system schedules.

C. Install accessories compatible with insulation materials and suitable for the service. Install accessories that do not corrode, soften, or otherwise attack insulation or jacket in either wet or dry state.

D. Install insulation with longitudinal seams at top and bottom of horizontal runs.

E. Install multiple layers of insulation with longitudinal and end seams staggered.

F. Do not weld brackets, clips, or other attachment devices to piping, fittings, and specialties.

G. Keep insulation materials dry during application and finishing.

H. Install insulation with tight longitudinal seams and end joints. Bond seams and joints with adhesive recommended by insulation material manufacturer.

I. Install insulation with least number of joints practical.

J. Where vapor barrier is indicated, seal joints, seams, and penetrations in insulation at hangers, supports, anchors, and other projections with vapor-barrier mastic.

1. Install insulation continuously through hangers and around anchor attachments.
2. For insulation application where vapor barriers are indicated, extend insulation on anchor legs from point of attachment to supported item to point of attachment to structure. Taper and seal ends at attachment to structure with vapor-barrier mastic.
3. Install insert materials and install insulation to tightly join the insert. Seal insulation to insulation inserts with adhesive or sealing compound recommended by insulation material manufacturer.
4. Cover inserts with jacket material matching adjacent pipe insulation. Install shields over jacket, arranged to protect jacket from tear or puncture by hanger, support, and shield.

K. Apply adhesives, mastics, and sealants at manufacturer's recommended coverage rate and wet and dry film thicknesses.

L. Install insulation with factory-applied jackets as follows:

1. Draw jacket tight and smooth.
2. Cover circumferential joints with 3-inch-wide strips, of same material as insulation jacket. Secure strips with adhesive and outward clinching staples along both edges of strip, spaced 4 inches o.c.
3. Overlap jacket longitudinal seams at least 1-1/2 inches. Install insulation with longitudinal seams at bottom of pipe. Clean and dry surface to receive self-sealing lap. Staple laps with outward clinching staples along edge at 2 inches o.c.

    a. For below-ambient services, apply vapor-barrier mastic over staples.

4. Cover joints and seams with tape, according to insulation material manufacturer's written instructions, to maintain vapor seal.
5. Where vapor barriers are indicated, apply vapor-barrier mastic on seams and joints and at ends adjacent to pipe flanges and fittings.

M. Cut insulation in a manner to avoid compressing insulation more than 75 percent of its nominal thickness.

N. Finish installation with systems at operating conditions. Repair joint separations and cracking due to thermal movement.

O. Repair damaged insulation facings by applying same facing material over damaged areas. Extend patches at least 4 inches beyond damaged areas. Adhere, staple, and seal patches similar to butt joints.

P. For above-ambient services, do not install insulation to the following:

1. Vibration-control devices.

2. Testing agency labels and stamps.
3. Nameplates and data plates.
4. Manholes.
5. Handholes.
6. Cleanouts.

3.4 PENETRATIONS

A. Insulation Installation at Roof Penetrations: Install insulation continuously through roof penetrations.

1. Seal penetrations with flashing sealant.
2. For applications requiring only indoor insulation, terminate insulation above roof surface and seal with joint sealant. For applications requiring indoor and outdoor insulation, install insulation for outdoor applications tightly joined to indoor insulation ends. Seal joint with joint sealant.
3. Extend jacket of outdoor insulation outside roof flashing at least 2 inches below top of roof flashing.
4. Seal jacket to roof flashing with flashing sealant.

B. Insulation Installation at Underground Exterior Wall Penetrations: Terminate insulation flush with sleeve seal. Seal terminations with flashing sealant.

C. Insulation Installation at Aboveground Exterior Wall Penetrations: Install insulation continuously through wall penetrations.

1. Seal penetrations with flashing sealant.
2. For applications requiring only indoor insulation, terminate insulation inside wall surface and seal with joint sealant. For applications requiring indoor and outdoor insulation, install insulation for outdoor applications tightly joined to indoor insulation ends. Seal joint with joint sealant.
3. Extend jacket of outdoor insulation outside wall flashing and overlap wall flashing at least 2 inches.
4. Seal jacket to wall flashing with flashing sealant.

D. Insulation Installation at Interior Wall and Partition Penetrations (That Are Not Fire Rated): Install insulation continuously through walls and partitions.

E. Insulation Installation at Fire-Rated Wall and Partition Penetrations: Install insulation continuously through penetrations of fire-rated walls and partitions.

1. Comply with requirements in Section 078413 "Penetration Firestopping" for firestopping and fire-resistive joint sealers.

F. Insulation Installation at Floor Penetrations:

1. Pipe: Install insulation continuously through floor penetrations.
2. Seal penetrations through fire-rated assemblies. Comply with requirements in Section 078413 "Penetration Firestopping."

3.5 GENERAL PIPE INSULATION INSTALLATION

A. Requirements in this article generally apply to all insulation materials except where more specific requirements are specified in various pipe insulation material installation articles.

B. Insulation Installation on Fittings, Valves, Strainers, Flanges, and Unions:

1. Install insulation over fittings, valves, strainers, flanges, unions, and other specialties with continuous thermal and vapor-retarder integrity unless otherwise indicated.
2. Insulate pipe elbows using preformed fitting insulation or mitered fittings made from same material and density as adjacent pipe insulation. Each piece shall be butted tightly against adjoining piece and bonded with adhesive. Fill joints, seams, voids, and irregular surfaces with insulating cement finished to a smooth, hard, and uniform contour that is uniform with adjoining pipe insulation.
3. Insulate tee fittings with preformed fitting insulation or sectional pipe insulation of same material and thickness as used for adjacent pipe. Cut sectional pipe insulation to fit. Butt each section closely to the next and hold in place with tie wire. Bond pieces with adhesive.
4. Insulate valves using preformed fitting insulation or sectional pipe insulation of same material, density, and thickness as used for adjacent pipe. Overlap adjoining pipe insulation by not less than two times the thickness of pipe insulation, or one pipe diameter, whichever is thicker. For valves, insulate up to and including the bonnets, valve stuffing-box studs, bolts, and nuts. Fill joints, seams, and irregular surfaces with insulating cement.
5. Insulate strainers using preformed fitting insulation or sectional pipe insulation of same material, density, and thickness as used for adjacent pipe. Overlap adjoining pipe insulation by not less than two times the thickness of pipe insulation, or one pipe diameter, whichever is thicker. Fill joints, seams, and irregular surfaces with insulating cement. Insulate strainers so strainer basket flange or plug can be easily removed and replaced without damaging the insulation and jacket. Provide a removable reusable insulation cover. For below-ambient services, provide a design that maintains vapor barrier.
6. Insulate flanges and unions using a section of oversized preformed pipe insulation. Overlap adjoining pipe insulation by not less than two times the thickness of pipe insulation, or one pipe diameter, whichever is thicker.
7. Cover segmented insulated surfaces with a layer of finishing cement and coat with a mastic. Install vapor-barrier mastic for below-ambient services and a breather mastic for above-ambient services. Reinforce the mastic with fabric-reinforcing mesh. Trowel the mastic to a smooth and well-shaped contour.
8. For services not specified to receive a field-applied jacket except for flexible elastomeric and polyolefin, install fitted PVC cover over elbows, tees, strainers, valves, flanges, and unions. Terminate ends with PVC end caps. Tape PVC covers to adjoining insulation facing using PVC tape.
9. Stencil or label the outside insulation jacket of each union with the word "union." Match size and color of pipe labels.

C. Insulate instrument connections for thermometers, pressure gages, pressure temperature taps, test connections, flow meters, sensors, switches, and transmitters on insulated pipes. Shape insulation at these connections by tapering it to and around the connection with insulating cement and finish with finishing cement, mastic, and flashing sealant.

D. Install removable insulation covers at locations indicated. Installation shall conform to the following:

1. Make removable flange and union insulation from sectional pipe insulation of same thickness as that on adjoining pipe. Install same insulation jacket as adjoining pipe insulation.
2. When flange and union covers are made from sectional pipe insulation, extend insulation from flanges or union long at least two times the insulation thickness over adjacent pipe insulation on each side of flange or union. Secure flange cover in place with stainless-steel or aluminum bands. Select band material compatible with insulation and jacket.
3. Construct removable valve insulation covers in same manner as for flanges, except divide the two-part section on the vertical center line of valve body.
4. When covers are made from block insulation, make two halves, each consisting of mitered blocks wired to stainless-steel fabric. Secure this wire frame, with its attached insulation, to flanges with tie wire. Extend insulation at least 2 inches over adjacent pipe insulation on each side of valve. Fill space between flange or union cover and pipe insulation with insulating cement. Finish cover assembly with insulating cement applied in two coats. After first coat is dry, apply and trowel second coat to a smooth finish.
5. Unless a PVC jacket is indicated in field-applied jacket schedules, finish exposed surfaces with a metal jacket.

3.6 INSTALLATION OF CELLULAR-GLASS INSULATION

A. Insulation Installation on Straight Pipes and Tubes:

1. Secure each layer of insulation to pipe with wire or bands and tighten bands without deforming insulation materials.
2. Where vapor barriers are indicated, seal longitudinal seams, end joints, and protrusions with vapor-barrier mastic and joint sealant.
3. For insulation with factory-applied jackets on above-ambient services, secure laps with outward-clinched staples at 6 inches o.c.
4. For insulation with factory-applied jackets on below-ambient services, do not staple longitudinal tabs. Instead, secure tabs with additional adhesive as recommended by insulation material manufacturer and seal with vapor-barrier mastic and flashing sealant.

B. Insulation Installation on Pipe Flanges:

1. Install preformed pipe insulation to outer diameter of pipe flange.
2. Make width of insulation section same as overall width of flange and bolts, plus twice the thickness of pipe insulation.
3. Fill voids between inner circumference of flange insulation and outer circumference of adjacent straight pipe segments with cut sections of cellular-glass block insulation of same thickness as pipe insulation.
4. Install jacket material with manufacturer's recommended adhesive, overlap seams at least 1 inch, and seal joints with flashing sealant.

C. Insulation Installation on Pipe Fittings and Elbows:

1. Install preformed sections of same material as straight segments of pipe insulation when available. Secure according to manufacturer's written instructions.

2. When preformed sections of insulation are not available, install mitered sections of cellular-glass insulation. Secure insulation materials with wire or bands.

D. Insulation Installation on Valves and Pipe Specialties:

1. Install preformed sections of cellular-glass insulation to valve body.
2. Arrange insulation to permit access to packing and to allow valve operation without disturbing insulation.
3. Install insulation to flanges as specified for flange insulation application.

3.7 INSTALLATION OF FLEXIBLE ELASTOMERIC INSULATION

A. Seal longitudinal seams and end joints with manufacturer's recommended adhesive to eliminate openings in insulation that allow passage of air to surface being insulated.

B. Insulation Installation on Pipe Flanges:

1. Install pipe insulation to outer diameter of pipe flange.
2. Make width of insulation section same as overall width of flange and bolts, plus twice the thickness of pipe insulation.
3. Fill voids between inner circumference of flange insulation and outer circumference of adjacent straight pipe segments with cut sections of sheet insulation of same thickness as pipe insulation.
4. Secure insulation to flanges and seal seams with manufacturer's recommended adhesive to eliminate openings in insulation that allow passage of air to surface being insulated.

C. Insulation Installation on Pipe Fittings and Elbows:

1. Install mitered sections of pipe insulation.
2. Secure insulation materials and seal seams with manufacturer's recommended adhesive to eliminate openings in insulation that allow passage of air to surface being insulated.

D. Insulation Installation on Valves and Pipe Specialties:

1. Install preformed valve covers manufactured of same material as pipe insulation when available.
2. When preformed valve covers are not available, install cut sections of pipe and sheet insulation to valve body. Arrange insulation to permit access to packing and to allow valve operation without disturbing insulation.
3. Install insulation to flanges as specified for flange insulation application.
4. Secure insulation to valves and specialties and seal seams with manufacturer's recommended adhesive to eliminate openings in insulation that allow passage of air to surface being insulated.

3.8 INSTALLATION OF PHENOLIC INSULATION

A. General Installation Requirements:

1. Secure single-layer insulation with stainless-steel bands at 12-inch intervals and tighten bands without deforming insulation materials.
2. Install 2-layer insulation with joints tightly butted and staggered at least 3 inches. Secure inner layer with 0.062-inch wire spaced at 12-inch intervals. Secure outer layer with stainless-steel bands at 12-inch intervals.

B. Insulation Installation on Straight Pipes and Tubes:

1. Secure each layer of insulation to pipe with wire or bands and tighten bands without deforming insulation materials.
2. Where vapor barriers are indicated, seal longitudinal seams, end joints, and protrusions with vapor-barrier mastic and joint sealant.
3. For insulation with factory-applied jackets on above-ambient services, secure laps with outward-clinched staples at 6 inches o.c.
4. For insulation with factory-applied jackets with vapor retarders on below-ambient services, do not staple longitudinal tabs. Instead, secure tabs with additional adhesive as recommended by insulation material manufacturer and seal with vapor-barrier mastic and flashing sealant.

C. Insulation Installation on Pipe Flanges:

1. Install preformed pipe insulation to outer diameter of pipe flange.
2. Make width of insulation section same as overall width of flange and bolts, plus twice the thickness of pipe insulation.
3. Fill voids between inner circumference of flange insulation and outer circumference of adjacent straight pipe segments with cut sections of block insulation of same material and thickness as pipe insulation.

D. Insulation Installation on Pipe Fittings and Elbows:

1. Install preformed insulation sections of same material as straight segments of pipe insulation. Secure according to manufacturer's written instructions.

E. Insulation Installation on Valves and Pipe Specialties:

1. Install preformed insulation sections of same material as straight segments of pipe insulation. Secure according to manufacturer's written instructions.
2. Arrange insulation to permit access to packing and to allow valve operation without disturbing insulation.
3. Install insulation to flanges as specified for flange insulation application.

3.9 FIRE-RATED INSULATION SYSTEM INSTALLATION

A. Where fire-rated insulation system is indicated, secure system to ducts and duct hangers and supports to maintain a continuous fire rating.

B. Insulate duct access panels and doors to achieve same fire rating as duct.

C. Install firestopping at penetrations through fire-rated assemblies. Fire-stop systems are specified in Division 07 Section "Penetration Firestopping."

3.10 FIELD-APPLIED JACKET INSTALLATION

A. Where glass-cloth jackets are indicated, install directly over bare insulation or insulation with factory-applied jackets.

1. Draw jacket smooth and tight to surface with 2-inch overlap at seams and joints.
2. Embed glass cloth between two 0.062-inch-thick coats of lagging adhesive.
3. Completely encapsulate insulation with coating, leaving no exposed insulation.

B. Where FSK jackets are indicated, install as follows:

1. Draw jacket material smooth and tight.
2. Install lap or joint strips with same material as jacket.
3. Secure jacket to insulation with manufacturer's recommended adhesive.
4. Install jacket with 1-1/2-inch laps at longitudinal seams and 3-inch-wide joint strips at end joints.
5. Seal openings, punctures, and breaks in vapor-retarder jackets and exposed insulation with vapor-barrier mastic.

C. Where metal jackets are indicated, install with 2-inch overlap at longitudinal seams and end joints. Overlap longitudinal seams arranged to shed water. Seal end joints with weatherproof sealant recommended by insulation manufacturer. Secure jacket with stainless-steel bands 12 inches o.c. and at end joints.

3.11 FINISHES

A. Pipe Insulation with ASJ, Glass-Cloth, or Other Paintable Jacket Material: Paint jacket with paint system identified below and as specified in Division 9 Sections.

1. Flat Acrylic Finish: Two finish coats over a primer that is compatible with jacket material and finish coat paint. Add fungicidal agent to render fabric mildew proof.

a. Finish Coat Material: Interior, flat, latex-emulsion size.

B. Flexible Elastomeric Thermal Insulation: After adhesive has fully cured, apply two coats of insulation manufacturer's recommended protective coating.

C. Color: Final color as selected by Engineer. Vary first and second coats to allow visual inspection of the completed Work.

D. Do not field paint aluminum or stainless-steel jackets.

3.12 FIELD QUALITY CONTROL

A. Perform tests and inspections.

B. Tests and Inspections:

1. Inspect pipe, fittings, strainers, and valves, randomly selected by Engineer, by removing field-applied jacket and insulation in layers in reverse order of their installation. Extent of

inspection shall be limited to three locations of straight pipe, three locations of fittings, two locations of strainers, three locations of valves, for each pipe service defined in the "Piping Insulation Schedule, General" Article.

C. All insulation applications will be considered defective Work if sample inspection reveals noncompliance with requirements.

3.13 PIPING INSULATION SCHEDULE, GENERAL

A. Acceptable preformed pipe and tubular insulation materials and thicknesses are identified for each piping system and pipe size range. If more than one material is listed for a piping system, selection from materials listed is Contractor's option.

B. Items Not Insulated: Unless otherwise indicated, do not install insulation on the following:

1. Drainage piping located in crawl spaces.
2. Underground piping.
3. Chrome-plated pipes and fittings unless there is a potential for personnel injury.

3.14 INDOOR PIPING INSULATION SCHEDULE

A. Condensate and Equipment Drain Water below 60 Deg F:

1. All Pipe Sizes: Insulation shall be the following:
   a. Flexible Elastomeric: 3/4 inch thick.

2. Vapor Retarder Required: Yes.

B. Chilled Water and Brine, 60 Deg F and below:

1. NPS 3 and Smaller: Insulation shall be one of the following:

   a. Cellular Glass: 2 inches thick.
   b. Phenolic: 2 inches thick.

2. NPS 4 to NPS 12: Insulation shall be one of the following:

   a. Cellular Glass: 3 inches thick.
   b. Phenolic: 3 inches thick.

3. Vapor Retarder Required: Yes.

C. Where piping is exposed to view or not completely concealed above wall-to-wall suspended ceiling tiles, insulation shall be painted. Coordinate color and finish with Engineer.

3.15 OUTDOOR PIPING INSULATION SCHEDULE (INCLUDES PUMP ROOM)

A. Condensate and Equipment Drain Water below 60 Deg F:
1. All Pipe Sizes: Insulation shall be the following:

a. Flexible Elastomeric: 3/4 inch thick.

2. Vapor Retarder Required: Yes.
3. Field-Applied Jacket: Aluminum jacket.

B. Chilled Water and Brine, 60 Deg F and below:

1. NPS 3 and Smaller: Insulation shall be one of the following:

a. Cellular Glass: 2.5 inches thick.
b. Phenolic: 2.5 inches thick.

2. NPS 4 to NPS 12: Insulation shall be one of the following:

a. Cellular Glass: 3 inches thick.
b. Phenolic: 3 inches thick.

3. Vapor Retarder Required: Yes.
4. Field-Applied Jacket: Aluminum jacket.

3.16 OUTDOOR, FIELD-APPLIED JACKET SCHEDULE

A. Install jacket over insulation material. For insulation with factory-applied jacket, install the field-applied jacket over the factory-applied jacket.
1. Aluminum, Smooth with Z-Shaped Locking Seam: 0.020 inch thick.

3.17 UNDERGROUND, FIELD-INSTALLED INSULATION JACKET

A. For underground direct-buried piping applications, install underground direct-buried jacket over insulation material.

END OF SECTION 230719

SECTION 230800 - COMMISSIONING OF HVAC

PART 1 - GENERAL

1.1 RELATED DOCUMENTS

A. Drawings and general provisions of the Contract, including General and Supplementary Conditions and other Division 01 Specification Sections, apply to this Section.

1.2 SUMMARY

A. Section includes commissioning process requirements for the following MEP systems, assemblies, and equipment:
   1. HVAC equipment.
   2. Controls and instrumentation, including BAS energy monitoring and control system.

B. Related Requirements:
   1. Section 019113 "General Commissioning Requirements" for general commissioning process requirements and Commissioning Coordinator responsibilities.

1.3 DEFINITIONS

A. Refer to Section 019113 "General Commissioning Requirements" for additional definitions and assignment of responsibilities.

1.4 CONTRACTOR'S RESPONSIBILITIES

A. Refer to Section 019113 "General Commissioning Requirements".

B. **Perform commissioning tests at the direction of the CxA.**

C. Attend construction phase controls coordination meeting.

D. Attend testing, adjusting, and balancing review and coordination meeting.

E. Participate in mechanical systems, assemblies, equipment, and component maintenance orientation and inspection.

F. Provide information requested by the CxA for final commissioning documentation.

G. Provide measuring instruments and logging devices to record test data, and provide data acquisition equipment to record data for the complete range of testing for required test period.

H. Provide Project-specific construction checklists and commissioning process test procedures for actual mechanical systems, assemblies, equipment, and components to be furnished and installed as part of the construction contract.

I. Direct and coordinate commissioning testing among subcontractors, suppliers, and vendors.

J. Verify testing, adjusting, and balancing of Work are complete.

K. Provide test data, inspection reports, and certificates in Systems Manual.

1.5 COMMISSIONING DOCUMENTATION

A. Provide the following information to the CxA for inclusion in the commissioning plan:
   1. Plan for delivery and review of systems manuals, and other documents and reports.
   2. Identification of installed systems, assemblies, equipment, and components including design changes that occurred during the construction phase.
   3. Process and schedule for completing construction checklists and manufacturer's pre-start and startup checklists for mechanical systems, assemblies, equipment, and components to be verified and tested.
   4. Certificate of completion certifying that installation, pre-start checks, and startup procedures have been completed.
   5. Certificate of readiness certifying that mechanical systems, subsystems, equipment, and associated controls are ready for testing.
   6. Test and inspection reports and certificates.
   7. Corrective action documents.
   8. Verification of testing, adjusting, and balancing reports.

1.6 INFORMATIONAL SUBMITTALS

A. Construction Checklists: See related Sections for technical requirements, and generate construction checklists for the following:
   1. Instrumentation and control for MEP systems.
   2. Chiller plant, fans, air-handling units, and exhaust fans.

B. Certificates of readiness.

C. Certificates of completion of installation, pre-start, and startup activities.

PART 2 - PRODUCTS (Not Used)

PART 3 - EXECUTION

3.1 GENERAL REQUIREMENTS

A. Refer to Section 019113 "General Commissioning Requirements".

3.2 SYSTEMS READINESS CHECKLISTS

A. Construction Checklists: Assist CxA in the preparation of detailed Systems Readiness checklists for systems, subsystems, equipment, and components.
   1. Contributors to the development of checklists shall include, but are not limited to:
      a. Systems and equipment installers.

b. TAB technicians.
c. Instrumentation and controls installers.

B. Contractor shall conduct Systems Readiness Testing to document compliance with installation and Systems Readiness checklists prepared by Commissioning Authority for Division-23 items.

C. Refer to Section 019113 "General Commissioning Requirements" for issues relating to Systems Readiness checklists and testing, description of process, details on non-conformance issues relating to pre-functional checklists and test.

3.3 SYSTEM START-UP

A. Contractor is solely responsible for system start-up. CxA may, at his discretion, witness start up procedures, but will not perform any Functional Testing of systems until Contractor has completed start-up and resolved all operating deficiencies.

3.4 TESTING PREPARATION

A. Certify that systems, subsystems, and equipment have been installed, calibrated, and started and are operating according to the Contract Documents.

B. Certify that instrumentation and control systems have been completed and calibrated, that they are operating according to the Contract Documents and approved Shop Drawings and submittals, and that pretest set points have been recorded.

C. Certify that TAB procedures have been completed and that TAB reports have been submitted, discrepancies corrected, and corrective work approved.

D. Set systems, subsystems, and equipment into operating mode to be tested according to approved test procedures (e.g., normal shutdown, normal auto position, normal manual position, unoccupied cycle, emergency power, and alarm conditions).

3.5 TESTING AND BALANCING VERIFICATION

A. Prior to performance of testing and balancing Work, provide copies of reports, sample forms, checklists, and certificates to the CxA.

B. Provide technicians, instrumentation, and tools to verify testing and balancing of mechanical systems at the direction of the CxA.
1. The CxA will notify Contractor 4 days in advance of the date of field verification. Notice will not include data points to be verified.
2. The testing and balancing Subcontractor shall use the same instruments (by model and serial number) that were used when original data were collected.
3. Failure of an item includes a deviation of more than 10 percent. Failure of more than 10 percent of selected items shall result in rejection of final testing, adjusting, and balancing report.
4. Remedy deficiency and notify CxA so verification of failed portions can be performed.

3.6 GENERAL TESTING REQUIREMENTS

A. Provide technicians, instrumentation, and tools to perform commissioning test at the direction of the CxA.

B. Scope of mechanical testing shall include entire HVAC installation, from equipment through distribution systems to each space served. Testing shall include measuring capacities and effectiveness of operational and control functions.

C. Test all operating modes, interlocks, control responses, and responses to abnormal or emergency conditions, and verify proper response of building automation system controllers and sensors.

D. Tests will be performed using design conditions whenever possible.

E. Simulated conditions may need to be imposed using an artificial load when it is not practical to test under design conditions. Before simulating conditions, calibrate testing instruments. Provide equipment to simulate loads. Set simulated conditions as directed by the Contracting Officer and document simulated conditions and methods of simulation. After tests, return settings to normal operating conditions.

F. The CxA may direct that set points be altered when simulating conditions is not practical.

G. The CxA may direct that sensor values be altered with a signal generator when design or simulating conditions and altering set points are not practical.

H. If tests cannot be completed because of a deficiency outside the scope of the mechanical system, document the deficiency and report it to the Owner. After deficiencies are resolved, reschedule tests.

I. If the testing plan indicates specific seasonal testing, complete appropriate initial performance tests and documentation and schedule seasonal tests.

3.7 GENERAL TESTING PROCEDURES FOR HVAC SYSTEMS, SUBSYSTEMS, AND EQUIPMENT

A. HVAC Instrumentation and Control System Testing: Contractor shall fully test operation of controls system prior to requesting Functional Testing with CxA. Point-to-point check out sheets and as-built control diagrams shall be provided to CxA so he may develop testing procedures.

B. HVAC Distribution System Testing: Provide technicians, instrumentation, tools, and equipment to test performance of air distribution systems; special exhaust; and other distribution systems, including HVAC terminal equipment and unitary equipment.

3.8 FUNCTIONAL TEST PROCEDURES FOR SYSTEMS TO BE COMMISSIONED

A. General

1. The following paragraphs outline the functional test procedures for the various Div. 23 items to be commissioned. Functional testing will take place only after System Readiness

checklists have been completed, equipment has been started-up, TAB has been verified, and Contractor has certified that systems are ready for functional testing.

2. All systems controlled via the Building Automation System shall have all control points and sequences tested by Controls Contractor prior to requesting testing by CX Authority.
3. Functional testing of HVAC systems shall include testing of the BAS.

B. All Equipment:
1. Verify nameplate information (serial numbers, model numbers, etc.); verify that equipment capacity is in accordance with requirements of construction documents.
2. Verify unit runs smoothly and quietly.
3. Verify operation of safeties.
4. Verify electrical wiring and grounding is correct.
5. Verify maintenance and NEC clearances are maintained.
6. Verify Systems Readiness Checklists have been completed.

3.9 COMMISSIONING TESTS

A. Functional testing will be performed on all HVAC equipment, including but limited to the following:
1. Chiller plant
2. DOAS, RTUs
3. Air distribution system
4. Building automation system
5. Exhaust fans

B. Sample requirements are as follows:
1. Record temperatures, pressures.
2. Record programmed setpoints (unocc/occ temperature, RH, CO2, runtime, safeties, alarms).
3. Record programmed schedules and interlocks.
4. Verify equipment installation
5. Verify equipment operation.
6. Verify electrical voltage and amperages are within tolerance.
7. Verify unit data in TAB report.
8. Verify alarms and safeties.
9. Verify all sequences.
10. Verify setpoint resets, adaptive controls for energy conservation.

C. Customized system readiness checklists and function testing requirements will be released after the submittal review phase.

3.10 TRAINING AND O&M MANUALS

A. Refer to Div. 23 specifications.

END OF SECTION 230800

SECTION 230900 – INSTRUMENTATION AND CONTROLS

PART 1 - GENERAL

1.1 RELATED DOCUMENTS

A. Drawings and general provisions of the Contract, including General and Supplementary Conditions and Division 1 Specification Sections, apply to this Section.

1.2 SUMMARY

A. Section Includes:
   1. Design Intent is to get Full-DDC controls for all new and replacement equipment, that is fully integrated and fully accessible via the web.
   2. Coordinate with equipment manufacturer, and integrate controls as needed to ensure that all safeties and warranties are retained. BACnet interface will be used to monitor all alarms and parameters from the unitary controllers.

B. Related Requirements:
   1. Section 230993 "Sequence of Operations for HVAC Controls" for control sequences in DDC systems.

1.3 CODE REQUIREMENTS

A. All equipment and material and its installation shall conform to the current requirements of the following authorities, and local amendments:
   1. Occupational Safety and Health Act (OSHA)
   2. International Electric Code (IEC)
   3. International Fire Code
   4. International Building Code
   5. International Mechanical Code
   6. International Plumbing Code
   7. International Energy Conservation Code
   8. UL 916

B. Where two or more codes conflict, the most restrictive shall apply. Nothing in these specifications shall be construed to permit work not conforming to applicable codes.

1.4 ACTION SUBMITTALS

A. All submittals must be in native PDF format, wherein all text is searchable. Submittals which contain scanned documents which are not 'searchable' will be rejected without being reviewed.

B. Product Data: For each type of product include the following:
   1. Construction details, material descriptions, dimensions of individual components and profiles, and finishes.
   2. Operating characteristics, electrical characteristics, and furnished accessories indicating process operating range, accuracy over range, control signal over range, default control signal with loss of power, calibration data specific to each unique application, electrical

power requirements, and limitations of ambient operating environment, including temperature and humidity.

3. Product description with complete technical data, performance curves, and product specification sheets.
4. Bill of materials of indicating quantity, manufacturer, and extended model number for each unique product.
5. When manufacturer's product datasheets apply to a product series rather than a specific product model, clearly indicate and highlight only applicable information.
6. Each submitted piece of product literature shall clearly cross reference specification and drawings that submittal is to cover.

C. System Description:

1. Full description of DDC system architecture, network configuration, operator interfaces and peripherals, servers, controller types and applications, gateways, routers and other network devices, and power supplies.
2. General Requirements:
   a. Include cover drawing with Project name, location, Owner, Engineer, Contractor and issue date with each Shop Drawings submission.
   b. Include a drawing index sheet listing each drawing number and title that matches information in each title block.

3. Schematic drawings for each controlled HVAC system indicating the following:
   a. I/O points labeled with point names shown. Indicate instrument range, normal operating set points, and alarm set points. Indicate fail position of each damper and valve, if included in Project.
   b. I/O listed in table format showing point name, type of device, manufacturer, model number, and cross-reference to product data sheet number.
   c. A graphic showing location of control I/O in proper relationship to HVAC system.
   d. Wiring diagram with each I/O point having a unique identification and indicating labels for all wiring terminals.
   e. Unique identification of each I/O that shall be consistently used between different drawings showing same point.
   f. Elementary wiring diagrams of controls for HVAC equipment motor circuits including interlocks, switches, relays and interface to DDC controllers.
   g. Narrative sequence of operation.

      1) Contractor is expected to review all specified sequences and submit questions concerning any ambiguities, potential errors or omissions, prior to turning in submittals. Submittals which simply restate control sequences as written in specifications are not acceptable. Submittals must include a restatement of sequences as they will actually be programmed.

4. DDC system network riser diagram; indicate each device connected to network with unique identification for each, communication protocol, speed and physical means of interconnecting network devices, such as copper cable type, or fiber-optic cable, network port(s) for connection of an operator workstation or other type of operator interface, etc.
5. Color graphics.
   a. Submit samples and an itemized list of ALL the various graphics pages being proposed for control system. Show layout of pictures, graphics and data displayed, navigation icons, etc.
   b. Graphics for equipment must be schematically correct versus equipment as actually installed (e.g., all sensors, coils, devices, shown in correct locations &

sequential order). In all cases, the graphics must be cross-checked with the engineering drawings.

c. Engineer's approval of submitted sample graphics pages represents preliminary approval and does not preclude the possibility that graphics' deficiencies may be found in subsequent testing and inspections.

D. Software Submittal:

1. Cross-referenced listing of software to be loaded on each operator workstation, server, gateway, and DDC controller.
2. Description and technical data of all software provided and cross-referenced to products in which software will be installed.
3. Operating system software, operator interface and programming software, color graphic software, DDC controller software, maintenance management software, and third-party software.
4. Include a flow diagram and an outline of each subroutine that indicates each program variable name and units of measure.
5. Listing and description of each engineering equation used with reference source.
6. Listing and description of each constant used in engineering equations and a reference source to prove origin of each constant.
7. Description of operator interface to alphanumeric and graphic programming.
8. Description of each network communication protocol.
9. Description of system database, including all data included in database, database capacity and limitations to expand database.
10. Description of each application program and device drivers to be generated, including specific information on data acquisition and control strategies showing their relationship to system timing, speed, processing burden and system throughout.
11. Controlled Systems: Instrumentation list with element name, type of device, manufacturer, model number, and product data. Include written description of sequence of operation including schematic diagram.

1.5 INFORMATIONAL SUBMITTALS

A. All submittals must be in native PDF format, wherein all text is searchable. Submittals which contain scanned documents which are not 'searchable' will be rejected without being reviewed.

B. Coordination Drawings: Plan drawings and corresponding product installation details, drawn to scale, on which the following items are shown and coordinated with each other, using input from installers of the items involved.

C. Systems Provider Qualification Data: Resume of project manager, installation and programming technician, and service technicians assigned to Project, including name, phone number, and e-mail address.

D. Product Certificates: Data Communications Protocol Certificates: Certifying that each proposed DDC system component complies with ASHRAE 135.

1.6 CLOSEOUT SUBMITTALS

A. As-built record documentation per section 017700 – Closeout Procedures.

B. Operation and Maintenance Data: For DDC system to include in emergency, operation, and maintenance manuals.

1. In addition to items specified in Section 017823 "Operation and Maintenance Data," include the following:
   a. Names, addresses, e-mail addresses and 24-hour telephone numbers of Installer and service representatives for DDC system and products.
   b. Operator's manual with procedures for operating control systems including logging on and off, handling alarms, producing point reports, trending data, overriding computer control, and changing set points and variables.
   c. Programming manuals with description of programming language and syntax, of statements for algorithms and calculations used, of point database creation and modification, of program creation and modification, and of editor use.
   d. Engineering, installation, and maintenance manuals.
   e. Documentation of all programs created using custom programming language including set points, tuning parameters, and object database.
   f. Backup copy of graphic files, programs, and database in electronic media form.
   g. List of recommended spare parts with part numbers and suppliers.
   h. Complete original-issue documentation, installation, and maintenance information for furnished third-party hardware including computer equipment and sensors.
   i. Complete original-issue copies of furnished software, including operating systems, custom programming language, operator workstation software, and graphics software.
   j. Licenses, guarantees, and warranty documents.
   k. Recommended preventive maintenance procedures for system components, including schedule of tasks such as inspection, cleaning, and calibration; time between tasks; and task descriptions.
   l. Owner training materials and evidence of the training provided to the owner`s staff.
   m. For all BACnet-connected devices, on a separate dedicated page, document only selected points readable BACnet points.

1.7 MAINTENANCE MATERIAL SUBMITTALS

A. Furnish extra materials and parts that match products installed and that are packaged with protective covering for storage and identified with labels describing contents.

B. Include product manufacturers' recommended parts lists for proper product operation over five-year period following warranty period. Parts list shall be indicated for each year.

1.8 COORDINATION

A. Coordinate location of thermostats, humidistats, and other exposed control sensors with plans and room details before installation.

B. Coordinate supply of conditioned electrical circuits for control units.

C. Coordinate equipment with Division 16 Section "Panelboards".

1.9 PAYMENTS

A. 10% of controls cost will be withheld until documentation is provided that the Commissioning and Acceptance Test was carried out, and that it was verified by Engineer.

B. 5% of controls cost will be withheld until documentation is provided that the Training was carried out, and that it was acceptable by the Owner.

1.10 CONTRACTOR RESPONSIBILITY

A. All control items, services, and work shown in specifications and drawings shall be provided by Controls Contractor either directly or by subcontract. These shall include, but are not necessarily limited to, the following:
   1. Install control equipment incorporating DDC for energy management, equipment monitoring and control, software, programming, including color graphic workstations.
   2. Provide control relays and devices, air flow monitoring devices, pressure and temperature sensing devices, valves, dampers and actuators (unless noted elsewhere in construction documents that they are to be provided by others), etc.
   3. Provide electrical work associated with control system and as called for on Drawings. Perform all wiring in accordance with all local and national codes. Provide all line voltage wiring, concealed or exposed, in accordance with Div. 26. All low voltage electrical control wiring throughout the building when exposed shall be run in conduit in accordance with Division 26. All low voltage wiring run in concealed accessible areas shall be run using plenum rated wire only.
   4. Provide 120V power for direct digital control systems PCU's, and LCU's, as defined later in these specifications, and make final panel hook-up and all final electrical connections to each controller. Provide power for all valve, and damper-actuators.
      a. Power circuit to PCU/LCU shall serve PCU/LCU and no other equipment.
      b. Use spares or provide new circuit breaker.
   5. Use spare circuit breakers or provide new where no spares exist.
   6. Provide all wiring and conduit for all DDC temperature controls, monitoring devices including DDC signal wiring.
   7. Provide all control relays. Where motor starters are not called for or do not exist for 1-phase equipment, provide relays and contactors as required for start/stop control by BAS.
   8. Provide surge transient protection shall be incorporated in design of system to protect electrical components in all primary control units.
   9. Provide all warranty related work, products, materials, and labor.
   10. Provide all software programming.
   11. Provide consulting and programming services to Owner and Installing Contractor as required to resolve operating problems after system installation.
   12. Provide shop drawings indicating equipment locations, points allocation, and schematic wiring. Submittals shall indicate all information pertinent to PCU locations, PCU capacity and spare points, input/output module configuration within PCUs, communication trunks, sensors, valves, pneumatic interface, wiring, and other pertinent equipment information requiring approval prior to field installation. Provide a DDC system riser diagram showing buildings, controller or device within each building, and listing equipment controlled or monitored by each.
   13. Provide graphics programming, showing floor plans of all buildings, equipment locations, and operating parameters.
   14. Provide self-commissioning of system.
   15. Provide reference manuals.
   16. Provide Owner training.
   17. Warranty work.
   18. Other services, materials, and products as called for in construction documents.

B. The following equipment and services shall be coordinated with the Owner:
   1. Network connections.

C. Coordinate with Mechanical Contractor. Mechanical Contractor provides:
   1. Installation of control valves, control dampers, actuators and all manual dampers.
   2. Temporary 24V thermostat for new equipment, if required.
   3. Fan coil units with factory-installed dampers (where indicated).
   4. Rooftop / AH units with factory-installed outside air damper actuator and controls.

1.11 QUALITY ASSURANCE

A. DDC System Manufacturer Qualifications:
   1. Nationally recognized manufacturer of DDC systems and products.
   2. DDC systems with similar requirements to those indicated for a continuous period of ten years within time of bid.
   3. Having complete published catalog literature, installation, operation and maintenance manuals for all products intended for use.
   4. Having full-time in-house employees for the following:
      a. Product research and development.
      b. Product and application engineering.
      c. Product manufacturing, testing and quality control.
      d. Technical support for DDC system installation training, commissioning and troubleshooting of installations.
      e. Owner operator training.

B. DDC System Provider / Installer Qualifications:
   1. A direct factory owned office of the manufacturer, for the brand or make of control equipment to be supplied, with engineers capable of providing instructions, routine maintenance, design services, programming, and emergency system service on staff.
   2. Project supervisor and programmers shall be DDC system manufacturer employees. Only construction services not directly related to DDC system operation (such as provision of electrical power, conduit installation and wire-pulling, etc.) may be subcontracted to non-manufacturer workers.
   3. A manufacturer's employee working on this project shall be officed within 40 miles of Project and assigned to support Project during warranty period.
   4. Each manufacturer employee assigned to Project shall be a competent and experienced full-time employee with demonstrated past experience on at least 5 projects of similar complexity, scope and value.

1.12 WARRANTY

A. Manufacturer's Warranty: Manufacturer and Installer agree to repair or replace products that fail in materials or workmanship within specified warranty period.
   1. Failures shall be adjusted, repaired, or replaced at no additional cost or reduction in service to Owner.
   2. Include updates or upgrades to software and firmware if necessary to resolve deficiencies.
      a. Install updates only after receiving Owner's written authorization.
   3. Warranty service shall occur during normal business hours and commence no later than 8 hours following Owner's warranty service request.
   4. Warranty Period: **Two years from date of final system acceptance**.
      a. Final Acceptance of system is not related to nor dependent upon Substantial Completion. **Final system acceptance will be granted only after system is**

operating without any substantive problems for a minimum of 30 consecutive days, and all issues on Commissioning Issues Log and Engineer's punch lists have been resolved.

b. Obtain formal written approval from Engineer and Owner contractual date of system Final Acceptance. Determination of final system acceptance date is at Engineer's discretion, in coordination with input from commissioning agent

B. Warranty Inspections
1. At approximately 12 months and 24 months after Final Acceptance of control system, provide a minimum 5 hour on-site inspection of system.
2. Inspection will include an evaluation of performance of the system, including an accuracy of all sensors (re-calibration or replacement is required for sensors obviously inaccurate), solicitation of operator's input of system problems and inadequacies, review of operating sequences and alarm logs to discover potential recurring problems or nuisances, discovery of any failed points, and general system reliability.
3. **Provide a written report of each site visit summarizing activities and findings, and recommendations for improving system performance.**
4. **Failure to provide the on-site inspections at a time near that specified, or by the end of Warranty, regardless of whether specifically requested by owner, does not relieve contractor of obligation to provide such inspections.** Within a period of 5 years after system Final Acceptance, should owner request contractor provide a system inspection that *was not provided* within the 24 months period after Final Acceptance, contractor will provide such inspection in compliance with subparagraphs 2 and 3 above. Any and all control system deficiencies found are to be remedied as warranty items.

1.13 EXTRA MATERIALS

A. Furnish quantity indicated of matching product(s) in Project inventory **for each unique size and type** of following:
1. Room Relative Humidity Sensor and Transmitter: Five.
2. Adjustable Range Room Temperature Sensors: Five.
3. CO2 sensor: Five.
4. Current-Sensing Relay: Five.

1.14 EQUIPMENT AND SOFTWARE UPDATES / UPGRADES / REVISIONS

A. Equipment: All equipment, components, parts, materials, etc. provided shall be fully compatible with all other equipment provided at any other time throughout the warranty period. Should updated versions be provided that are not fully compatible with earlier equipment provided (e.g.: a requirement to add hardware or software "interfacing" between an earlier and later generation results in the system not being fully compatible), Controls contractor shall replace earlier equipment with the later version at no cost to Owner.

B. Software: If acceptable to the Owner, all software upgrades applicable to the system and offered by the manufacturer / contractor for this system shall be provided at no cost to the Owner throughout the warranty period. This no cost upgrade shall include installation, programming, modification to field equipment, data base revisions, etc. all as appropriate.

C. Revisions: Hardware / software revisions made related to refining sequences of control, adding/monitoring control points, or other similar operations shall be made with all "burn-in" performed at the contractor's expense, throughout the warranty period.

PART 2 - PRODUCTS

2.1 MANUFACTURERS

A. Following Manufacturer's are allowed to bid on this project:
   1. Johnson Controls
   2. ALC
   3. Trane
   4. Other manufacturers shall obtain written authorization to bid from Owner.

2.2 DDC SYSTEM DESCRIPTION

A. Modular, microprocessor-based, high-speed, peer-to-peer network of distributed DDC controllers, operator interfaces, and software monitoring and control, including analog/digital conversion and program logic, utilizing stand-alone controllers operating over a local area network allowing peer-to-peer communication among all system controllers, and communications interface to Owner's Central Operator's Station.

B. Electrical Components, Devices, and Accessories: Listed and labeled as defined in NFPA 70, by a qualified testing agency, and marked for intended location and application.

2.3 WEB ACCESS

A. DDC system shall be Web based.
   1. DDC system software shall be based on server thin-client architecture, designed around open standards of Web technology. DDC system server shall be accessed using a Web browser over DDC system network, using Owner's LAN, and remotely over Internet.
   2. Intent of thin-client architecture is to provide operators complete access to DDC system via a Web browser. No special software other than a Web browser shall be required to access graphics, point displays, and trends; to configure trends, points, and controllers; and to edit programming.
   3. Web-Compatible Access to DDC System:
      a. Operator workstation and server shall perform overall system supervision and configuration, graphical user interface, management report generation, and alarm annunciation.
      b. DDC system shall support Web browser access to building data. Operator using a standard Web browser shall be able to access control graphics and change adjustable set points.
      c. Web access shall be password protected

2.4 PERFORMANCE REQUIREMENTS

A. Network Bandwidth: Design each network of DDC system to include at least 30 percent available spare bandwidth with DDC system operating under normal and heavy load conditions indicated. Calculate bandwidth usage and apply a safety factor to ensure that requirement is satisfied when subjected to testing under worst case conditions.

B. System Response Time:
   1. Graphic display refresh shall update within eight seconds.
   2. AI point value shall update within 5 seconds, BI point values within 10 seconds.
   3. AO and BO points shall begin to respond to controller output commands within three second(s).

4. Alarms of analog and digital points connected to DDC system shall be displayed within 15 seconds of activation or change of state.
5. Global commands shall also comply with this requirement.

C. Future Expandability:
1. DDC system size shall be expandable to an ultimate capacity of at least four times total I/O points indicated.
2. Additional DDC controllers, I/O and associated wiring shall be all that is needed to achieve ultimate capacity. Initial network infrastructure shall be designed and installed to support ultimate capacity.
3. Operator interfaces installed initially shall not require hardware and software additions and revisions for ultimate capacity.

D. Environmental Conditions for Controllers, Gateways, and Routers:
1. Products, instruments, and actuators shall operate without performance degradation under the ambient environmental temperature, pressure, humidity, and vibration conditions specified and encountered for installed location.
   a. If product alone cannot comply with requirement, install product in a protective enclosure that is isolated and protected from conditions impacting performance. Enclosure shall be internally insulated, electrically heated, cooled and ventilated as required by product and application.

2. Products shall be protected with enclosures satisfying the following minimum requirements unless more stringent requirements are indicated. Products not available with integral enclosures complying with requirements indicated shall be housed in protective secondary enclosures. Installed location shall dictate the following NEMA 250 enclosure requirements:
   a. Outdoors, Protected: Type 3.
   b. Outdoors, Unprotected: Type 4X.
   c. Indoors, Heated with Ventilation: Type 2.
   d. Indoors, Heated and Air Conditioned: Type 1.
   e. Unconditioned Chiller and Boiler Rooms: Type 4X.
   f. Conditioned Mechanical Equipment Rooms: Type 1.
   g. Air-Moving Equipment Rooms: Type 1.
   h. Localized Areas Exposed to Washdown: Type 4X.

E. Electric Power Quality:
   a. Protect DDC system products connected to ac power circuits from power-line surges to comply with requirements of IEEE C62.41. Do not use fuses for surge protection.
2. Ground Fault: Protect products from ground fault by providing suitable grounding. Products shall not fail due to ground fault condition.
3. Power Conditioning:
   a. Protect DDC system products connected to ac power circuits from irregularities and noise rejection. Characteristics of power-line conditioner shall be as follows:
   b. At 85 percent load, output voltage shall not deviate by more than plus or minus 1 percent of nominal when input voltage fluctuates between minus 20 percent to plus 10 percent of nominal.
   c. During load changes from zero to full load, output voltage shall not deviate by more than plus or minus 3 percent of nominal.
   d. Accomplish full correction of load switching disturbances within five cycles, and 95 percent correction within two cycles of onset of disturbance.
   e. Total harmonic distortion shall not exceed 3-1/2 percent at full load.

F. UPS: Provide UPS power protection for Servers, and DDC controllers (except application-specific controllers), and Gateways.

G. Continuity of Operation after Electric Power Interruption: Equipment and associated factory-installed controls, field-installed controls, electrical equipment, and power supply connected to building normal and backup power systems shall automatically return equipment and associated controls to operating state occurring immediately before loss of normal power, without need for manual intervention by operator when power is restored either through backup power source or through normal power if restored before backup power is brought online.

2.5 PANEL-MOUNTED, MANUAL OVERRIDE SWITCHES

A. Manual Override of Control Dampers:
   1. Include panel-mounted, two-position, selector switch for each automatic control damper being controlled by DDC controller. Label each switch with damper designation served by switch, and switch positions to indicate either "Manual" or "Auto" control signal to damper. With switch in "Auto" position signal to control damper actuator shall be control loop output signal from DDC controller.
      a. For Binary Control Dampers: Manual two-position switch shall have "Close" and "Open" switch positions indicated. With switch in "Close" position, damper shall close. With switch in "Open" position, damper shall open.
      b. For Analog Control Dampers: A gradual switch shall have "Close" and "Open" switch limits indicated. Operator shall be able to rotate switch knob to adjust damper to any position from close to open.

   2. DDC controller shall monitor and report position of each manual override selector switch. With switch placed in "manual" position, DDC controller shall signal an override condition to alert operator that damper is under manual, not automatic, control.

2.6 SYSTEM ARCHITECTURE

A. System architecture shall consist of no more than two levels of LANs.
   1. Level one LAN shall connect network controllers and operator workstations.
   2. Level two LAN shall connect application-specific controllers to application-specific controllers.

B. Minimum Data Transfer and Communication Speed:
   1. LAN Connecting Operator Workstations and Network Controllers: 100 Mbps.
   2. LAN Connecting Programmable Application Controllers: 1000 kbps.
   3. LAN Connecting Application-Specific Controllers: 19,200 bps.

C. DDC system shall consist of dedicated LANs that are not shared with other building systems and tenant data and communication networks.

D. System architecture shall be modular and have inherent ability to expand to not less than three times system size indicated with no impact to performance indicated.

E. Number of LANs and associated communication shall be transparent to operator. All I/O points residing on any LAN shall be capable of global sharing between all system LANs.

F. System design shall eliminate dependence on any single device for system alarm reporting and control execution. Each controller shall operate independently by performing its' own control, alarm management and historical data collection.

G. Special Network Architecture Requirements:
1. Air-Handling Systems: For control applications of an air-handling system that consists of air-handling unit(s) and VAV terminal units, include a dedicated LAN of application-specific controllers serving VAV terminal units connected directly to controller that is controlling air-handling system air-handling unit(s).

2.7 DDC SYSTEM OPERATOR INTERFACES

A. Operator Means of System Access: Operator shall be able to access entire DDC system through any of multiple means, including, but not limited to, the following:
1. Desktop and portable operator workstation with hardwired connection through LAN port.
2. Portable operator terminal with hardwired connection through LAN port.
3. Portable operator workstation with wireless connection through LAN router.
4. PDA with wireless connection through LAN router.
5. Remote connection using outside-of-system computer or PDA through Web access.

B. Access to system, regardless of operator means used, shall be transparent to operator.

C. Network Ports: For hardwired connection of desktop or portable operator workstation. Network port shall be easily accessible, properly protected, and clearly labeled.

D. Desktop and Portable Workstations:
1. Connect to DDC system Level one LAN through a communications port directly on LAN or through a communications port on a DDC controller.
2. Able to communicate with any device located on any DDC system LAN.
3. Able to communicate remotely with any device connected to any DDC system LAN.
4. Connect to DDC system sub-LANs through a communications port on an application-specific controller, or a room temperature sensor connected to an application-specific controller.
5. Monitor, program, schedule, adjust set points, and report capabilities of I/O connected anywhere in system.

E. Personal Digital Assistant:
1. Connect to system through a wireless router connected to LAN.
2. Able to communicate with any DDC controller connected to DDC system.

F. Critical Alarm Reporting:
1. Operator-selected critical alarms shall be sent by DDC system to notify operator of critical alarms that require immediate attention. System shall send alarm notification to multiple recipients that are assigned for each alarm.
2. Alarms must be set to observe proper time delays and other logic to avoid nuisance tripping.
3. **Coordinate with Owner's representatives to set up Owner's desired alarm notification procedures and methodologies by means including e-mail, text message and pre-recorded phone message to mobile and landline phone numbers.**
4. Any alarm that registers and appears in alarm history or event viewer history must have clear description of what the alarm is and the name equipment.
5. Any alarm that is created by a BACnet signal from controlled/monitored equipment must be read and displayed in alarm history by BAS.
6. Email and text alarm notifications must be sent to designated owner's representatives for any alarm deemed critical by owner or these specifications.
7. Alarms registering must be configured to avoid nuisance and irrelevant alarms, and to avoid repetitive alarm registering with high frequency.

G. Simultaneous Operator Use: Capable of accommodating simultaneous operators that are accessing DDC system through any one of operator interfaces indicated.

2.8 NETWORK COMMUNICATION PROTCOL

A. Network communication protocol(s) used throughout entire DDC system shall be open to public and available to other companies for use in making future modifications to DDC system.

B. ASHRAE 135 Protocol:
1. ASHRAE 135 communication protocol shall be a required protocol used throughout entire DDC system. The Web Server shall support the BACnet Interoperable Building Blocks (BIBBS) for Read (Initiate) and Write (Execute) Services.
2. System shall not require use of gateways except to integrate HVAC equipment and other systems and equipment not required to use ASHRAE 135 communication protocol.
   a. Review manufacturer's communications protocols for all systems with which BAS will integrate, and provide gateways as required to allow full communication, such as, for examples, Modbus Application Protocol Specification V1.1b, LonWorks technology using CEA-709.1-C.

2.9 DESKTOP OPERATOR WORKSTATIONS

A. Not Applicable. Use Owner's existing.

2.10 PORTABLE OPERATOR WORKSTATIONS

A. Not Applicable. Use Owner's existing.

2.11 PRINTERS

A. Not Applicable. Use Owner's existing.

2.12 SERVERS

A. Furnish a Web Server to allow daily operations functions, using real-time system data, to be accomplished from any network connected web browser, from within the facility or in remote locations throughout the world.

B. Servers shall include software license(s), and CAT-5e or CAT-6 cable installation between server(s) and network.

C. Operators shall be able to utilize any commercially available browser such as Microsoft Internet Explorer or Netscape Navigator. No additional software shall have to be installed on the client PC for normal operation of the system.

D. All communications between the web browser and web server shall be encrypted using 128 bit SSL encryption.

E. Web server shall be able to be located on the Owner's Intranet or on the Internet.

F. Web server shall have the ability to automatically obtain an IP (Internet Protocol) address using DHCP. Use of static IP addressing shall also be supported.

G. Web server will have adequate capacity to store and serve 500 user defined graphics, and to archive not less than 12 consecutive months of historical data for all I/O points connected to system, including alarms, event histories, transaction logs, trends and other information indicated.

H. Server(s) shall use IT industry-standard database platforms such as Microsoft SQL Server and Microsoft Data Engine (MSDE). The Web browser client shall support Sun Microsystems Java 2 (JRE 1.4.0 or higher) plug-in.

I. Functionality:
   1. A minimum of 30 users shall be able to utilize the system device at the same time. Operators with proper security shall be able to:
      a. View graphical information about a facility, change setpoints, perform overrides.
      b. View and change schedules.
      c. View and acknowledge alarms.
      d. View historical information.

   2. Operators must enter in a valid unique user name and password to access the system.
   3. Operator security: The Web server shall include industry standard security protocols to prohibit access by unauthorized users over the World Wide Web. Provide firewalls between server Web and networks with password protection for access to server from Web server.
   4. The web server shall display the same graphics that have been created for the Operators Workstation.
   5. Operators with proper access shall be able to configure the web server using their web browser.

J. Web Server Hardware.
   1. Provide a solid-state web server. This device may not contain any moving parts including but not limited to cooling fans, disk drives, CD Rom drives etc.
   2. All user entered information (web pages, security, etc.) shall be stored in non-volatile memory. System operational information and clock functions shall be backed up by battery or other device for a minimum of 72 hours.

2.13 SYSTEM SOFTWARE

A. System Software Minimum Requirements:
   1. Provide all software required for efficient operation of all the automatic system functions required by this specification. Software shall be modular in design for flexibility in expansion or revision of the system. It is the intent of this specification to require provisions of a system which can be fully utilized by individuals with no, or limited, previous exposure to PC's and programming techniques and languages.
   2. The software in the system shall consist of both "firmware" resident in the PCU's and "software" resident in the operator work stations. The architecture of the system, and the application software/firmware shall be distributed with no single system component responsible for a control function for the entire Controller LAN. Each PCU shall contain the necessary firmware and I/O capability to function independently in case of a network failure. No active energy management or environmental control sequences shall be resident in the PC work stations. All PC work stations shall be removable from the system without loss of control function - only alarm monitoring, long term history collection, and operator monitor/command/edit functions would be lost.
   3. Software: **All software upgrades applicable to the system and offered by the manufacturer / contractor for this system shall be provided at no cost to the Owner**

throughout the warranty period. This no-cost upgrade shall include installation, programming, modification to field equipment, data base revisions, etc. all as appropriate.

4. Real-time multitasking and multiuser 32- or 64-bit operating system that allows concurrent multiple operator workstations operating and concurrent execution of multiple real-time programs and custom program development.
5. Operating system shall be capable of operating DOS and Microsoft Windows applications.
6. Database management software shall manage all data on an integrated and non-redundant basis. Additions and deletions to database shall be without detriment to existing data. Include cross linkages so no data required by a program can be deleted by an operator until that data have been deleted from respective programs.
7. Network communications software shall manage and control multiple network communications to provide exchange of global information and execution of global programs.
8. Operator interface software shall include day-to-day operator transaction processing, alarm and report handling, operator privilege level and data segregation control, custom programming, and online data modification capability.
9. Scheduling software shall schedule centrally based time and event, temporary, and exception day programs.

B. Basic Interface Description

1. Operator workstation interface software shall minimize operator training through the use of English language prompting, English language point identification and industry standard PC application software. The software shall provide, as a minimum, the following functionality: a. Graphical viewing and control of environment
2. Scheduling and override of building operations
3. Collection and analysis of historical data
4. Definition and construction of dynamic color graphic displays
5. Editing, programming, storage and downloading of controller databases
6. Provide a graphical user interface which shall minimize the use of a typewriter style keyboard through the use of a mouse or similar pointing device and "point and click" approach to menu selection. Users shall be able to start and stop equipment or change setpoints from graphical displays through the use of a mouse or similar pointing device.
   a. Provide functionality such that all operations can also be performed using the keyboard as a backup interface device.
   b. Provide additional capability that allows at least 10 special function keys to perform often used operations.
7. The software shall provide a multi-tasking type environment that allows the user to run several applications simultaneously. The mouse shall be used to quickly select and switch between multiple applications. This shall be accomplished through the use of Microsoft Windows or similar industry standard software that supports concurrent viewing and controlling of systems operations. a. Provide functionality such that any of the following may be performed simultaneously, and in any combination, via user-sized windows:
   a. Dynamic color graphics and graphic control
   b. Alarm management coordinated with section 2.04.E.
   c. Time-of-day scheduling
   d. Trend data definition and presentation
   e. Graphic definition
   f. Graphic construction
8. If the software is unable to display several different types of displays at the same time, the EMS contractor shall provide at least two operator workstations.

9. Multiple-level password access protection (minimum of five levels of access) shall be provided to allow the user/manager to limit workstation control, display and data base manipulation capabilities as he deems appropriate for each user, based upon an assigned password.
   a. Level 1 = View all applications, but perform no database modifications
   b. Level 2 = Custodial privileges plus the ability to acknowledge alarms
   c. Level 3 = All privileges except system configuration
   d. Level 4 = All configuration privileges except passwords
   e. Level 5 = All privileges

10. A minimum of 50 unique passwords, including user initials, shall be supported.
11. Operators will be able to perform only those commands available for their respective passwords. Menu selections displayed shall be limited to only those items defined for the access level of the password used to log-on.
   a. The system shall automatically generate a report of log-on/log-off time and system activity for each user.
   b. User-definable, automatic log-off timers of from 5 to 60 minutes shall be provided to prevent operators from inadvertently leaving devices on-line.

12. Software shall allow the operator to perform commands including, but not limited to, the following:
   a. Start-up or shutdown selected equipment
   b. Adjust setpoints
   c. Add/modify/delete time programming
   d. Enable/disable process execution
   e. Lock/unlock alarm reporting for points
   f. Enable/disable totalization for points
   g. Enable/disable trending for points
   h. Override PID loop setpoints
   i. Enter temporary override schedules
   j. Define holiday schedules
   k. Change time/date
   l. Automatic daylight savings time adjustments
   m. Enter/modify analog alarm limits
   n. Enter/modify analog warning limits
   o. View limits
   p. Enable/disable demand limiting for each meter
   q. Enable/disable duty cycle for each load

C. Reports and Logs:
   1. Reports shall be generated and directed to either CRT displays, printers or disk. As a minimum, the system shall allow the user to easily obtain the following types of reports:
      a. A general listing of all points in the network
      b. List of all points currently in alarm
      c. List of all points currently in override status
      d. List of all disabled points
      e. List of all points currently locked out
      f. DDC Controller trend overflow warning
      g. List all weekly schedules
      h. List of holiday programming
      i. List of limits and deadbands.
      j. Summaries shall be provided for specific points, for a logical point group, for a user-selected group or groups or for the entire facility without restriction due to the

hardware configuration of the building automation system. Under no conditions shall the operator need to specify the address of the hardware controller to obtain system information.

2. Include reporting software package that allows operator to select, modify, or create reports using DDC system I/O point data available.
3. Each report shall be definable as to data content, format, interval and date.
4. Report data shall be sampled and stored on DDC controller, within storage limits of DDC controller, and then uploaded to archive on server for historical reporting.
5. Operator shall be able to obtain real-time logs of all I/O points by type or status, such as alarm, point lockout, or normal.
6. Reports and logs shall be stored on [workstation] [and] [server] hard drives in a format that is readily accessible by other standard software applications, including spreadsheets and word processing.
7. Reports and logs shall be readily printed and set to be printed either on operator command or at a specific time each day.

D. Standard Reports: Standard DDC system reports shall be provided and operator shall be able to customize reports later.
1. All I/O: With current status and values.
2. Alarm: All current alarms, except those in alarm lockout.
3. Disabled I/O: All I/O points that are disabled.
4. Alarm Lockout I/O: All I/O points in alarm lockout, whether manual or automatic.
5. Alarm Lockout I/O in Alarm: All I/O in alarm lockout that are currently in alarm.
6. Alarm history.

E. Custom Reports: Operator shall be able to easily define any system data into a daily, weekly, monthly, or annual report.

F. Scheduling:
1. Monthly calendars for a 24-month period shall be provided which allow for simplified scheduling of holidays and special days in advance.
2. Weekly schedules shall be provided for each building zone or piece of equipment with a specific occupancy schedule.
3. Zone schedules shall be provided for each building zone. Each commandable point may have a unique schedule of operation relative to the zone' s occupancy schedule, allowing for sequential starting and control of equipment within the zone.
4. Holidays and special days shall be user-selected with the pointing device and shall automatically reschedule equipment operation.
5. Collection and Analysis of Historical Data
   a. Provide trending capabilities that allow the user to easily monitor and preserve records of system activity over an extended period of time. Any system point may be trended automatically at time-based intervals or changes of value, both of which shall be user definable. Trend data may be stored on hard disk for future diagnostics and reporting.
   b. Trend data report graphics shall be provided to allow the user to view all trended point data. Reports may be customized to include individual points or pre-defined groups of at least 6 points. Provide additional functionality to allow any trended data to be transferred easily to an off-the-shelf spreadsheet package such as Lotus 1-2-3a. This shall allow the user to perform custom calculations such as energy usage, equipment efficiency and energy costs and shall allow for generation of these reports on high-quality plots, graphs and charts.

2.14 GRAPHICS

A. Provide Central Operator's Station with software and hardware as needed to meet requirements specified herein. Graphics are to be online programmable and under password control.

B. System shall be provided with complete color graphics software package, such that graphics can be created by user from time of software installation, without need for additional hardware or software. Each operator work station shall support not less than 1,000 separate graphic pages. Contractor shall include developed graphics as approved by the Owner's representative for this project.

C. Graphics program shall be fully user interactive, full color, incorporating the following capabilities:
   1. Up to 50 dynamic points of data per graphic page
   2. Animated objects for discrete points to illustrate point status
   3. On-line 'draw' utility
   4. Ability to import .PCX or .DXF file format graphics developed in third party programs
   5. "Page Linking" such that it is possible to "zoom" into a specific AHU or any other page through a sequence of graphics without using anything but the system mouse.
   6. Generate, store, and retrieve library symbols for use in generating graphic pages.
   7. Fifty (50) dynamic points of data per graphic page.
   8. Pixel level resolution. Graphics will be displayed on EGA monitors with a 640 X 350 resolution, and on VGA monitors with a 640 X 480 resolution, minimum. Color selections will be made from a color bar consisting of 16 colors, with adjacent text description.
   9. Animated objects for discrete points (i.e., when a pump starts, the pipe fills with water or when a damper shuts it goes closed on the screen).
   10. Analog bar graphs for analog points. The operator shall be able to locate up to 60 bar graphs per graphic page, with options as to bar graph color, dimensions, horizontal/vertical orientation, and limit values.

D. Provide for import of .PCX file format graphics developed in third party programs such as Paintbrush. Such imported graphics shall be used as a "backdrop", so that all other dynamic and animated system features may be superimposed on this graphic. Similarly, it shall be possible to import CAD type drawings, by first converting the CAD drawing from .DXF format to .PCX format.

E. The EMS contractor shall provide libraries of pre-engineered screens and symbols depicting standard air handling unit components (e.g., fans, cooling coils, filters, dampers, etc.), complete mechanical systems (e.g., constant volume-terminal reheat, VAV, etc.) and electrical symbols, so that Owner may develop graphics.

F. The graphic development package shall use a mouse or similar pointing device in conjunction with a drawing program to allow the user to perform the following:

   1. Define symbols
   2. Position and size symbols
   3. Define background screens
   4. Define connecting lines and curves
   5. Locate, orient and size descriptive text
   6. Define and display colors for all elements
   7. Establish correlation between symbols or text and associated system points or other displays

G. System shall allow graphical displays to be created to represent any logical grouping of system points or calculated data based upon building function, mechanical system, building layout or any other logical grouping of points which aids the operator in the analysis of the facility. To accomplish this, the user shall be able to build graphic displays that include point data from multiple DCU Controllers including Terminal Equipment Controllers used or DDC equipment.

H. System Configuration and Definition
   1. All temperature and equipment control strategies and energy management routines shall be definable by the operator. System definition and modification procedures shall not interfere with normal system operation and control.
   2. The system shall be provided complete with all equipment and documentation necessary to allow an operator to independently perform the following functions:
      a. Add/delete/modify stand-alone DDC Controller panels
      b. Add/delete/modify operator workstations
      c. Add/delete/modify application specific controllers
      d. Add/delete/modify points of any type and all associated point parameters and tuning constants
      e. Add/delete/modify alarm reporting definition for points
      f. Add/delete/modify control loops
      g. Add/delete/modify energy management applications
      h. Add/delete/modify time and calendar-based programming
      i. Add/delete/modify totalization for points
      j. Add/delete/modify historical data trending for points
      k. Add/delete/modify custom control processes
      l. Add/delete/modify any and all graphic displays, symbols and cross-reference to point data
      m. Add/delete/modify dial-up telecommunication definition
      n. Add/delete/modify all operator passwords. Add/delete/modify alarm messages

   3. Definition of operator device characteristics, DCU Controllers individual points, applications and control sequences shall be performed using instructive prompting software. a. Libraries of standard application modules such as temperature, humidity and static pressure control may be used as "building blocks" in defining or creating new control sequences. In addition, the user shall have the capability to easily create and archive new modules and control sequences as desired via a word processing type format. Provide a library of standard forms to facilitate definition of point characteristics. Forms shall be self prompting and incorporate a fill-in-the-blank approach for definition of all parameters. The system shall immediately detect an improper entry and automatically display an error message explaining the nature of the mistake.
   4. Inputs and outputs for any process shall not be restricted to a single DCU Controller, but shall be able to include data from any and all other network panels to allow the development of network-wide control strategies. Processes shall also allow the operator to use the results of one process as the input to any number of other processes (cascading).
   5. Provide the capability to backup and store all system databases on the workstation hard disk. In addition, all database changes shall be performed while the workstation is on-line without disrupting other system operations. Changes shall be automatically recorded and downloaded to the appropriate DCU Controller. Similarly, changes made at the DCU Controllers shall be automatically uploaded to the workstation, ensuring system continuity. The user shall also have the option to selectively download changes as desired.
   6. Provide context-sensitive help menus to provide instructions appropriate with operations and applications currently being performed.

I. Alarm Handling Software:
   1. Include alarm handling software to report all alarm conditions monitored and transmitted through DDC controllers, gateways, and other network devices.
   2. Alarm handling shall be active at all times to ensure that alarms are processed even if an operator is not currently signed on to DDC system.
   3. Alarms display shall include the following:
      a. Indication of alarm condition such as "Abnormal Off," "Hi Alarm," and "Low Alarm."
      b. **"Analog Value" or "Status" group and point identification with native language point descriptor such as "Space Temperature, Building 110, 2nd Floor, Room 212."**
      c. Discrete per point alarm action message, such as "Call Maintenance Dept. Ext-5561."
      d. Include extended message capability to allow assignment and printing of extended action messages. Capability shall be operator programmable and assignable on a per point basis.

   4. Alarms shall be directed to appropriate operator workstations, printers, and individual operators by privilege level and segregation assignments.
   5. Send e-mail, page, text and voice messages to designated operators for critical alarms.
   6. Alarms shall be categorized and processed by class.
      a. Class 1:

         1) Associated with fire, security and other extremely critical equipment monitoring functions; have alarm, trouble, return to normal, and acknowledge conditions printed and displayed.
         2) Unacknowledged alarms to be placed in unacknowledged alarm buffer.
         3) All conditions shall cause an audible sound and shall require individual acknowledgment to silence audible sound.

      b. Class 2:

         1) Critical, but not life-safety related, and processed same as Class 1 alarms, except do not require individual acknowledgment.
         2) Acknowledgement may be through a multiple alarm acknowledgment.

      c. Class 3:

         1) General alarms; printed, displayed and placed in unacknowledged alarm buffer queues.
         2) Each new alarm received shall cause an audible sound. Audible sound shall be silenced by "acknowledging" alarm or by pressing a "silence" key.
         3) Acknowledgement of queued alarms shall be either on an individual basis or through a multiple alarm acknowledgement.
         4) Alarms returning to normal condition shall be printed and not cause an audible sound or require acknowledgment.

      d. Class 4:

         1) Routine maintenance or other types of warning alarms.
         2) Alarms to be printed only, with no display, no audible sound and no acknowledgment required.

7. Include an unacknowledged alarm indicator on display to alert operator that there are unacknowledged alarms in system. Operator shall be able to acknowledge alarms on an individual basis or through a multiple alarm acknowledge key, depending on alarm class.
8. To ensure that no alarm records are lost, it shall be possible to assign a backup printer to accept alarms in case of failure of primary printer.

J. Trends:
1. Trend all I/O point present values, set points, and other parameters indicated for trending.
2. Trends shall be associated into groups, and a trend report shall be set up for each group.
3. Trends shall be stored within DDC controller and uploaded to hard drives automatically on reaching 75% of DDC controller buffer limit, or by operator request, or by archiving time schedule.
4. Trend intervals shall be operator selectable from 10 seconds up to 60 minutes. Set trend intervals for each I/O point after review with Owner and CxA.
5. When drive storage memory is full, most recent data shall overwrite oldest data.
6. Archived and real-time trend data shall be available for viewing numerically and graphically by operators.

2.15 GRAPHICS PAGES LAYOUT AND QUALITY

A. All proposed graphics pages are to be submitted to engineer for approval prior to uploading to system.
1. After uploading graphics pages to system, cooperate with Engineer and Owner to fine tune graphics pages with respect to layout, formatting, points displayed, etc.

B. Schematic representation of all equipment and system graphics must be accurate and representative of the actual installed field conditions, such as respective locations of indicated devices, air flow patterns, etc. Changes in the field installation, variances in equipment installed versus equipment specified, etc., will require controls subcontractor to revise graphics.

C. Control and monitored points for any system may be presented ***solely*** in tabular form, without graphic representation, only with prior approval of Engineer. Otherwise, a graphical page showing system schematic must be provided for each system.

D. Where Modbus or Bacnet interface with equipment controllers is provided, all readable / writeable points available must be accessible via BAS. Of these total number of points, a limited, select number of critical points must be displayed on a dedicated graphics page, accessible by clicking on the schematic of the equipment/system with which associated.
1. Provide Engineer with latest updated list of Bacnet or Modbus points, names and addresses from equipment manufacturer.
a. Where selected Bacnet points to display are not designated in drawings or these specifications, budget for displaying up to 30 such points to be selected by Engineer and/or Owner from the latest updated list of Bacnet or Modbus points for equipment being monitored.

2. Equipment manufacturer's point names are often unclear or ambiguous as to what they actually reference. Contractor will modify any point text descriptor per Engineer and/or Owner direction so than the meaning is absolutely clear.

E. Building floor plans
1. Building floor plans are to indicate clearly separate HVAC zones. Distinction between HVAC zones may be illustrated by a variety of means acceptable to Engineer, including darker lines surrounding the zone, color variations, superimposed duct layouts, etc. A

clear indication of the extent of floor plan served by each unit must be given. Depending upon temperature-dependent color-coding

2. Engineer endeavors to provide current floor layouts in contract drawings. However, Owner may modify buildings by adding doors or walls, etc. If necessary due to changes in building floor plans, revise graphics to show accurate wall and door locations.
3. All building floor plans must indicate final room numbers (exceptions to include only very small rooms which have no thermostat, such as janitor's closets, etc.). Prior to producing floor plan graphics, confirm in writing from Owner and/or Engineer what final room numbers are. Graphics display for special purpose rooms, such as Gyms, Cafeterias, Band Halls, etc., must show this generic name of room in addition to room number (if it is indicated on drawings).
4. Locations of all major equipment (VAV boxes, air handlers, exhaust fans, chillers, boilers, pumps, etc.) are to be indicated on floor plans, along with a clear indication of the area each serves.
5. Floor plan graphic of each zone is to be color-coded, displaying different colors to show space conditions are within or out of specified temperature range.
6. All temperature, relative humidity, and CO2 sensors locations are to be indicated on floor plans in actual position where installed. A clear indication of which unit(s) is controlled by that sensor must be given (such as by a dashed or curved line connecting the two).
7. Actual readings of temperature, relative humidity, and CO2 sensors are to be indicated on floor plans. Readings must be strategically placed on graphic screen so that there is no ambiguity whatsoever as to which room(s) the values apply (without having to hover over or click on the values). Where this proves not to be possible given graphical constraints, provide an acceptable method of clarification, such as a line connecting the room sensor symbols to the values.

F. Graphics text
1. All text displayed on graphic must be large enough to be clearly and easily readable. Font colors must be chosen for good contrast against background so that they are clearly and easily readable. Super-position of separate text lines overlapping one another overlapping other iconography, or truncated text is not acceptable.
2. Text wording for labeled points must be clear and easily understood to any person with moderate experience with HVAC systems.
3. Not all text must have identical font and style on each individual graphic page. Use of varying size and style is required and helpful in identifying and distinguishing important values. However, use consistent font size and style for displaying parameters of similar nature or importance.
4. Text for all parameters must be so positioned on graphics screens that it is unquestionably obvious to what symbols, equipment, or values it applies. This is typically done by placing the text very close to the item to which it applies. Where graphics prevent this (e.g. where it would be too crowded and therefore unclear), use arrows or lines connecting value to the item.
5. Equipment indicated in graphics must be identified with the precise name as indicated in drawings in order to facilitate cross-referencing between graphics and drawings. Where equipment name has changed or Owner desires it be changed, make such modification on final graphics pages.
6. Symbols for devices such as smoke detectors, cut-out safety switches, filter dP sensors, heating or cooling coils, etc., must be labeled so that it is unambiguously clear what the symbol represents.
7. Spelling on graphics pages must be correct.

G. Specified Points

1. *At a minimum*, every input and output listed as a point in bid documents must be displayed graphically.

H. Units

1. Units for all parameters are to be listed on graphics screens or other screens. Use the following nomenclature, or other only as approved by Engineer.
   a. Commanded state: On/Off or Off/Enable, as appropriate
   b. Variable speed motor (e.g. fan or pump) commanded speed: % of full speed

      1) It is unacceptable to display BAS output signal to VFD when such signal does not correspond to the actual VFD/fan speed. Coordinate closely with VFD programming such that speed indication on BAS screen exactly matches actual VFD speed. When VFD is off, speed displayed on graphic must show 0%.

   c. Variable speed motor (e.g. fan or pump) speed feedback: % of full speed feedback
   d. Duct static pressure and duct static pressure setpoint: in. WC, or "wc, following by 'setpoint' when value displayed is the setpoint
   e. Temperature: °F, or deg F, or simply 'F'

      1) Outside air temperature: OAT
      2) Discharge or supply air temperature: use either DAT or SAT
      3) Return air temperature: RAT

   f. Relative humidity: % RH
   g. Valve or damper analog output commanded position: % open

      1) For cooling tower bypass valves, add descriptive text such as "% open to bypass")

   h. Valve or damper analog output feed back position: % open / position feedback
   i. CO2 reading and CO2 setpoint: ppm
   j. Hydronic system pressure: psi
   k. Hydronic system differential pressure: psi dP, or psi ΔP
   l. Chiller cooling load: Tons
   m. Refrigerant system pressure: psi
   n. Alarm state of any point: Alarm / Normal
   o. Air flow: CFM
   p. Water flow: GPM
   q. Light level: fc (footcandles)
   r. Filter status: Dirty / Clean for digital, in. WC, or "wc for analog
   s. Power and energy: kWh, kW, KVA.
   t. Power factor: PF

2. For any additional parameters not specifically listed above, use similarly descriptive, standardly accepted units designations, approved by Engineer.
3. Consistent nomenclature for points must be used throughout all graphics pages.
4. Graphics text MUST distinguish between On/Off and Off/Enable digital output points. Typical Off/Enable items include chillers, boilers, DX units, etc. Typical On/Off items include fan motors, pumps, etc. Do not indicate a status or command value of "ON" for equipment that is actually controlled as Off/Enable.

5. **Numerical values for all units are to be displayed to decimal point values truncated to a level commensurate with the accuracy of the sensor.** Unless otherwise noted, display values to the following decimal accuracy:
   a. List to 0 decimal points accuracy: Variable speed drive speed, relative humidity, % valve and damper position, CO2 concentration, water flow, air flow, gallons, kWh, KVA, kW, amps.
   b. List to 1 decimal point accuracy: Temperature sensor inputs, temperature setpoints, duct static pressure, and voltage.
   c. List to 2 decimal point accuracy: Building static pressure, Power Factor.

I. Reset schedules
   1. ALL reset schedules specified in operating sequences must be clearly indicated on the screen of the equipment to which it applies. (For example, a chilled water supply temperature reset schedule versus outside air temperature must be listed on the chiller graphic page.) All values in this reset schedule are to be operator adjustable by clicking on the value within the reset schedule.

J. Forced parameters
   1. Provide a clear indication on graphic screen when automatic control or readout of *any* point (command or status, input or output, analog or digital) has been overridden (usually referred to as being placed in Operator or Forced or Manual mode). This may be done in a variety of ways acceptable to engineer (such as placing a large, bold M next to the point, having the point value flash red, placing a dashed rectangle around it, etc.)
   2. The indication of a point being in Forced mode must be placed on the main graphic screen of the equipment such that Operator is not required to access other backup screens to see which points are Forced.

K. Provide navigation icons or "linkages" for major systems pages or major equipment items to allow the operator to switch quickly from one major system or building area screen to another.

L. Indication of equipment Status
   1. Graphics must make clear with no ambiguity the meaning of the term "Status" (often as applied to equipment such as boilers and chillers, the meaning is not intuitively clear).
      a. When Status indicates presence or absence of an alarm, it must be labeled "Alarm Status".
      b. When Status indicates an actual on/off or operating state of equipment, specifically indicate what status is being provided. For example, if the Status point reads whether the burner is firing or not, it must be labeled "Burner Status"; if the Status point reads whether a chiller compressor is On or not, it must be labeled "Compressor Status"; if the Status point simply indicates whether a piece of equipment has received an Enable command or not, it must be labeled "Status: Equipment Enabled".

2.16 DDC CONTROLLERS

A. DDC system shall consist of a combination of network controllers, programmable application controllers and application-specific controllers to satisfy performance requirements indicated.

B. DDC controllers shall perform monitoring, control, energy optimization and other requirements indicated.

C. DDC controllers shall use a multitasking, multiuser, real-time digital control microprocessor with a distributed network database and intelligence.

D. Each DDC controller shall be capable of full and complete operation as a completely independent unit and as a part of a DDC system wide distributed network. The digital system controllers shall perform full control automation functions regardless of the condition of communications with the Central Operator's Station.

E. Environment Requirements:
1. Controller hardware shall be suitable for the anticipated ambient conditions.
2. Controllers located in conditioned space shall be rated for operation at 32 to 120 deg F.
3. Controllers located outdoors shall be rated for operation at 32 to 150 deg F.

F. Power and Noise Immunity:
1. Controller shall operate at 90 to 110 percent of nominal voltage rating and shall perform an orderly shutdown below 80 percent of nominal voltage.
2. Operation shall be protected against electrical noise of 5 to 120 Hz and from keyed radios with up to 5 W of power located within 36 inches (900 mm) of enclosure.

G. DDC Controller Spare Processing Capacity:
1. Include spare processing memory for each controller. RAM, PROM, or EEPROM will implement requirements indicated with the following spare memory:
   a. Network Controllers: 50 percent.
   b. Programmable Application Controllers: Not less than 50 percent.
   c. Application-Specific Controllers: Not less than 50 percent.

2. Memory shall support DDC controller's operating system and database and shall include the following:
   a. Monitoring and control.
   b. Energy management, operation and optimization applications.
   c. Alarm management.
   d. Historical trend data of all connected I/O points.
   e. Maintenance applications.
   f. Operator interfaces.
   g. Monitoring of manual overrides.

H. DDC Controller Spare I/O Point Capacity: Include spare I/O point capacity for each controller as follows:
1. Network Controllers:
   a. 20 percent of each AI, AO, BI, and BO points connected to controller.
   b. Minimum Spare I/O Points per Controller:
      1) AIs: Two.
      2) AOs: Two.
      3) BIs: Two.
      4) BOs: Two.

2. Programmable Application Controllers:
   a. Minimum Spare I/O Points per Controller:
      1) AIs: Two.
      2) AOs: Two.
      3) BIs: Two.
      4) BOs: Two.

3. Application-Specific Controllers:
   a. Minimum Spare I/O Points per Controller:
      1) AIs: Two.
      2) AOs: Two.
      3) BIs: Two.
      4) BOs: Two.

2.17 NETWORK CONTROLLERS

A. General Network Controller Requirements:
1. Include adequate number of controllers to achieve performance indicated.
2. System shall consist of one or more independent, standalone, microprocessor-based network controllers to manage global strategies indicated.
3. Controller shall have enough memory to support its operating system, database, and programming requirements.
4. Data shall be shared between networked controllers and other network devices.
5. Operating system of controller shall manage input and output communication signals to allow distributed controllers to share real and virtual object information and allow for central monitoring and alarms.
6. Controllers shall have a real-time clock.
7. Controller shall continually check status of its processor and memory circuits. If an abnormal operation is detected, controller shall assume a predetermined failure mode and generate an alarm notification.
8. Controllers shall be fully programmable.

B. Serviceability:
1. Controller shall be equipped with diagnostic LEDs or other form of local visual indication of power, communication, and processor.
2. Wiring and cable connections shall be made to field-removable, modular terminal strips or to a termination card connected by a ribbon cable.
3. Controller shall maintain BIOS and programming information in event of a power loss for at least 72 hours.

2.18 PROGRAMMABLE APPLICATION CONTROLLERS

A. General Programmable Application Controller Requirements:
1. Include adequate number of controllers to achieve performance indicated.
2. Software applications shall reside and operate in controllers. Editing of applications shall occur at operator workstations. Controllers shall be configured to use stored default values to ensure fail-safe operation.
3. Controller shall have enough memory to support its operating system, database, and programming requirements.
4. Data shall be shared between networked controllers and other network devices.
5. Operating system of controller shall manage input and output communication signals to allow distributed controllers to share real and virtual object information and allow for central monitoring and alarms.
6. Controllers that perform scheduling shall have a real-time clock.
7. Controller shall continually check status of its processor and memory circuits. If an abnormal operation is detected, controller shall assume a predetermined failure mode and generate an alarm notification.
8. Controllers shall be fully programmable.
9. Controller shall be equipped with diagnostic LEDs or other form of local visual indication of power, communication, and processor.

10. Controller shall maintain BIOS and programming information in event of a power loss for at least 72 hours.

2.19 APPLICATION-SPECIFIC CONTROLLERS

A. Description: Microprocessor-based controllers, which through hardware or firmware design are dedicated to control a specific piece of equipment. Controllers are not fully user-programmable but are configurable and customizable for operation of equipment they are designed to control.
   1. Capable of standalone operation and shall continue to include control functions without being connected to network.
   2. Data shall be shared between networked controllers and other network devices.

B. Communication: Application-specific controllers shall communicate with other application-specific controller and devices on network, and to programmable application and network controllers.

2.20 SENSORS & FIELD DEVICES

A. All sensors and field devices shall be of commercial grade quality and shall be installed according to the manufacturer's recommendations. Outdoor damper actuators shall be rated for exterior service and provided in weatherproof UV-inhibited housing.

B. Temperature Sensors (General)
   1. All temperature inputs for the automation system shall be derived directly from analog inputs from electronic temperature sensors. Transducing of pneumatic sensor signals shall not be acceptable.
   2. Temperature sensing elements shall be RTD type, thermistor type, or solid state sensors, as specified in drawings or points list. All sensors of a particular type shall be from the same manufacturer.
   3. Characteristics for temperature sensors:
      a. Interchangeability of +/- 0.2% at the reference temperature.
      b. Time constant response to temperature change shall be less than three seconds per degree F.
      c. Sensors shall be linear, drift free, and require only a one time calibration. Sensing elements shall be factory calibrated.
      d. The sensing elements shall be hermetically sealed.
      e. Additional linearizing, ranging, and lead length compensation may be accomplished in software if required to meet the accuracies specified within.
   4. Expected temperature sensor operating range and end to end accuracy, including errors associated with sensor, transmitter (if applicable), leadwire and A/D conversion shall be as follows:

Sensed Element	Expected Oper. Range	Sensor Accuracy
a. Return air	40 to 100˚F	0.5˚F
b. Indoor space temperature	40 to 100˚F	0.5˚F
c. Outside air	0 to 125˚F	0.5˚F

C. Adjustable Limited Range Wall Temperature Sensors (Thermostats)
   1. General: All wall sensors installed as part of this project shall have adjustable limited range setpoint adjustment function.
      a. 10K-2-R-SOD (10K, DA, Cool / Warm, OVR). Override option shall be provided.
      b. Setpoint limits shall be adjustable via the COS and password protected.

c. Unit shall have a built in processor and shall communicate with local controller.
d. Unit shall have an LCD display for space temperature and on / off state
e. Unit shall have a password protection function to restrict access to service mode.
f. Provide extra thermostats: 5 of each type.

2. Following areas shall have sensors with override option in addition to adjustable setpoint range function: all sensors in Administration, Gym, Hallways.

D. Humidity Sensors: Bulk polymer sensor element.
1. Bulk polymer sensor element. Install humidity sensors in the space and not in ductwork unless specifically noted. Coordinate locations of duct mounted sensors with Engineer.
a. Accuracy: 5 percent full range with linear output.
b. Room Sensors: With locking cover matching room thermostats, span of 25 to 90 percent relative humidity.
c. Duct and Outside-Air Sensors: With element guard and mounting plate.

E. Carbon Dioxide (CO2) sensors:

1. CO2 sensor shall monitor indoor carbon dioxide (CO2) levels in accordance with ASHRAE standard 62-2004. Complete kit shall include optional aspiration box for mounting sensor inside return air duct.
2. Sensor shall have a 4 - 20 mA linear output over a range of 0 - 5000 ppm of CO2. A SPDT shall be provided for local control or alarm output.
3. **Provide sensor with LCD readout.**
4. Power: 24VAC or DC at 400mA max.
5. Measuring range: 0-2000 ppm
6. Accuracy: 40 ppm + 2% of reading
7. Analog output: 4-20 mA
8. Control relay: N.O. SPST, 0.75 amp at 24VAC/VDC
9. Operating temperature: 32° - 122°F
10. Operating humidity: 5-95% non-condensing
11. Calibration adjustment: zero to span
12. Min. req. calibration: One year
13. Unit enclosure: UL fire rated
14. Aspiration box: High impact styrene

F. Equipment operation sensors as follows:
1. Status Inputs for Electric Motors: Current-sensing relay with current transformers, adjustable and set to 175 percent of rated motor current.
2. Electronic Valve/Damper Position Indication: Visual scale indicating percent of travel and 2- to 10-V dc, feedback signal.

G. Equipment on/off control shall use either momentary pulsed relays or magnetically latched relays, as appropriate for the equipment's control starter. Interfacing controls shall be configured such that in its last commanded state. All equipment safeties and interlocks shall remain active, and will not be bypassed by new EMS controls. For motors with VFDs provide On/Off Control as appropriate VFD terminals.

H. Motor On/Off Status: Unless otherwise specified, status shall be proven using current sensing relays connected at VFDs and calibrated for minimal operating speed.

I. Pressure Sensors: Pressure sensors and differential pressure sensors shall be piezo-resistive strain-gauge with temperature compensation. Sensors shall be selected to provide linear indication with an adequate span for the application. Sensor shall be 0 - 10 V or 4 - 20 mA.

Insure sensors are rated to operate at temperature of sensed media. Sensors shall have an accuracy of 1% of full scale. Sensors shall accept overpressures of at least 120 psig, at any port, without damaging the sensor.

J. Watthour Transducers: Shall have an accuracy of +/- 2.5% at 0.5 power factor to 2.0% at 1 power factor for KW and KWH outputs. Output signals for KW and KWH shall be internally selectable without requiring the changing of current or potential transformers. Current and potential transformers shall be in accordance with ANSI C57.13.

K. Voltage Outputs: Variable voltage outputs shall provide a voltage signal from 0 to 20 volts. All voltage outputs shall be fuse protected against shorts to 120 volts AC and capable of withstanding a short ground indefinitely. All voltage outputs shall be protected against + or - 1500 volts, 50 microseconds transients. Voltage outputs shall have a resolution of 0.1 volts.

L. Current Outputs: Variable current outputs shall be a sinking type and shall provide 0 to 20 milliamps with a resolution of 0.1 mA and a compliance of 20 volts minimum. All current outputs shall be fuse protected to 120 volts AC and protected against + or - 1500 volts, 50 microsecond transients.

M. Pressure Sensors: Pressure sensors and differential pressure sensors shall be piezo-resistive strain-gauge with temperature compensation. Sensors shall be selected to provide linear indication with an adequate span for the application. Sensor shall be 0 - 10 V or 4 - 20 mA. Insure sensors are rated to operate at temperature of sensed media. Sensors shall have an accuracy of 1% of full scale. Sensors shall accept overpressures of at least 120 psig, at any port, without damaging the sensor.

N. Motor On/Off Status: Unless otherwise specified, status shall be proven using current sensing relays connected at VFDs and calibrated for minimal operating speed.

O. Hardware Overrides: A three position manual override switch shall allow selection of the ON, OFF, or AUTO outputs state for each output point. In addition, all analog output points shall be equipped with an override potentiometer to allow manual adjustment of the analog output signal over its full range, when the 3 position manual override switch is placed in the ON position.

P. Damper Actuators
   1. Electronic direct-coupled actuation shall be provided.
   2. The actuator shall be direct-coupled over the shaft, enabling it to be mounted directly to the damper shaft without the need for connecting linkage. The fastening clamp assemble shall be of a 'V' bolt design with associated 'V' shaped toothed cradle attaching to the shaft for maximum strength and eliminating slippage. Spring return actuators shall have a 'V' clamp assembly of sufficient size to be directly mounted to an integral jackshaft of up to 1.05 inches when the damper is constructed in this manner. Single bolt or screw type fasteners are not acceptable.
   3. The actuator shall have electronic overload or digital rotation sensing circuitry to prevent damage to the actuator throughout the entire rotation of the actuator. Mechanical end switches or magnetic clutch to deactivate the actuator at the end of rotation are not acceptable.
   4. For power failure/safety applications, an internal mechanical spring return mechanism shall be built into the actuator housing. Non-mechanical forms of fail-safe operation are not acceptable.
   5. All spring return actuators shall be capable of both clockwise or counterclockwise spring return operation by simply changing the mounting orientation.

6. Proportional actuators shall accept a 0 to 10VDC or 0 to 20mA control input and provide a 2 to 10VDC or 4 to 20mA operating range. An actuator capable of accepting a pulse width modulating control signal and providing full proportional operation of the damper is acceptable. All actuators shall provide a 2 to 10VDC position feedback signal.
7. All 24VAC/DC actuators shall operate on Class 2 wiring and shall not require more than 10VA for AC or more than 8 watts for DC applications. Actuators operating on 120VAC power shall not require more than 10VA. Actuators operating on 230VAC shall not require more than 11VA.
8. All non-spring return actuators shall have an external manual gear release to allow manual positioning of the damper when the actuator is not powered. Spring return actuators with more than 60 in-lb torque shall have a manual crank for this purpose.
9. All modulating actuators shall have an external, built-in switch to allow reversing direction of rotation.
10. Actuators shall be provided with a conduit fitting and a minimum 3ft electrical cable and shall be pre wired to eliminate the necessity of opening the actuator housing to make electrical connections.
11. Actuators shall be Underwriters Laboratories Standard 873 listed and Canadian Standards Association Class 4813 02 certified as meeting correct safety requirements and recognized industry standards.
12. Actuators shall be designed for a minimum of 60,000 full stroke cycles at the actuator's rated torque and shall have a 2-year manufacturer's warranty, starting from the date of installation. Manufacturer shall be ISO9001 certified.

Q. Control Valves
1. Control Valves: Factory fabricated, of type, body material, and pressure class based on maximum pressure and temperature rating of piping system, unless otherwise indicated.
2. Globe or Characterized Ball Valves NPS 2 and Smaller: Bronze body, bronze trim, rising stem, renewable composition disc, and screwed ends with backseating capacity repackable under pressure.
3. Globe or Characterized Ball Valves NPS 2-1/2 and Larger: Iron body, bronze trim, rising stem, plug-type disc, flanged ends, and renewable seat and disc.
4. Hydronic system globe valves shall have the following characteristics:
    a. Rating: Class 125 for service at 125 psig and 250 deg F operating conditions.
    b. Internal Construction: Replaceable plugs and seats of stainless steel or brass.
    c. Select one or both valve seating arrangements below.
    d. Single-Seated Valves: Cage trim provides seating and guiding surfaces for plug on top and bottom of guided plugs.
    e. Maximum pressure drops of up to 5 psig (35 kPa) are usually acceptable.
    f. Sizing: See Schedule.
    g. Flow Characteristics: three-way valves shall have linear characteristics. Operators shall close valves against pump shutoff head.
    h. Butterfly Valves: 175-psi CWP, ASTM A 126 cast-iron body and bonnet, extended neck, stainless-steel stem, field-replaceable Buna N sleeve and stem seals, lug style, rated for end-of-service applications
    i. Select one of the following subparagraphs.
    j. Disc Type: ductile iron.

R. Valve Actuators
1. Electric Motors: Size to operate with sufficient reserve power to provide smooth modulating action or two-position action.
2. Small Valve Actuators: Equivalent to Johnson VA-715, except for exterior valves which must be weatherproof.

3. Electronic **Large-Valve** Actuators: Direct-coupled type designed for minimum 60,000 full-stroke cycles at rated torque.
   a. Valves: Size for torque required for valve close-off at maximum pump differential pressure.
   b. Overload Protection: Electronic overload or digital rotation-sensing circuitry.
   c. Position indicator: Provide a visual position indicator for field inspection.
   d. Temperature Rating: Minus 22 to plus 122 deg F.
   e. Run Time: 3**0 seconds**.
4. Electronic two–position **Large-Valve** Actuators: Direct-coupled type designed for minimum 60,000 full-stroke cycles at rated torque.
   a. Valves: Size for torque required for valve close-off at maximum pump differential pressure.
   b. Manual Operator: Provide with a handwheel operator connected to the valve shaft through a gear drive. The gear drive shall be independent of the motor drive.
   c. Local Control Switch: provide with switch on actuator for "local/remote" control.
   d. Overload Protection: Electronic overload or digital rotation-sensing circuitry.
   e. Position indicator: Provide 100% open and 100% closed limit switches for position indication to DDC system and a visual position indicator for field inspection.
   f. Temperature Rating: Minus 22 to plus 122 deg F.
   g. Run Time: 30 seconds
   h. Enclosure: weather-proof, non-ferrous.

S. Field Testing and Programming Equipment: A portable laptop or notebook computer shall interface via standard push-in connection at an asynchronous serial port located at the Control modules and at selected enhanced zone temperature sensors as indicated on project plans. This portable unit shall be capable of full global communications with all Control modules connected within the respective network and shall provide functionally identical user interface to the Workstation, in non-graphic format. Units shall be able to interrogate all points and alter all programming.

T. Provide water meter for building chilled water flow, Onicon F-1000 Series Insertion Flow Meter. Coordinate installation with Mechanical Contractor.

2.21 ENCLOSURES

A. General Enclosure Requirements:
   1. House each controller and associated control accessories in an enclosure. Enclosure shall serve as central tie-in point for control devices such as switches, transmitters, transducers, power supplies and transformers. Do not house more than one controller in a single enclosure.
   2. Include enclosure door with key locking mechanism. Key locks alike for all enclosures and include one pair of keys per enclosure.
   3. Enclosures shall be NRTL listed according to UL 508A.
   4. Enclosures constructed of steel, finished inside and out with polyester powder coating electrostatically applied and then baked to bond to substrate.
   5. Hinged door full size of front face of enclosure and supported using:
      a. Enclosures sizes less than 36 in. (900 mm) tall: Multiple butt hinges.
      b. Enclosures sizes 36 in. (900 mm) tall and larger: Continuous piano hinges.

B. Internal Arrangement:
   1. Internal layout of enclosure shall group and protect components associated with a controller, but not an integral part of controller.
   2. Arrange layout to group similar products together.

3. Include a barrier between line-voltage and low-voltage electrical and electronic products.
4. Factory or shop install products, tubing, cabling and wiring complying with requirements and standards indicated.
5. Terminate field cable and wire using heavy-duty terminal blocks.
6. Include spade lugs for stranded cable and wire.
7. Install a maximum of two wires on each side of a terminal.
8. Include enclosure field power supply with a toggle-type switch located at entrance inside enclosure to disconnect power.
9. Include enclosure with a line-voltage nominal 20-A GFCI duplex receptacle for service and testing tools. Wire receptacle on hot side of enclosure disconnect switch and include with a 5-A circuit breaker.
10. Mount products within enclosure on removable internal panel(s).
11. Include products mounted in enclosures with engraved, laminated phenolic nameplates (black letters on a white background). The nameplates shall have at least 1/4-inch- (6-mm-) high lettering.
12. Route tubing cable and wire located inside enclosure within a raceway with a continuous removable cover.

C. Environmental Requirements:
1. Evaluate temperature and humidity requirements of each product to be installed within each enclosure.
2. Calculate enclosure internal operating temperature considering heat dissipation of all products installed within enclosure and ambient effects (solar, conduction and wind) on enclosure.
3. Where required by application, include temperature-controlled electrical heat to maintain inside of enclosure above minimum operating temperature of product with most stringent requirement.
4. Where required by application, include temperature-controlled ventilation fans with filtered louver(s) to maintain inside of enclosure below maximum operating temperature of product with most stringent requirement.
5. Include temperature-controlled cooling within the enclosure for applications where ventilation fans cannot maintain inside temperature of enclosure below maximum operating temperature of product with most stringent requirement.
6. Where required by application, include humidity-controlled electric dehumidifier or cooling to maintain inside of enclosure below maximum relative humidity of product with most stringent requirement and to prevent surface condensation within enclosure.

2.22 RELAYS

A. All:
1. Heavy duty, rated for at least 10 A at 250-V ac and 60 Hz.
2. Construct the contacts of either silver cadmium oxide or gold.
3. Relay enclosed in a dust-tight cover.
4. Coil transient suppression to limit transients to non-damaging levels.
5. Plug each relay into an industry-standard, 35-mm DIN rail socket. Plug all relays located in control panels into sockets that are mounted on a DIN rail.
6. Mechanical Life: At least 10 million cycles.
7. Electrical Life: At least 100,000 cycles at rated load.
8. Timing Ranges: Multiple ranges from 0.1 seconds to 100 minutes.
9. Timing Ranges, where applicable: Multiple ranges from 0.1 seconds to 100 minutes.
10. Repeatability: Within 2 percent.
11. Recycle Time: 45 ms.
12. Minimum Pulse Width Control: 50 ms.

13. Power Consumption: 5 VA or less at 120-V ac.
14. Ambient Operating Temperatures: Minus 40 to 115 deg F (Minus 40 to 46 deg C).
15. General-Purpose Relays: With LED indication and a manual reset and push-to-test button.
16. Multifunction Time-Delay Relays: With knob and dial scale for setting delay time.

B. Current Sensing Relay:
1. Monitors ac current.
2. Independent adjustable controls for pickup and dropout current. Choose relay size to be able to read smallest current from motor at lowest speed.
3. Energized when supply voltage is present and current is above pickup setting.
4. De-energizes when monitored current is below dropout current.
5. Dropout current adjustable from 50 to 95 percent of pickup current.
6. Include a current transformer, if required for application.
7. House current sensing relay and current transformer in its own enclosure. Use NEMA 250, Type 12 enclosure for indoors and NEMA 250, Type 4 for outdoors.

2.23 UNINTERRUPTABLE POWER SUPPLY (UPS) UNITS

A. 250 through 1000 VA:
1. UPS units shall provide continuous, regulated output power without using their batteries during brown-out, surge, and spike conditions.
2. Load served shall not exceed 75 percent of UPS rated capacity, including power factor of connected loads.
3. UPS shall provide up to 15 minutes of battery power.
4. Performance:
   a. Input Voltage: Single phase, 120- or 230-V ac, compatible with field power source.
   b. Load Power Factor Range (Crest Factor): 0.65 to 1.0.
   c. Output Voltage: 101- to 132-V ac, while input voltage varies between 89 and 152-V ac.
   d. On Battery Output Voltage: Sine wave.
   e. Inverter overload capacity shall be minimum 150 percent for 30 seconds.
   f. Recharge time shall be a maximum of six hours to 90 percent capacity after full discharge to cutoff.
   g. Transfer Time: 6 ms.
   h. Surge Voltage Withstand Capacity: IEEE C62.41, Categories A and B; 6 kV/200 and 500 A; 100-kHz ringwave.

5. UPS shall be automatic during fault or overload conditions.
6. Include front panel with power switch and visual indication of power, battery, fault and temperature.

2.24 SURGE PROTECTION

A. Zener diodes, silicone avalanche diode, optical isolation, varistors, or combination thereof.

B. Transient protection
1. Communications LAN:
   a. Provide surge protection equipment sized specifically for expected operating current of LAN.
   b. Exceeds severity level 4 of IEC 801-4.

c. Operating voltage: 12 volts.
d. Maximum operating current: 200 mA
e. Clamping action turn-on: 14.3 volts
f. Maximum clamping at 2 kW (8 x 20 microsecond wave): 22 volts
g. Maximum surge voltage: 20 kV
h. Maximum surge current (8 x 20 microsecond wave): 2.5 kA
i. Current leakage at perating voltage: 5 microamps
j. As manufactured by Surge Control Limited, SPR series, or approved equal.

2. Power supply:
a. Provide surge protection equipment sized specifically for expected operating current of DDC controller.
b. Exceed recommendations for ANSI / IEEE C62.41-1991 Categories A3 and B3 and UL1449.
c. Design such that suppressor does not "wear out" with repeated surges.
d. CSA certified and UL recognized.
e. EMI / RFI filtering.
f. Differential and common mode suppression and filtering.
g. Less than 5 nanosecond response time.
h. Maximum transient voltage 6 kV.
i. Maximum transient current 3 kA.
j. Minimum clamping turn-on, 210 volts.
k. Maximum clamping voltage, (l-test):
1) line to neutral — 245 volts.
2) line to ground — 245 volts.
3) neutral to ground — 245 volts.
l. Maximum clamping voltage @ 3 kA:
1) line to neutral — 325 volts.
2) line to ground — 430 volts.
3) neutral to ground — 430 volts.
m. As manufactured by Surge Control Limited, SPP-1200 series, or approved equal.

C. Protective devices shall be continuous duty, automatic and self restoring.

2.25 CONTROL WIRE AND CABLE

A. 7/24 soft annealed copper strand with a 2- to 2.5-inch (50- to 65-mm) lay.

B. Plenum rated LAN and Communication Cable complying with NFPA 70 and DDC system manufacturer requirements for network being installed.

2.26 CONTROL POWER WIRING AND RACEWAYS

A. Comply with requirements in Section 260533 "Raceways and Boxes for Electrical Systems" for electrical power raceways and boxes.

B. Comply with requirements in Section 260519 "Low-Voltage Electrical Power Conductors and Cables" electrical power conductors and cables.

2.27 IDENTIFICATION

A. Provide engraved phenolic tag, fastened with drive pins with min. 0.5" high white lettering on black background, bearing unique identification nomenclature for control equipment and devices.

PART 3 - EXECUTION

3.1 PRE-INSTALLATION MEETINGS

A. Pre-installation Conference: Schedule and attend conference at location of owner's choosing. Mandatory attendees include representatives from BAS contractor, Owner, Engineer, and Commissioning Authority.

3.2 EXAMINATION

A. Examine substrates and conditions for compliance with requirements for installation tolerances and other conditions affecting performance of the Work. Verify compatibility with and suitability of substrates. Examine roughing-in for products to verify actual locations of connections before installation. Examine walls, floors, roofs, and ceilings for suitable conditions where product will be installed.

B. Prepare written report listing conditions detrimental to performance of the Work.

C. Proceed with installation only after unsatisfactory conditions have been corrected.

D. Review proposed control sequences for reasonableness and ability to be programmed. For any sequences which contractor believes are incorrect, unworkable, or incapable of being programmed, clarify with Engineer via RFI prior to uploading control program.

3.3 DDC SYSTEM INTERFACE WITH OTHER SYSTEMS AND EQUIPMENT

A. Coordinate with Owner for provision of required communication infrastructure that is Owner's responsibility, including data drops, IP addresses, etc.

B. Communication Interface to Equipment with Integral Controls: DDC system shall have communication interface with equipment having integral controls and having a communication interface for remote monitoring or control. Reference drawings for equipment to be connected.

3.4 GENERAL INSTALLATION REQUIREMENTS

A. The I/O Summary on the drawings is provided as a list of the minimum points required. Provide all controls points, temperature sensors, relays, actuators, and devices necessary to achieve operational sequences at no additional cost to the Owner, whether explicitly called for or not in this specification. Coordinate with all sub-contractors to ensure all items are provided and installed.
   1. Controlled and/or monitored points required for proper operation of units may differ by unit manufacturer. If HVAC or other equipment ultimately installed differs from that specified, provide controlled and monitored points required for proper operation as determined by equipment supplier and Engineer.

B. Install in accordance with manufacturer's instructions.

C. Controls Contractor is responsible for complete operational installation of system, including, but not limited to the following:
   1. Electrical power supply to all control system components, including but not limited to; controllers, actuators, sensors, from dedicated circuits in electrical panels.
   2. Complete installation of duct-mounted components, including but not limited to: temperature, relative humidity, pressure, and CO2 sensors, and dampers/actuators.
   3. Complete installation of pipe-mounted components, including but not limited to: control valves and actuators, temperature sensors, pressure sensors.

D. All electrical material and installation shall be in accordance with local applicable codes and requirements of Division 26. All automation system equipment supplied shall be provided with adequate grounding in accordance with the manufacturer's specifications and suggested engineering applications procedures. These requirements shall include, but not be limited to:
   1. A "clean earth ground" for all FCUs and central operator's station.
   2. No "ground mixing" between equipment components.
   3. Insulation of all panels from metal conduits.
   4. Equal-potential grounding for equipment where required.

E. Identification:
   1. Provide a permanent, stick-on tape marker on the inside cover of the space sensor (e.g. temperature, RH) to identify the name of the HVAC unit associated with the sensor.
   2. Provide within each enclosure with a complete set of as-built schematics, tubing, and wiring diagrams and product literature for that particular controller.
   3. Label each end of cable, wire and tubing in enclosures following an approved identification system that extends from field I/O connection and all intermediate connections throughout length to controller connection. **Use printed labels, not hand-written.**
   4. Identify all controller enclosures with 1/8 inch thick plastic labels not less than 3 x 1.25 inches. Fasten with stainless-steel rivets or self-tapping screws or contact-type permanent adhesive, compatible with label and with substrate

F. Install products to satisfy more stringent of all requirements indicated.

G. Install products level, plumb, parallel, and perpendicular with building construction. Support products, tubing, piping wiring and raceways. Brace products to prevent lateral movement and sway or a break in attachment.

H. If codes and referenced standards are more stringent than requirements indicated, comply with requirements in codes and referenced standards.

I. Fabricate openings and install sleeves in ceilings, floors, roof, and walls required by installation of products. Before proceeding with drilling, punching, and cutting, check for concealed work to avoid damage. Patch, flash, grout, seal, and refinish openings to match adjacent condition.

J. Seal penetrations made in fire-rated assemblies and in acoustically rated assemblies in accordance with applicable fire codes.

K. Fastening Hardware:
   1. Stillson wrenches, pliers, and other tools that damage surfaces of rods, nuts, and other parts are prohibited for work of assembling and tightening fasteners.
   2. Tighten bolts and nuts firmly and uniformly. Do not overstress threads by excessive force or by oversized wrenches.
   3. Lubricate threads of bolts, nuts and screws with graphite and oil before assembly.

L. Install products in locations that are accessible and that will permit service and maintenance from floor, equipment platforms, or catwalks without removal of permanently installed furniture and equipment.

M. Corrosive Environments:
1. Avoid or limit use of materials in corrosive airstreams and environments, including, but not limited to, the following:
   a. Laboratory exhaust-air streams.
   b. Process exhaust-air streams.
2. When conduit is in contact with a corrosive airstream and environment, use Type 316 stainless-steel conduit and fittings or conduit and fittings that are coated with a corrosive-resistant coating that is suitable for environment. Comply with requirements for installation of raceways and boxes specified in Section 260533 "Raceways and Boxes for Electrical Systems."
3. Where instruments are located in a corrosive airstream and are not corrosive resistant from manufacturer, field install products in NEMA 250, Type 4X enclosure constructed of Type 316L stainless steel.

3.5 CONTROLLER INSTALLATION

A. Quantity and location of network and programmable application controllers shall be determined by DDC system manufacturer to satisfy requirements indicated.

B. Install controllers in enclosures to comply with indicated requirements in a protected location that is easily accessible by operators.

C. Test and adjust controllers to verify operation of connected I/O to achieve performance indicated requirements while executing sequences of operation.

3.6 FIELD QUALITY CONTROL

A. Manufacturer's Field Service: Engage a factory-authorized service representative to test and inspect components, assemblies, and installations, including connections.
1. Perform each visual and mechanical inspection and electrical test stated in NETA Acceptance Testing Specification. Certify compliance with test parameters.
2. Test and adjust controls and safeties. Replace damaged and malfunctioning controls and equipment.

3.7 DDC SYSTEM I/O CHECKOUT, ADJUSTMENT, CALIBRATION AND TESTING

A. Prepare and submit a report to Engineer and Commissioning Authority documenting results for checking, adjustment, calibration, testing. Include a description of corrective measures and adjustments made to achieve desire results for each I/O point, control sequence, and system.

B. Sensor Check and Calibration:
1. Sensor Check and Calibration: Coordinate with Testing, adjusting, and balancing (TAB) firm to calibrate all sensors and provide report of findings.
   a. All sensors not accurate within range specified and submitted are to be replaced.
   b. Add an offset to those sensors which are inaccurate, but are within specified and submitted range, so that they read accurately.

c. CO2 sensors' calibration is typically verified by TAB contractor at a single point in time, and does not prove accuracy at higher or lower ends of the sensors' expected operating range. Contractor must verify sensor accuracy at high and low ends of expected range by the following means:
   1) Low end: Take CO2 sensor readings near the end of a 3-day period when school has been mostly or entire unoccupied, and prior to its being re-occupied. CO2 should read in the 410 – 440 ppm range. Unless contractor knows of logical reason sensors should read outside this range, make sensor adjustment / replacement as per a. and b. above.
   2) High end: Observe CO2 sensor readings over a minimum of 5 days when school is heavily occupied. CO2 should read no higher than 1200 – 1400 ppm. For sensors which read higher than 1400ppm for any period of time > 20 minutes:
      a) Verify proper operation of HVAC equipment responsible for providing outside air ventilation. **Coordinate this verification in conjunction with mechanical (other other) subcontractor, as the issue may be due to improper mechanical operation.**
      b) Re-verify sensor accuracy at a time when it is reading at a high (1300ppm or greater) value.
      c) Make sensor adjustment / replacement as per a. and b. above.

C. Control Damper Checkout:

1. Verify that control dampers are installed correctly for flow direction.
2. Verify that proper blade alignment, either parallel or opposed, has been provided.
3. Verify that damper frame attachment is properly secured and sealed.
4. Verify that actuator wiring is complete, enclosed and connected to correct power source.
5. Stroke and adjust control dampers following manufacturer's recommendation, from 100 percent open to 100 percent closed and back to 100 percent open. Verify that damper blade travel is unobstructed and that damper actuator and linkage attachment is secure.
6. Check and document open and close cycle times for applications with a cycle time less than 30 seconds.
7. For control dampers equipped with positive position indication, check feedback signal at multiple positions to confirm proper position indication.

D. Control Valve Checkout:
1. Verify that control valves are installed correctly for flow direction.
2. Verify that valve body attachment is properly secured and sealed.
3. Verify that valve actuator and linkage attachment is secure.
4. Verify that actuator wiring is complete, enclosed and connected to correct power source.
5. After piping systems have been tested and put into service, but before insulating and balancing, inspect each valve for leaks. Adjust or replace packing to stop leaks. Replace the valve if leaks persist.
6. Stroke and adjust control valves following manufacturer's recommended procedure, from 100 percent open to 100 percent closed and back to 100 percent open. Verify that valve ball, disc or plug travel is unobstructed.
7. For control valves equipped with positive position indication, check feedback signal at multiple positions to confirm proper position indication.

E. Meters: Verify proper and expected readings at zero, 50, and 100 percent of Project design values.

F. Switches: Calibrate switches to make or break contact at set points indicated.

G. Controllers:
1. Verify voltage, phase and hertz.
2. Verify that protection from power surges is installed and functioning.
3. Verify that ground fault protection is installed.
4. If applicable, verify if connected to UPS unit.
5. If applicable, verify if connected to a backup power source.
6. If applicable, verify that power conditioning units, transient voltage suppression and high-frequency noise filter units are installed.
7. Verify that wire and cabling is properly secured to terminals and labeled with unique identification.
8. Verify that spare I/O capacity is provided.
9. Test every I/O point connected to DDC controller to verify that safety and operating control set points are as indicated and as required to operate controlled system safely and at optimum performance. Test every I/O point throughout its full operating range.
10. Test every control loop to verify operation is stable and accurate.
11. Adjust control loop proportional, integral and derivative settings to achieve optimum performance while complying with performance requirements indicated. Document testing of each control loop's precision and stability via trend logs.
12. Test and adjust every control loop for proper operation according to sequence of operation.
13. Test software and hardware interlocks for proper operation. Correct deficiencies.
14. Operate each analog point at upper, mid, and lower portions of range
15. Exercise each binary point.
16. For every I/O point in DDC system, read and record each value at operator workstation, at DDC controller and at field instrument simultaneously. Value displayed at operator workstation, at DDC controller and at field instrument shall match.

3.8 DDC SYSTEM COMMISSIONING TESTS

A. Provide written request to Commissioning Authority (CxA) for initiation of on-site Functional Testing. Functional Testing will not take place until:
1. System has been thoroughly tested as described in this section under "DDC System I/O Checkout, Adjustment, Calibration, And Testing", and report has been submitted.
2. Certificate of Readiness has been submitted to CxA.
   a. Submit Certificate of Readiness only when confirmed that system is operating perfectly, and in accordance with specifications and drawings requirements. Only minor exceptions to this requirement are allowable, and must be clearly described in the submitted Certificate of Readiness
   b. At his discretion, if entire control system has not been completed, CxA may test portions of system which have been completed.

3. Prefunctional Checklists, if required by contract documents, have been submitted to CxA.

B. Contractor shall set up trend logs as requested by the CxA, Engineer, or Owner, without any limits on the number of trends, to assist in testing and verification of system operation.
1. Prior to start of functional testing, set up trend logs as follows (* *as applicable* to systems, equipment, and BAS points provided on this project):

   a. Set all trend logs to record and maintain minimum 72 hours worth of readings.
   b. All CHW air handlers: Trend the following points, as applicable to unit:
      1) Readings every change of value:
         a) Fan status
      2) Readings every 2 minutes:

a) Return air CHW coil leaving air temperature
b) Outside air CHW coil leaving air temperature
c) Mixed air temperature
d) Heater status
e) Unit discharge air temperature (might be same as heater leaving air temperature)
f) Heater leaving air temperature (might be same as unit discharge air temperature)

3) Readings every 15 minutes:
a) Static pressure
b) Static pressure setpoint
c) Fan speed
d) Space temperature
e) Return air temperature
f) Return air relative humidity
g) Return air and/or space CO2
h) Outside air damper position
i) Outside air temperature

c. All DX package and split systems: Trend following points, as applicable to unit:
1) Readings every change of value:
a) Fan status
b) Compressor status, each stage or each compressor
c) Reheat / dehumidification status
d) Heater status (stepped heaters), each stage
e) Heater status (SCR), each 15% COV

2) Readings every 2 minutes:
a) Unit discharge air temperature
b) DX cooling coil leaving air temperature
c) Outside air CHW coil leaving air temperature

3) Readings every 15 minutes:
a) Static pressure
b) Static pressure setpoint
c) Fan speed
d) Space temperature
e) Return air temperature
f) Return air relative humidity
g) Return air and/or space CO2
h) Outside air damper position
i) Outside air temperature

d. Variable air volume boxes: Trend the following points, as applicable to unit:
1) Readings every change of value:
a) Fan status (fan-powered box)
b) Heater status (stepped heaters), each stage
c) Heater status (SCR), each 15% COV

2) Readings every 5 minutes:
a) Unit discharge air temperature

3) Readings every 15 minutes:
a) Space temperature
b) Space relative humidity
c) Space CO2
d) Damper position
e) CFM
f) CFM setpoint

e. Exhaust & ventilation fans: Trend the following points, as applicable to unit:
   1) Readings every change of value:
      a) Fan status
      b) Fan Command (on/off or Off/Enable)

f. Electric Power Meters: Trend the following points, as applicable:
   1) Readings every 15 minutes:
      a) kW
      b) Power Factor
      c) Amps, all legs

g. DX dedicated Outside Air pretreatment units: Trend the following points, as applicable to unit:
   1) Readings every change of value:
      a) Fan status
      b) Compressor status, each stage or each compressor
      c) Reheat / dehumidification status
      d) Heater status (stepped heaters), each stage
      e) Heater status (SCR), each 15% COV
      f) Heat wheel status
   2) Readings every 2 minutes:
      a) Heat wheel OA intake leaving air temperature
      b) DX cooling outside air coil leaving air temperature
      c) DX hot gas reheat coil leaving air temperature
      d) Unit discharge air temperature
      e) Unit discharge air humidity (or dewpoint)
   3) Readings every 15 minutes:
      a) Static pressure
      b) Static pressure setpoint
      c) Fan speed
      d) Outside air temperature

h. CHW dedicated Outside Air pretreatment units: Trend the following points, as applicable to unit:
   1) Readings every change of value:
      a) Fan status
      b) Reheat / dehumidification status
      c) Heater status (stepped heaters), each stage
      d) Heater status (SCR), each 15% COV
      e) Heat wheel status
   2) Readings every 2 minutes:
      a) Heat wheel OA intake leaving air temperature
      b) Cooling outside air coil leaving air temperature
      c) Cooling coil % open
      d) Unit discharge air temperature
      e) Unit discharge air humidity (or dewpoint)
   3) Readings every 15 minutes:
      a) Static pressure
      b) Static pressure setpoint
      c) Fan speed
      d) Outside air temperature

i. Chiller plant: Trend the following points, as applicable to system:
   1) Readings every change of value:
      a) Chiller enable
      b) Pump status
      c) Alarm status & code

2) Readings every 2 minutes:
   a) NA
3) Readings every 15 minutes:
   a) Pump speed for variable speed pumps
   b) Chiller supply and return water temperature
   c) Chilled water differential pressure
   d) Chilled water flow

C. CxA will perform on-site and remote Functional Testing as specified in Construction Documents and in accordance with generally accepted commissioning procedures. DDC system shall demonstrate correct operation and accuracy of monitored and controlled points as well as operation capabilities of sequences, logs, trends, reports, specialized control algorithms, diagnostics, and other software indicated. Reference section 019113 "General Commissioning Requirements" for more information.
   1. Contractor is to provide a qualified representative, intimately familiar with the project installation and issues, to carry out Functional Testing procedures as directed by CxA, for the duration of Functional Testing.

D. CxA will issue reports to Contractor, in such forms as Commissioning Issues Logs, emails, written reports, detailing items which appear not to be in conformance with construction documents requirements. Take prompt action to remedy deficiencies indicated in field report and submit a second written request when all deficiencies have been corrected. Repeat process until no deficiencies are reported.

E. Due to the complexity of control systems and potential for latent defects to go undiscovered during Functional Testing, DDC system or tested portions thereof must operate essentially trouble-free for a period of 30 consecutive days following Functional Testing before Final Acceptance of system will be granted.

3.9 WARRANTY SERVICE

A. System deficiencies discovered subsequent to Final Acceptance of system will be treated as Warranty items. Under Warranty requirements, address all operating problems, repair or replace worn or defective components, adjust control parameters as required for proper operation. Parts and supplies shall be manufacturer's authorized replacement parts and supplies.

B. Provide system inspections and reports annually during warranty period: reference Part 1 paragraph "Warranty Inspections" in this specifications section.

3.10 SOFTWARE SERVICE AGREEMENT

A. Technical Support: Beginning **at Final Acceptance of system**, service agreement shall include software support for two year(s).

B. Upgrade Service: At Substantial Completion, update software to latest version. Install and program software upgrades that become available within two years from date of **Final Acceptance of system**. Upgrading software shall include operating system and new or revised licenses for using software.

3.11 DEMONSTRATION AND TRAINING

A. Engage a factory-authorized service representative with complete knowledge of Project-specific system installed to train Owner's maintenance personnel to adjust, operate, and maintain DDC

system. Owner may send up to 10 persons to attend training. Training shall occur within normal business hours at a mutually agreed on time.

B. Provide not less than 14 hours of training total, broken up into four 3.5 hour sessions. Provide staggered training schedule as requested by Owner to accommodate Owner personnel schedules.

C. Schedule training with Owner at least four business days before expected Substantial Completion. All training shall occur before Final Acceptance of control system.

D. Organize training sessions into logical groupings of technical content and to reflect different levels of operators having access to system. Plan training sessions to accommodate daily operators, advanced operators, and system managers and administrators.

E. Provide each attendee with a color hard copy of all training materials and visual presentations. Hard-copy materials shall be organized in a three-ring binder with table of contents and individual divider tabs marked for each logical grouping of subject matter.

F. Instructor Requirements:
1. One or multiple qualified instructors, as required, to provide training.
2. Instructors shall have not less than three years of providing instructional training on not less than five past projects with similar DDC system scope and complexity to DDC system installed.

G. On-Site Training:
1. Provide as much of training located on-site as deemed feasible and practical by Owner. Owner will provide conditioned classroom or workspace with ample desks or tables, chairs, power and data connectivity for instructor and each attendee.
2. Instructor shall provide training materials, projector and other audiovisual equipment used in training.
3. On-site training shall include regular walk-through tours to observe each unique product type installed with hands-on review of operation, calibration and service requirements.
4. Operator workstation shall be used in training, whether Owner's or contractor-provided & via remote web access.

H. Training Content:
1. Basic operation of system.
2. Understanding DDC system architecture and configuration.
3. Understanding each unique product type installed including performance and service requirements for each.
4. Understanding operation of each system and equipment controlled by DDC system including sequences of operation, each unique control algorithm and each unique optimization routine.
5. Operating operator workstations, printers and other peripherals.
6. Logging on and off system.
7. Accessing graphics, reports and alarms.
8. Adjusting and changing set points and time schedules.
9. Recognizing DDC system malfunctions.
10. Understanding content of operation and maintenance manuals, and control drawings.
11. Accessing data from DDC controllers.
12. Operating portable operator workstations.
13. Review of DDC testing results to establish basic understanding of DDC system operating performance and HVAC system limitations as of Substantial Completion.

14. Running each specified report and log, setting up Trend Logs.
15. Displaying and demonstrating each data entry to show Project-specific customizing capability. Demonstrating parameter changes.
16. Stepping through graphics penetration tree, displaying all graphics, demonstrating dynamic updating, and direct access to graphics.
17. Executing digital and analog commands in graphic mode.
18. Demonstrating control loop precision and stability via trend logs of I/O for not less than 10 percent of I/O installed.
19. Demonstrating DDC system performance through trend logs and command tracing.
20. Demonstrating scan, update, and alarm responsiveness.
21. Demonstrating spreadsheet and curve plot software, and its integration with database.
22. Demonstrating on-line user guide, and help function and mail facility.
23. Demonstrating multitasking by showing dynamic curve plot, and graphic construction operating simultaneously via split screen.
24. Demonstrating operation of HVAC equipment in normal-off, -on and failed conditions while observing individual equipment, dampers and valves for correct position under each condition.
25. Demonstrating integration into DDC system is able to communicate with DDC controllers or gateways, as applicable.

I. Maintain a training attendee list and sign-in sheet. Sign-in sheet shall include training session number, date and time, instructor name, phone number and e-mail address, and brief description of content to be covered during session. List attendees with columns for name, phone number, e-mail address and a column for attendee signature or initials.

1. For each session, submit a scanned copy (PDF) of circulated sign-in sheet to Owner, Engineer, and Commissioning Authority with 48 hours of end of training session. **THE SIGN-IN SHEET PROVIDED FOR CONTRACTOR ON THE LAST PAGE OF THIS SPECIFICATION MUST BE USED. FAILURE TO TURN IN ACCEPTABLE DOCUMENTATION OF TRAINING ON THE PROVIDED TRAINING SIGN-IN SHEET WILL BE TREATED AS IF NO TRAINING TOOK PLACE. CONTRACTOR WILL BE REQUIRED TO PROVIDE AND DOCUMENT ADDITIONAL TRAINING AS SPECIFIED ABOVE.**

TRAINING SIGN-IN SHEET

NAME OF FACILITY: _____

SYSTEM TRAINED: **230900 – INSTRUMENTATION AND CONTROLS**

TRAINER _____
person's name Organization

TRAINING DATE: _____

START / END TIME: Start: End:

TRAINING LOCATION: _____

IN ATTENDANCE (printed name)	SIGNATURE	ORGANIZATION

I CONFIRM TRAINING AS INDICATED ABOVE TOOK PLACE AND WAS SATISFACTORY.

OWNER'S REPRESENTATIVE SIGNATURE _____

END OF SECTION 230900

SECTION 230993 - SEQUENCE OF OPERATIONS FOR HVAC CONTROLS

PART 1 - GENERAL

1.1 RELATED DOCUMENTS

A. Drawings and general provisions of the Contract, including General and Supplementary Conditions and Division 01 Specification Sections, apply to this Section.

B. Related Sections include the following:
1. Division 23 Section "Instrumentation and Control for HVAC" for control equipment and devices and for submittal requirements.
2. Division 23 Sections for DX RTUs, Chillers, AHUs.

1.2 ABBREVIATIONS

A. Abbreviations used in this specifications section:

1. BAS: Building Automation System
2. CO2: Carbon Dioxide
3. DAT: Discharge Air Temperature
4. DCV: Demand Control Ventilation
5. DDC: Direct Digital Control
6. dP: differential Pressure
7. dT: differential Temperature
8. DX: Direct Expansion
9. EF: Exhaust fan
10. OA: Outside Air
11. RH: Relative Humidity
12. RTU: Rooftop Unit
13. TAB: Testing, Adjusting and Balancing

1.3 SUMMARY

A. This Section includes control sequences for HVAC systems, subsystems, and equipment. Provide controls and operating sequences for the following HVAC systems at **Animal Shelter, HVAC and Controls Upgrades**.
1. While design intent is for BAS to control all equipment, additional BACnet card interface to the equipment is necessary for monitoring of parameters and specialized alarms with alarm codes. Coordinate with equipment manufacturer. As needed, obtain clarification from engineer and supplier, prior to bidding.
2. See drawings and specifications for Scope of Work of Base and Alternate Bids
3. Central plant: air-cooled chillers, integral primary chilled water pumps, and secondary chilled water pumps.
4. Hydronic DOAS units.
   a. Base Bid: DOAS-1, 2, 3, 4
   b. Alternate Bid: DOAS-5
5. Hydronic RTUs:

a. Alternate Bid: RTU-1, 2

6. Environmental air exhaust fans.

B. **Prior to bidding**, Controls contractor shall notify general, mechanical and electrical contractor of any work required for operational installation of controls devices that will not be conducted by Controls Contractor. This includes, but is not limited to: installation of controls devices and sensors, as well as any needs for power wiring and/or conduit.

C. A list of the minimum number and type of control points required is given. Provide any additional points, sensors, gateways, interface cards, etc. as required to achieve sequences, whether specifically called for in Points List or not.

D. All equipment must be listed in strict alpha-numeric order when presented as a part of any tables, summaries, global searches, etc. (For example, to ensure this, unit numbers should begin with **0**, such as VAV-**0**6-02, so that they appear in the list prior to units with numbers -10, -11, -12, etc.)

E. Provide all hardware, software, and labor required to achieve specified sequences.

F. Units or systems that are grouped together for purposes of sequence description are not meant to be controlled together. Each system shall have its own set of adjustable parameters and will respond only to values (space temperatures for example) associated with it. This means that one unit may be in heating mode while another with similar sequence may be in cooling mode.

1.4 EQUIPMENT TIME SCHEDULES

A. Contractor is responsible for programming schedules for all equipment and systems prior to turning system over to Owner at final system acceptance.

B. **Request Owner's input for on/off and optimum start/stop (OSS) programming for all equipment and systems, including both Normal and upcoming Holiday schedules, and Program holiday time schedules as per Owner's direction.**

1. Obtain owner's desired schedule as soon as practically possible. Prior to then, HVAC systems are never to be programmed to operate in normal Occupied mode on weekends, nor for more than 12 hours on any day Mon-Fri, unless expressly directed to do so by general contractor or Owner, and only for special purposes such as wall dry-out, removing fumes generated during construction, etc. **Inform the commissioning agent of such special such scheduling directions, and of the target date the special schedule will be lifted**.

C. Note that outside air dampers, exhaust fans, or various other specified equipment devices may have independent dedicated time schedule different from the equipment which they serve or are associated with. For example, distinct time schedules may be required for actual Occupied time (for instance, 8AM to 5:30PM) requiring ventilation versus required equipment start/stop times for comfort.

D. Equipment items having the same Off/Enable or Start/Stop times are not to be software interlinked such that one cannot be changed without changing the other. Each individual equipment item is to have its own individual programmable Off/Enable or Start/Stop scheduling capability.

E. Stagger unit start times by a minimum of 20 seconds between starts.

F. Unoccupied hours, Off / Enable:
   1. Enable cooling if space air temperature rises above 90˚F (adj.). Disable unit once temperature has fallen to 85˚F (adj.) or below.
   2. Enable heating if space air temperature drops below 45˚F (adj.). Disable unit once temperature has risen to 55˚F (adj.).
   3. Enable cooling if relative humidity rises above 60% (adj.). Disable unit once relative humidity has fallen to 55% (adj.).
   4. Unit shall run for a minimum of 30 min. (adj.) or until specified conditions are satisfied.
   5. Issue Alarm if the unit has been in unoccupied mode for 4 hours (adj) and relative humidity rises above 60% (adj.). This time delay should allow false alarms immediately after units are disabled.
   6. Manual Override: Control may be manually overridden at the zone Thermostat, controller and the COS.
   7. Hardware Interlocks: Controls shall not bypass any safeties or interlocks associated with fire protection shutdown.

1.5 SPACE SETPOINTS

A. Temperature and humidity setpoints and operating schedules listed in sequences of operations are initial values, based upon input from Owner's representatives and common industry practice, and are not to be considered as final. Final setpoint and schedules must be programmed as per Owner's direction, and in consultation with and with approval of Owner and/or Engineer and Testing and Balancing firm, regardless of schedules listed in this specification.

B. In consultation with Owner and/or Engineer, and Testing and Balancing firm, make minor revisions to operating sequences which will result in improved operation of systems.

C. All adjustable setpoint temperature sensors / thermostats are to be set and software limited as to the range heating and cooling setpoint which building occupants may reset. Initial values are listed in control sequences. Determine final limits in consultation with Owner and Engineer.

D. Whether in Occupied or Unoccupied mode, the active heating setpoint must always be lower than the active cooling setpoint by a minimum of 5F, or higher if called for in sequences. This differential is referred to as the "deadband".
   1. With exception of that required for dehumidification, no heating operation is to take place when room temperature is within deadband. Operation of hot water coil or electric reheat is to begin only when room temperature has fallen 1˚F below the heating setpoint.
   2. Cooling operation within the deadband must be at an absolute minimum, ie. specified minimum air flow to provide necessary ventilation.

E. Room Temperature Setpoints
   1. Allowable range for space temperature setpoints will be limited via control system.
      a. Program temperature setpoints to be set only at the central operator station, and not be adjustable at the zone thermostat.

2. System is expected to maintain room temperature no more than 0.75F above cooling setpoint / below heating setpoint during 'normal' steady-state operating conditions.
3. Unless otherwise noted in drawings or operating sequences described below, program the following room temperature setpoints for all heating and cooling equipment.

    a. Occupied Hours
        1) Cooling setpoint = 74F
        2) Heating setpoint = 69F

    b. Unoccupied Hours
        1) Cooling setpoint = 86F
        2) Heating setpoint = 59F
        3) Run unit for a minimum 20 minutes. Disable unit once temperature has fallen 3F below Cooling or 3F above heating setpoint.

F. Room Relative Humidity (RH) Setpoints
1. System is expected to begin dehumidification sequence when space RH reaches RH setpoint.
2. Unless otherwise noted in drawings or operating sequences described below, program the following room RH setpoints for all cooling equipment.

    a. Occupied Hours
        1) Cooling RH setpoint = 59%
        2) Run unit for a minimum 5 minutes. Disable dehumidification mode once RH has fallen 3% below setpoint.

    b. Unoccupied Hours
        1) Cooling setpoint = 59%

G. Room CO2 Setpoints
1. Unless otherwise noted in drawings or operating sequences described below, program the following room CO2 setpoints for all HVAC equipment with CO2 control capability serving individual rooms where DCV is specified:

    a. Occupied Hours
        1) Minimum setpoint = 700ppm, corresponding to minimum OA intake.
        2) Maximum setpoint = 1100ppm, corresponding to maximum OA intake (equal to design OA CFM).
        3) Program system so that min and max setpoints may be adjusted by system operator via Global Command.

    b. Unoccupied Hours
        1) Not applicable.

1.6 BACNET CONNECTIONS

A. Bacnet interface will be used for monitoring of parameters, specialized alarms with alarm codes that are sensed by the unitary controller:
1. All points readable within equipment Bacnet register are to be communicated to and readable by BAS.

2. Provide a dedicated graphic page to display selected Bacnet points. Navigate to this dedicated graphic by clicking on the equipment icon.
3. The point descriptor text for all Bacnet points displayed on the dedicated Bacnet page are to have clear, unambiguous meaning; simply copying manufacturer's text descriptor may not be acceptable. Supply manufacturer's points text descriptors to Engineer for pre-approval. Revise descriptors if directed by Engineer.
4. Supply manufacturer's points text descriptors to Engineer for pre-approval. Revise descriptors if directed by Engineer.
    a. Not all Bacnet points potentially available from HVAC units are to be read by the BAS. Choose only those points which are applicable to the specific units installed and applicable to the specified operating sequences. If such points are not readily discernable, obtain clarification from unit supplier and Engineer. Provide Engineer list of such proposed points for approval prior to installation. Revise these points based on Engineer's direction based upon points' importance to unit operation.
5. Display all values with proper units (deg F, psig, etc.), truncated to decimal point accuracy commensurate with accuracy of sensor.

1.7 OUTDOOR AIR CONDITIONS

A. Outdoor air temperature and relative humidity are to be read from an Engineer-approved web-based weather service such as Accuweather.com. Update conditions at no longer than the minimum update time provided by national weather service.

B. Display OA temperature and RH conditions on all graphics screens. Display values rounded to nearest whole number.

1.8 GENERAL

A. Individual sequence descriptions may list units to which sequence applies. Contractor must verify equipment quantities and unit types through drawings review and on-site inspections.

B. All setpoints used in controls sequences shall be user adjustable with a minimum of keystrokes.

C. Points lists have been provided as a general guideline, and are not all inclusive. Provide all points required for achievement of operating sequences.

D. All delays shall be operator adjustable. Program for a minimum delay between on/off commands for HVAC equipment to prevent short cycling.

E. Unless noted otherwise, program for minimum VFD speed of 30% of full 60hz speed.

F. Unless noted otherwise, close HVAC unit outside air dampers during all Unoccupied periods.

G. Economizer Operation:
1. For units with return air: During Occupied periods when system is in cooling mode, place unit in Economizer mode when:
    a. OA enthalpy is less than 23 Btu/lbm and equal or less than return air enthalpy; or
    b. OA dew point temperature is less than 54F and equal or less than dewpoint of return air enthalpy.

2. For dedicated outside air units: During Occupied periods when system is in cooling mode, place unit in Economizer mode when:
   a. OA enthalpy is less than 23 Btu/lbm or OA air dew point temp is less than 54F.
3. Economizer operation is to be based upon global OA values, as described in "OUTDOOR AIR CONDITIONS" above, and not on OA values measured directly at the unit, unless specifically noted otherwise.

H. Optimum Start/Stop (OSS):
1. When this feature is Enabled, control system shall automatically calculate the optimal start time for each HVAC system or unit so that comfort conditions will be achieved by the scheduled Occupied time. Control system shall determine the optimal time for equipment shutdown so that comfort conditions may be maintained until scheduled off time with minimal energy use.
2. Program an OSS 'inhibit time' preventing start of unit more than 35 minutes prior to target comfort time.
3. Coordinate with Owner for information on desired times for comfort conditions and whether OSS is to be Enabled.

I. Interlocks:
1. Hardware: Controls shall not bypass any safeties or interlocks associated with fire protection shutdown.
2. Provide all hardware necessary to achieve software interlocks required for proper system operation, including but not limited to control of dampers and exhaust fans. Coordinate with mechanical and electrical contractors.

J. Damper Actuators:
1. Do not provide physical linkage between OA and return air dampers. Do not control OA and return dampers in complementary fashion (i.e., where sum of % open values of each always add to 100%) unless specifically directed in operating sequence.

K. Pumps: To prevent dead heading of pumps and chiller failures on low or no flow, program for minimum delays as follows:
1. When there is a call for cooling or when cooling is scheduled, start SCHWPs and modulate speed to maintain differential pressure setpoint.
2. After SCHWPs are operational, enable central plant (primary side).
3. Delay between positioning valves and enabling chillers, and pumping systems: When plant is enabled, command respective chiller isolation valves to the new position and after a delay of 2 minutes, enable pumps. After a delay of 2 minutes when flow is established as registered by flow switches, enable chillers.
4. Delay between disabling chillers and pumping systems and positioning valves: When changing operation modes, disable chillers and after a time delay of 2 minutes disable pumps, and command respective isolation valves to the new position.

L. AHUs:
1. Coordinate with TAB to obtain RA and OA damper positions at different fan speeds. This will allow the AHUs to bring in the scheduled OA airflow as needed, irrespective of the AHU fan speed.

M. VFD:
1. VFD speed displayed on graphic must match the actual speed at which the VFD is running, measured as a % of the full hertz to which Testing & Balancing (TAB)

firm has determined and programmed. For examples: If TAB programs 70hz max speed and VFD is running at X hz, graphic must display X ÷ 70 in percentage; if fan/VFD is Off, graphic must display 0% speed. It is not permissible to display an output signal to the VFD, if the signal does not match actual VFD speed.

N. AHU Fan-wall VFDs: Coordinate with equipment manufacturer for details.
1. Each fan has its dedicated VFD. During normal operation, all VFDs operate in tandem at the same speed.
2. Upon failure of a fan (motor or VFD), gravity backdraft damper closes. Operate the other fan at 100% (adj) speed. Issue alarm.

O. Operator Station Display: Indicate the following on operator workstation display terminal, as applicable per points list:
1. Building floor plan, indicating individual rooms, thermostat locations, and areas served by each air handler, fan coil unit and rooftop unit. Place sensor information strategically on the floor plan so that it is unambiguously clear which sensor values apply to which room.
2. Conditioned space air temperature, all zones.
3. Conditioned space air Base temperature setpoint, all zones.
4. Conditioned space air Actual temperature setpoint, all zones.
5. Distinguish different area(s) served by individual HVAC equipment items by use of color variation or heavy lines on floor plans graphics page.
6. When a control point is in "Test" mode, graphic shall indicate the status such as "test" or "manual".

1.9 SUMMARY TABLES

A. Provide a dedicated graphic page for a summary table for each type of HVAC equipment for which there are two or more types (e.g. rooftop units, fan-coil units, etc.).

B. Provide a master navigation button on main dashboard graphic page to take one to these tables.

C. Provide tables using format and headers as in the following Sample tables:

1	2	3	4	5	6	7	8	9	10
AHU w/ Reheat Summary table									
AHU	Space Temp	Space RH	Ret Air CO2	Fan Speed	CHW Valve Pos	CHW Coil DAT	Heat Status	Unit DAT	OAD % open
AHU-10	74	54%	750 (1)	50%	30%	54	Off (2)	54	44%

1	2	3	4	5	6	7	8	9	10
FCU Summary table									
FCU	Space Temp	Space RH	Ret Air CO2	Compr Status	Heat Status	Unit DAT	OA % open		

FCU-1	74	54%	750 (1)	On	Off (2)	54	44%		
1	2	3	4	5	6	7	8	9	10

DOAS Summary table

DOAS	OA Temp	OA RH	Fan Speed	Duct Static Pr	CHW Valve Pos	CHW Coil DAT	Heat Status	Unit DAT	OAD
DOAS-1	95	40%	50%	1"	30%	54	Off (2)	54	Open

Notes

(1) If no CO2 sensor exists, put "NA" in column.
(2) If SCR type, list %. If staged, list On or Off.
(3) If unit has no heat, put "NA" in column. If NO units in project have heat, omit column.
(4) List as On or Off, or as Enable or Disable, as appropriate.

1.10 ALARMS

A. General Alarm requirements:

1. Alarms described below are for multiple types of HVAC and other systems. Program as applicable for equipment which exists on this project.
2. Except as otherwise noted below, no alarms are to be generated for equipment or sensors during Unoccupied hours.
3. All alarm setpoints are to be easily adjustable by Operator via global commands.
4. A delay (suggested 20 minutes) is to be incorporated before alarms are generated immediately following HVAC equipment startup in order to give equipment time to obtain desired conditions. If the programmed delay time proves inadequate to prevent nuisance alarms at equipment startup, Controls contractor must verify what delay time is appropriate, and whether such alarms are caused by mechanical issues.
5. Alarms are to be set up scrupulously to avoid generation of nuisance alarms, e.g. alarms read from HVAC units which repeatedly fail to start, generating a new alarm each time
6. ALARM DESCRIPTIONS MUST BE CLEARLY GIVEN IN HISTORICAL ALARMS REGISTER TO INDICATE THE NAME OF THE ITEM CAUSING THE ALARM. This description must be plainly displayed without the requirement of having to 'hover' the cursor over the alarm line in the alarm history register.
7. Where control system connects via Bacnet to a controller of an HVAC unit, in addition to simple on/off status of alarm, alarm codes are to be read and displayed by the BAS. Provide a dedicated graphic page to list description of alarm codes.

B. Critical HVAC Alarms:

1. Control system will send alarm notifications via text message and email to designated Owner personnel for Critical HVAC alarms for the following:
2. When dedicated outside air coil leaving air temperature deviates from setpoint by 1.5F for 15 consecutive minutes.
3. Any additional Critical HVAC alarms designated by engineer or owner's facility manager (FM).

C. CO2 alarms:

1. Register alarm any time, during occupied or unoccupied hours, that a sensor reads outside of the following Minimum / Maximum expected values indicating sensor is likely malfunctioning: 370 ppm / 2000 ppm.
2. Register alarm when any CO2 sensor (for examples, space or return duct) reads above 1300ppm for 15 consecutive minutes.
    a. Program system to all alarm setpoint to be adjustable via a Global Command.

D. Space temperature alarms:
1. Register alarm any time, during occupied or unoccupied hours, that a sensor reads outside of the following Minimum / Maximum expected values indicating sensor is likely malfunctioning: 45F / 100F.
2. Register alarm when sensor remains 1.5F above cooling setpoint or 1.5F below heating setpoint for 15 consecutive minutes.

E. Relative Humidity (RH) alarms:
1. Register alarm any time, during occupied or unoccupied hours, that a sensor reads outside of the following Minimum / Maximum expected values indicating sensor is likely malfunctioning: 10% / 100%.
2. RH remains above setpoint for more than 20 consecutive minutes.

F. For all HVAC units (including exhaust or ventilation fans), register alarms under the following conditions (where applicable to particular unit):
1. Discrepancy between commanded state of operation and actual state of operation, as indicated by status feedback.
2. Discharge air temperature of any hydronic cooling coil remains 1.5F above or 2F below setpoint for more than 15 consecutive minutes.
3. Discharge air temperature of any DX cooling coil remains below 40F for more than 2 consecutive minutes.
4. Discharge air temperature from an electric heating coil fails to rise by 5F within 15 minutes after heater is enabled.
5. Outside air coil leaving air temperature remains below 35F for 5 consecutive minutes.
6. Mixed air temperature remains below 35F for 5 consecutive minutes.
7. Unit has tripped on any safety (e.g., high static pressure, freezestat).
8. Duct static remains above 2.5" for 15 consecutive seconds; shut down air handler.
9. Duct static pressure deviates above or below setpoint by 20% of setpoint for more than 15 minutes.

G. Register alarms for other equipment (e.g. refrigerant monitor, low or high static cutout switches, low temperature safety cutouts, etc.) when monitored alarm contacts close.

H. Smoke Control: Smoke detector, where existing on HVAC units, stops fan when products of combustion are detected in air stream.
1. Fan will be stopped directly via fire alarm system.
2. BAS is not required to monitor smoke detector status.
3. Stopping of fan by fire alarm system automatically signals alarm due to Command-Status mismatch at BAS.

1.11 CHILLER PLANT SEQUENCES

A. System starts and stops chiller plant when the following conditions are met:

1. Start plant based on Operating Schedules and Optimized Start-Stop Routines
2. Start plant based on call for cooling by AHU or FCU, provided there is an adequate load.
3. Disable plant when system detects outside temperature below 50 deg F (adj.).

B. Equipment rotation: Central plant comprises of two Secondary CHWPs, two chillers, each with dual Primary CHWPs. Prior to start up, pumps and chillers shall be designated as lead/lag equipment. Lead/lag equipment shall be rotated on a weekly basis with the intent of getting equal run time.

C. SCHWP Sequences: Applies to SCHWP-1 and 2
1. When there is a call for cooling, or based on operating schedules and optimized start stop routines, Chiller Plant is enabled.
2. Start both pumps at minimum pump speed (30% adj.). Signal alarm if pumps fail to start as commanded.
3. Monitor differential static pressures in supply and return chilled water lines at the location shown in the plans at the hydraulically distant end of the loop. Coordinate exact sensor location with Engineer.
4. Modulate secondary pump speeds simultaneously between 30% and 100% via variable frequency drives (VFDs) to maintain design differential pressure setpoint (adjustable).
    a. When pumps modulate to lowest speed, and the differential pressure is still above setpoint for a period of 5 minutes, disable lag pump. Modulate lead pump speed to maintain differential pressure setpoint.
    b. If lead pump speed rises over 90% (adjustable) for a period of 5 minutes (adjustable), then lag pump shall be enabled.
5. Freeze protection sequence: If OAT drops below 30F (adj.), close outside air dampers until OAT > 32F, open (to 50%) CHW valves in OA sections of dual path units, or DOAS unit, and enable pump. Disable pump when temperature rises above 35F (adj.)

D. Chiller Sequences:
1. Ensure that Secondary chilled water pump(s) are operational.
2. Open lead Chiller isolation valve and start lead primary chiller pump. Verify chilled-water flow via flow switches, and then start chiller.
3. Signal alarm if equipment fails to start as commanded. Immediately enable lag chiller system(s) in the event of an alarm input signal from lead chiller system.
4. Staging: In sequence, enable lag chiller and associated primary chilled water pump, in succession, under the following conditions when lead chiller(s) cannot meet load:
    a. If temperature sensor in bypass line shows the flow has reversed. For instance, if temperature in bypass rises above 50F adj.
    b. If chilled water supply temperature cannot be maintained (rises 1°F above setpoint), and chiller load is above 90% (adj.) and remains there for preset time delay. To prevent short cycling of chillers, ensure that a minimum run time of 15 minutes is programmed.
    c. First 30 minutes chiller plant is enabled for the day: Allow lead chiller sufficient time, 30 min (adj) to attain CHWST setpoint.
    d. After the first 30 minutes, the delay to start lag chiller shall be 10 minutes (adj).
    e. Issue alarm, if all chillers are on and supply chilled water temperature cannot be maintained (rises 1°F above setpoint and remains there for 10 minutes).
    f. In sequence, disable lag chiller and associated primary chilled water pump, when load drops and chillers are operating at 35% (adj) or lower for 10 minutes (adj). Close associated valves.

E. Reset Schedule: Reset supply chilled water temperature as follows:
   1. At no time shall chilled water supply temperature to the building be allowed to rise above the level indicated by the following linear relationship:

Outdoor Air Adj Temperature	Supply Chilled Water Adj Temperature
80˚F & above	44˚F
55˚F & below	48˚F

F. Adaptive Controls:
   1. BAS shall utilize adaptive control algorithms to directly control Chiller Sequencing by adding/removing chillers from service in such manner to assure that the total kW/ton of the Chilled Water plant is minimized. Adaptive algorithms must continuously re-revaluate and dynamically adjust chiller sequencing setpoints based on variations in chiller leaving water temperature setpoint and chilled water loop water differential temperature and flow to assure optimum energy efficiency.
   2. Secondary chilled water pump DP setpoint reset: Monitor and poll AHU CHW valve position to gauge chilled water demand. If none of the valves are fully (100%) open, gradually reset (lower) DP setpoint such that the most critical CHW valve opens to 100%. Ensure that AHUs are satisfied, and that reset sequence does not affect discharge air temperature at the cooling coil. When loads rise, reverse DP setpoint reset sequence.

G. Operator Station Display: Indicate the following on operator workstation display terminal:

   1. System graphic
      a. Provide text by each chiller indicating chiller ID (e.g. CH-1), mfr, and rated tons.
   2. Chiller Off/Enable
   3. Chiller alarms and alarm codes (codes may be displayed on BACnet interface page)
   4. Chiller isolation valve commanded position
   5. Chiller isolation valve position feedback
   6. Chiller chilled-water supply and return temperature (from chiller BACnet values), for each chiller; BAS-supplied insertion temperature sensors are not required for these points.
   7. Chilled-water temperature setpoint
   8. Chiller demand in % of full load
   9. Total Chiller Amps
   10. Primary Chilled-water pump on-off command and status
   11. Secondary chilled water pump on-off command and status
   12. Secondary chilled water pump speed, % of full speed
   13. Building chilled water supply and return temperatures
   14. Bypass leg chilled water temperature
   15. Building chilled water flow
   16. Building chilled water differential pressure
   17. Building chilled water differential pressure setpoint
   18. Building chilled water bypass valve command and feedback
   19. Outside air temperature
   20. Outside air relative humidity
   21. Dedicated BACnet interface page: Points are to be displayed if available from chiller BACnet; some points may not be available for all chiller manufacturers.
      a. Compressor starts, each compressor
      b. Compressor run hours, each compressor

c. Evaporator refrigerant pressure, each circuit
d. Condenser refrigerant pressure, each circuit
e. Evaporator entering water temperature
f. Evaporator leaving water temperature
g. Active CHS setpoint
h. Code numbers for active alarms
    1) Provide a dedicated page that displays meaning of all code numbers.
i. Operating kW, chiller
j. Run hours, chiller
k. Operating amps, each compressor
l. Run hours, each compressor
m. Starts, each compressor
n. Capacity, % of full
o. Evaporator flow switch status
p. Chiller Demand Limit
q. VFD Alarm Status and Speed Feedback via VFD BACnet.

1.12 DOAS AIR-HANDLING UNITS

A. Energy conservation design intent: Unit shall be programmed to achieve energy conservation goals listed below. Allocate adequate number of hours to fine tune these sequences to achieve stable and energy efficient operation.
    1. DOAS air volume modulation: Essentially DOAS and related EFs shall operate as a constant-volume system, but in two different modes, based on the programmed time schedules.
        a. Energy Conservation Mode: If indoor air quality is deemed acceptable by the Owner, DOAS and EFs may be programmed to operate at lower speed (66%, adj).
        b. Normal Operation Mode: DOAS and EFs operate at design CFMs. This mode may also be considered as Purge mode as systems operate at maximum design volumes.
        c. Coordinate operating schedules with Owner. They may decide to operate in Normal Mode during daytime occupied hours, and in Energy Conservation Mode during the nighttime hours. Another option is that the Owner may decide to operate in different modes for a certain period each hours. For instance, energy conservation mode for 45 minutes each hour and purge mode for 15 minutes (ad).
            1) If modes are programmed to change throughout the day, stagger modes for different DOAS units to prevent all systems going into high speed simultaneously.
    2. DOAS as Stage 1 cooling: Frequently colder discharge air from the DOAS is capable of meeting the building air conditioning loads. Do not program DOAS to always supply neutral air temperature. To the extent possible, DOAS shall operate to provide the first stage of cooling.
    3. DOAS electric heaters shall be used during winter hours, or to temper the discharge air in the event spaces served by DOAS are overcooling below heating setpoint. See DOAS DAT reset schedule below.

B. Time Schedules: DOAS units shall operate 24/7. However, Normal and Energy Conservation Modes will be programmed in coordination with the Owner.

C. System Operation:

1. Fan Operation: Within each mode, system shall operate as Constant Volume. Coordinate software interlocks and fan speeds between exhaust fans and DOAS.
2. Operate unit in cooling mode if outside air temperature is at or above 55F (adjustable).
   a. Modulate CHW valve to maintain discharge air temperature setpoint (54.0F adj) downstream of cooling coil.
   b. If space cooling T setpoint is satisfied but space RH rises above setpoint, reset DAT to 50.0F (adj) until space RH setpoint is achieved.
   c. Reheat: To prevent overcooling of the spaces, modulate heaters to maintain space Temperature heating setpoint.
3. Freeze prevention:
   a. When OAT drops below 35 (adj), open CHW valve to 30%, operate SCHWP to circulate water through coils to prevent coils from freezing. During such time, DOAS units and related EFs shall be in Energy Conservation Mode (lower fan speeds).

D. Alarms: Cooling coil discharge temperature exceeds 57F (adj) for 15 minutes, disable DOAS and issue alarm.

E. Operator Station Display: Indicate the following on operator workstation display terminal (if applicable) per each unit:
1. Global Outside-air-temperature indication.
2. Global Outside-air-RH indication.
3. System mode (Normal, Energy Conservation)
4. System on-off indication.
5. System Heating / Cooling / Dehumidification mode indication.
6. Supply Fan commanded state and status.
7. Supply Fan speed.
8. Discharge air temperature downstream of Chilled water coil: Setpoint and indication.
9. Cooling control-valve commanded position.
10. Discharge air temperature indication (downstream of electric heater).
11. Electric heater SCR capacity.
12. Motorized Outside Air Damper in the DOAS (interlocked with DOAS fan)
13. Exhaust fan speed and status

F. Safeties:
1. In cooling mode, cold coil temperature rises above 57F (adj) for 15 minutes (adj).
2. Freeze protection: See above.
3. Freeze-stat safety.
4. High temperature safety.
5. Fire alarm.

1.13 HYDRONIC ROOFTOP UNITS, SINGLE ZONE VAV

A. Time Schedule: Program On and Off times as Owner's instructions.

B. Fan Operation:
1. Unoccupied periods: Cycle fan to maintain unoccupied period setback temperature.
2. System starts fan to run continuously during occupied periods.
3. Modulate fan speed between minimum speed (adj.) and 100% to maintain space temperature and RH setpoints.

C. Space Sensors:
1. Provide space temperature and RH sensors as shown in the drawings.
2. Controlling space sensor: The Owner may select one of the following options:
   a. The Owner may designate one space T sensor as a controlling sensor.
   b. BAS system shall monitor most critical sensor and uses it as the controlling sensor.
   c. Return air temperature and RH sensors as controlling sensor.

D. Cooling Mode:
1. During start-up, enable unit in cooling mode if zone temperature is above cooling setpoint.
2. Modulate CHW valve to maintain discharge air temperature setpoint (54F, adj.)

E. Reset of CHW Coil Leaving Air Temperature Setpoint
1. Reset AHU DAT to maintain space T setpoint in the most energy efficient manner possible. Program a cascading sequence as follows:
   a. As space cooling load decreases, fan speed will modulate down. Once fan is at minimum speed, and space temperature is below cooling setpoint, gradually reset AHU DAT higher in 0.5F degree increments per 10-minute time period.
   b. Coil leaving temperature setpoint shall never be allowed to exceed 58F (adj).
   c. As cooling load increases reverse the above setpoint reset sequence.
2. Dehumidification mode: If RH rises above setpoint (60%, adj) for 20 minutes, fan should be at minimum speed.
   a. Modulate CHW valve to maintain AHU DAT of 50F.
   b. If space overcools below heating setpoint, modulate heater (stages or SCR) to maintain space heating setpoint.
   c. Disable mode when RH setpoint is achieved.

F. Heating Mode
1. If space temperature is lower than the heating setpoint, enable heater.
2. Heaters shall adjust to control discharge air temperature setpoint (95°F, adj.).
3. System shall modulate supply fan speed to maintain space temperature heating setpoint
4. If fan is at minimum speed and heating load continues to drop, system modulates SCR controller to maintain space temperature setpoint (instead of maintaining a fixed discharge air temperature). As heating loads increase, modulate heater to maintain 95F (adjustable) before increasing fan speed.
5. Disable heaters if space temperature rises above heating setpoint.
6. A high discharge air temperature cut-out switch shall disable electric heaters and issue alarm at COS.

G. Ventilation Sequence
1. Dampers shall not be hardwired to open and close when units are enabled/disabled.
2. Associated exhaust fans shall be disabled and outside air dampers shall remain closed during unoccupied hours -including cool-down and nighttime reset operation.
3. Provide dedicated time schedule for OA dampers and exhaust fans that *can be* set independently of AHU time schedule. Obtain actual Occupancy schedule from Owner and open / close outside air damper per Owner's actual Occupancy schedule (and **not per AHU schedule**).
4. Provide return air CO2 sensor, for monitoring purposes only. Demand controlled ventilation is not required.
5. Dynamically modulate OA and RA dampers such that unit brings in desired design OA intake at all fan speeds, i.e. OA damper will open more at minimum fan speed than at

100% fan speed. Coordinate with TAB to set damper positions at fan speeds of 100%, 75%, 50% and minim.

6. Ventilation:
   a. If CO2 concentration exceeds 1,400 ppm, system shall issue an alarm at the Central Operator's Station.

H. Operator Station Display: Indicate the following on operator workstation display terminal (if applicable) per each unit:
1. System occupied/unoccupied mode.
2. System mode: Cooling, heating, dehumidification, economizer.
3. A clear description of what area or room(s) unit serves.
4. Global outside air temperature and RH.
5. Fan commanded state.
6. Fan status.
7. VFD Speed command.
8. Coil leaving air temperature, setpoint and indication.
9. Cooling control-valve commanded position.
10. Heater commanded position.
11. Discharge air temperature after heating coil, setpoint and indication.
12. Space temperature setpoint and indication.
13. Space air relative humidity setpoint and indication.
14. Return air CO2 concentration minimum.
15. Return air temperature and relative humidity.
16. OA damper commanded position and feedback.
17. RA damper commanded position and feedback.
18. EF Status
19. Outside air enthalpy and economizer status.

I. Safeties:
1. Smoke Control: Smoke detector, located in return air, stops fan when products of combustion are detected in air stream. Stopping of fan automatically signals alarm.
2. Freeze protection: When OAT drops below 34F (adj), close OAD, open CHW valve to 30%.
3. Freeze-stat safety.
4. High temperature safety.

1.14 VENTILATION SEQUENCES

A. Design Intent:
1. The Building has a large number of exhaust air systems with high exhaust airflow CFM. Fans operate at different schedules. The design intent is to keep building pressurization positive by introducing adequate OA flow into the building via the DOASs that will exceed the exhaust air flow from the building.
2. BAS shall monitor run status of every exhaust fan. Based on number of fans in operation, BAS shall compute the total exhaust air CFM for the building. See drawings for list of exhaust fans and associated CFM. Coordinate CFMs with TAB contractor.
3. Minimum OA CFM setpoint = sum of exhaust volume + additional airflow required for positive building pressurization. Initial airflow setting for pressurization shall be 500 CFM (adj). The exact CFM shall be determined and fine-tuned by TAB contractor.
4. See DOAS sequence of operation and coordination of fan speeds with related EFs.

1.15 BUILDING EXHAUST FAN SCHEDULED CONTROL SEQUENCES

A. Applicable to all EFs. Refer to exhaust fan schedules in drawings for control notes.

B. Sequence:
1. Provide a dedicated time schedule for *each* exhaust fan that *can be* set independently of AHU time schedule.
2. Program off/enable according to Owner-directed time schedule. Program initial time schedule to be the same as that of the AHU(s) associated with EF.
3. For areas with DOAS units: See DOAS sequence of operation. When DOAS is at full speed, related EFs shall be at full speed. When DOAS is at low speeds, EFs shall operate at lower speeds.
4. For RTUs: Schedule may allow an EF to be commanded off when its associated AHU(s) are On. However, under no circumstances allow an exhaust fan to operate when it associated AHU is Off.

C. Manual Override: Control may be manually overridden at the controller and at the COS. Control will remain in "Override" position for a pre-programmed time period (1 hour, adj).

D. Interlocks:
1. Provide motorized damper for exhaust fans and interlock with fan with appropriate delays.
2. Hardware Interlocks: Controls shall not bypass any safeties or interlocks associated with fire protection shutdown.
3. Software Interlocks: Provide all hardware necessary to achieve software interlocks required for proper system operation. Coordinate with mechanical and electrical contractors.

E. Operator Workstation: Display the following data:
1. System graphic.
2. System occupied/unoccupied mode.
3. A clear description of what area, room(s), or equipment EF serves.
4. Fan On-Off command.
5. Fan On-Off status.
6. Fan Speed.
7. Summation of EA flow for the building, based on status of Exhaust Fans.

1.16 OTHER SEQUENCES

A. Operator Overrides: System shall allow operator to enable / disable unit and / or control / adjust all setpoints from COS.

B. Graphics pages must have units listed beside parameter values (e.g. °F, ppm, % Open, psi, etc.)

C. When parameters are in manual or test modes, graphics shall indicate that they are in test mode.

D. Provide up to 8 hours of programming to account for additional control sequences and fine-tuning above sequences, during the project.

SECTION 230993 - SEQUENCE OF OPERATIONS FOR HVAC CONTROLS

PART 2 - PRODUCTS (Not Applicable)

PART 3 - EXECUTION (Not Applicable)

END OF SECTION 230993

SECTION 232113 - HYDRONIC PIPING

PART 1 - GENERAL

1.1 RELATED DOCUMENTS

A. Drawings and general provisions of the Contract, including General and Supplementary Conditions and Division 01 Specification Sections, apply to this Section.

1.2 SUMMARY

A. Section includes pipe and fitting materials and joining methods for the following:
   1. Chilled-water piping.
   2. Makeup-water piping.
   3. Condensate-drain piping.
   4. Air-vent piping.

1.3 ACTION SUBMITTALS

A. Product Data: For each type of the following:
   1. Fittings.
   2. Piping.

B. Sustainability Submittals:

   1. Product Data: For solvent cements and adhesive primers, documentation including printed statement of VOC content.

C. Delegated-Design Submittal:

   1. Design calculations and detailed fabrication and assembly of pipe anchors and alignment guides, hangers and supports for multiple pipes, expansion joints and loops, and attachments of the same to the building structure.
   2. Locations of pipe anchors and alignment guides and expansion joints and loops.
   3. Locations of and details for penetrations, including sleeves and sleeve seals for exterior walls, floors, basement, and foundation walls.
   4. Locations of and details for penetration and firestopping for fire- and smoke-rated wall and floor and ceiling assemblies.

1.4 INFORMATIONAL SUBMITTALS

A. Coordination Drawings: Piping layout, drawn to scale, on which the following items are shown and coordinated with each other, using input from installers of the items involved:

   1. Suspended ceiling components.
   2. Other building services.
   3. Structural members.

B. Qualification Data: For Installer.

C. Welding certificates.

D. Field quality-control reports.

1.5 QUALITY ASSURANCE

A. Installer Qualifications:

B. Steel Support Welding: Qualify procedures and personnel according to AWS D1.1/D1.1M, "Structural Welding Code - Steel."

C. Pipe Welding: Qualify procedures and operators according to ASME Boiler and Pressure Vessel Code: Section IX.

1. Comply with ASME B31.9, "Building Services Piping," for materials, products, and installation.
2. Certify that each welder has passed AWS qualification tests for welding processes involved and that certification is current.

PART 2 - PRODUCTS

2.1 PERFORMANCE REQUIREMENTS

A. Hydronic piping components and installation shall be capable of withstanding the following minimum working pressure and temperature unless otherwise indicated:
1. Chilled-Water Piping: 175 psig at 200 deg F.
2. Makeup-Water Piping: 80 psig at 150 deg F.
3. Condensate-Drain Piping: 150 deg F.
4. Air-Vent Piping: 200 deg F.

2.2 COPPER TUBE AND FITTINGS

A. Drawn-Temper Copper Tubing: ASTM B 88, Type L.

B. Annealed-Temper Copper Tubing: ASTM B 88, Type K.

C. DWV Copper Tubing: ASTM B 306, Type DWV.

D. Wrought-Copper Unions: ASME B16.22.

2.3 STEEL PIPE AND FITTINGS

A. Steel Pipe: ASTM A 53/A 53M, black steel with plain ends; welded and seamless, Grade B, and wall thickness as indicated in "Piping Applications" Article.

B. Malleable-Iron Threaded Fittings: ASME B16.3, Classes 150 and 300 as indicated in "Piping Applications" Article.

C. Malleable-Iron Unions: ASME B16.39; Classes 150, 250, and 300 as indicated in "Piping Applications" Article.

D. Cast-Iron Pipe Flanges and Flanged Fittings: ASME B16.1, Classes 25, 125, and 250; raised ground face, and bolt holes spot faced as indicated in "Piping Applications" Article.

E. Wrought-Steel Fittings: ASTM A 234/A 234M, wall thickness to match adjoining pipe.

F. Wrought Cast- and Forged-Steel Flanges and Flanged Fittings: ASME B16.5, including bolts, nuts, and gaskets of the following material group, end connections, and facings:

1. Material Group: 1.1.
2. End Connections: Butt welding.
3. Facings: Raised face.

G. Grooved Mechanical-Joint Fittings and Couplings:

1. Manufacturers: Subject to compliance with requirements, provide products by one of the following:

a. Anvil International.
b. Central Sprinkler Company.
c. Victaulic Company.

2. Joint Fittings: ASTM A 536, Grade 65-45-12 ductile iron; ASTM A 47/A 47M, Grade 32510 malleable iron; ASTM A 53/A 53M, Type F, E, or S, Grade B fabricated steel; or ASTM A 106/A 106M, Grade B steel fittings with grooves or shoulders constructed to accept grooved-end couplings; with nuts, bolts, locking pin, locking toggle, or lugs to secure grooved pipe and fittings.

3. Couplings: Ductile- or malleable-iron housing and EPDM gasket of central cavity pressure-responsive design; with nuts, bolts, locking pin, locking toggle, or lugs to secure grooved pipe and fittings.

H. Steel Pipe Nipples: ASTM A 733, made of same materials and wall thicknesses as pipe in which they are installed.

2.4 JOINING MATERIALS

A. Pipe-Flange Gasket Materials: Suitable for chemical and thermal conditions of piping system contents.

1. ASME B16.21, nonmetallic, flat, asbestos free, 1/8-inch maximum thickness unless otherwise indicated.

a. Full-Face Type: For flat-face, Class 125, cast-iron and cast-bronze flanges.
b. Narrow-Face Type: For raised-face, Class 250, cast-iron and steel flanges.

B. Flange Bolts and Nuts: ASME B18.2.1, carbon steel, unless otherwise indicated.

C. Brazing Filler Metals: AWS A5.8/A5.8M, BCuP Series, copper-phosphorus alloys for joining copper with copper; or BAg-1, silver alloy for joining copper with bronze or steel.

D. Welding Filler Metals: Comply with AWS D10.12M/D10.12 for welding materials appropriate for wall thickness and chemical analysis of steel pipe being welded.

E. Gasket Material: Thickness, material, and type suitable for fluid to be handled and working temperatures and pressures.

2.5 TRANSITION FITTINGS

A. Plastic-to-Metal Transition Fittings:

1. Manufacturers: Subject to compliance with requirements, provide products by one of the following:

   a. Charlotte Pipe and Foundry Company.
   b. Viega LLC.

2. One-piece fitting with one threaded brass or copper insert and one solvent-cement-joint end of material and wall thickness to match plastic pipe material.

B. Plastic-to-Metal Transition Unions:

1. Manufacturers: Subject to compliance with requirements, provide products by one of the following:

   a. Charlotte Pipe and Foundry Company.
   b. NIBCO INC.

2. Brass or copper end, solvent-cement-joint end of material and wall thickness to match plastic pipe material, rubber gasket, and threaded union.

2.6 DIELECTRIC FITTINGS

A. General Requirements: Assembly of copper alloy and ferrous materials with separating nonconductive insulating material. Include end connections compatible with pipes to be joined.

B. Dielectric Unions:

1. Manufacturers: Subject to compliance with requirements, provide products by one of the following:

   a. Watts; a Watts Water Technologies company.
   b. Wilkins.
   c. Zurn Industries, LLC.

2. Description:

a. Standard: ASSE 1079.
b. Pressure Rating: 250 psig.
c. End Connections: Solder-joint copper alloy and threaded ferrous.

C. Dielectric Flanges:

1. Manufacturers: Subject to compliance with requirements, provide products by one of the following:

a. Watts; a Watts Water Technologies company.
b. Wilkins.
c. Zurn Industries, LLC.

2. Description:

a. Standard: ASSE 1079.
b. Factory-fabricated, bolted, companion-flange assembly.
c. Pressure Rating: 175 psig.
d. End Connections: Solder-joint copper alloy and threaded ferrous; threaded solder-joint copper alloy and threaded ferrous.

D. Dielectric-Flange Insulating Kits:

1. Manufacturers: Subject to compliance with requirements, provide products by one of the following:

a. Advance Products & Systems, Inc.
b. Central Plastics Company.
c. Pipeline Seal and Insulator, Inc.

2. Description:

a. Nonconducting materials for field assembly of companion flanges.
b. Pressure Rating: 150 psig.
c. Gasket: Neoprene or phenolic.
d. Bolt Sleeves: Phenolic or polyethylene.
e. Washers: Phenolic with steel backing washers.

E. Dielectric Nipples:

1. Manufacturers: Subject to compliance with requirements, provide products by one of the following:

a. Grinnell Mechanical Products.
b. Victaulic Company.

2. Description:

a. Standard: IAPMO PS 66.
b. Electroplated steel nipple, complying with ASTM F 1545.
c. Pressure Rating: 300 psig at 225 deg F.

d. End Connections: Male threaded or grooved.
e. Lining: Inert and noncorrosive, propylene.

PART 3 - EXECUTION

3.1 PIPING APPLICATIONS

A. Chilled-water piping, aboveground, NPS 2 and smaller, shall be any of the following:

1. Type L, drawn-temper copper tubing, wrought-copper fittings, and soldered joints.
2. Schedule 40 steel pipe; Class 150, malleable-iron fittings; cast-iron flanges and flange fittings; and threaded joints.

B. Chilled-water piping, aboveground, NPS 2-1/2 and larger, shall be the following:
1. Schedule 40 steel pipe, wrought-steel fittings and wrought-cast or forged-steel flanges and flange fittings, and welded and flanged joints.

C. Makeup-water piping installed aboveground shall be the following:

1. Type L, drawn-temper copper tubing, wrought-copper fittings, and soldered joints.

D. Makeup-Water Piping Installed Belowground and within Slabs: Type K, annealed-temper copper tubing, wrought-copper fittings, and soldered joints. Use the fewest possible joints.

E. Condensate-Drain Piping: Type L, drawn-temper copper tubing, wrought-copper fittings, and soldered joints.

F. Blowdown-Drain Piping: Same materials and joining methods as for piping specified for the service in which blowdown drain is installed.

G. Air-Vent Piping:

1. Inlet: Same as service where installed with metal-to-plastic transition fittings for plastic piping systems according to piping manufacturer's written instructions.
2. Outlet: Type K, annealed-temper copper tubing with soldered or flared joints.

3.2 PIPING INSTALLATIONS

A. Drawing plans, schematics, and diagrams indicate general location and arrangement of piping systems. Install piping as indicated unless deviations to layout are approved on Coordination Drawings.

B. Install piping in concealed locations unless otherwise indicated and except in equipment rooms and service areas.

C. Install piping indicated to be exposed and piping in equipment rooms and service areas at right angles or parallel to building walls. Diagonal runs are prohibited unless specifically indicated otherwise.

D. Install piping above accessible ceilings to allow sufficient space for ceiling panel removal.

E. Install piping to permit valve servicing.

F. Install piping at indicated slopes.

G. Install piping free of sags and bends.

H. Install fittings for changes in direction and branch connections.

I. Install piping to allow application of insulation.

J. Select system components with pressure rating equal to or greater than system operating pressure.

K. Install groups of pipes parallel to each other, spaced to permit applying insulation and servicing of valves.

L. Install drains, consisting of a tee fitting, NPS 3/4 ball valve, and short NPS 3/4 threaded nipple with cap, at low points in piping system mains and elsewhere as required for system drainage.

M. Install piping at a uniform grade of 0.2 percent upward in direction of flow.

N. Reduce pipe sizes using eccentric reducer fitting installed with level side up.

O. Install branch connections to mains using tee fittings in main pipe, with the branch connected to the bottom of the main pipe. For up-feed risers, connect the branch to the top of the main pipe.

P. Install valves according to Div. 23 sections.

Q. Install unions in piping, NPS 2 and smaller, adjacent to valves, at final connections of equipment, and elsewhere as indicated.

R. Install flanges in piping, NPS 2-1/2 and larger, at final connections of equipment and elsewhere as indicated.

S. Install shutoff valve immediately upstream of each dielectric fitting.

T. Comply with requirements in Section 230516 "Expansion Fittings and Loops for HVAC Piping" for installation of expansion loops, expansion joints, anchors, and pipe alignment guides.

U. Comply with requirements in Section 230553 "Identification for HVAC Piping and Equipment" for identifying piping.

V. Install sleeves for piping penetrations of walls, ceilings, and floors. Comply with requirements for sleeves specified in Section 230517 "Sleeves and Sleeve Seals for HVAC Piping."

W. Install sleeve seals for piping penetrations of concrete walls and slabs. Comply with requirements for sleeve seals specified in Section 230517 "Sleeves and Sleeve Seals for HVAC Piping."

X. Install escutcheons for piping penetrations of walls, ceilings, and floors. Comply with requirements for escutcheons specified in Section 230518 "Escutcheons for HVAC Piping."

3.3 DIELECTRIC FITTING INSTALLATION

A. Install dielectric fittings in piping at connections of dissimilar metal piping and tubing.

B. Dielectric Fittings for NPS 2 and Smaller: Use dielectric unions.

C. Dielectric Fittings for NPS 2-1/2 to NPS 4: Use dielectric flanges.

D. Dielectric Fittings for NPS 5 and Larger: Use dielectric flange kits.

3.4 HANGERS AND SUPPORTS

A. Comply with requirements in Section 230529 "Hangers and Supports for HVAC Piping and Equipment" for hanger, support, and anchor devices. Comply with the following requirements for maximum spacing of supports.

B. Install the following pipe attachments:

1. Adjustable steel clevis hangers for individual horizontal piping less than 20 feet long.
2. Adjustable roller hangers and spring hangers for individual horizontal piping 20 feet or longer.
3. Pipe Roller: MSS SP-58, Type 44 for multiple horizontal piping 20 feet or longer, supported on a trapeze.
4. Spring hangers to support vertical runs.
5. Provide copper-clad hangers and supports for hangers and supports in direct contact with copper pipe.

C. Install hangers for steel piping with the following maximum spacing and minimum rod sizes:

1. NPS 3/4: Maximum span, 7 feet.
2. NPS 1: Maximum span, 7 feet.
3. NPS 1-1/2: Maximum span, 9 feet.
4. NPS 2: Maximum span, 10 feet.
5. NPS 2-1/2: Maximum span, 11 feet.
6. NPS 3 and Larger: Maximum span, 12 feet.

D. Install hangers for drawn-temper copper piping with the following maximum spacing and minimum rod sizes:

1. NPS 3/4: Maximum span, 5 feet; minimum rod size, 1/4 inch.
2. NPS 1: Maximum span, 6 feet; minimum rod size, 1/4 inch.
3. NPS 1-1/4Maximum span, 7 feet; minimum rod size, 3/8 inch.
4. NPS 1-1/2: Maximum span, 8 feet; minimum rod size, 3/8 inch.
5. NPS 2: Maximum span, 8 feet; minimum rod size, 3/8 inch.
6. NPS 2-1/2: Maximum span, 9 feet; minimum rod size, 3/8 inch.
7. NPS 3 and Larger: Maximum span, 10 feet; minimum rod size, 3/8 inch.

E. Support vertical runs at roof, at each floor, and at 10-foot intervals between floors.

3.5 PIPE JOINT CONSTRUCTION

A. Ream ends of pipes and tubes and remove burrs. Bevel plain ends of steel pipe.

B. Remove scale, slag, dirt, and debris from inside and outside of pipe and fittings before assembly.

C. Brazed Joints: Construct joints according to AWS's "Brazing Handbook," "Pipe and Tube" Chapter, using copper-phosphorus brazing filler metal complying with AWS A5.8/A5.8M.

D. Threaded Joints: Thread pipe with tapered pipe threads according to ASME B1.20.1. Cut threads full and clean using sharp dies. Ream threaded pipe ends to remove burrs and restore full ID. Join pipe fittings and valves as follows:

1. Apply appropriate tape or thread compound to external pipe threads unless dry seal threading is specified.
2. Damaged Threads: Do not use pipe or pipe fittings with threads that are corroded or damaged. Do not use pipe sections that have cracked or open welds.

E. Welded Joints: Construct joints according to AWS D10.12M/D10.12, using qualified processes and welding operators according to "Quality Assurance" Article.

F. Flanged Joints: Select appropriate gasket material, size, type, and thickness for service application. Install gasket concentrically positioned. Use suitable lubricants on bolt threads.

G. Grooved Joints: Assemble joints with coupling and gasket, lubricant, and bolts. Cut or roll grooves in ends of pipe based on pipe and coupling manufacturer's written instructions for pipe wall thickness. Use grooved-end fittings and rigid, grooved-end-pipe couplings.

3.6 TERMINAL EQUIPMENT CONNECTIONS

A. Sizes for supply and return piping connections shall be the same as or larger than equipment connections.

B. Install control valves in accessible locations close to connected equipment.

C. Install bypass piping with globe valve around control valve. If parallel control valves are installed, only one bypass is required.

D. Install ports for pressure gages and thermometers at coil inlet and outlet connections. Comply with requirements in Section 230519 "Meters and Gages for HVAC Piping."

3.7 FIELD QUALITY CONTROL

A. Prepare hydronic piping according to ASME B31.9 and as follows:

1. Leave joints, including welds, uninsulated and exposed for examination during test.

2. Provide temporary restraints for expansion joints that cannot sustain reactions due to test pressure. If temporary restraints are impractical, isolate expansion joints from testing.
3. Flush hydronic piping systems with clean water; then remove and clean or replace strainer screens.
4. Isolate equipment from piping. If a valve is used to isolate equipment, its closure shall be capable of sealing against test pressure without damage to valve. Install blinds in flanged joints to isolate equipment.
5. Install safety valve, set at a pressure no more than one-third higher than test pressure, to protect against damage by expanding liquid or other source of overpressure during test.

B. Perform the following tests on hydronic piping:

1. Use ambient temperature water as a testing medium unless there is risk of damage due to freezing. Another liquid that is safe for workers and compatible with piping may be used.
2. While filling system, use vents installed at high points of system to release air. Use drains installed at low points for complete draining of test liquid.
3. Isolate expansion tanks and determine that hydronic system is full of water.
4. Subject piping system to hydrostatic test pressure that is not less than 1.5 times the system's working pressure. Test pressure shall not exceed maximum pressure for any vessel, pump, valve, or other component in system under test. Verify that stress due to pressure at bottom of vertical runs does not exceed 90 percent of specified minimum yield strength or 1.7 times the "SE" value in Appendix A in ASME B31.9, "Building Services Piping."
5. After hydrostatic test pressure has been applied for at least 10 minutes, examine piping, joints, and connections for leakage. Eliminate leaks by tightening, repairing, or replacing components, and repeat hydrostatic test until there are no leaks.
6. Prepare written report of testing.

C. Perform the following before operating the system:

1. Open manual valves fully.
2. Inspect pumps for proper rotation.
3. Set makeup pressure-reducing valves for required system pressure.
4. Inspect air vents at high points of system and determine if all are installed and operating freely (automatic type), or bleed air completely (manual type).
5. Set temperature controls so all coils are calling for full flow.
6. Inspect and set operating temperatures of hydronic equipment, such as boilers, chillers, cooling towers, to specified values.
7. Verify lubrication of motors and bearings.

END OF SECTION 232113

SECTION 232116 - HYDRONIC PIPING SPECIALTIES

PART 1 - GENERAL

1.1 RELATED DOCUMENTS

A. Drawings and general provisions of the Contract, including General and Supplementary Conditions and Division 01 Specification Sections, apply to this Section.

1.2 SUMMARY

A. Section includes special-duty valves and specialties for the following:
   1. Chilled-water piping.
   2. Makeup-water piping.
   3. Air-vent piping.
   4. Safety-valve-inlet and -outlet piping.

1.3 ACTION SUBMITTALS

A. Product Data: For each type of the following:
   1. Valves: Include flow and pressure drop curves based on manufacturer's testing for calibrated-orifice balancing valves and automatic flow-control valves.
   2. Air-control devices.
   3. Hydronic specialties.

1.4 CLOSEOUT SUBMITTALS

A. Operation and Maintenance Data: For air-control devices, hydronic specialties, and special-duty valves to include in emergency, operation, and maintenance manuals.

1.5 MAINTENANCE MATERIAL SUBMITTALS

A. Differential Pressure Meter: For each type of balancing valve and automatic flow control valve, include flowmeter, probes, hoses, flow charts, and carrying case.

1.6 QUALITY ASSURANCE

A. Pipe Welding: Qualify procedures and operators according to ASME Boiler and Pressure Vessel Code: Section IX.
   1. Safety valves and pressure vessels shall bear the appropriate ASME label. Fabricate and stamp air separators and expansion tanks to comply with ASME Boiler and Pressure Vessel Code: Section VIII, Division 1.

SECTION 232116 - HYDRONIC PIPING SPECIALTIES

PART 2 - PRODUCTS

2.1 PERFORMANCE REQUIREMENTS

A. Hydronic piping components and installation shall be capable of withstanding the following minimum working pressure and temperature unless otherwise indicated:
   1. Chilled-Water Piping: 175 psig at 200 deg F.
   2. Makeup-Water Piping: 80 psig at 150 deg F.
   3. Air-Vent Piping: 200 deg F.
   4. Safety-Valve-Inlet and -Outlet Piping: Equal to the pressure of the piping system to which it is attached.

2.2 VALVES

A. Gate, Globe, Check, Ball, and Butterfly Valves: Comply with requirements specified in Division 23 Sections.

B. Automatic Temperature-Control Valves, Actuators, and Sensors: Comply with requirements specified in Section 230900.

C. Cast-Iron or Steel, Calibrated-Orifice, Balancing Valves:

   1. Manufacturers: Subject to compliance with requirements, provide products by one of the following:

      a. Armstrong Pumps, Inc.
      b. Bell & Gossett; a Xylem brand.
      c. Flow Design, Inc.
      d. Griswold Controls.
      e. Grundfos
      f. Nexus Valve, Inc.
      g. Taco.

   2. Body: Cast-iron or steel body, ball, plug, or globe pattern with calibrated orifice or venturi.
   3. Ball: Stainless steel.
   4. Stem Seals: EPDM O-rings.
   5. Disc: Glass and carbon-filled PTFE.
   6. Seat: PTFE.
   7. End Connections: Flanged or grooved.
   8. Pressure Gage Connections: Integral seals for portable differential pressure meter.
   9. Handle Style: Lever, with memory stop to retain set position.
   10. CWP Rating: Minimum 125 psig.
   11. Maximum Operating Temperature: 250 deg F.

D. Diaphragm-Operated, Pressure-Reducing Valves: ASME labeled.

   1. Manufacturers: Subject to compliance with requirements, provide products by one of the following:

a. AMTROL, Inc.
b. Armstrong Pumps, Inc.
c. Bell & Gossett; a Xylem brand.
d. Grundfos
e. Watts; a Watts Water Technologies company.

2. Body: Bronze or brass.
3. Disc: Glass and carbon-filled PTFE.
4. Seat: Brass.
5. Stem Seals: EPDM O-rings.
6. Diaphragm: EPT.
7. Low inlet-pressure check valve.
8. Inlet Strainer: Stainless steel, removable without system shutdown.
9. Valve Seat and Stem: Noncorrosive.
10. Valve Size, Capacity, and Operating Pressure: Selected to suit system in which installed, with operating pressure and capacity factory set and field adjustable.

E. Diaphragm-Operated Safety Valves: ASME labeled.

1. Manufacturers: Subject to compliance with requirements, provide products by one of the following:

a. AMTROL, Inc.
b. Armstrong Pumps, Inc.
c. Bell & Gossett; a Xylem brand.
d. Grundfos
e. Watts; a Watts Water Technologies company.

2. Body: Bronze or brass.
3. Disc: Glass and carbon-filled PTFE.
4. Seat: Brass.
5. Stem Seals: EPDM O-rings.
6. Diaphragm: EPT.
7. Wetted, Internal Work Parts: Brass and rubber.
8. Inlet Strainer: Stainless steel, removable without system shutdown.
9. Valve Seat and Stem: Noncorrosive.
10. Valve Size, Capacity, and Operating Pressure: Comply with ASME Boiler and Pressure Vessel Code: Section IV, and selected to suit system in which installed, with operating pressure and capacity factory set and field adjustable.

F. Automatic Flow-Control Valves:

1. Manufacturers: Subject to compliance with requirements, provide products by one of the following:

a. Flow Design, Inc.
b. Griswold Controls.
c. Grundfos
d. Nexus Valve, Inc.

2. Body: Brass or ferrous metal.

3. Piston and Spring Assembly: Stainless steel, tamper proof, self-cleaning, and removable.
4. Combination Assemblies: Include bronze or brass-alloy ball valve.
5. Identification Tag: Marked with zone identification, valve number, and flow rate.
6. Size: Same as pipe in which installed.
7. Performance: Maintain constant flow, plus or minus 5 percent over system pressure fluctuations.
8. Minimum CWP Rating: 175 psig.
9. Maximum Operating Temperature: 200 deg F.

2.3 AIR-CONTROL DEVICES

A. Manual Air Vents:

1. Manufacturers: Subject to compliance with requirements, provide products by one of the following:

    a. AMTROL, Inc.
    b. Armstrong Pumps, Inc.
    c. Bell & Gossett; a Xylem brand.
    d. Grundfos
    e. Nexus Valve, Inc.
    f. Taco, Inc.

2. Body: Bronze.
3. Internal Parts: Nonferrous.
4. Operator: Screwdriver or thumbscrew.
5. Inlet Connection: NPS 1/2.
6. Discharge Connection: NPS 1/8.
7. CWP Rating: 150 psig.
8. Maximum Operating Temperature: 225 deg F.

B. Automatic Air Vents:

1. Manufacturers: Subject to compliance with requirements, provide products by one of the following:

    a. AMTROL, Inc.
    b. Armstrong Pumps, Inc.
    c. Bell & Gossett; a Xylem brand.
    d. Grundfos
    e. Nexus Valve, Inc.
    f. Taco, Inc.

2. Body: Bronze.
3. Internal Parts: Nonferrous.
4. Operator: Noncorrosive metal float.
5. Inlet Connection: NPS 1/2.
6. Discharge Connection: NPS 1/4.
7. CWP Rating: 150 psig.
8. Maximum Operating Temperature: 240 deg F.

C. Bladder-Type Expansion Tanks:

1. Manufacturers: Subject to compliance with requirements, provide products by one of the following:

    a. AMTROL, Inc.
    b. Armstrong Pumps, Inc.
    c. Bell & Gossett; a Xylem brand.
    d. Grundfos
    e. Taco, Inc.

2. Tank: Welded steel, rated for 125-psig working pressure and 375 deg F maximum operating temperature. Factory test after taps are fabricated and supports installed and are labeled according to ASME Boiler and Pressure Vessel Code: Section VIII, Division 1.
3. Bladder: Securely sealed into tank to separate air charge from system water to maintain required expansion capacity.
4. Air-Charge Fittings: Schrader valve, stainless steel with EPDM seats.

D. Tangential-Type Air Separators:

1. Manufacturers: Subject to compliance with requirements, provide products by one of the following:

    a. AMTROL, Inc.
    b. Armstrong Pumps, Inc.
    c. Bell & Gossett; a Xylem brand.
    d. Grundfos
    e. Taco, Inc.

2. Tank: Welded steel; ASME constructed and labeled for 125-psig minimum working pressure and 375 deg F maximum operating temperature.
3. Air Collector Tube: Perforated stainless steel, constructed to direct released air into expansion tank.
4. Tangential Inlet and Outlet Connections: Threaded for NPS 2 and smaller; flanged connections for NPS 2-1/2 and larger.
5. Blowdown Connection: Threaded.
6. Size: Match system flow capacity.

E. In-Line Air Separators:

1. Manufacturers: Subject to compliance with requirements, provide products by one of the following:

    a. AMTROL, Inc.
    b. Armstrong Products, Inc.
    c. Bell & Gossett; a Xylem brand.
    d. Grundfos
    e. Taco, Inc.

2. Tank: One-piece cast iron with an integral weir constructed to decelerate system flow to maximize air separation.

3. Maximum Working Pressure: Up to 175 psig.
4. Maximum Operating Temperature: Up to 300 deg F.

F. Air Purgers:

1. Manufacturers: Subject to compliance with requirements, provide products by one of the following:

   a. AMTROL, Inc.
   b. Armstrong Pumps, Inc.
   c. Bell & Gossett, a Xylem brand.
   d. Grundfos
   e. Taco, Inc.

2. Body: Cast iron with internal baffles that slow the water velocity to separate the air from solution and divert it to the vent for quick removal.
3. Maximum Working Pressure: 150 psig.
4. Maximum Operating Temperature: 250 deg F.

2.4 HYDRONIC PIPING SPECIALTIES

A. Y-Pattern Strainers:
1. Body: ASTM A 126, Class B, cast iron with bolted cover and bottom drain connection.
2. End Connections: Threaded ends for NPS 2 and smaller; flanged ends for NPS 2-1/2 and larger.
3. Strainer Screen: Stainless-steel, 40-mesh strainer, or perforated stainless-steel basket.
4. CWP Rating: 125 psig.

B. Basket Strainers:
1. Body: ASTM A 126, Class B, high-tensile cast iron with bolted cover and bottom drain connection.
2. End Connections: Threaded ends for NPS 2 and smaller; flanged ends for NPS 2-1/2 and larger.
3. Strainer Screen: 40-mesh startup strainer, and perforated stainless-steel basket with 50 percent free area.
4. CWP Rating: 125 psig.

C. Stainless-Steel Bellow, Flexible Connectors:
1. Body: Stainless-steel bellows with woven, flexible, bronze, wire-reinforcing protective jacket.
2. End Connections: Threaded or flanged to match equipment connected.
3. Performance: Capable of 3/4-inch misalignment.
4. CWP Rating: 150 psig.
5. Maximum Operating Temperature: 250 deg F.

D. Spherical, Rubber, Flexible Connectors:
1. Body: Fiber-reinforced rubber body.
2. End Connections: Steel flanges drilled to align with Classes 150 and 300 steel flanges.
3. Performance: Capable of misalignment.
4. CWP Rating: 150 psig.

5. Maximum Operating Temperature: 250 deg F.

E. Expansion Fittings: Comply with requirements in Section 230516 "Expansion Fittings and Loops for HVAC Piping." Section 15124 "Expansion Fittings and Loops for HVAC Piping."

PART 3 - EXECUTION

3.1 VALVE APPLICATIONS

A. Install shutoff-duty valves at each branch connection to supply mains and at supply connection to each piece of equipment.

B. Install calibrated-orifice, balancing valves at each branch connection to return main.

C. Install calibrated-orifice, balancing valves in the return pipe of each heating or cooling terminal.

D. Install check valves at each pump discharge and elsewhere as required to control flow direction.

E. Install safety valves at hot-water generators and elsewhere as required by ASME Boiler and Pressure Vessel Code. Install drip-pan elbow on safety-valve outlet and pipe without valves to the outdoors; pipe drain to nearest floor drain or as indicated on Drawings. Comply with ASME Boiler and Pressure Vessel Code: Section VIII, Division 1, for installation requirements.

F. Install pressure-reducing valves at makeup-water connection to regulate system fill pressure.

3.2 HYDRONIC SPECIALTIES INSTALLATION

A. Install manual air vents at high points in piping, at heat-transfer coils, and elsewhere as required for system air venting.

B. Install automatic air vents at high points of system piping in mechanical equipment rooms only. Install manual vents at heat-transfer coils and elsewhere as required for air venting.

C. Install piping from air separator, or air purger to expansion tank with a 2 percent upward slope toward tank.

D. Install in-line air separators in pump suction. Install drain valve on air separators NPS 2 and larger.

E. Install tangential air separator in pump suction. Install blowdown piping with gate or full-port ball valve; extend full size to nearest floor drain.

F. Install expansion tanks on the floor. Vent and purge air from hydronic system, and ensure that tank is properly charged with air to suit system Project requirements.

END OF SECTION 232116

SECTION 232123 - HYDRONIC PUMPS

PART 1 - GENERAL

1.1 RELATED DOCUMENTS

A. Drawings and general provisions of the Contract, including General and Supplementary Conditions and Division 01 Specification Sections, apply to this Section.

1.2 SUMMARY

A. Section Includes: Separately coupled, base-mounted, end-suction centrifugal pumps.

1.3 DEFINITIONS

A. Buna-N: Nitrile rubber.

B. EPT: Ethylene propylene terpolymer.

1.4 ACTION SUBMITTALS

A. Product Data: For each type of pump. Include certified performance curves and rated capacities, operating characteristics, furnished specialties, final impeller dimensions, and accessories for each type of product indicated. Indicate pump's operating point on curves.

B. Shop Drawings: For each pump.
   1. Show pump layout and connections.
   2. Include setting drawings with templates for installing base rail, anchor bolts and other anchorages.
   3. Include diagrams for power, signal, and control wiring.

1.5 CLOSEOUT SUBMITTALS

A. Operation and Maintenance Data: Include in emergency, operation, and maintenance manuals.

1.6 QUALITY ASSURANCE

A. Source Limitations: Obtain hydronic pumps through one source from a single manufacturer.

B. Product Options: Drawings indicate size, profiles, and dimensional requirements of hydronic pumps and are based on the specific system indicated. Refer to Division 01 Section "Product Requirements."

C. Electrical Components, Devices, and Accessories: Listed and labeled as defined in NFPA 70, Article 100, by a testing agency acceptable to authorities having jurisdiction, and marked for intended use.

D. UL Compliance: Comply with UL 778 for motor-operated water pumps.

1.7 DELIVERY, STORAGE, AND HANDLING

A. Manufacturer's Preparation for Shipping: Clean flanges and exposed machined metal surfaces and treat with anticorrosion compound after assembly and testing. Protect flanges, pipe openings, and nozzles with wooden flange covers or with screwed-in plugs.

B. Store pumps in dry location.

C. Retain protective covers for flanges and protective coatings during storage.

D. Protect bearings and couplings against damage from sand, grit, and other foreign matter.

E. Comply with pump manufacturer's written rigging instructions.

1.8 COORDINATION

A. Coordinate size and location of concrete bases. Cast anchor-bolt inserts into bases. Concrete, reinforcement, and formwork requirements are specified in Division 03.

1.9 MAINTENANCE MATERIAL SUBMITTALS

A. Furnish extra materials described below that match products installed and that are packaged with protective covering for storage and identified with labels describing contents.
   1. Mechanical Seals: One mechanical seal(s) for each pump.

PART 2 - PRODUCTS

2.1 SEPARATELY COUPLED, BASE-MOUNTED, END-SUCTION CENTRIFUGAL PUMPS

A. Manufacturers: Subject to compliance with requirements, provide products by one of the following:
   1. Armstrong Pumps, Inc.
   2. ITT Corporation.
   3. TACO Incorporated.
   4. Grundfos.

B. Description: Factory-assembled and -tested, centrifugal, overhung-impeller, separately coupled, end-suction pump as defined in HI 1.1-1.2 and HI 1.3; designed for base mounting, with pump and motor shafts horizontal. Rate pump for 175-psig minimum working pressure and a continuous water temperature of 225 deg F. Rate pump for exterior location.

C. Pump Construction:
   1. Casing: Radially split, cast iron, with replaceable bronze wear rings, threaded gage tappings at inlet and outlet, drain plug at bottom and air vent at top of volute, and flanged connections. Provide integral mount on volute to support the casing, and provide attached

piping to allow removal and replacement of impeller without disconnecting piping or requiring the realignment of pump and motor shaft.

2. Impeller: ASTM B 584, cast bronze; statically and dynamically balanced, keyed to shaft, and secured with a locking cap screw. For pumps not frequency-drive controlled, trim impeller to match specified performance.
3. Pump Shaft: Stainless steel.
4. Seal: Mechanical seal consisting of carbon rotating ring against a ceramic seat held by a stainless-steel spring, and EPT bellows and gasket.
5. Pump Bearings: Grease-lubricated ball bearings in cast-iron housing with grease fittings.

D. Shaft Coupling: Molded-rubber insert and interlocking spider capable of absorbing vibration. Couplings shall be drop-out type to allow disassembly and removal without removing pump shaft or motor. EPDM coupling sleeve for variable-speed applications.

E. Coupling Guard: Dual rated; ANSI B15.1, Section 8; OSHA 1910.219 approved; steel; removable; attached to mounting frame.

F. Mounting Frame: Welded-steel frame and cross members, factory fabricated from ASTM A 36/A 36M channels and angles. Fabricate to mount pump casing, coupling guard, and motor.

G. Motor: Single speed, secured to mounting frame, with adjustable alignment.
1. Electrical Components, Devices, and Accessories: Listed and labeled as defined in NFPA 70, by a qualified testing agency, and marked for intended location and application.
2. Comply with NEMA designation, temperature rating, service factor, and efficiency requirements for motors specified in Section 230513 "Common Motor Requirements for HVAC Equipment."
    a. Enclosure: Totally enclosed, fan cooled.
    b. Motor Bearings: Permanently lubricated ball bearings.
    c. Efficiency: Premium efficient.
    d. Rated for VFD duty and with shaft grounding device.

H. Capacities and Characteristics: See drawings.

2.2 PUMP SPECIALTY FITTINGS

A. Suction Diffuser:
1. Angle pattern.
2. 175-psig pressure rating, iron body and end cap, pump-inlet fitting.
3. Bronze startup and stainless-steel permanent strainers.
4. Stainless-steel straightening vanes.
5. Drain plug.
6. Factory-fabricated support.

PART 3 - EXECUTION

3.1 EXAMINATION

A. Examine equipment foundations and anchor-bolt locations for compliance with requirements for installation tolerances and other conditions affecting performance of the Work.

B. Examine roughing-in for piping systems to verify actual locations of piping connections before pump installation.

C. Examine foundations and inertia bases for suitable conditions where pumps are to be installed.

D. Proceed with installation only after unsatisfactory conditions have been corrected.

3.2 PUMP INSTALLATION

A. Comply with HI 1.4 and HI 2.4.

B. Install pumps to provide access for periodic maintenance including removing motors, impellers, couplings, and accessories.

C. Independently support pumps and piping so weight of piping is not supported by pumps and weight of pumps is not supported by piping.

D. Equipment Mounting:
   1. Install base-mounted pumps on structural equipment bases. Coordinate with structural.
   2. Comply with requirements for vibration isolation devices specified in Section 230548.13 "Vibration Controls for HVAC."

3.3 ALIGNMENT

A. Engage a factory-authorized service representative to perform alignment service.
   1. Certified Representative to Laser Align pump and motor shafts and piping connections after setting on foundation, grout has been set and foundation bolts have been tightened, and piping connections have been made.
   2. Laser alignment printed report and certification shall be furnished.

B. Comply with requirements in Hydronics Institute standards for alignment of pump and motor shaft. Add shims to the motor feet and bolt motor to base frame. Do not use grout between motor feet and base frame.

C. Comply with pump and coupling manufacturers' written instructions.

D. After alignment is correct, tighten foundation bolts evenly but not too firmly. Completely fill baseplate with nonshrink, nonmetallic grout while metal blocks and shims or wedges are in place. After grout has cured, fully tighten foundation bolts.

3.4 CONNECTIONS

A. Piping installation requirements are specified in other Division 23 Sections. Drawings indicate general arrangement of piping, fittings, and specialties.

B. Where installing piping adjacent to pump, allow space for service and maintenance.

C. Connect piping to pumps. Install valves that are same size as piping connected to pumps.

D. Install suction and discharge pipe sizes equal to or greater than diameter of pump nozzles.

E. Install check, shutoff, and throttling valves on discharge side of pumps.

F. Install suction diffuser and shutoff valve on suction side of pumps.

G. Install flexible connectors on suction and discharge sides of base-mounted pumps between pump casing and valves.

H. Install pressure gages on pump suction and discharge or at integral pressure-gage tapping, or install single gage with multiple-input selector valve.

I. Install check valve and gate or ball valve on each condensate pump unit discharge.

J. Ground equipment according to Sect. 260526 "Grounding and Bonding for Electrical Systems." Connect wiring according to Sect. 260519 "Low-Voltage Electrical Power Conductors and Cables."

3.5 STARTUP SERVICE

A. Engage a factory-authorized service representative to perform startup service.
   1. Complete installation and startup checks according to manufacturer's written instructions.
   2. Check piping connections for tightness.
   3. Clean strainers on suction piping.
   4. Perform the following startup checks for each pump before starting:
      a. Verify bearing lubrication.
      b. Verify that pump is free to rotate by hand and that pump for handling hot liquid is free to rotate with pump hot and cold. If pump is bound or drags, do not operate until cause of trouble is determined and corrected.
      c. Verify that pump is rotating in the correct direction.
   5. Prime pump by opening suction valves and closing drains, and prepare for operation.
   6. Start motor.
   7. Open discharge valve slowly.

3.6 DEMONSTRATION

A. Engage a factory-authorized service representative to train Owner's maintenance personnel to adjust, operate, and maintain hydronic pumps.

END OF SECTION 232123

SECTION 232513 - WATER TREATMENT FOR CLOSED-LOOP HYDRONIC SYSTEMS

PART 1 - GENERAL

1.1 RELATED DOCUMENTS

A. Drawings and general provisions of the Contract, including General and Supplementary Conditions and Division 01 Specification Sections, apply to this Section.

1.2 SUMMARY

A. Section includes the following water treatment for closed-loop hydronic systems:

1. Manual chemical-feed equipment.
2. Chemicals.

1.3 DEFINITIONS

A. Low Voltage: As defined in NFPA 70 for circuits and equipment operating at less than 50 V or for remote-control, signaling power-limited circuits.

B. RO: Reverse osmosis.

C. TSS: Total suspended solids are solid materials, including organic and inorganic, that are suspended in the water. These solids may include silt, plankton, and industrial wastes.

1.4 ACTION SUBMITTALS

A. Product Data: Include rated capacities, operating characteristics, and furnished specialties and accessories for the following products:

1. Bypass feeders.
2. Water meters.
3. Chemical test equipment.
4. Chemical material safety data sheets.

B. Shop Drawings: Pretreatment and chemical treatment equipment showing tanks, maintenance space required, and piping connections to hydronic systems.

1. Include plans, elevations, sections, and attachment details.
2. Include diagrams for power, signal, and control wiring.

1.5 INFORMATIONAL SUBMITTALS

A. Water Analysis Provider Qualifications: Verification of experience and capability of HVAC water-treatment service provider.

B. Field quality-control reports.

C. Other Informational Submittals:

1. Water-Treatment Program: Written sequence of operation on an annual basis for the application equipment required to achieve water quality defined in "Performance Requirements" Article.
2. Water Analysis: Illustrate water quality available at Project site.

1.6 CLOSEOUT SUBMITTALS

A. Operation and Maintenance Data: For sensors, injection pumps, and controllers to include in emergency, operation, and maintenance manuals.

1.7 QUALITY ASSURANCE

A. HVAC Water-Treatment Service Provider Qualifications: An experienced HVAC water-treatment service provider capable of analyzing water qualities, installing water-treatment equipment, and applying water treatment as specified in this Section.

B. Contractor shall have a local office within 75 miles of the project site.

1.8 MAINTENANCE SERVICE

A. Scope of Maintenance Service: Provide chemicals and service program to maintain water conditions required above to inhibit corrosion and scale formation for hydronic piping and equipment. Services and chemicals shall be provided for a period of one year from date of Substantial Completion and shall include the following:

1. Initial water analysis and HVAC water-treatment recommendations.
2. Startup assistance for Contractor to flush the systems, clean with detergents, and initially fill systems with required chemical treatment prior to operation.
3. Periodic field service and consultation.
4. Customer report charts and log sheets.
5. Laboratory technical analysis.
6. Analyses and reports of all chemical items concerning safety and compliance with government regulations.

1.9 EXTRA MATERIALS

A. Furnish extra materials described below that match products installed and that are packaged with protective covering for storage and identified with labels describing contents.

1. Chemicals: Furnish quantity equal to 100 percent of amount initially installed.

SECTION 232513 - WATER TREATMENT FOR CLOSED-LOOP HYDRONIC SYSTEMS

PART 2 - PRODUCTS

2.1 MANUFACTURERS

A. Manufacturers: Subject to compliance with requirements, provide products by one of the following:
   1. Garrett Callahan
   2. Nalco
   3. Kurita
   4. All other companies shall request pre-qualification approval from Owner and Engineer.

2.2 PERFORMANCE REQUIREMENTS

A. Water quality for hydronic systems shall minimize corrosion, scale buildup, and biological growth for optimum efficiency of hydronic equipment without creating a hazard to operating personnel or the environment.

B. Base HVAC water treatment on quality of water available at Project site, hydronic system equipment material characteristics and functional performance characteristics, operating personnel capabilities, and requirements and guidelines of authorities having jurisdiction.

C. Closed hydronic systems, including chilled water, shall have the following water qualities:
   1. Meet state and local pollution standards, codes and regulations.
   2. pH: Maintain a value within 9.0 to 10.5.
   3. TSS: Maintain a maximum value of 10 ppm.
   4. Hardness: 0.0
   5. Iron: 0.0
   6. TDS: 1500 to 1700 PPM (as CaCO3)
   7. Silica: 60 PPM or less
   8. Copper: Per manufacturer's recommendations.
   9. Total Algae: 0.00 growth.
   10. Provide liquid biocide during initial fill.
   11. Microbiological Limits:
      a. Total Aerobic Plate Count: Maintain a maximum value of 1000 organisms/mL.
      b. Total Anaerobic Plate Count: Maintain a maximum value of 100 organisms/mL.
      c. Nitrate Reducers: Maintain a maximum value of 100 organisms/mL.
      d. Sulfate Reducers: Maintain a maximum value of zero organisms/mL.
      e. Iron Bacteria: Maintain a maximum value of zero organisms/mL.

2.3 MANUAL CHEMICAL-FEED EQUIPMENT

A. Bypass Feeders: Steel, with corrosion-resistant exterior coating, minimum 3-1/2-inch fill opening in the top, and NPS 3/4 bottom inlet and top side outlet. Quarter turn or threaded fill cap with gasket seal and diaphragm to lock the top on the feeder when exposed to system pressure in the vessel.
   1. Capacity: 5 gal..

2. Minimum Working Pressure: 175 psig.

B. Water Meter:

1. AWWA C701, turbine-type, totalization meter.
2. Body: Bronze.
3. Minimum Working-Pressure Rating: 100 psig.
4. Maximum Pressure Loss at Design Flow: 3 psig.
5. Registration: Gallons or cubic feet.
6. End Connections: Threaded.
7. Control: Low-voltage signal capable of transmitting 1000 feet.
8. Electrical Components, Devices, and Accessories: Listed and labeled as defined in NFPA 70, by a qualified testing agency, and marked for intended location and application.

2.4 CHEMICALS

A. Chemicals shall be as recommended by water-treatment system manufacturer that are compatible with piping system components and connected equipment and that can attain water quality specified in "Performance Requirements" Article.

B. System Cleaner: Liquid alkaline compound with emulsifying agents and detergents to remove grease and petroleum products.

C. Biocide: Chlorine release agents or microbiocides.

D. Closed-Loop, Water Piping Chemicals: Sequestering agent to reduce deposits and adjust pH, corrosion inhibitors, and conductivity enhancers.

2.5 FILTRATION UNIT

A. Filtration Unit: Stainless-steel housing and polypropylene filter with polypropylene core.

B. Replaceable Filter Media: Compatible with antifreeze and water-treatment chemicals.

C. Filter Media for Sediment Removal Service: Rated at 98 percent efficiency for 20-micrometer particulate.

PART 3 - EXECUTION

3.1 WATER ANALYSIS

A. Perform an analysis of supply water to determine quality of water available at Project site.

3.2 INSTALLATION

A. Install chemical application equipment on concrete bases, level and plumb. Maintain manufacturer's recommended clearances. Arrange units so controls and devices that require servicing are accessible. Anchor chemical tanks and floor-mounting accessories to substrate.

B. Install water testing equipment on wall near water chemical application equipment.

C. Bypass Feeders: Install in closed hydronic systems, including chilled water, and equipped with the following:

1. Install bypass feeder in a bypass circuit around circulating pumps unless otherwise indicated on Drawings.
2. Install water meter in makeup-water supply.
3. Install test-coupon assembly in bypass circuit around circulating pumps unless otherwise indicated on Drawings.
4. Install a gate or full-port ball isolation valves on inlet, outlet, and drain below the feeder inlet.
5. Install a swing check on the inlet after the isolation valve.

3.3 CONNECTIONS

A. Where installing piping adjacent to equipment, allow space for service and maintenance.

B. Make piping connections between HVAC water-treatment equipment and dissimilar-metal piping with dielectric fittings. Comply with requirements in Section 232116 "Hydronic Piping Specialties."

C. Install shutoff valves on HVAC water-treatment equipment inlet and outlet. Metal general-duty valves are specified in Division 23 Sections.

D. Comply with requirements in Section 221119 "Domestic Water Piping Specialties" for backflow preventers required in makeup-water connections to potable-water systems.

E. Confirm applicable electrical requirements in electrical Sections for connecting electrical equipment.

F. Ground equipment according to Section 260526 "Grounding and Bonding for Electrical Systems."

G. Connect wiring according to Section 260519 "Low-Voltage Electrical Power Conductors and Cables."

3.4 FIELD QUALITY CONTROL

A. Manufacturer's Field Service: Engage a factory-authorized service representative to test and inspect components, assemblies, and equipment installations, including connections.

1. Inspect field-assembled components and equipment installation, including piping and electrical connections.
2. Inspect piping and equipment to determine that systems and equipment have been cleaned, flushed, and filled with water, and are fully operational before introducing chemicals for water-treatment system.
3. Place HVAC water-treatment system into operation and calibrate controls during the preliminary phase of hydronic systems' startup procedures.
4. Do not enclose, cover, or put piping into operation until it is tested and satisfactory test results are achieved.
5. Test for leaks and defects. If testing is performed in segments, submit separate report for each test, complete with diagram of portion of piping tested.
6. Leave uncovered and unconcealed new, altered, extended, and replaced water piping until it has been tested and approved. Expose work that has been covered or concealed before it has been tested and approved.
7. Cap and subject piping to static water pressure of 50 psig above operating pressure, without exceeding pressure rating of piping system materials. Isolate test source and allow test pressure to stand for four hours. Leaks and loss in test pressure constitute defects.
8. Repair leaks and defects with new materials and retest piping until no leaks exist.

B. Equipment will be considered defective if it does not pass tests and inspections.

C. Prepare test and inspection reports.

D. At eight-week interval following Substantial Completion, perform separate water analyses on hydronic systems to show that chemical-feed systems are maintaining water quality within performance requirements specified in this Section. Submit written reports of water analysis advising Owner of changes necessary to adhere to "Performance Requirements" Article.

E. Comply with ASTM D 3370 and with the following standards:
1. Silica: ASTM D 859.
2. Acidity and Alkalinity: ASTM D 1067.
3. Iron: ASTM D 1068.
4. Water Hardness: ASTM D 1126.

3.5 ADJUSTING

A. Occupancy Adjustments: Within 12 months of Substantial Completion, perform two separate water analyses to prove that systems are maintaining water quality within performance requirements specified in this Section. Perform analyses at least 60 days apart. Submit written reports of water analysis.

3.6 DEMONSTRATION

A. Engage a factory-authorized service representative to train Owner's maintenance personnel to adjust, operate, and maintain HVAC water-treatment systems and equipment.

END OF SECTION 232513

SECTION 232923 - VARIABLE FREQUENCY MOTOR CONTROLLERS

PART 1 - GENERAL

1.1 RELATED DOCUMENTS

A. Drawings and general provisions of the Contract, including General and Supplementary Conditions and Division 01 Specification Sections, apply to this Section.

1.2 SUMMARY

A. This Section includes solid-state, PWM, VFDs for speed control of three-phase, squirrel-cage induction motors.

B. Related Sections include the following:
1. Division 26 Section "Electrical Power Monitoring and Control" for monitoring and control of motor circuits.
2. Division 26 Section "Transient Voltage Suppression" for low-voltage power, control, and communication surge suppressors.

1.3 DEFINITIONS

A. BAS: Building Automation System.

B. IGBT: Integrated gate bipolar transistor.

C. LAN: Local area network.

D. PID: Control action, proportional plus integral plus derivative.

E. PWM: Pulse-width modulated.

F. VFD: Variable frequency drive.

1.4 REFERENCES

A. ANSI/NEMA ICS 6 – Enclosures for industrial control systems.

B. ANSI/UL 198C – High intensity capacity fuses; current limiting types.

C. NEMA ICS 2 – Industrial control devices, controllers, and assemblies.

D. NEMA KS 1 – Enclosed switches.

E. NEMA PB 1.1 – Instructions for safe installation, operation, and maintenance of panelboards rated 600 volts or less.

1.5 SUBMITTALS

A. Product Data: For each type of VFD, provide dimensions; mounting arrangements; location for conduit entries; shipping and operating weights; and manufacturer's technical data on features, performance, electrical ratings, characteristics, and finishes.

B. Shop Drawings: For each VFD.
   1. Include dimensioned plans, elevations, sections, and details, including required clearances and service space around equipment. Show tabulations of installed devices, equipment features, and ratings. Include the following:
      a. Each installed unit's type and details.
      b. Nameplate legends.
      c. Short-circuit current ratings of integrated unit.

   2. Wiring Diagrams: Power, signal, and control wiring for VFD. Provide schematic wiring diagram for each type of VFD.

C. Manufacturer's field service report.

D. Operation and Maintenance Data: For VFDs, all installed devices, and components to include in emergency, operation, and maintenance manuals. Include routine maintenance requirements for VFDs and all installed components

1.6 QUALITY ASSURANCE

A. Source Limitations: Obtain VFDs of a single type through one source from a single manufacturer.

B. Electrical Components, Devices, and Accessories: Listed and labeled as defined in NFPA 70, Article 100, by a testing agency acceptable to authorities having jurisdiction, and marked for intended use.

C. Product Selection for Restricted Space: Drawings indicate maximum dimensions for VFDs, minimum clearances between VFDs, and adjacent surfaces and other items. Comply with indicated dimensions and clearances.

D. Comply with NFPA 70.

E. UL listed drive and UL-508 listed bypass/inverter assembly.

1.7 WARRANTY

A. Written warranty, signed by manufacturer. Manufacturer's standard form in which manufacturer agrees to replace components of units that fail in materials or workmanship within specified warranty period. Manufacturer will provide all labor required for replacement of materials, equipment, controls, and any other portion of complete assembly, as required. A factory-trained employee of manufacturer shall perform warranty work.
   1. Warranty Period for VFD's: Manufacturer's standard, but not less than three years from date of Substantial Completion.

2. Warranty period will commence from the date of manufacturer's startup.

B. For the duration of the warranty, local manufacturer's representative must provide a response time of no more than 24 hours. Any failed VFD must be put back into automatic operation within this time period. Mere acknowledgement of a problem does not constitute an acceptable response.

1.8 SPARE PARTS

A. Spare Fuses: Furnish three spare fuses for each type and rating installed.

PART 2 - PRODUCTS

2.1 MANUFACTURERS

A. Manufacturers: Subject to compliance with requirements, provide products by one of the following:
1. ABB
2. Danfoss.
3. Yaskawa.
4. Other manufacturers may be accepted only with prior approval of Engineer, and only if they meet all requirements of this specification. Provide request for substitution a minimum of 7 days prior to submission of bid.

B. Specific models proposed must have a continuous and proven track record of no less than 3 years.

2.2 VARIABLE FREQUENCY DRIVES

A. Description: NEMA ICS 2, IGBT, PWM, VFD; listed and labeled as a complete unit and arranged to provide variable speed of a NEMA MG 1, Design B, 3-phase, premium-efficiency induction motor by adjusting output voltage and frequency.

B. Design and Rating: Match load type such as fans, blowers, and pumps; and type of connection used between motor and load such as direct or through a power-transmission connection.

C. Output Rating: 3-phase; 6 to 60 Hz, with voltage proportional to frequency throughout voltage range.

D. Unit Operating Requirements:

1. Input ac voltage tolerance of 380 to 480 V, plus or minus 10 percent.
2. Input frequency tolerance of 60 Hz, plus or minus 6 percent.
3. Capable of driving full load, under the following conditions, without derating:

a. Ambient Temperature: 0 to 40 deg C.
b. Humidity: Less than 90 percent (non-condensing).
c. Altitude: 3300 feet (1000 m).

4. Minimum Efficiency: 96 percent at 60 Hz, full load.
5. Minimum Displacement Primary-Side Power Factor: 97 percent.
6. Overload Capability: 1.10 times the base load current for 60 seconds at 40°C; 2.0 times the base load current for 3 seconds at 40°C.
7. Starting Torque: 100 percent of rated torque or as indicated.
8. Speed Regulation: Plus or minus 1 percent.
9. Isolated control interface to allow controller to follow control signal over an 11:1 speed range.
10. Continuous output current rating shall be no less than 100% of NEC motor amperage ratings.
11. Overload current capability of power cube at 40°C shall equal or exceed 200% of NEC motor amperage values for instantaneous trip, and 110% of NEC amperage for a minimum of sixty seconds, without damage to power cube.
12. Minimum 5% input impedance line reactor; comply with EN61000-3-2, or minimum 3% DC link reactor (also called inductive choke) connected to the DC bus between the rectifier and the PWM inverter.

E. Power Quality Issues

1. VFD must be capable of operating satisfactorily when connected to a bus supplying other solid state power conversion equipment which may be causing up to 10% total harmonic distortion and commutation notches up to 36,500 volt-microseconds, and when other VFDs are operating from the same bus.
2. VFD shall generate less than 3% total harmonic distortion back to the incoming power line at the point of common connection with sensitive equipment. A harmonic analysis shall be submitted with the approval drawings to verify compliance with the latest version of IEEE-519 voltage and current distortion limits as shown in table 10.2 and 10.3 at the point of common coupling (the consumer–utility interface or primary side of the main distribution transformer).
3. The system shall not produce spikes on the incoming line.
4. Any inverter that generates sufficient electrical line noise to interfere with the operation of sensitive building equipment shall be field modified or replaced by the inverter supplier at no additional cost to the Owner.
5. Provide input line noise suppression with MOV's (metal oxide varistors) and snubber circuits to allow for operation on typical industrial or commercial power distribution systems. MOV's shall be provided across incoming line terminals and transistors to protect inverter from voltage surges and spikes.
6. The VFD shall not induce excessive power losses in motors. The worst case RMS motor line current measured at rated speed, torque, and voltage shall not exceed 1.05 times the rated RMS current for pure sine wave operation.
7. VFD must be capable of operating a motor satisfactorily with up to 300 feet of wiring between VFD and motor.

F. Diodes: Bridge rated for 1600 volts.

G. Internal Adjustability Capabilities:

1. Minimum Speed: 5 to 25 percent of maximum rpm.
2. Maximum Speed: 80 to 100 percent of maximum rpm.
3. Acceleration: 2 to a minimum of 22 seconds.
4. Deceleration: 2 to a minimum of 22 seconds.

5. Current Limit: 50 to a minimum of 110 percent of maximum rating.

H. Self-Protection and Reliability Features:

1. Input transient protection by means of surge suppressors.
2. Snubber networks to protect against malfunction due to system voltage transients.
3. Under- and overvoltage trips; inverter overtemperature, overload, and overcurrent trips.
4. Motor Overload Relay: Adjustable and capable of NEMA 250, Class 20 performance.
5. Notch filter to prevent operation of the controller-motor-load combination at a natural frequency of the combination.
6. Instantaneous line-to-line and line-to-ground overcurrent trips.
7. Loss-of-phase protection.
8. Reverse-phase protection.
9. Short-circuit protection.
10. Motor overload.
11. Motor over-temperature fault.
12. Heat sink over temperature (Max. operating ambient: 104 degrees F)
13. Protect solid state inverter devices by limiting output current to 110% of inverter rating, automatically prevent over-current trip due to momentary overload conditions.

I. Automatic Reset and Restart: To attempt three restarts after controller fault or on return of power after an interruption and before shutting down for manual reset or fault correction. Bidirectional auto-speed search shall be capable of starting into rotating loads spinning in either direction and returning motor to set speed in proper direction, without damage to controller, motor, or load.

J. Power-Interruption Protection: To prevent motor from re-energizing after a power interruption until motor has stopped.

K. Torque Boost: Automatically vary starting and continuous torque to at least 1.5 times the minimum torque to insure high-starting torque and increased torque at slow speeds.

L. Motor Temperature Compensation at Slow Speeds: Adjustable current fall-back based on output frequency for temperature protection of self-cooled fan-ventilated motors at slow speeds.

M. Status Lights: Door-mounted LED indicators shall indicate the following conditions:

1. Power on.
2. Run.
3. Overvoltage.
4. Line fault.
5. Overcurrent.
6. External fault.

N. Panel-Mounted Operator Station: Start-stop and auto-manual selector switches with manual speed control potentiometer and elapsed time meter.

O. Indicating Devices: Meters or digital readout devices and selector switch, mounted flush in controller door and connected to indicate the following controller parameters:

1. Output frequency (Hz).

2. Motor speed (rpm).
3. Motor status (running, stop, fault).
4. Motor current (amperes).
5. Motor torque (percent).
6. Fault or alarming status (code).
7. PID feedback signal (percent).
8. DC-link voltage (VDC).
9. Set-point frequency (Hz).
10. Motor output voltage (V).

P. Control Signal Interface: Provide VFD with the following:

1. Provide communications devices as necessary to allow for connectivity to major automation systems.

2. VFD shall be provided with protocol information specific to Owner's BAS control manufacturer and shall be pre-configured at the factory to provide automatic communications, without the need for field programming, via a single twisted pair wire.

   a. The VFD shall allow the DDC system to control the drive's digital and analog outputs and monitor all drive digital and analog inputs via the serial interface.
   b. VFD is to support BACNet, LonWorks, and Modbus RTU.
   c. Serial communications capabilities include, but are not limited to: run/stop control, speed set adjustment, proportional/integral or PID control adjustments, current limit and acceleration/deceleration time adjustments. The drive shall also have the capability of allowing the DDC system to monitor the following feedback signals: process variable, output speed/frequency, current, torque, power (KW), operating hours, kilowatt hours; relay outputs, and diagnostic warning and fault information.

3. Remote Signal Inputs: Capability to accept any of the following speed-setting input signals from the BMS or other control systems:
   a. 0 to 10-V dc.
   b. 0-20 or 4-20 mA.
   c. Potentiometer using up/down digital inputs.
   d. Fixed frequencies using digital inputs.
   e. RS485.
   f. Keypad display for local hand operation.

4. Remote Indication Interface: A minimum of 2 dry circuit relay outputs (120-V ac, 1 A) for remote indication of the following:
   a. Motor running.
   b. Set-point speed reached.
   c. Fault and warning indication (over-temperature or over-current).
   d. PID high or low speed limits reached.

Q. Manual Bypass: Arrange magnetic contactor to safely transfer motor between controller output and bypass controller circuit when motor is at zero speed. Controller-off-bypass selector switch sets mode, and indicator lights give indication of mode selected. Unit shall be capable of stable operation (starting, stopping, and running), with motor completely disconnected from controller (no load).

R. Isolating Switch: Non-load-break switch arranged to isolate VFD and permit safe troubleshooting and testing, both energized and de-energized, while motor is operating in bypass mode.

S. Bypass Controller:
1. NEMA ICS 2, full-voltage, non-reversing enclosed controller with across-the-line starting capability in manual-bypass mode. Provide motor overload protection under both modes of operation with control logic that allows common start-stop capability in either mode.
2. Bypass section is to be located in a metal enclosure separate from the drive section, and shall be constructed in such a manner that the inverter can be removed for repair while still operating the motor in the "bypass" mode without exposing personnel to any electrical voltage. VFD shall have inverter input power disconnect with door interlocked handle (lock out type) arranged to isolate VFD and permit safe troubleshooting & testing of inverter in when energized and/or de-energized, while motor is operating in bypass mode.
3. Manual bypass shall contain:
   a. A molded case circuit breaker or non-fused disconnect switch with door interlocked handle (lock out type) that interrupts input power to both the bypass circuitry and the drive.
   b. A thermal overload to provide protection of motor in the bypass mode.
   c. A safety interlock circuit that disconnects power to the motor (regardless of the mode of operation—"inverter" or "bypass") in response to a signal from the thermal overload and/or external safety circuits.
   d. Line voltage to 120/1 volt transformers, fused per NEC, to provide power to bypass control circuits. Transformer shall be sized to include additional 20VA capacity for use by EMS contractor. DC and/or solid-state bypass sources are not acceptable.

T. Non-fused input disconnect switch.

U. Where indicated, provide accessories for "Contactor Motor Selection with Bypass" that will allow the DDC system to remotely switch lead-lag motors.

2.3 ENCLOSURES

A. NEMA 3R for any VFD located outdoors.

B. NEMA 12, for all other VFDs located in unconditioned space (indoors).

C. NEMA 1, for all other VFDs located in conditioned space (indoors).

D. Metal inverter enclosure. Plastic and/or fiberglass enclosures are not acceptable.

2.4 FACTORY FINISHES

A. Finish: Manufacturer's standard paint applied to factory-assembled and -tested VFDs before shipping.

PART 3 - EXECUTION

3.1 EXAMINATION

A. Examine areas, surfaces, and substrates to receive VFDs for compliance with requirements, installation tolerances, and other conditions affecting performance.

B. Examine roughing-in for conduit systems to verify actual locations of conduit connections before VFD installation.

C. Proceed with installation only after unsatisfactory conditions have been corrected.

3.2 APPLICATIONS

A. Select features of each VFD to coordinate with ratings and characteristics of supply circuit and motor; required control sequence; and duty cycle of motor, drive, and load.

B. Select rating of controllers to suit motor controlled.

3.3 INSTALLATION

A. Anchor each VFD assembly to steel-channel sills arranged and sized according to manufacturer's written instructions. Attach by bolting. Level and grout sills flush with VFD mounting surface.

B. Controller Fuses: Install fuses in each fusible switch. Comply with requirements in Division 16 Section "Fuses."

C. Do not install incoming AC lines in same conduit as feeder lines to motor.

D. Do not install wiring runs between VFD and motor longer than recommended by manufacturer.

3.4 IDENTIFICATION

A. Identify VFDs, components, and control wiring according to Division 16 Section "Basic Electrical Materials and Methods"

3.5 CONNECTIONS

A. Ground equipment.

B. Tighten electrical connectors and terminals according to manufacturer's published torque-tightening values. If manufacturer's torque values are not indicated, use those specified in UL 486A and UL 486B.

3.6 FIELD QUALITY CONTROL

A. Prepare for acceptance tests as follows:
   1. Test insulation resistance for each VFD element, bus, component, connecting supply, feeder, and control circuit.
   2. Test continuity of each circuit.

B. Testing: Perform the following field quality-control testing:
   1. Perform each electrical test and visual and mechanical inspection stated in NETA ATS, Sections 7.5, 7.6, and 7.16. Certify compliance with test parameters.
   2. Correct malfunctioning units on-site, where possible, and retest to demonstrate compliance; otherwise, replace with new units and retest.

C. Test Reports: Prepare a written report to record the following:
   1. Test procedures used.
   2. Test results that comply with requirements.
   3. Test results that do not comply with requirements and corrective action taken to achieve compliance with requirements.

3.7 STARTUP SERVICE

A. Engage a factory-authorized service representative to inspect field-assembled components and equipment installation, including pretesting and adjusting VFDs, and perform startup service.

B. Verify that electrical wiring installation complies with manufacturer's submittal and installation requirements in Division 16 Sections.

C. Complete installation and startup checks according to manufacturer's written instructions.

D. Upon successful completion of testing, submit written certification that drives are operating in accordance with Contract Documents, and within design operating limits of equipment. Notify Owner; include set points of adjustable devices, amperages recorded, and any other pertinent data. This information is to be included in the operation and maintenance manual.

3.8 ADJUSTING

A. Set field-adjustable switches and circuit-breaker trip ranges.

3.9 CLEANING

A. Clean VFDs internally, on completion of installation, according to manufacturer's written instructions. Vacuum dirt and debris; do not use compressed air to assist in cleaning.

3.10 DEMONSTRATION

A. Provide services of manufacturer trained employee(s) for minimum of three hours training. Demonstrate operation of controllers in the automatic, manual, and bypass modes.

END OF SECTION 23 29 23

SECTION 233113 - METAL DUCTS

PART 1 - GENERAL

1.1 RELATED DOCUMENTS

A. Drawings and general provisions of the Contract, including General and Supplementary Conditions and Division 01 Specification Sections, apply to this Section.

1.2 SUMMARY

A. Section Includes:
   1. Single-wall rectangular ducts and fittings.
   2. Single-wall, spiral-seam, round ducts and fittings.
   3. Double-wall, round and flat-oval spiral-seam ducts and formed fittings.
   4. Sheet metal materials.
   5. Duct liner.
   6. Sealants and gaskets.
   7. Hangers and supports.

B. Related Sections:
   1. Section 230593 "Testing, Adjusting, and Balancing for HVAC" for testing, adjusting, and balancing requirements for metal ducts.
   2. Section 233300 "Air Duct Accessories" for dampers, sound-control devices, duct-mounting access doors and panels, turning vanes, and flexible ducts.

1.3 PERFORMANCE REQUIREMENTS

A. Delegated Duct Design: Duct construction, including sheet metal thicknesses, seam and joint construction, reinforcements, and hangers and supports, shall comply with SMACNA's "HVAC Duct Construction Standards - Metal and Flexible" and performance requirements and design criteria indicated in "Duct Schedule" Article.

B. Structural Performance: Duct hangers and supports shall withstand the effects of gravity loads and stresses within limits and under conditions described in SMACNA's "HVAC Duct Construction Standards - Metal and Flexible"

C. Airstream Surfaces: Surfaces in contact with the airstream shall comply with requirements in ASHRAE 62.1.

D. Duct system design, as indicated, has been used to select size and type of air-moving and -distribution equipment and other air system components. Changes to layout or configuration of duct system must be specifically approved in writing by Engineer. Accompany requests for layout modifications with calculations showing that proposed layout will provide original design results without increasing system total pressure.

1.4 ACTION SUBMITTALS

A. Product Data: For each type of the following products:
   1. Liners and adhesives.
   2. Sealants and gaskets.
   3. Fire-Stopping Materials.

B. Shop Drawings:
   1. Fabrication, assembly, and installation, including plans, elevations, sections, components, and attachments to other work.
   2. Factory- and shop-fabricated ducts and fittings.
   3. Duct layout indicating sizes, configuration, liner material, and static-pressure classes.
   4. Elevation of top of ducts.
   5. Dimensions of main duct runs from building grid lines.
   6. Fittings.
   7. Reinforcement and spacing.
   8. Seam and joint construction.
   9. Penetrations through fire-rated and other partitions.
   10. Equipment installation based on equipment being used on Project.
   11. Locations for duct accessories, including dampers, turning vanes, and access doors and panels.
   12. Hangers and supports, including methods for duct and building attachment and vibration isolation.

C. Delegated-Design Submittal:
   1. Sheet metal thicknesses.
   2. Joint and seam construction and sealing.
   3. Reinforcement details and spacing.
   4. Materials, fabrication, assembly, and spacing of hangers and supports.

1.5 INFORMATIONAL SUBMITTALS

A. Coordination Drawings: Plans, drawn to scale, on which the following items are shown and coordinated with each other, using input from installers of the items involved:
   1. Duct installation in congested spaces, indicating coordination with general construction, building components, and other building services. Indicate proposed changes to duct layout.
   2. Suspended ceiling components.
   3. Structural members to which duct will be attached.
   4. Size and location of initial access modules for acoustical tile.
   5. Penetrations of smoke barriers and fire-rated construction.
   6. Items penetrating finished ceiling including the following:
      a. Lighting fixtures.
      b. Air outlets and inlets.
      c. Speakers.
      d. Sprinklers.
      e. Access panels.
      f. Perimeter moldings.

B. Welding certificates.

C. Field quality-control reports.

1.6 QUALITY ASSURANCE

A. Welding Qualifications: Qualify procedures and personnel according to AWS D1.1/D1.1M, "Structural Welding Code - Steel," for hangers and supports. AWS D9.1M/D9.1, "Sheet Metal Welding Code," for duct joint and seam welding.

B. Welding Qualifications: Qualify procedures and personnel according to the following:
   1. AWS D1.1/D1.1M, "Structural Welding Code - Steel," for hangers and supports.
   2. AWS D9.1M/D9.1, "Sheet Metal Welding Code," for duct joint and seam welding.

C. ASHRAE Compliance: Applicable requirements in ASHRAE 62.1, Section 5 - "Systems and Equipment" and Section 7 - "Construction and System Start-up."

D. ASHRAE/IESNA Compliance: Applicable requirements in ASHRAE/IESNA 90.1, Section 6.4.4 - "HVAC System Construction and Insulation."

PART 2 - PRODUCTS

2.1 SINGLE-WALL RECTANGULAR DUCTS AND FITTINGS

A. General Fabrication Requirements: Comply with SMACNA's "HVAC Duct Construction Standards - Metal and Flexible" based on indicated static-pressure class unless otherwise indicated.

B. Transverse Joints: Select joint types and fabricate according to SMACNA's "HVAC Duct Construction Standards - Metal and Flexible," Figure 2-1, "Rectangular Duct/Transverse Joints," for static-pressure class, applicable sealing requirements, materials involved, duct-support intervals, and other provisions in SMACNA's "HVAC Duct Construction Standards - Metal and Flexible."

C. Longitudinal Seams: Select seam types and fabricate according to SMACNA's "HVAC Duct Construction Standards - Metal and Flexible," Figure 2-2, "Rectangular Duct/Longitudinal Seams," for static-pressure class, applicable sealing requirements, materials involved, duct-support intervals, and other provisions in SMACNA's "HVAC Duct Construction Standards - Metal and Flexible."

D. Elbows, Transitions, Offsets, Branch Connections, and Other Duct Construction: Select types and fabricate according to SMACNA's "HVAC Duct Construction Standards - Metal and Flexible," Chapter 4, "Fittings and Other Construction," for static-pressure class, applicable sealing requirements, materials involved, duct-support intervals, and other provisions in SMACNA's "HVAC Duct Construction Standards - Metal and Flexible."

2.2 SINGLE-WALL ROUND DUCTS AND FITTINGS

A. Round, Spiral Lock-Seam Ducts.

B. General Fabrication Requirements: Comply with SMACNA's "HVAC Duct Construction Standards - Metal and Flexible," Chapter 3, "Round, Oval, and Flexible Duct," based on indicated static-pressure class unless otherwise indicated.
   1. Manufacturers:
      a. Lindab Inc.
      b. McGill AirFlow LLC.
      c. SEMCO Incorporated.
      d. Sheet Metal Connectors, Inc.
      e. Spiral Manufacturing Co., Inc.

C. Flat-Oval Ducts: Indicated dimensions are the duct width (major dimension) and diameter of the round sides connecting the flat portions of the duct (minor dimension).

D. Duct Joints:
   1. Ducts up to 20 Inches in Diameter: Interior, center-beaded slip coupling, sealed before and after fastening, attached with sheet metal screws.
   2. Ducts 21 to 72 Inchesin Diameter: Three-piece, gasketed, flanged joint consisting of two internal flanges with sealant and one external closure band with gasket.
   3. Round Ducts: Prefabricated connection system consisting of double-lipped, EPDM rubber gasket. Manufacture ducts according to connection system manufacturer's tolerances.
      a. Manufacturers:
         1) Ductmate Industries, Inc.
         2) Lindab Inc.

E. 90-Degree Tees and Laterals and Conical Tees: Fabricate to comply with SMACNA's "HVAC Duct Construction Standards--Metal and Flexible," with metal thicknesses specified for longitudinal-seam straight ducts.

F. Diverging-Flow Fittings: Fabricate with reduced entrance to branch taps and with no excess material projecting from fitting onto branch tap entrance.

G. Fabricate elbows using die-formed, gored, pleated, or mitered construction. Unless elbow construction type is indicated, fabricate elbows as follows:
   1. Mitered-Elbow Radius and Number of Pieces: Welded construction complying with SMACNA's "HVAC Duct Construction Standards--Metal and Flexible," unless otherwise indicated.
   2. Round Mitered Elbows with Aerofoil Vanes: Welded construction with the following metal thickness for pressure classes from minus 2- to plus 2-inch wg:
      a. Ducts 3 to 36 Inches in Diameter: 0.034 inch.
      b. Ducts 37 to 50 Inches in Diameter: 0.040 inch.

   3. 90-Degree, 2-Piece, Mitered Elbows: Use only for supply systems or for material-handling Class A or B exhaust systems and only where space restrictions do not permit using radius elbows. Fabricate with single-thickness turning vanes.
   4. Round Elbows 8 Inchesand Less in Diameter: Fabricate die-formed elbows for 45- and 90-degree elbows and pleated elbows for 30, 45, 60, and 90 degrees only. Fabricate nonstandard bend-angle configurations or nonstandard diameter elbows with gored construction.
   5. Round Elbows 9 through 14 Inchesin Diameter: Fabricate gored or pleated elbows for 30, 45, 60, and 90 degrees unless space restrictions require mitered elbows. Fabricate

nonstandard bend-angle configurations or nonstandard diameter elbows with gored construction.

6. Round Elbows Larger than 14 Inches in Diameter and All Flat-Oval Elbows: Fabricate gored elbows unless space restrictions require mitered elbows.
7. Die-Formed Elbows for Sizes through 8 Inches in Diameter and All Pressures 0.040 inch thick with 2-piece welded construction.
8. Round Gored-Elbow Metal Thickness: Same as non-elbow fittings specified above.
9. Pleated Elbows for Sizes through 14 Inches in Diameter and Pressures through 10-Inch wg: 0.022 inch.

2.3 DOUBLE-WALL ROUND AND FLAT-OVAL DUCTS AND FITTINGS

A. Manufacturers: Subject to compliance with requirements, provide products by one of the following:
1. Lindab Inc.
2. McGill AirFlow LLC.
3. SEMCO Incorporated.

B. Ducts: Prefabricated double-wall (insulated) ducts with an outer shell and an inner duct. Dimensions indicated are for inner ducts.

C. Flat-Oval Ducts: Indicated dimensions are the duct width (major dimension) and diameter of the round sides connecting the flat portions of the duct (minor dimension) of the inner duct.

D. Outer Duct: Comply with SMACNA's "HVAC Duct Construction Standards - Metal and Flexible," Chapter 3, "Round, Oval, and Flexible Duct," based on static-pressure class unless otherwise indicated.
1. Transverse Joints: Select joint types and fabricate according to SMACNA's "HVAC Duct Construction Standards - Metal and Flexible," Figure 3-1, "Round Duct Transverse Joints," for static-pressure class, applicable sealing requirements, materials involved, duct-support intervals, and other provisions in SMACNA's "HVAC Duct Construction Standards - Metal and Flexible."
   a. Transverse Joints in Ducts Larger Than 60 Inches in Diameter: Flanged.
2. Longitudinal Seams: Select seam types and fabricate according to SMACNA's "HVAC Duct Construction Standards - Metal and Flexible," Figure 3-2, "Round Duct Longitudinal Seams," for static-pressure class, applicable sealing requirements, materials involved, duct-support intervals, and other provisions in SMACNA's "HVAC Duct Construction Standards - Metal and Flexible."
3. Tees and Laterals: Select types and fabricate according to SMACNA's "HVAC Duct Construction Standards - Metal and Flexible," Figure 3-5, "90 Degree Tees and Laterals," and Figure 3-6, "Conical Tees," for static-pressure class, applicable sealing requirements, materials involved, duct-support intervals, and other provisions in SMACNA's "HVAC Duct Construction Standards - Metal and Flexible."

E. Inner Duct: Minimum 0.028-inch solid sheet steel.

F. Fittings: Fabricate double-wall (insulated) fittings with an outer shell and an inner duct.
1. Solid Inner Ducts: Use the following sheet metal thicknesses:

a. Ducts 3 to 34 Inches in Diameter: 0.028 inch.
b. Ducts 35 to 58 Inches in Diameter: 0.034 inch.
c. Ducts 60 to 88 Inches in Diameter: 0.040 inch.

G. Interstitial Insulation: Fibrous-glass liner complying with ASTM C 1071, NFPA 90A, or NFPA 90B; and with NAIMA AH124, "Fibrous Glass Duct Liner Standard."
1. Maximum Thermal Conductivity: 0.26 Btu x in./h x sq. ft. x deg F at 75 deg F mean temperature.
2. Install spacers that position the inner duct at uniform distance from outer duct without compressing insulation.
3. Terminate insulation where double-wall duct connects to single-wall externally insulated duct, and reduce outer shell diameter to inner duct diameter.
4. Coat insulation with antimicrobial coating.
5. Cover insulation with polyester film complying with UL 181, Class 1.
6. Supply and Make-Up Air Ducts: **2 inches** thick.
7. **Painted for indoor application.** Coordinate final finish with architect.

2.4 SHEET METAL MATERIALS

A. General Material Requirements: Comply with SMACNA's "HVAC Duct Construction Standards - Metal and Flexible" for acceptable materials, material thicknesses, and duct construction methods unless otherwise indicated. Sheet metal materials shall be free of pitting, seam marks, roller marks, stains, discolorations, and other imperfections.

B. Galvanized Sheet Steel: Comply with ASTM A 653/A 653M.
1. Galvanized Coating Designation: G90.
2. Finishes for Surfaces Exposed to View: Mill phosphatized.

C. Carbon-Steel Sheets: Comply with ASTM A 1008/A 1008M, with oiled, matte finish for exposed ducts.

D. Stainless-Steel Sheets: Comply with ASTM A 480/A 480M, Type 304 or 316, as indicated in the "Duct Schedule" Article; cold rolled, annealed, sheet. Exposed surface finish shall be No. 2B, No. 2D, No. 3, or No. 4 as indicated in the "Duct Schedule" Article.

E. Reinforcement Shapes and Plates: ASTM A 36/A 36M, steel plates, shapes, and bars; black and galvanized.
1. Where black- and galvanized-steel shapes and plates are used to reinforce aluminum ducts, isolate the different metals with butyl rubber, neoprene, or EPDM gasket materials.

F. Tie Rods: Galvanized steel, 1/4-inch minimum diameter for lengths 36 inches or less; 3/8-inch minimum diameter for lengths longer than 36 inches.

2.5 DUCT LINER

A. Fibrous-Glass Duct Liner: Comply with ASTM C 1071, NFPA 90A, or NFPA 90B; and with NAIMA AH124, "Fibrous Glass Duct Liner Standard."
1. Manufacturers:
a. Owens Corning's Aeroflex Plus Duct Liner or Equal.

2. Materials: ASTM C 1071; surfaces exposed to airstream shall be coated to prevent erosion of glass fibers.
   a. Maximum Thermal Conductivity:
   b. Thickness: 1 inch for sound attenuation, and R8 for thermal insulation.
   c. Thermal Conductivity (k-Value): 0.26 at 75 deg Fmean temperature.
   d. Fire-Hazard Classification: Maximum flame-spread index of 25 and smoke-developed index of 50 when tested according to ASTM E84.
   e. Water-Based Liner Adhesive: As recommended by insulation manufacturer and complying with NFPA 90A or NFPA 90B. For indoor applications, use adhesive that has a VOC content of 80 g/L or less when calculated according to 40 CFR 59, Subpart D (EPA Method 24).
   f. Mechanical Fasteners: Galvanized steel suitable for adhesive attachment, mechanical attachment, or welding attachment to duct without damaging liner when applied as recommended by manufacturer and without causing leakage in duct.
      1) Tensile Strength: Indefinitely sustain a 50-lb-tensile, dead-load test perpendicular to duct wall.
      2) Fastener Pin Length: As required for thickness of insulation and without projecting more than 1/8 inch into airstream.
      3) Adhesive for Attaching Mechanical Fasteners: Comply with fire-hazard classification of duct liner system.

3. Antimicrobial Erosion-Resistant Coating: Apply to the surface of the liner that will form the interior surface of the duct to act as a moisture repellent and erosion-resistant coating. Antimicrobial compound shall be tested for efficacy by an NRTL and registered by the EPA for use in HVAC systems.

2.6 SEALANT AND GASKETS

A. General Sealant and Gasket Requirements: Surface-burning characteristics for sealants and gaskets shall be a maximum flame-spread index of 25 and a maximum smoke-developed index of 50 when tested according to UL 723; certified by an NRTL.

B. Two-Part Tape Sealing System:
   1. Tape: Woven cotton fiber impregnated with mineral gypsum and modified acrylic/silicone activator to react exothermically with tape to form hard, durable, airtight seal.
   2. Tape Width: 4 inches.
   3. Sealant: Modified styrene acrylic.
   4. Water resistant.
   5. Mold and mildew resistant.
   6. Maximum Static-Pressure Class: 10-inch wg, positive and negative.
   7. Service: Indoor and outdoor.
   8. Service Temperature: Minus 40 to plus 200 deg F.
   9. Substrate: Compatible with galvanized sheet steel (both PVC coated and bare), stainless steel, or aluminum.
   10. For indoor applications, sealant shall have a VOC content of 250 g/L or less when calculated according to 40 CFR 59, Subpart D (EPA Method 24).

11. Sealant shall comply with the testing and product requirements of the California Department of Health Services' "Standard Practice for the Testing of Volatile Organic Emissions from Various Sources Using Small-Scale Environmental Chambers."

C. Water-Based Joint and Seam Sealant:
1. Application Method: Brush on.
2. Solids Content: Minimum 65 percent.
3. Shore A Hardness: Minimum 20.
4. Water resistant.
5. Mold and mildew resistant.
6. VOC: Maximum 75 g/L (less water).
7. Maximum Static-Pressure Class: 10-inch wg, positive and negative.
8. Service: Indoor or outdoor.
9. Substrate: Compatible with galvanized sheet steel (both PVC coated and bare), stainless steel, or aluminum sheets.

D. Flanged Joint Sealant: Comply with ASTM C 920.
1. General: Single-component, acid-curing, silicone, elastomeric.
2. Type: S.
3. Grade: NS.
4. Class: 25.
5. Use: O.
6. For indoor applications, sealant shall have a VOC content of 250 g/L or less when calculated according to 40 CFR 59, Subpart D (EPA Method 24).
7. Sealant shall comply with the testing and product requirements of the California Department of Health Services' "Standard Practice for the Testing of Volatile Organic Emissions from Various Sources Using Small-Scale Environmental Chambers."

E. Flange Gaskets: Butyl rubber, neoprene, or EPDM polymer with polyisobutylene plasticizer.

F. Round Duct Joint O-Ring Seals:
1. Seal shall provide maximum 3 cfm/100 sq. ft. at 1-inch wg and shall be rated for10-inch wg static-pressure class, positive or negative.
2. EPDM O-ring to seal in concave bead in coupling or fitting spigot.
3. Double-lipped, EPDM O-ring seal, mechanically fastened to factory-fabricated couplings and fitting spigots.

2.7 HANGERS AND SUPPORTS

A. Hanger Rods for Noncorrosive Environments: Cadmium-plated steel rods and nuts.

B. Hanger Rods for Corrosive Environments: Electrogalvanized, all-thread rods or galvanized rods with threads painted with zinc-chromate primer after installation.

C. Strap and Rod Sizes: Comply with SMACNA's "HVAC Duct Construction Standards - Metal and Flexible," Table 5-1, "Rectangular Duct Hangers Minimum Size," and Table 5-2, "Minimum Hanger Sizes for Round Duct."

D. Steel Cables for Galvanized-Steel Ducts: Galvanized steel complying with ASTM A 603.

E. Steel Cables for Stainless-Steel Ducts: Stainless steel complying with ASTM A 492.

F. Steel Cable End Connections: Cadmium-plated steel assemblies with brackets, swivel, and bolts designed for duct hanger service; with an automatic-locking and clamping device.

G. Duct Attachments: Sheet metal screws, blind rivets, or self-tapping metal screws; compatible with duct materials.

H. Trapeze and Riser Supports:
   1. Supports for Galvanized-Steel Ducts: Galvanized-steel shapes and plates.
   2. Supports for Stainless-Steel Ducts: Stainless-steel shapes and plates.
   3. Supports for Aluminum Ducts: Aluminum or galvanized steel coated with zinc chromate.

2.8 FIRE-STOPPING

A. Fire-Resistant Sealant: Provide two-part, foamed-in-place, fire-stopping silicone sealant, one-part elastomeric sealant, formulated for use in a through-penetration fire-stop system for filling openings around duct penetrations through walls and floors, having fire-resistance ratings indicated as established by testing identical assemblies per ASTM E 814 by Underwriters Laboratory, Inc. or other testing and inspecting agency acceptable to authorities having jurisdiction.

B. Products: Subject to compliance with requirements, products that may be incorporated in the Work are limited to, the following:
   1. "Dow Corning Fire Stop Foam"; Dow Corning Corp.
   2. "Dow Corning Fire Stop Sealant"; Dow Corning Corp.
   3. "3M Fire Barrier Caulk CP-25"; Electrical Products Div./3M.

C. Seams and laps arranged on top of duct.

PART 3 - EXECUTION

3.1 DUCT INSTALLATION

A. Drawing plans, schematics, and diagrams indicate general location and arrangement of duct system. Indicated duct locations, configurations, and arrangements were used to size ducts and calculate friction loss for air-handling equipment sizing and for other design considerations. Install duct systems as indicated unless deviations to layout are approved on Shop Drawings and Coordination Drawings.

B. Install ducts according to SMACNA's "HVAC Duct Construction Standards - Metal and Flexible" unless otherwise indicated.

C. Install round and flat-oval ducts in maximum practical lengths.

D. Install ducts with fewest possible joints.

E. Install factory- or shop-fabricated fittings for changes in direction, size, and shape and for branch connections.

F. Unless otherwise indicated, install ducts vertically and horizontally, and parallel and perpendicular to building lines.

G. Install ducts close to walls, overhead construction, columns, and other structural and permanent enclosure elements of building.

H. Install ducts with a clearance of 1 inch, plus allowance for insulation thickness.

I. Route ducts to avoid passing through transformer vaults and electrical equipment rooms and enclosures.

J. Where ducts pass through non-fire-rated interior partitions and exterior walls and are exposed to view, cover the opening between the partition and duct or duct insulation with sheet metal flanges of same metal thickness as the duct. Overlap openings on four sides by at least 1-1/2 inches.

K. Where ducts pass through fire-rated interior partitions and exterior walls, install fire dampers. Comply with requirements in Section 233300 "Air Duct Accessories" for fire and smoke dampers.

L. Protect duct interiors from moisture, construction debris and dust, and other foreign materials. Comply with SMACNA's "IAQ Guidelines for Occupied Buildings Under Construction," Appendix G, "Duct Cleanliness for New Construction Guidelines."

3.2 INSTALLATION OF EXPOSED DUCTWORK

A. Protect ducts exposed in finished spaces from being dented, scratched, or damaged.

B. Trim duct sealants flush with metal. Create a smooth and uniform exposed bead. Do not use two-part tape sealing system.

C. Grind welds to provide smooth surface free of burrs, sharp edges, and weld splatter. When welding stainless steel with a No. 3 or 4 finish, grind the welds flush, polish the exposed welds, and treat the welds to remove discoloration caused by welding.

D. Maintain consistency, symmetry, and uniformity in the arrangement and fabrication of fittings, hangers and supports, duct accessories, and air outlets.

E. Repair or replace damaged sections and finished work that does not comply with these requirements.

3.3 APPLICATION OF LINER IN RECTANGULAR DUCTS

A. Adhere a single layer of indicated thickness of duct liner with at least 90 percent adhesive coverage at liner contact surface area. Attaining indicated thickness with multiple layers of duct liner is prohibited.

B. Apply adhesive to transverse edges of liner facing upstream that do not receive metal nosing.

C. Butt transverse joints without gaps and coat joint with adhesive.

D. Fold and compress liner in corners of rectangular ducts or cut and fit to ensure butted-edge overlapping.

E. Do not apply liner in rectangular ducts with longitudinal joints, except at corners of ducts, unless duct size and standard liner product dimensions make longitudinal joints necessary.

F. Apply adhesive coating on longitudinal seams in ducts with air velocity of 2500 fpm.

G. Secure liner with mechanical fasteners 4 inches from corners and at intervals not exceeding 12 inches transversely; at 3 inches from transverse joints and at intervals not exceeding 18 inches longitudinally.

H. Secure transversely oriented liner edges facing the airstream with metal nosings that have either channel or "Z" profiles or are integrally formed from duct wall. Fabricate edge facings at the following locations:
   1. Fan discharges.
   2. Intervals of lined duct preceding unlined duct.
   3. Upstream edges of transverse joints in ducts where air velocities are greater than 2500 fpm or where indicated.

I. Terminate inner ducts with buildouts attached to fire-damper sleeves, dampers, turning vane assemblies, or other devices. Fabricated buildouts (metal hat sections) or other buildout means are optional; when used, secure buildouts to duct walls with bolts, screws, rivets, or welds.

3.4 DUCT SEALING

A. Seal ducts for duct static-pressure, seal classes, and leakage classes specified in "Duct Schedule" Article according to SMACNA's "HVAC Duct Construction Standards - Metal and Flexible."

B. Seal ducts to the following seal classes according to SMACNA's "HVAC Duct Construction Standards - Metal and Flexible", and as defined below.
   1. Comply with SMACNA's "HVAC Duct Construction Standards - Metal and Flexible."
   2. All Ducts U.N.O: Seal Class A.
   3. Unconditioned Space, Return-Air Ducts: Seal Class B.
   4. Conditioned Space, Return-Air Ducts: Seal Class C.

3.5 HANGER AND SUPPORT INSTALLATION

A. Comply with SMACNA's "HVAC Duct Construction Standards - Metal and Flexible," Chapter 5, "Hangers and Supports."

B. Building Attachments: Concrete inserts, powder-actuated fasteners, or structural-steel fasteners appropriate for construction materials to which hangers are being attached.
   1. Where practical, install concrete inserts before placing concrete.
   2. Do not use powder-actuated concrete fasteners for lightweight-aggregate concretes or for slabs less than 4 inches thick.

C. Hanger Spacing: Comply with SMACNA's "HVAC Duct Construction Standards - Metal and Flexible," Table 5-1, "Rectangular Duct Hangers Minimum Size," and Table 5-2, "Minimum Hanger Sizes for Round Duct," for maximum hanger spacing; install hangers and supports within 24 inches of each elbow and within 48 inches of each branch intersection.

D. Hangers Exposed to View: Threaded rod and angle or channel supports.

E. Support vertical ducts with steel angles or channel secured to the sides of the duct with welds, bolts, sheet metal screws, or blind rivets; support at each floor and at a maximum intervals of 16 feet.

F. Install upper attachments to structures. Select and size upper attachments with pull-out, tension, and shear capacities appropriate for supported loads and building materials where used.

3.6 CONNECTIONS

A. Make connections to equipment with flexible connectors complying with Section 233300 "Air Duct Accessories."

B. Comply with SMACNA's "HVAC Duct Construction Standards - Metal and Flexible" for branch, outlet and inlet, and terminal unit connections.

3.7 PAINTING

A. Paint interior of metal ducts that are visible through registers and grilles and that do not have duct liner. Apply one coat of flat, black, latex paint over a compatible galvanized-steel primer. Paint materials and application requirements are specified in Division 9 Sections.

3.8 FIELD QUALITY CONTROL

A. Perform tests and inspections.

B. Leakage Tests:
   1. **Comply with requirements for Leakage Class A for sealing all ducts.** Refer to SMACNA's "HVAC Air Duct Leakage Test Manual." Submit a test report for each test.
   2. Test the following systems:
      a. Supply, Return, Exhaust, Outdoor Ducts with a Pressure Class of 2-Inch wg or Higher: Test representative duct sections, selected by Engineer from sections installed, totaling no less than 50 percent of total installed duct area for each designated pressure class.
      b. Engineer will randomly designate two supply duct systems for testing in accordance with Section 4 of SMACNA HVAC Air Duct Leakage Test Manual, current edition. If leakage test results exceed SMACNA allowable leakage rates, then additional two systems shall be tested. Supply duct test section shall include main trunk line from the mechanical room to the farthest VAV box. For systems without VAV boxes, main trunk shall be determined on site

3. Disassemble, reassemble, and seal segments of systems to accommodate leakage testing and for compliance with test requirements.
4. Test for leaks before applying external insulation.
5. Conduct tests at static pressures equal to maximum design pressure of system or section being tested. If static-pressure classes are not indicated, test system at maximum system design pressure. Do not pressurize systems above maximum design operating pressure.
6. Give seven days' advance notice for testing.

C. Duct System Cleanliness Tests:
1. Visually inspect duct system to ensure that no visible contaminants are present.
2. Test sections of metal duct system, chosen randomly by Owner, for cleanliness according to "Vacuum Test" in NADCA ACR, "Assessment, Cleaning and Restoration of HVAC Systems."
a. Acceptable Cleanliness Level: Net weight of debris collected on the filter media shall not exceed 0.75 mg/100 sq. cm.

D. Duct system will be considered defective if it does not pass tests and inspections.

E. Prepare test and inspection reports.

3.9 DUCT CLEANING

A. Clean new and existing duct system(s) before testing, adjusting, and balancing.

B. Use service openings for entry and inspection.
1. Create new openings and install access panels appropriate for duct static-pressure class if required for cleaning access. Provide insulated panels for insulated or lined duct. Patch insulation and liner as recommended by duct liner manufacturer. Comply with Section 233300 "Air Duct Accessories" for access panels and doors.
2. Disconnect and reconnect flexible ducts as needed for cleaning and inspection.
3. Remove and reinstall ceiling to gain access during the cleaning process.

C. Particulate Collection and Odor Control:
1. When venting vacuuming system inside the building, use HEPA filtration with 99.97 percent collection efficiency for 0.3-micron-size (or larger) particles.
2. When venting vacuuming system to outdoors, use filter to collect debris removed from HVAC system, and locate exhaust downwind and away from air intakes and other points of entry into building.

D. Clean the following components by removing surface contaminants and deposits:
1. Air outlets and inlets (registers, grilles, and diffusers).
2. Supply, return, and exhaust fans including fan housings, plenums (except ceiling supply and return plenums), scrolls, blades or vanes, shafts, baffles, dampers, and drive assemblies.
3. Air-handling unit internal surfaces and components including mixing box, coil section, air wash systems, spray eliminators, condensate drain pans, humidifiers and dehumidifiers, filters and filter sections, and condensate collectors and drains.
4. Coils and related components.
5. Return-air ducts, dampers, actuators, and turning vanes except in ceiling plenums and mechanical equipment rooms.

6. Supply-air ducts, dampers, actuators, and turning vanes.
7. Dedicated exhaust and ventilation components and makeup air systems.

E. Mechanical Cleaning Methodology:
1. Clean metal duct systems using mechanical cleaning methods that extract contaminants from within duct systems and remove contaminants from building.
2. Use vacuum-collection devices that are operated continuously during cleaning. Connect vacuum device to downstream end of duct sections so areas being cleaned are under negative pressure.
3. Use mechanical agitation to dislodge debris adhered to interior duct surfaces without damaging integrity of metal ducts, duct liner, or duct accessories.
4. Clean fibrous-glass duct liner with HEPA vacuuming equipment; do not permit duct liner to get wet. Replace fibrous-glass duct liner that is damaged, deteriorated, or delaminated or that has friable material, mold, or fungus growth.
5. Clean coils and coil drain pans according to NADCA 1992. Keep drain pan operational. Rinse coils with clean water to remove latent residues and cleaning materials; comb and straighten fins.
6. Provide drainage and cleanup for wash-down procedures.
7. Antimicrobial Agents and Coatings: Apply EPA-registered antimicrobial agents if fungus is present. Apply antimicrobial agents according to manufacturer's written instructions after removal of surface deposits and debris.

3.10 START UP

A. Air Balance: Comply with requirements in Section 230593 "Testing, Adjusting, and Balancing for HVAC."

3.11 DUCT SCHEDULE

A. Fabricate ducts with galvanized sheet steel except as otherwise indicated and as follows:

A. Supply Ducts:
1. Ducts Connected to Fan Coil Units, and Terminal Units:
   a. Pressure Class: Positive 2-inch wg.
   b. Minimum SMACNA Seal Class: A
2. Ducts Connected to Constant-Volume Air-Handling Units
   a. Pressure Class: Positive 3-inch wg
   b. Minimum SMACNA Seal Class: A
3. Ducts Connected to Variable-Air-Volume Air-Handling Units:
   a. Pressure Class: Positive 4-inch wg.
   b. Minimum SMACNA Seal Class: A

B. Return Ducts:
1. Ducts Connected to Fan Coil Units, and Terminal Units
   a. Pressure Class: Positive or negative 2-inch wg
   b. Minimum SMACNA Seal Class: B.
2. Ducts Connected to Air-Handling Units
   a. Pressure Class: Positive or negative 3-inch wg
   b. Minimum SMACNA Seal Class: B

C. Exhaust Ducts:
   1. Ducts Connected to Fans Exhausting (ASHRAE 62.1, Class 1 and 2) Air:
      a. Pressure Class: Negative 2-inch wg
      b. Minimum SMACNA Seal Class: A

D. Outdoor-Air (Not Filtered, Heated, or Cooled) Ducts:
   1. Ducts Connected to AHUs, Fan Coil Units, Furnaces, Heat Pumps, and Terminal Units
      a. Pressure Class: Positive or negative 2-inch wg
      b. Minimum SMACNA Seal Class: A

E. Double-Wall Duct Interstitial Insulation:
   1. Supply Air Ducts: 2 inches thick, unless noted otherwise on drawings.

F. Elbow Configuration:
   1. Rectangular Duct: Comply with SMACNA's "HVAC Duct Construction Standards - Metal and Flexible," Figure 2-2, "Rectangular Elbows."
      a. Double Skin vaned elbows. See drawings.
   2. Round Duct: Comply with SMACNA's "HVAC Duct Construction Standards - Metal and Flexible," Figure 3-3, "Round Duct Elbows."
      a. Minimum Radius-to-Diameter Ratio and Elbow Segments: Comply with SMACNA's "HVAC Duct Construction Standards - Metal and Flexible," Table 3-1, "Mitered Elbows." Elbows with less than 90-degree change of direction have proportionately fewer segments.
         1) Radius-to Diameter Ratio: 1.5.
      b. Round Elbows, 12 Inches and Smaller in Diameter: Stamped or pleated.
      c. Round Elbows, 14 Inches and Larger in Diameter: Standing seam.

G. Branch Configuration:
   1. Rectangular Duct: Comply with SMACNA's "HVAC Duct Construction Standards - Metal and Flexible," Figure 4-6, "Branch Connection."
      a. Rectangular Main to Rectangular Branch: 45-degree entry.
      b. Rectangular Main to Round Branch: Spin in.
   2. Round and Flat Oval: Comply with SMACNA's "HVAC Duct Construction Standards - Metal and Flexible," Figure 3-5, "90 Degree Tees and Laterals," and Figure 3-6, "Conical Tees." Saddle taps are permitted in existing duct.
      a. Velocity 1000 fpm or Lower: 90-degree tap.
      b. Velocity 1000 to 1500 fpm: Conical tap.
      c. Velocity 1500 fpm or Higher: 45-degree lateral.

END OF SECTION 233113

SECTION 233300 - AIR DUCT ACCESSORIES

PART 1 - GENERAL

1.1 RELATED DOCUMENTS

A. Drawings and general provisions of the Contract, including General and Supplementary Conditions and Division 01 Specification Sections, apply to this Section.

1.2 SUMMARY

A. Section Includes:

1. Backdraft and pressure relief dampers.
2. Barometric relief dampers.
3. Manual volume dampers.
4. Control dampers.
5. Fire dampers.
6. Flange connectors.
7. Turning vanes.
8. Remote damper operators.
9. Duct-mounted access doors.
10. Flexible connectors.
11. Flexible ducts.
12. Duct accessory hardware.

1.3 ACTION SUBMITTALS

A. Product Data: For each type of product.

B. Shop Drawings: For duct accessories. Include plans, elevations, sections, details and attachments to other work.

1. Detail duct accessories fabrication and installation in ducts and other construction. Include dimensions, weights, loads, and required clearances; and method of field assembly into duct systems and other construction. Include the following:

a. Special fittings.
b. Manual volume damper installations.
c. Control-damper installations.
d. Fire-damper, smoke-damper, combination fire- and smoke-damper, ceiling, and corridor-damper installations, including sleeves; and duct-mounted access doors and remote damper operators.
e. Duct security bars.
f. Wiring Diagrams: For power, signal, and control wiring.

1.4 INFORMATIONAL SUBMITTALS

A. Coordination Drawings: Reflected ceiling plans, drawn to scale, on which ceiling-mounted access panels and access doors required for access to duct accessories are shown and coordinated with each other, using input from Installers of the items involved.

B. Source quality-control reports.

1.5 CLOSEOUT SUBMITTALS

A. Operation and Maintenance Data: For air duct accessories to include in operation and maintenance manuals.

1.6 MAINTENANCE MATERIAL SUBMITTALS

A. Furnish extra materials that match products installed and that are packaged with protective covering for storage and identified with labels describing contents.

1. Fusible Links: Furnish quantity equal to 10 percent of amount installed.

1.7 QUALITY ASSURANCE

A. Comply with NFPA 90A, "Installation of Air Conditioning and Ventilating Systems," and with NFPA 90B, "Installation of Warm Air Heating and Air Conditioning Systems."

B. Comply with AMCA 500-D testing for damper rating.

PART 2 - PRODUCTS

2.1 ASSEMBLY DESCRIPTION

A. Comply with NFPA 90A, "Installation of Air Conditioning and Ventilating Systems," and with NFPA 90B, "Installation of Warm Air Heating and Air Conditioning Systems."

B. Comply with SMACNA's "HVAC Duct Construction Standards - Metal and Flexible" for acceptable materials, material thicknesses, and duct construction methods unless otherwise indicated. Sheet metal materials shall be free of pitting, seam marks, roller marks, stains, discolorations, and other imperfections.

2.2 MATERIALS

A. Galvanized Sheet Steel: Comply with ASTM A 653/A 653M.

1. Galvanized Coating Designation: G90.
2. Exposed-Surface Finish: Mill phosphatized.

B. Stainless-Steel Sheets: Comply with ASTM A 480/A 480M, Type 304.

C. Aluminum Sheets: Comply with ASTM B 209, Alloy 3003, Temper H14; with mill finish for concealed ducts and standard, 1-side bright finish for exposed ducts.

D. Extruded Aluminum: Comply with ASTM B 221, Alloy 6063, Temper T6.

E. Reinforcement Shapes and Plates: Galvanized-steel reinforcement where installed on galvanized sheet metal ducts; compatible materials for aluminum and stainless-steel ducts.

F. Tie Rods: Galvanized steel, 1/4-inch minimum diameter for lengths 36 inches or less; 3/8-inch minimum diameter for lengths longer than 36 inches.

2.3 BACKDRAFT AND PRESSURE RELIEF DAMPERS

A. Manufacturers: Subject to compliance with requirements, provide products by one of the following:

1. Greenheck Fan Corporation.
2. Nailor Industries Inc.
3. Pottorff.
4. Ruskin Company.

B. Description: Gravity balanced. Blades of maximum 6-inch width, with sealed edges, assembled in rattle-free manner, steel ball bearings, and axles.

C. Frame: Hat-shaped, 0.05-inch-thick, galvanized sheet steel, with welded corners and mounting flange.

D. Blades: Multiple single-piece blades, 0.050-inch-thick aluminum sheet with sealed edges.

E. Blade Action: Parallel.

F. Blade Seals: Neoprene, mechanically locked.

G. Blade Axles:

1. Material: Galvanized steel.

H. Tie Bars and Brackets: Galvanized steel.

I. Return Spring: Adjustable tension.

J. Accessories:

1. Adjustment device to permit setting for varying differential static pressure.
2. Counterweights and spring-assist kits for vertical airflow installations.
3. Electric actuators, where noted.
4. Chain pulls.
5. Screen Mounting: Front mounted in sleeve.

a. Sleeve Thickness: 20 gage minimum.
b. Sleeve Length: 6 inches minimum.

6. Screen Mounting: Rear mounted.
7. Screen Material: Stainless steel.
8. Screen Type: Bird.
9. 90-degree stops.

2.4 MANUAL VOLUME DAMPERS

A. Standard, Steel, Manual Volume Dampers:

1. Manufacturers: Subject to compliance with requirements, provide products by one of the following:

a. Flexmaster U.S.A., Inc.
b. McGill AirFlow LLC.
c. Nailor Industries Inc.
d. Pottorff.
e. Ruskin Company.

2. Standard leakage rating, with linkage outside airstream.

3. Suitable for horizontal or vertical applications.
4. Frames:

a. Frame: Hat-shaped, 0.094-inch-thick, galvanized sheet steel.
b. Mitered and welded corners.
c. Flanges for attaching to walls and flangeless frames for installing in ducts.

5. Blades:

a. Multiple or single blade.
b. Parallel- or opposed-blade design.
c. Stiffen damper blades for stability.
d. Galvanized-steel, 0.064 inch thick.

6. Blade Axles: Galvanized steel.

7. Tie Bars and Brackets: Galvanized steel.

B. Standard, Aluminum, Manual Volume Dampers:

1. Manufacturers: Subject to compliance with requirements, provide products by one of the following:

a. McGill AirFlow LLC.
b. Nailor Industries Inc.
c. Pottorff.
d. Ruskin Company.

2. Standard leakage rating, with linkage outside airstream.

3. Suitable for horizontal or vertical applications.
4. Frames: Hat-shaped, 0.10-inch-thick, aluminum sheet channels; frames with flanges for attaching to walls and flangeless frames for installing in ducts.
5. Blades:

    a. Multiple or single blade.
    b. Parallel- or opposed-blade design.
    c. Stiffen damper blades for stability.
    d. Roll-Formed Aluminum Blades: 0.10-inch-thick aluminum sheet.
    e. Extruded-Aluminum Blades: 0.050-inch-thick extruded aluminum.

6. Blade Axles: Galvanized steel.

7. Tie Bars and Brackets: Aluminum.

C. Low-Leakage, Steel, Manual Volume Dampers:

1. Manufacturers: Subject to compliance with requirements, provide products by one of the following:

    a. Pottorff.
    b. Ruskin Company.

2. Comply with AMCA 500-D testing for damper rating.
3. Low-leakage rating, with linkage outside airstream, and bearing AMCA's Certified Ratings Seal for both air performance and air leakage.
4. Suitable for horizontal or vertical applications.
5. Frames:

    a. Hat shaped.
    b. 0.094-inch-thick, galvanized sheet steel.
    c. Mitered and welded corners.
    d. Flanges for attaching to walls and flangeless frames for installing in ducts.

6. Blades:

    a. Multiple or single blade.
    b. Parallel- or opposed-blade design.
    c. Stiffen damper blades for stability.
    d. Galvanized, roll-formed steel, 0.064 inch thick.

7. Blade Axles: Galvanized steel.

8. Blade Seals: Neoprene.
9. Tie Bars and Brackets: Galvanized steel.
10. Accessories:

    a. Include locking device to hold single-blade dampers in a fixed position without vibration.

D. Low-Leakage, Aluminum, Manual Volume Dampers:

1. Manufacturers: Subject to compliance with requirements, provide products by one of the following:

   a. Pottorff.
   b. Ruskin Company.

2. Comply with AMCA 500-D testing for damper rating.
3. Low-leakage rating, with linkage outside airstream, and bearing AMCA's Certified Ratings Seal for both air performance and air leakage.
4. Suitable for horizontal or vertical applications.
5. Frames: Hat-shaped, 0.10-inch-thick, aluminum sheet channels; frames with flanges for attaching to walls and flangeless frames for installing in ducts.
6. Blades:

   a. Multiple or single blade.
   b. Parallel- or opposed-blade design.
   c. Roll-Formed Aluminum Blades: 0.10-inch-thick aluminum sheet.
   d. Extruded-Aluminum Blades: 0.050-inch-thick extruded aluminum.

7. Blade Axles: Galvanized steel.

8. Blade Seals: Neoprene.
9. Tie Bars and Brackets: Aluminum.
10. Accessories:

    a. Include locking device to hold single-blade dampers in a fixed position without vibration.

E. Jackshaft:

1. Size: 1-inch diameter.
2. Material: Galvanized-steel pipe rotating within pipe-bearing assembly mounted on supports at each mullion and at each end of multiple-damper assemblies.
3. Length and Number of Mountings: As required to connect linkage of each damper in multiple-damper assembly.

F. Damper Hardware:

1. Zinc-plated, die-cast core with dial and handle made of 3/32-inch-thick zinc-plated steel, and a 3/4-inch hexagon locking nut.
2. Include center hole to suit damper operating-rod size.
3. Include elevated platform for insulated duct mounting.

2.5 CONTROL DAMPERS

A. Manufacturers: Subject to compliance with requirements, provide products by one of the following:

1. Greenheck Fan Corporation.
2. Pottorff.
3. Ruskin Company.
4. Young Regulator Company.

B. Low-leakage rating, with linkage outside airstream, and bearing AMCA's Certified Ratings Seal for both air performance and air leakage.

C. Frames:

1. Hat shaped.
2. 0.094-inch-thick, galvanized sheet steel.
3. Mitered and welded corners.

D. Blades:

1. Multiple blade with maximum blade width of 6 inches.
2. Opposed-blade design.
3. Galvanized-steel.
4. 0.064 inch thick single skin.
5. Blade Edging: Closed-cell neoprene.
6. Blade Edging: Inflatable seal blade edging, or replaceable rubber seals.

E. Blade Axles: 1/2-inch-diameter; galvanized steel; blade-linkage hardware of zinc-plated steel and brass; ends sealed against blade bearings.

1. Operating Temperature Range: From minus 40 to plus 200 deg F.

F. Bearings:

1. Molded synthetic.
2. Dampers in ducts with pressure classes of 3-inch wg or less shall have axles full length of damper blades and bearings at both ends of operating shaft.
3. Thrust bearings at each end of every blade.

2.6 FIRE DAMPERS

A. Manufacturers: Subject to compliance with requirements, provide products by one of the following:

1. Greenheck Fan Corporation.
2. Pottorff.
3. Ruskin Company.

B. Type: Dynamic; rated and labeled according to UL 555 by an NRTL.

C. Closing rating in ducts up to 4-inch wg static pressure class and minimum 2000-fpm velocity.

D. Fire Rating: 1-1/2 hours.

E. Frame: Curtain type with blades outside airstream; fabricated with roll-formed, 0.034-inch-thick galvanized steel; with mitered and interlocking corners.

F. Mounting Sleeve: Factory- or field-installed, galvanized sheet steel.

1. Minimum Thickness: 0.138 inch thick, as indicated, and of length to suit application.
2. Exception: Omit sleeve where damper-frame width permits direct attachment of perimeter mounting angles on each side of wall or floor; thickness of damper frame must comply with sleeve requirements.

G. Mounting Orientation: Vertical or horizontal as indicated.

H. Blades: Roll-formed, interlocking, 0.034-inch- thick, galvanized sheet steel. In place of interlocking blades, use full-length, 0.034-inch-thick, galvanized-steel blade connectors.

I. Horizontal Dampers: Include blade lock and stainless-steel closure spring.

J. Heat-Responsive Device: Replaceable, 165 deg F rated, fusible links.

2.7 FLANGE CONNECTORS

A. Manufacturers: Subject to compliance with requirements, provide products by one of the following:

1. Ductmate Industries, Inc.
2. Nexus PDQ.
3. Ward Industries, Inc.

B. Description: Factory-fabricated, slide-on transverse flange connectors, gaskets, and components.

C. Material: Galvanized steel.

D. Gage and Shape: Match connecting ductwork.

2.8 TURNING VANES

A. Manufacturers: Subject to compliance with requirements, provide products by one of the following:

1. Ductmate Industries, Inc.
2. METALAIRE, Inc.
3. SEMCO Incorporated.
4. Ward Industries, Inc.

B. Manufactured Turning Vanes for Metal Ducts: Curved blades of galvanized sheet steel; support with bars perpendicular to blades set; set into vane runners suitable for duct mounting.

1. Acoustic Turning Vanes: Fabricate airfoil-shaped aluminum extrusions with perforated faces and fibrous-glass fill.

C. General Requirements: Comply with SMACNA's "HVAC Duct Construction Standards - Metal and Flexible"; Figures 4-3, "Vanes and Vane Runners," and 4-4, "Vane Support in Elbows."

D. Vane Construction: Double wall.

2.9 REMOTE DAMPER OPERATORS

A. Manufacturers: Subject to compliance with requirements, provide products by one of the following:

1. Pottorff.
2. Young Regulator Company.

B. Description: Cable system designed for remote manual damper adjustment.

C. Tubing: Brass.

D. Cable: Stainless steel.

E. Wall-Box Cover-Plate Material: Stainless steel.

2.10 DUCT-MOUNTED ACCESS DOORS

A. Manufacturers: Subject to compliance with requirements, provide products by one of the following:

1. Flexmaster U.S.A., Inc.
2. Greenheck Fan Corporation.
3. Pottorff.

B. Duct-Mounted Access Doors: Fabricate access panels according to SMACNA's "HVAC Duct Construction Standards - Metal and Flexible"; Figures 7-2, "Duct Access Doors and Panels," and 7-3, "Access Doors - Round Duct."

1. Door:

a. Double wall, rectangular.
b. Galvanized sheet metal with insulation fill and thickness as indicated for duct pressure class.
c. Vision panel.
d. Hinges and Latches: 1-by-1-inch butt or piano hinge and cam latches.
e. Fabricate doors airtight and suitable for duct pressure class.

2. Frame: Galvanized sheet steel, with bend-over tabs and foam gaskets.

2.11 FLEXIBLE CONNECTORS

A. Manufacturers: Subject to compliance with requirements, provide products by one of the following:

1. Ductmate Industries, Inc.
2. Duro Dyne Inc.
3. Ward Industries, Inc.

B. Materials: Flame-retardant or noncombustible fabrics.

C. Coatings and Adhesives: Comply with UL 181, Class 1.

D. Metal-Edged Connectors: Factory fabricated with a fabric strip 5-3/4 inches wide attached to two strips of 2-3/4-inch-wide, 0.028-inch-thick, galvanized sheet steel or 0.032-inch-thick aluminum sheets. Provide metal compatible with connected ducts.

E. Indoor System, Flexible Connector Fabric: Glass fabric double coated with neoprene.

1. Minimum Weight: 26 oz./sq. yd..
2. Tensile Strength: 480 lbf/inch in the warp and 360 lbf/inch in the filling.
3. Service Temperature: Minus 40 to plus 200 deg F.

F. Outdoor System, Flexible Connector Fabric: Glass fabric double coated with weatherproof, synthetic rubber resistant to UV rays and ozone.

1. Minimum Weight: 24 oz./sq. yd..
2. Tensile Strength: 530 lbf/inch in the warp and 440 lbf/inch in the filling.
3. Service Temperature: Minus 50 to plus 250 deg F.

G. High-Temperature System, Flexible Connectors: Glass fabric coated with silicone rubber.

1. Minimum Weight: 16 oz./sq. yd..
2. Tensile Strength: 285 lbf/inch in the warp and 185 lbf/inch in the filling.
3. Service Temperature: Minus 67 to plus 500 deg F.

H. High-Corrosive-Environment System, Flexible Connectors: Glass fabric with chemical-resistant coating.

1. Minimum Weight: 14 oz./sq. yd..
2. Tensile Strength: 450 lbf/inch in the warp and 340 lbf/inch in the filling.
3. Service Temperature: Minus 67 to plus 500 deg F.

2.12 FLEXIBLE DUCTS

A. Manufacturers: Subject to compliance with requirements, provide products by the following:

1. Flexmaster U.S.A., Inc.
2. Thermaflex

A. Where acoustical flexible duct is shown on drawings, provide Flexmaster Type 8M (or Thermaflex M-KE) UL 181 Class I Air Duct or equal.

B. The duct shall be constructed of a CPE fabric supported by helical wound galvanized steel. The fabric shall be mechanically locked to the steel helix without the use of adhesives or chemicals.

C. The internal working pressure rating shall be at least 6" w.g. positive and 4" w.g. negative through 16" diameter, and 1" w.g. negative for 18" and 20" diameters, with a bursting pressure of at least 2 ½ time the working pressure.

D. The duct shall be rated for a velocity of at lease 4000 feet per minute.

E. The duct must be suitable for continuous operation at a temperature range of -20° F to +250° F.

F. Factory insulate the flexible duct with fiberglass insulation. The R-value shall be at least 8 at a mean temperature of 75° F.

G. Cover the insulation with a fire retardant metalized vapor barrier jacket reinforced with crosshatched scrim having a permeance of not greater than 0.05 perms when tested in accordance with ASTM E96, Procedure.

H. Sound attenuation Properties: Acoustical performance, when tested by an independent laboratory in accordance with the Air Diffusion Council's Flexible Air Duct Test Code FD 72-R1, Section 3.0, Sound Properties, shall be as follows:

Octave Band	**2**	**3**	**4**	**5**	**6**	**7**
Hz.	125	250	500	1000	2000	4000
6" diameter	7	31	40	38	40	27
8" diameter	13	29	36	35	38	22
12" diameter	21	28	29	33	26	12

I. Flexible Duct Connectors:

1. Clamps: Stainless-steel band with cadmium-plated hex screw to tighten band with a worm-gear action in sizes 3 through 18 inches, to suit duct size.

2.13 DUCT SECURITY BARS

A. Description: **Field- or factory-fabricated and field-installed** duct security bars.

B. Configuration:
1. Sleeve: **Continuously welded** steel frames with angle frame. To be poured in place or set with concrete block or welded or bolted to wall, one side only. Duct connections on both sides.
2. Bar Spacing: **6 inches**

2.14 DUCT ACCESSORY HARDWARE

A. Instrument Test Holes: Cast iron or cast aluminum to suit duct material, including screw cap and gasket. Size to allow insertion of pitot tube and other testing instruments and of length to suit duct-insulation thickness.

B. Adhesives: High strength, quick setting, neoprene based, waterproof, and resistant to gasoline and grease.

PART 3 - EXECUTION

3.1 INSTALLATION

A. Install duct accessories according to applicable details in SMACNA's "HVAC Duct Construction Standards - Metal and Flexible" for metal ducts and in NAIMA AH116, "Fibrous Glass Duct Construction Standards," for fibrous-glass ducts.

B. Install duct accessories of materials suited to duct materials; use galvanized-steel accessories in galvanized-steel and fibrous-glass ducts, stainless-steel accessories in stainless-steel ducts, and aluminum accessories in aluminum ducts.

C. Install backdraft dampers (control dampers for fans 2,000CFM and larger) at inlet of exhaust fans or exhaust ducts as close as possible to exhaust fan unless otherwise indicated.

D. Install volume dampers at points on supply, return, and exhaust systems where branches extend from larger ducts. Where dampers are installed in ducts having duct liner, install dampers with hat channels of same depth as liner, and terminate liner with nosing at hat channel.

1. Install steel volume dampers in steel ducts.
2. Install aluminum volume dampers in aluminum ducts.

E. Set dampers to fully open position before testing, adjusting, and balancing.

F. Install test holes at fan inlets and outlets and elsewhere as indicated.

G. Install fire and smoke dampers according to UL listing.

H. Duct security bars:

1. Construct duct security bars from **0.164-inch** steel sleeve, continuously welded at all joints, and **1/2-inch-** diameter steel bars, **6 inches** o.c. in each direction in center of sleeve. Weld each bar to steel sleeve and each crossing bar. Weld **2-1/2-by-2-1/2-by-1/4-inch** steel angle to four sides and both ends of sleeve.
2. Connect duct security bars to ducts with flexible connections. Provide 12-by-12-inch hinged access panel with cam lock in duct in each side of sleeve.
3. Secure duct security bar assembly to building structure **as indicated in manufacturer's installation instructions**.

I. Install duct access doors on sides of ducts to allow for inspecting, adjusting, and maintaining accessories and equipment at the following locations:

1. On both sides of duct coils.
2. Upstream from duct filters.
3. At outdoor-air intakes and mixed-air plenums.
4. At drain pans and seals.
5. Downstream from manual volume dampers, control dampers, backdraft dampers, and equipment.
6. Adjacent to and close enough to fire or smoke dampers, to reset or reinstall fusible links. Access doors for access to fire or smoke dampers having fusible links shall be pressure

relief access doors and shall be outward operation for access doors installed upstream from dampers and inward operation for access doors installed downstream from dampers.

7. At each change in direction and at maximum 50-foot spacing.
8. Upstream from turning vanes.
9. Upstream or downstream from duct silencers.
10. Control devices requiring inspection.
11. Elsewhere as indicated.

J. Install access doors with swing against duct static pressure.

K. Access Door Sizes:

1. One-Hand or Inspection Access: 8 by 5 inches.
2. Two-Hand Access: 12 by 6 inches.
3. Head and Hand Access: 18 by 10 inches.
4. Head and Shoulders Access: 21 by 14 inches.
5. Body Access: 25 by 14 inches.
6. Body plus Ladder Access: 25 by 17 inches.

L. Label access doors according to Section 230553 "Identification for HVAC Piping and Equipment" to indicate the purpose of access door.

M. Install flexible connectors to connect ducts to equipment.

N. For fans developing static pressures of 5-inch wg and more, cover flexible connectors with loaded vinyl sheet held in place with metal straps.

O. Connect terminal units to supply ducts directly, and for fan powered boxes with maximum 12-inch lengths of flexible duct. Do not use flexible ducts to change directions.

P. Connect flexible ducts to metal ducts with stainless steel draw bands.

Q. Install duct test holes where required for testing and balancing purposes.

3.2 FIELD QUALITY CONTROL

A. Tests and Inspections:

1. Operate dampers to verify full range of movement.
2. Inspect locations of access doors and verify that purpose of access door can be performed.
3. Operate fire, smoke, and combination fire and smoke dampers to verify full range of movement and verify that proper heat-response device is installed.
4. Inspect turning vanes for proper and secure installation.
5. Operate remote damper operators to verify full range of movement of operator and damper.

END OF SECTION 233300

SECTION 233423 - HVAC POWER VENTILATORS

PART 1 - GENERAL

1.1 RELATED DOCUMENTS

A. Drawings and general provisions of the Contract, including General and Supplementary Conditions and Division 01 Specification Sections, apply to this Section.

1.2 SUMMARY

A. Section Includes:
   1. Centrifugal roof ventilators.

1.3 PERFORMANCE REQUIREMENTS

A. Project Altitude: Base fan-performance ratings on sea level.

B. Operating Limits: Classify according to AMCA 99.

C. Delegated Design: Design roof curbs to comply with **wind** performance requirements, including comprehensive engineering analysis by a qualified professional engineer, using performance requirements and design criteria indicated.

D. Wind-Restraint Performance rated for basic Wind Speed: Rated for project location.

1.4 ACTION SUBMITTALS

A. Product Data: For each type of product indicated. Include rated capacities, operating characteristics, and furnished specialties and accessories. Also include the following:
   1. Certified fan performance curves with system operating conditions indicated.
   2. Certified fan sound-power ratings.
   3. Motor ratings and electrical characteristics, plus motor and electrical accessories.
   4. Material thickness and finishes, including color charts.
   5. Dampers, including housings, linkages, and operators.
   6. Fan speed controllers.
   7. Roof curbs.

B. Shop Drawings: Include plans, elevations, sections, details, and attachments to other work.
   1. Detail equipment assemblies and indicate dimensions, weights, loads, required clearances, method of field assembly, components, and location and size of each field connection.
   2. Wiring Diagrams: For power, signal, and control wiring.

C. Delegated-Design Submittal: For unit hangars and supports indicated to comply with performance requirements and design criteria, including analysis data signed and sealed by the qualified professional engineer responsible for their preparation.

1. Vibration Isolation Base Details: Detail fabrication including anchorages and attachments to structure and to supported equipment. Include adjustable motor bases, rails, and frames for equipment mounting.
2. Design Calculations: Calculate requirements for selecting vibration isolators and for designing vibration isolation bases.
3. Wind Restraints and Certification.

D. Manufacturer Wind Loading Qualification Certification: Submit certification that specified equipment will withstand wind forces identified in "Performance Requirements" Article, Division 7 and in Division 23 Section "Vibration and Seismic Controls for HVAC Piping and Equipment."

1. Basis for Certification: Indicate whether withstand certification is based on actual test of assembled components or on calculations.
2. Dimensioned Outline Drawings of Equipment Unit: Identify center of wind force and locate and describe mounting and anchorage provisions.
3. Detailed description of equipment anchorage devices on which the certification is based and their installation requirements.

1.5 INFORMATIONAL SUBMITTALS

A. Coordination Drawings: Reflected ceiling plans and other details, drawn to scale, on which the following items are shown and coordinated with each other, using input from Installers of the items involved:
1. Framing and support members relative to duct penetrations.
2. Ceiling suspension assembly members.
3. Size and location of initial access modules for acoustical tile.
4. Ceiling-mounted items including light fixtures, diffusers, grilles, speakers, sprinklers, access panels, and special moldings.
5. Roof framing and support members relative to duct penetrations.

B. Certified Compliance Statement and shop drawings from a licensed PE for IBC and TDI.
1. Sealed shop drawings showing installation instructions and attachment of equipment to curb, and curb to structure. Include quantity and type of restraining brackets/clips, screws, spacing, etc.
2. As a separate attachment provide sealed IBC and TDI compliant calculations for curbs and attachment.

C. Field quality-control reports.

1.6 CLOSEOUT SUBMITTALS

A. Operation and Maintenance Data: For power ventilators to include in emergency, operation, and maintenance manuals.

1.7 MAINTENANCE MATERIAL SUBMITTALS

A. Furnish extra materials that match products installed and that are packaged with protective covering for storage and identified with labels describing contents.
   1. Belts: One set for each belt-driven unit.

1.8 QUALITY ASSURANCE

A. Electrical Components, Devices, and Accessories: Listed and labeled as defined in NFPA 70, by a qualified testing agency, and marked for intended location and application.

B. AMCA Compliance: Fans shall have AMCA-Certified performance ratings and shall bear the AMCA-Certified Ratings Seal.

C. UL Standards: Power ventilators shall comply with UL 705. Power ventilators for use for restaurant kitchen exhaust shall also comply with UL 762.

D. Wind Ratings:
   1. The High Wind models have been analyzed and stamped by a state license P.E. to the ASCE 7-02 Standard which meets the IBC, Florida and Miami-Dade codes.
   2. Each High Wind model is subject to be certified by a third party to the ASTM E330 Static Pressure Difference Standard.
   3. All High Wind models have been analyzed using Computational Fluid Dynamics (CFD). The CFD simulates the flow of high speed (150MPH) winds over the surface of objects.
   4. The Finite Element Analysis (FEA) is the results from the CFD and it can accurately predict the stress, strain, and deflection resulting from high wind loads.

E. International Building Code and TDI Compliance: Licensed Professional Engineer shall certify that the listed items are designed for and will withstand wind speed for the location of the project, per the relevant edition of International Building Code, ASCE Std 7, Texas Department of Insurance requirements.
   1. Equipment curb/attachment for exterior and roof mounted equipment such as fans.
   2. Attachment of equipment to curb/pad.
   3. Attachment of curb/pad to building structure.

1.9 COORDINATION

A. Coordinate size and location of structural-steel support members.

B. Coordinate installation of roof curbs, equipment supports, and roof penetrations. These items are specified in Division 7 Section "Roof Accessories."

1.10 WARRANTY

A. General Warranty: The special warranty specified in this Article shall not deprive the Owner of other rights the Owner may have under other provisions of the Contract Documents and shall be in addition to, and run concurrent with, other warranties made by the Contractor under requirements of the Contract Documents.

B. Special Warranty: A written warranty, executed by Contractor and signed by manufacturer, agreeing to replace components that fail in materials and workmanship within the specified warranty period, provided manufacturer's written instructions for installation, operation, and maintenance have been followed.
   1. Warranty Period: One (1) year parts and labor for fan and motor, including all components, from date of Substantial Completion.

1.11 EXTRA MATERIALS

A. Furnish extra materials described below that match products installed and that are packaged with protective covering for storage and identified with labels describing contents.
   1. Belts: One set for each belt-driven unit.

PART 2 - PRODUCTS

2.1 MANUFACTURERS

A. HVAC Power Ventilators: ubject to compliance with requirements, provide products by one of the following:
   1. Loren Cook Company.
   2. Greenheck Fan Corp.
   3. New York Blower Company (The).
   4. Penn Ventilation.

2.2 CENTRIFUGAL ROOF VENTILATORS

A. Description: Direct- or belt-driven centrifugal fans consisting of housing, wheel, fan shaft, bearings, motor and disconnect switch, drive assembly, curb base, and accessories.

B. Housing: Removable, **spun-aluminum, dome top and outlet baffle**; square, one-piece, aluminum base with venturi inlet cone.
   1. Provide spun-aluminum discharge baffle, with rain drains.
   2. Hinged Subbase: Galvanized-steel hinged arrangement permitting service and maintenance.

C. Fan Wheels: Aluminum hub and wheel with backward-inclined blades.

D. Belt-Driven Drive Assembly: Resiliently mounted to housing, with the following features:
   1. Fan Shaft: Turned, ground, and polished steel; keyed to wheel hub.
   2. Shaft Bearings: Permanently lubricated, permanently sealed, self-aligning ball bearings.
   3. Pulleys: Cast-iron, adjustable-pitch motor pulley.
   4. Fan and motor isolated from exhaust airstream.

E. Accessories:
   1. Variable-Speed Controller: Solid-state control to reduce speed from 100 to less than 50 percent.

2. Disconnect Switch: Nonfusible type, with thermal-overload protection mounted **inside** fan housing, factory wired through an internal aluminum conduit.
3. Bird Screens: Removable, 1/2-inch mesh, stainless steel.
4. Dampers: Counterbalanced, parallel-blade, backdraft dampers mounted in curb base; factory set to close when fan stops.
5. Motorized Dampers for airflow 2000CFM and larger: Parallel-blade dampers mounted in curb base with electric actuator; wired to close when fan stops.
6. For two speed exhaust fans where noted, do NOT include integral disconnect switch. This will be provided by electrical. See schedules.
7. Explosion proof motors and spark resistant fans where indicated.
8. For two speed exhaust fans, coordinate disconnect switch with electrical.
9. See schedules.

F. Roof Curbs: Galvanized steel; mitered and welded corners; 1-1/2-inch- thick, rigid, fiberglass insulation adhered to inside walls; and 1-1/2-inch wood nailer. Size as required to suit roof opening and fan base.

2.3 ROOF MOUNTED EQUIPMENT

A. Wind Restraints: Metal brackets compatible with the curb and casing, painted to match RTU, used to anchor unit to the curb, and designed for loads at Project site.

B. Ecoat or Lorenized coating on all exposed fans, vent hoods and fan cabinets

2.4 MOTORS

A. Comply with NEMA designation, temperature rating, service factor, enclosure type, and efficiency requirements for motors specified in Section 230513 "Common Motor Requirements for HVAC Equipment."
1. Motor Sizes: Minimum size as indicated. If not indicated, large enough so driven load will not require motor to operate in service factor range above 1.0.

B. Enclosure Type: Totally enclosed, fan cooled.

2.5 SOURCE QUALITY CONTROL

A. Certify sound-power level ratings according to AMCA 301, "Methods for Calculating Fan Sound Ratings from Laboratory Test Data." Factory test fans according to AMCA 300, "Reverberant Room Method for Sound Testing of Fans." Label fans with the AMCA-Certified Ratings Seal.

B. Certify fan performance ratings, including flow rate, pressure, power, air density, speed of rotation, and efficiency by factory tests according to AMCA 210, "Laboratory Methods of Testing Fans for Aerodynamic Performance Rating." Label fans with the AMCA-Certified Ratings Seal.

PART 3 - EXECUTION

3.1 INSTALLATION

A. Install power ventilators level and plumb.

B. Secure roof-mounting fans to roof curbs with cadmium-plated hardware. Refer to Division 7 Section "Roof Accessories" for installation of roof curbs.

C. Ceiling Units: Suspend units from structure; use steel wire or metal straps.

D. Support suspended units from structure using threaded steel rods and spring hangers having a static deflection of 1 inch. Vibration-control devices are specified in Section 230548.13 "Vibration Controls for HVAC."

E. Install units with clearances for service and maintenance.

F. Label units according to requirements specified in Section 230553 "Identification for HVAC Piping and Equipment."

3.2 CONNECTIONS

A. Drawings indicate general arrangement of ducts and duct accessories. Make final duct connections with flexible connectors. Flexible connectors are specified in Section 233300 "Air Duct Accessories."

B. Install ducts adjacent to power ventilators to allow service and maintenance.

C. Ground equipment according to Section 260526 "Grounding and Bonding for Electrical Systems."

D. Connect wiring according to Section 260519 "Low-Voltage Electrical Power Conductors and Cables."

3.3 FIELD QUALITY CONTROL

A. Perform tests and inspections.
   1. Verify that shipping, blocking, and bracing are removed.
   2. Verify that unit is secure on mountings and supporting devices and that connections to ducts and electrical components are complete. Verify that proper thermal-overload protection is installed in motors, starters, and disconnect switches.
   3. Verify that cleaning and adjusting are complete.
   4. Disconnect fan drive from motor, verify proper motor rotation direction, and verify fan wheel free rotation and smooth bearing operation. Reconnect fan drive system, align and adjust belts, and install belt guards.
   5. Adjust belt tension.
   6. Adjust damper linkages for proper damper operation.
   7. Verify lubrication for bearings and other moving parts.

8. Verify that manual and automatic volume control and fire and smoke dampers in connected ductwork systems are in fully open position.
9. Disable automatic temperature-control operators, energize motor and adjust fan to indicated rpm, and measure and record motor voltage and amperage.
10. Shut unit down and reconnect automatic temperature-control operators.
11. Remove and replace malfunctioning units and retest as specified above.

B. Starting Procedures:
1. Energize motor and adjust fan to indicated rpm.
2. Measure and record motor voltage and amperage.

C. Operational Test: After electrical circuitry has been energized, start units to confirm proper motor rotation and unit operation. Remove malfunctioning units, replace with new units, and retest.

D. Test and adjust controls and safeties. Replace damaged and malfunctioning controls and equipment.

3.4 ADJUSTING

A. Adjust damper linkages for proper damper operation.

B. Adjust belt tension.

C. Comply with requirements in Section 230593 "Testing, Adjusting, and Balancing for HVAC" for testing, adjusting, and balancing procedures.

D. Replace fan and motor pulleys as required to achieve design airflow.

E. Lubricate bearings.

3.5 DEMONSTRATION

A. Train Owner's maintenance personnel to adjust, operate, and maintain power ventilators.
1. Train Owner's maintenance personnel on procedures and schedules for starting and stopping, troubleshooting, servicing, and maintaining equipment and schedules.
2. Review data in maintenance manuals. Refer to Division 1 Section "Operation and Maintenance Data."
3. Schedule training with Owner, through Engineer, with at least seven days' advance notice.

END OF SECTION 233423

SECTION 236423 - SCROLL WATER CHILLERS

PART 1 - GENERAL

1.1 RELATED DOCUMENTS

A. Drawings and general provisions of the Contract, including General and Supplementary Conditions and Division 01 Specification Sections, apply to this Section.

1.2 SUMMARY

A. Section Includes: Packaged, air-cooled, electric-motor-driven, scroll water chillers.

1.3 DEFINITIONS

A. COP: Coefficient of performance. The ratio of the rate of heat removal to the rate of energy input using consistent units for any given set of rating conditions.

B. DDC: Direct digital control.

C. EER: Energy-efficiency ratio. The ratio of the cooling capacity given in terms of Btu/h to the total power input given in terms of watts at any given set of rating conditions.

D. IPLV: Integrated part-load value. A single number part-load efficiency figure of merit calculated per the method defined by ARI 506/110 and referenced to ARI standard rating conditions.

E. kW/Ton: The ratio of total power input of the chiller in kilowatts to the net refrigerating capacity in tons at any given set of rating conditions.

F. NPLV: Nonstandard part-load value. A single number part-load efficiency figure of merit calculated per the method defined by ARI 506/110 and intended for operating conditions other than the ARI standard rating conditions.

1.4 ACTION SUBMITTALS

A. Product Data: Include refrigerant, rated capacities, operating characteristics, furnished specialties, and accessories.

1. Performance at ARI standard conditions and at conditions indicated.
2. Performance at ARI standard unloading conditions.
3. Minimum evaporator flow rate.
4. Refrigerant capacity of water chiller.
5. Oil capacity of water chiller.
6. Fluid capacity of evaporator.
7. Characteristics of safety relief valves.
8. Minimum entering condenser-air temperature

9. Performance at varying capacity with constant design entering condenser-air temperature. Repeat performance at varying capacity for different entering condenser-air temperatures from design to minimum in 10 deg F increments.

B. Shop Drawings: Complete set of manufacturer's prints of water chiller assemblies, control panels, sections and elevations, and unit isolation. Include the following:

1. Assembled unit dimensions.
2. Weight and load distribution.
3. Required clearances for maintenance and operation.
4. Size and location of piping and wiring connections.
5. Wiring Diagrams: For power, signal, and control wiring.

1.5 INFORMATIONAL SUBMITTALS

A. Coordination Drawings: Floor plans, drawn to scale, on which the following items are shown and coordinated with each other, using input from installers of the items involved:

1. Structural supports.
2. Piping roughing-in requirements.
3. Wiring roughing-in requirements, including spaces reserved for electrical equipment.
4. Access requirements, including working clearances for mechanical controls and electrical equipment, and tube pull and service clearances.

B. Certificates: For certification required in "Quality Assurance" Article.

C. Source quality-control test reports.

D. Startup service reports.

E. Warranty: Sample of special warranty.

1.6 CLOSEOUT SUBMITTALS

A. Operation and Maintenance Data: For each water chiller to include in emergency, operation, and maintenance manuals.

1.7 QUALITY ASSURANCE

A. ARI Certification: Certify chiller according to ARI 590 certification program.

B. ARI Rating: Rate water chiller performance according to requirements in ARI 506/110, "Water Chilling Packages Using the Vapor Compression Cycle."

C. ASHRAE Compliance: ASHRAE 15 for safety code for mechanical refrigeration.

D. ASHRAE/IESNA 90.1 Compliance: Applicable requirements in ASHRAE/IESNA 90.1, Section 6 - "Heating, Ventilating, and Air-Conditioning."

E. ASME Compliance: Fabricate and stamp water chiller heat exchangers to comply with ASME Boiler and Pressure Vessel Code.

F. Comply with NFPA 70.

1.8 DELIVERY, STORAGE, AND HANDLING

A. Ship water chillers from the factory fully charged with refrigerant and filled with oil.

B. Package water chiller for export shipping.

1.9 COORDINATION

A. Coordinate sizes and locations of concrete bases with actual equipment provided.

1.10 WARRANTY

A. The special warranty specified in this Article shall not deprive Owner of other rights Owner may have under other provisions of Contract Documents and shall be in addition to, and run concurrent with, other warranties made by Contractor under requirements of Contract Documents.

B. Special Warranty: Submit a written warranty signed by chiller manufacturer and Installer agreeing to furnish parts for compressor and motor failures within special warranty period.

1. Warranties shall include coverage for complete assembly including materials, labor, and refrigerant.
2. Delivery date will not be used as a basis for start of warranty period. Warranty period shall commence from date of chiller start-up. Provide Owner and Engineer with copy of field technician's start-up report, and with written notice of commencement of warranty period.
3. Related Damages and Losses: When correcting warranted Work that has failed, remove and replace other Work that has been damaged as a result of such failure or that must be removed and replaced to provide access for correction of warranted Work.
4. Reinstatement of Warranty:
5. When Work covered by a warranty has failed and been corrected by replacement or rebuilding, reinstate the warranty by written endorsement. The reinstated warranty shall be equal to the original warranty with an equitable adjustment for depreciation.
6. Replacement Cost: Upon determination that Work covered by a warranty has failed, replace or rebuild the Work to an acceptable condition complying with requirements of Contract Documents. The Contractor is responsible for the cost of replacing or rebuilding defective Work regardless of whether the Owner has benefited from use of the Work through a portion of its anticipated useful service life.
7. Rejection of Warranties: The Owner reserves the right to reject warranties and to limit selections to products with warranties not in conflict with requirements of the Contract Documents.

C. Submit a written warranty signed by chiller manufacturer and Installer agreeing to furnish parts for compressor and motor failures within special warranty period.

1. Warranty Period: Manufacturer's warranty, not less than FIVE YEARS (bumper-to-bumper) for entire chiller and pump package, including parts, and labor as provided by manufacturer, and replacement of refrigerant.

PART 2 - PRODUCTS

2.1 PACKAGED AIR-COOLED WATER CHILLERS

A. Manufacturers: Subject to compliance with requirements, provide products by one of the following:
1. Trane
2. Carrier
3. JCI / York.
4. Daikin

B. Description: Factory-assembled and run-tested water chiller complete with base and frame, condenser casing, compressors, compressor motors and motor controllers, evaporator, condenser coils, condenser fans and motors, electrical power, controls, and accessories.

C. Cabinet:

1. Base: Galvanized-steel base extending the perimeter of water chiller. Secure frame, compressors, and evaporator to base to provide a single-piece unit.
2. Frame: Rigid galvanized-steel frame secured to base and designed to support cabinet, condenser, control panel, and other chiller components not directly supported from base.
3. Casing: Galvanized steel.
4. Finish: Coat base, frame, and casing with a corrosion-resistant coating capable of withstanding a 500-hour salt-spray test according to ASTM B 117.
5. Sound-reduction package consisting of the following:

    a. Acoustic enclosure around compressors.
    b. Reduced-speed fans with acoustic treatment.
    c. Designed to reduce sound level without affecting performance.
    d. Any 3rd party items required to meet sound level in the schedule.

6. Security Package: Provide security grilles with fasteners for additional protection of compressors, evaporator, and condenser coils. Grilles shall be coated for corrosion resistance and shall be removable for service access.

D. Compressors:

1. Description: Positive-displacement direct drive with hermetically sealed casing.
2. Each compressor provided with suction and discharge service valves, crankcase oil heater, and suction strainer.
3. Operating Speed: Nominal 3600 rpm for 60-Hz applications.
4. Capacity Control: On-off compressor cycling.

5. Oil Lubrication System: Automatic pump with strainer, sight glass, filling connection, filter with magnetic plug, and initial oil charge.
6. Vibration Isolation: Mount individual compressors on vibration isolators.

E. Compressor Motors:

1. Hermetically sealed and cooled by refrigerant suction gas.
2. High-torque, two-pole induction type with inherent thermal-overload protection on each phase.

F. Compressor Motor Controllers:

1. Across the Line: NEMA ICS 2, Class A, full voltage, nonreversing.

G. Refrigeration:

1. Refrigerant: R-32. Classified as Safety Group A1 according to ASHRAE 34.
2. Refrigerant Compatibility: Parts exposed to refrigerants shall be fully compatible with refrigerants, and pressure components shall be rated for refrigerant pressures.
3. Refrigerant Circuit: Each circuit shall include a electronic-expansion valve, refrigerant charging connections, a hot-gas muffler, compressor suction and discharge shutoff valves, a liquid-line shutoff valve, a replaceable-core filter-dryer, a sight glass with moisture indicator, a liquid-line solenoid valve, and an insulated suction line.
4. Refrigerant Isolation: Factory install positive shutoff isolation valves in the compressor discharge line and the refrigerant liquid-line to allow the isolation and storage of the refrigerant charge in the chiller condenser.

H. Evaporator:

1. Brazed-plate or shell-and-tube design, as indicated.
2. Shell and Tube:

    a. Description: Direct-expansion, shell-and-tube design with fluid flowing through the shell and refrigerant flowing through the tubes within the shell.
    b. Code Compliance: Tested and stamped according to ASME Boiler and Pressure Vessel Code.
    c. Shell Material: Carbon steel.
    d. Shell Heads: Removable carbon-steel heads with multipass baffles designed to ensure positive oil return and located at each end of the tube bundle.
    e. Shell Nozzles: Fluid nozzles located along the side of the shell and terminated with mechanical-coupling end connections for connection to field piping.
    f. Tube Construction: Individually replaceable copper tubes with enhanced fin design, expanded into tube sheets.
    g. Chiller shall be capable of starting up with 95°F entering fluid temperature to the evaporator. Maximum water temperature that can be circulated with the Chiller not operating is 125°F.

3. Brazed Plate:

    a. Direct-expansion, single-pass, brazed-plate design.
    b. Type 316 stainless-steel construction.

c. Code Compliance: Tested and stamped according to ASME Boiler and Pressure Vessel Code.
d. Fluid Nozzles: Terminate with mechanical-coupling end connections for connection to field piping.

I. Air-Cooled Condenser:

1. Plate-fin coil with integral subcooling on each circuit, rated at 450 psig.

a. Construct coils of copper tubes mechanically bonded to aluminum fins or microchannel coils.
b. Hail Protection: Provide condenser coils with steel louvers, baffles, or hoods painted to match the chiller to protect against hail damage. Wire mesh type is not acceptable.
c. Coat coils with a baked epoxy corrosion-resistant coating after fabrication. Black-fin coating is not acceptable. Coil shall have minimum salt spray rating of 6,000+ hours when rated IAW ASTM-B117.
d. Chiller shall be capable of starting and running at outdoor ambient temperatures from 32ºF to 115ºF.

2. Fans: Direct-drive propeller type with statically and dynamically balanced fan blades, arranged for vertical air discharge.
3. Fan Motors: Totally enclosed air over (TEAO) enclosure, with permanently lubricated bearings, and having built-in overcurrent- and thermal-overload protection.
4. Fan Guards: Steel safety guards with corrosion-resistant coating.

J. Electrical Power:

1. Factory-installed and -wired switches, motor controllers, transformers, and other electrical devices necessary shall provide a single-point field power connection to water chiller.
2. House in a unit-mounted, NEMA 250, enclosure with hinged access door with lock and key or padlock and key.
3. Wiring shall be numbered and color-coded to match wiring diagram.
4. Install factory wiring outside of an enclosure in a raceway.
5. Field power interface shall be to heavy-duty, non-fused disconnect switch, provided by Div. 26.
6. Provide branch power circuit to each motor and to controls with one of the following disconnecting means:
   a. Motor-circuit protector (circuit breaker) with field-adjustable, short-circuit trip coordinated with motor locked-rotor amperes.
7. Provide each motor with overcurrent protection.
8. Overload relay sized according to UL 1995, or an integral component of water chiller control microprocessor.
9. Phase-Failure and Undervoltage: Solid-state sensing with adjustable settings.
10. Transformer: Unit-mounted transformer with primary and secondary fuses and sized with enough capacity to operate electrical load plus spare capacity.

a. Power unit-mounted controls.

11. Control Relays: Auxiliary and adjustable time-delay relays.
12. Indicate the following for water chiller electrical power supply:

    a. Current, phase to phase, for all three phases.
    b. Voltage, phase to phase and phase to neutral for all three phases.
    c. Three-phase real power (kilowatts).
    d. Three-phase reactive power (kilovolt amperes reactive).
    e. Power factor.
    f. Running log of total power versus time (kilowatt hours).
    g. Fault log, with time and date of each.

K. Controls:

1. Stand-alone, microprocessor based.
2. Enclosure: Share enclosure with electrical power devices or provide a separate enclosure of matching construction.
3. Operator Interface: Keypad or pressure-sensitive touch screen. Multiple-character, backlit, liquid-crystal display or light-emitting diodes. Display the following:

    a. Date and time.
    b. Operating or alarm status.
    c. Operating hours.
    d. Outside-air temperature if required for chilled-water reset.
    e. Temperature and pressure of operating set points.
    f. Entering and leaving temperatures of chilled water.
    g. Refrigerant pressures in evaporator and condenser.
    h. Saturation temperature in evaporator and condenser.
    i. No cooling load condition.
    j. Elapsed time meter (compressor run status).
    k. Pump status.
    l. Antirecycling timer status.
    m. Percent of maximum motor amperage.
    n. Current-limit set point.
    o. Number of compressor starts.

4. Control Functions:

    a. Manual or automatic startup and shutdown time schedule.
    b. Entering and leaving chilled-water temperatures, control set points, and motor load limit. Chilled-water leaving temperature shall be reset based on input from the BAS system.
    c. Current limit and demand limit.
    d. External water chiller emergency stop.
    e. Antirecycling timer.

5. Manual-Reset Safety Controls: The following conditions shall shut down water chiller and require manual reset:

    a. Low evaporator pressure or high condenser pressure.
    b. Low chilled-water temperature.
    c. Refrigerant high pressure.

d. High or low oil pressure.
e. High oil temperature.
f. Loss of chilled-water flow.
g. Control device failure.

6. Interface with DDC System for HVAC: DDC shall provide hardwired control points to monitor, control, and display water chiller status and alarms. In addition, provide BACnet gateway communications device allowing for chiller operating parameters and alarms with descriptions to be monitored via direct digital control system. Coordinate interface with DDC Contractor.
   a. Hardwired points: As a minimum, the system shall allow the following parameters to be monitored or controlled.
      1) Leaving chilled water temperature.
      2) Entering chilled water temperature.
      3) Percent running load amps on motor.
      4) Chiller compressor status.
      5) Proof of chilled water flow.
      6) Alarm status.
      7) Chiller enable / disable.
      8) Chilled water temperature setpoint.
      9) Demand limit setpoint.
      10) Chiller % load.
      11) Hot gas bypass status, if required
   b. BACnet points: As a minimum, the system shall allow the following parameters to be monitored.
      1) Alarm status and descriptions.
      2) Refrigerant temperatures (each circuit): saturation temp, suction temp
      3) Refrigerant pressure (each circuit): condensing, evaporating
      4) Compressor run time (each)
      5) And 10 other points that will be determined at a later date.

L. Insulation:

1. Material: Closed-cell, flexible elastomeric, thermal insulation complying with ASTM C 534, Type I, for tubular materials and Type II, for sheet materials.
2. Thickness: 1-1/2 inches minimum, rated for installation in hot humid climate.
3. Factory-applied insulation over cold surfaces of water chiller components.

   a. Adhesive: As recommended by insulation manufacturer and applied to 100 percent of insulation contact surface. Seal seams and joints.

4. Apply protective coating to exposed surfaces of insulation.

M. Factory-Installed Dual Pump Package: N/A

N. Accessories:

1. Factory-installed, thermal dispersion chilled-water flow switches.
2. Individual compressor suction and discharge pressure gages with shutoff valves for each refrigeration circuit.
3. Factory-furnished neoprene or spring isolators for field installation.

4. Strainers.

O. Capacities and Characteristics: See schedules.

2.2 SOURCE QUALITY CONTROL

A. Perform standard functional test of water chillers before shipping.

B. For water chillers located outdoors, rate sound power level according to ARI 370 procedure.

PART 3 - EXECUTION

3.1 EXAMINATION

A. Before water chiller installation, examine roughing-in for equipment support, anchor-bolt sizes and locations, piping, and electrical connections to verify actual locations, sizes, and other conditions affecting water chiller performance, maintenance, and operations.

1. Water chiller locations indicated on Drawings are approximate. Determine exact locations before roughing-in for piping and electrical connections.

B. Proceed with installation only after unsatisfactory conditions have been corrected.

3.2 WATER CHILLER INSTALLATION

A. Install water chillers on support structure indicated.

B. Equipment Mounting:

1. Install water chillers on cast-in-place concrete equipment bases. Comply with requirements for equipment bases and foundations specified in Section 033000 "Cast-in-Place Concrete."
2. Comply with requirements for vibration isolation devices specified in Section 230548.13 "Vibration Controls for HVAC."
3. Install dowel rods to connect concrete base to concrete floor. Unless otherwise indicated, install dowel rods on 18-inch centers around the full perimeter of concrete base.
4. For supported equipment, install epoxy-coated anchor bolts that extend through concrete base and anchor into structural concrete floor.
5. Place and secure anchorage devices. Use setting drawings, templates, diagrams, instructions, and directions furnished with items to be embedded.
6. Install anchor bolts to elevations required for proper attachment to supported equipment.

C. Maintain manufacturer's recommended clearances for service and maintenance.

D. Charge water chiller with refrigerant if not factory charged and fill with oil if not factory installed.

E. Install separate devices furnished by manufacturer and not factory installed.

3.3 CONNECTIONS

A. Comply with requirements in Section 232113 "Hydronic Piping" and Section 232116 Hydronic Piping Specialties." Drawings indicate general arrangement of piping, fittings, and specialties.

B. Install piping adjacent to chiller to allow service and maintenance.

C. Evaporator Fluid Connections: Connect to evaporator inlet with shutoff valve, strainer, flexible connector, thermometer, and plugged tee with pressure gage. Connect to evaporator outlet with shutoff valve, balancing valve, flexible connector, flow switch, thermometer, plugged tee with pressure gage, and drain connection with valve. Make connections to water chiller with a union, flange, or mechanical coupling.

D. Connect each drain connection with a union and drain pipe and extend pipe, full size of connection, to floor drain. Provide a shutoff valve at each connection if required.

E. Connect wiring and ground water chillers according to Division 26 Specifications.

F. Tighten electrical connectors and terminals according to manufacturer's published torque-tightening values. If manufacturer's torque values are not indicated, use those specified in UL 486A and UL 486B.

3.4 STARTUP SERVICE

A. Engage a factory-authorized service representative to perform startup service.

B. Inspect field-assembled components, equipment installation, and piping and electrical connections for proper assemblies, installations, and connections.

C. Complete installation and startup checks according to manufacturer's written instructions and perform the following:

1. Verify that refrigerant charge is sufficient and water chiller has been leak tested.
2. Verify that pumps are installed and functional.
3. Verify that thermometers and gages are installed.
4. Operate water chiller for run-in period.
5. Check bearing lubrication and oil levels.
6. Verify that refrigerant pressure relief device for chillers installed indoors is vented outside.
7. Verify proper motor rotation.
8. Verify static deflection of vibration isolators, including deflection during water chiller startup and shutdown.
9. Verify and record performance of chilled-water flow and low-temperature interlocks.
10. Verify and record performance of water chiller protection devices.
11. Test and adjust controls and safeties. Replace damaged or malfunctioning controls and equipment.

D. Prepare a written startup report that records results of tests and inspections.

3.5 DEMONSTRATION

A. Engage a factory-authorized service representative to train Owner's maintenance personnel to adjust, operate, and maintain water chillers. Video record the training sessions.

3.6 INSPECTION SERVICES

A. Engage a qualified manufacturer's service technician to perform chiller inspections at time intervals specified below.

1. Coordinate inspection time with Owner at least 5 working days prior to inspection. Schedule inspection at Owner's convenience.
2. Manufacturer's field technician must check in with Owner prior to beginning inspection. Review with Owner chiller logs and operational issues for problems and trends.
3. Manufacturer's field technician must check out with Owner after inspection.

B. Quarterly inspections: Manufacturer shall provide comprehensive inspection service of chiller at approximately three, six, and nine months after Substantial Completion. Quarterly inspections shall include, as a minimum, the following services:

1. Check the general operation of the unit.
2. Log the operating temperatures, pressures, voltages, and amperages.
3. Check the operation of the control circuit.
4. Check the operation of the motor and starter.
5. Analyze the recorded data. Compare the data to the original design conditions.
6. Review operating procedures with operating personnel.
7. Provide a written report of completed work, operating log, and indicate any uncorrected deficiencies detected.

C. End of First Year inspection: Manufacturer shall provide comprehensive inspection service of chiller at approximately twelve months after Substantial Completion. Inspection shall include, as a minimum, the following services:

1. General Assembly

    a. Leak-test the chiller and report the leak check results.
    b. Repair minor leaks as required (e.g. valve packing, flare nuts).
    c. Calculate refrigerant loss rate and report to customer.
    d. Visually inspect condenser tubes for cleanliness.

2. Controls and Safeties

    a. Inspect the control panel for cleanliness.
    b. Inspect wiring and connections for tightness and signs of overheating and discoloration.
    c. Verify all settings in the electronic control panel.
    d. Test the low oil pressure safety device. Calibrate and record setting.
    e. Test the high motor temperature safety device. Calibrate and record setting.
    f. Test the operation of the chilled water pump starter auxiliary contacts.
    g. Verify the setting of the current control device.

3. Lubrication System

    a. Pull oil sample for spectroscopic analysis.
    b. Test the oil for acid content and discoloration. Make recommendations to the customer based on the results of the test.
    c. Change the oil filter.
    d. Verify the operation of the oil heater. Measure amps and volts and compare the readings with the watt rating of the heater.

4. Motor and Starter

    a. Clean the starter and cabinet.
    b. Inspect wiring and connections for tightness and signs of overheating and discoloration.
    c. Check tightness of motor terminal connections.
    d. Check condition of the contacts for wear and pitting.
    e. Check contactors for free and smooth operation.
    f. Check the mechanical linkages for wear, security and clearances.
    g. Meg the motor and record the readings.
    h. Verify the operation of the electrical interlocks.
    i. Measure voltage and record. Voltage should be nominal voltage ±10%.

D. Provide all services, equipment, and materials required to remedy manufacturing or operational deficiencies found. Arrange for subsequent visit(s) if required. If routine maintenance is required, provide a report with recommendations to the Owner.

END OF SECTION 236423

SECTION 237313 - MODULAR CENTRAL-STATION AIR-HANDLING UNITS

PART 1 - GENERAL

1.1 RELATED DOCUMENTS

A. Drawings and general provisions of the Contract, including General and Supplementary Conditions and Division 01 Specification Sections, apply to this Section.

1.2 SUMMARY

A. Section Includes full 2" double wall, modular air-handling units with coils in the following configurations: Variable-air-volume, hydronic air-handling units in horizontal configurations, installed outdoors on new roof curbs to achieve windstorm certification.

1.3 PERFORMANCE REQUIREMENTS

A. Structural Performance: Casing panels shall be self-supporting and capable of withstanding 150 percent of internal static pressures indicated or 8 inch w.g. whichever is less, without panel joints exceeding a deflection of L/240 where "L" is the unsupported span length within completed casings.

B. Outdoor rated for outdoor rooftop mounting application that meets applicable windstorm ratings.

1.4 SUBMITTALS

A. Product Data: For each air-handling unit indicated.
   1. Unit dimensions and weight.
   2. Cabinet material, metal thickness, finishes, insulation, and accessories.
   3. Fans:
      a. AMCA 210 certified fan-performance curves with system operating conditions indicated.
      b. AMCA 301 certified fan-sound power ratings.
      c. Fan construction and accessories.
      d. Motor ratings, electrical characteristics, and motor accessories.
   4. Certified coil-performance ratings with system operating conditions indicated.
   5. Dampers, including housings, linkages, and operators.
   6. Filters with performance characteristics.

B. Coordination Drawings: Floor plans and other details, drawn to scale, on which the following items are shown and coordinated with each other, using input from installers of the items involved:
   1. Mechanical-room layout and relationships between components and adjacent structural and mechanical elements.
   2. Support location, type, and weight.

3. Field measurements.

C. Source quality-control reports.

D. Field quality-control reports.

E. Operation and Maintenance Data: For air-handling units to include in emergency, operation, and maintenance manuals.

1.5 QUALITY ASSURANCE

A. Electrical Components, Devices, and Accessories: Listed and labeled as defined in NFPA 70, by a qualified testing agency, and marked for intended location and application.

B. NFPA Compliance: Comply with NFPA 90A for design, fabrication, and installation of air-handling units and components.

C. ARI Certification: Air-handling units and their components shall be factory tested according to ARI 430, "Central-Station Air-Handling Units," and shall be listed and labeled by ARI.

D. ASHRAE Compliance: Applicable requirements in ASHRAE 62.1-2004, Section 5 - "Systems and Equipment" and Section 7 - "Construction and Startup."

E. ASHRAE/IESNA 90.1-2004 Compliance: Applicable requirements in ASHRAE/IESNA 90.1-2004, Section 6 - "Heating, Ventilating, and Air-Conditioning."

F. Comply with NFPA 70.

1.6 COORDINATION

A. Coordinate sizes and locations of roof curbs with actual equipment provided.

B. Coordinate sizes and locations of concrete bases with actual equipment provided.

C. Coordinate base size with condensate drain connection opening and requirements for condensate drain trap size.

D. Coordinate side of coil connections and access doors. Coordinate exact dimensions of custom openings for supply, return and fresh air. Coordinate dimensional limitations.

E. Since spatial constraints are an important consideration, coordinate site conditions, space availability for equipment, maintenance and NEC clearances, etc., prior to submitting bids.

1.7 WARRANTY

A. General Warranty: The special warranty specified in this Article shall not deprive the Owner of other rights the Owner may have under other provisions of the Contract Documents and shall be in addition to, and run concurrent with, other warranties made by the Contractor under requirements of the Contract Documents.

B. Special Warranty: A written warranty, executed by Contractor and signed by manufacturer, agreeing to replace components that fail in materials and workmanship within the specified warranty period, provided manufacturer's written instructions for installation, operation, and maintenance have been followed.
   1. Warranty Period: One year parts and labor from date of Substantial Completion. Labor warranty may be provided by manufacturer or installing contractor.

1.8 EXTRA MATERIALS

A. Furnish extra materials that match products installed and that are packaged with protective covering for storage and identified with labels describing contents.
   1. Filters: One set for each air-handling unit.

PART 2 - PRODUCTS

2.1 MANUFACTURERS

A. Manufacturers: Subject to compliance with requirements, provide products by one of the following:
   1. Carrier; Div. of United Technologies Corp.
   2. Daikin Applied.
   3. Johnson Controls/York
   4. Trane.

2.2 GENERAL REQUIREMENTS

A. Manufacturer shall clearly define any exceptions made to plans and specifications. Mechanical Contractor is responsible for expenses that occur due to exceptions made.

B. Carefully coordinate with Electrical, Mechanical, and Controls Contractors for items of work that required close integration.

C. Units shall be delivered prewired, bearing an approved label with all of the necessary identification marks, electrical data, and any necessary cautions as required by the National Electrical Code.

D. The entire unit shall be covered with a protective covering from time of shipment at factory until installed with structure protecting indoor air handling units. If at any time the protective covering is removed before installation, the equipment shall be thoroughly cleaned, internally and externally.

E. Unit shall be factory assembled central station air handler with a fan, motor and drive assembly, chilled water and hot water coils, access section, combination filter-mixing box section, control dampers and accessories, as indicated on schedules and details.

F. All unit sections shall be supplied with longitudinal 14-gage or heavier, galvanized steel structural perimeter base rails to serve as housekeeping rails when unit is installed. The

manufacturer at the factory shall install base rails. Perimeter lifting brackets shall be provided on each section. Slinging of units in place of lifting brackets is not acceptable.

G. Units shall ship in the fewest number of sections to meet project requirements. All section shall be individually flanged and gasketed to allow easy assembly and disassembly.

2.3 UNIT CASINGS

A. General Fabrication Requirements for Casings: Formed and reinforced double-wall insulated panels, fabricated to allow removal for access to internal parts and components, with joints between sections sealed. Units shall be weatherproofed and equipped for installation indoors or outdoors as scheduled.

1. Outside Casing: G90 galvanized steel, thickness as required to meet deflection limits. Outdoor units shall be painted and comply with 3000 hr salt spray rating when tested in accordance with ASTM B117. . Provide cross-broken roof caps to eliminate standing water, standing "C" cap over seam joints to provide a watertight seal, and drip shield on all sides and over doors.
2. Inside Casing: G90 galvanized steel, thickness as required to meet deflection limits, except Type 304 Stainless steel for **coil casing, bulkheads, mounting supports, and coil cabinet inner liner.**
3. Joints: All walls, roofs, and joints shall be of formed construction, with at least two breaks at each joint. Joints shall be secured by sheet metal screws or pop rivets. Wall and floor joints shall be broken in and roof joints broken out (exposed) for rigidity. All joints shall be caulked with a water-resistant sealant.
4. Base Rail: Casings shall be supported on formed galvanized steel channel or structural channel supports, designed and welded for low deflections. Base rail shall be continuous, with flanged connections at shipping splits. Mounting feet are not acceptable. Integral lifting lugs shall be provided for hoisting.
5. Airstream Surfaces: Surfaces in contact with the airstream shall comply with requirements in ASHRAE 62.1-2004.
6. Casing panel inner liners must not extend to the exterior of the unit or contact the exterior frame. A mid-span, no-through-metal, internal thermal break shall be provided for all unit casing panels.

B. Casing Insulation and Adhesive:

1. Materials: 2" thick nominal 3 lb/cu.ft. density acoustic insulation; Thermal Conductivity (k-Value): 0.26 at 75 deg F mean temperature. R-13 or higher.
2. Fire-Hazard Classification: Maximum flame-spread index of 25 and smoke-developed index of 50, when tested according to ASTM C 411.
3. Liner Adhesive: Comply with NFPA 90A or NFPA 90B and ASTM C 916.
4. Location and Application: Encased between outside and inside casing.
5. Unit shall be thermally broken to minimize conduction path from inside of unit to outside of unit.

C. Inspection and Access Panels and Access Doors: Access doors large enough for easy access to accommodate periodic maintenance and inspection. Same materials and finishes as cabinet, complete with hinges, latches, handles, and gaskets. Provide access panels and doors in the following locations:

1. Location: Access doors to fans and motors, filters, dampers and operators, coil section inspection and access section, electrical control panels, and as specified on unit drawings

2. Construction: Provide an extruded aluminum perimeter frame with steel sheets front and back (sheets shall match cabinet construction) and pressure inject with 2.2 lbs/cu.ft. of polyurethane foam to create a seamless rigid 2" double wall door with an insulating value of R13.
3. Thermal Resistance: Doors shall be designed to reduce thru metal for improved performance.
4. Gaskets: Design press fitted into the frame slots for easy field replacement.
5. Hardware: Each door is complete with a minimum of two stainless steel hinges and two lever lock handles. Handle hardware shall be designed to prevent unintended closure.
6. Access Panels: Lift out access panels either bolted or secured with two or more cam-lock fasteners must be provided in locations where non-regular access is required.
7. Access doors downstream of all the return air coil section.

D. Condensate Drain Pans: Formed sections of **stainless-steel** sheet complying with requirements in ASHRAE 62. Fabricate IAQ drain pans with slopes in three planes to collect condensate from cooling coils (including coil piping connections and return bends) and humidifiers when units are operating at maximum catalogued face velocity across cooling coil. To prevent moisture carryover, extend drain pan a minimum of 6" (preferably 12") past the leaving face of the cooling coil. Unit drain pan shall be a minimum of 3" deep to permit cleaning and inspection.

1. Double-Wall Construction (full 2" thick): Fill space between walls with NFPA 90A compliant insulation and seal moisture tight.
2. Drain Connections: One end of pan. Coordinate with drawing.
3. Units with stacked coils shall have a stainless steel intermediate drain pan with copper drop tubes to main pan to collect condensate from top coil.

E. Base Rail: Unit shall have a minimum 6" tall continuous base rail bolted or welded to the unit frame. Mounting feet are not acceptable.

F. Roof mounted air handling units shall be provided with new roof curbs. See Division 7 specifications for work related to roof, if required.

2.4 FAN SECTION

A. Fan-Section Construction: Plenum, airfoil, or forward curve type fan, wheel, fan shaft, bearings, motor, drive assembly, and support structure and equipped with formed-steel channel base for integral mounting of fan, motor, and casing panels. Mount fan with spring vibration isolation, a minimum of 2" deflection. Direct-driven centrifugal fans consisting of housing where specifically shown. Motor, fan bearings, and drive assembly shall be located inside the fan plenum to minimize bearing wear and to allow for internal vibration isolation of the fan-motor assembly.

B. Centrifugal Fan Housings: Formed- and reinforced-steel panels to form curved scroll housings with shaped cutoff and spun-metal inlet bell.
1. Bracing: Steel angle or channel supports for mounting and supporting fan scroll, wheel, motor, and accessories.
2. Horizontal-Flanged, Split Housing: Bolted construction.
3. Housing for Supply Fan: Attach housing to fan-section casing with metal-edged flexible duct connector, or a vibration absorbent discharge seal.

4. Flexible Connector: Factory fabricated with a fabric strip **5-3/4 inches** wide attached to 2 strips of 2-3/4-inch- wide, 0.028-inch- thick, galvanized-steel sheet or 0.032-inch- thick aluminum sheets; select metal compatible with casing.

    a. Flexible Connector Fabric: Glass fabric, double coated with neoprene. Fabrics, coatings, and adhesives shall comply with UL 181, Class 1.

        1) Fabric Minimum Weight: 26 oz./sq. yd.
        2) Fabric Tensile Strength: 480 lbf/inch in the warp and 360 lbf/inch in the filling.
        3) Fabric Service Temperature: Minus 40 to plus 200 deg F.

C. Fan and Drive Assemblies: Statically and dynamically balanced and designed for continuous operation at maximum-rated fan speed and motor horsepower.

1. Shafts: Designed for continuous operation at maximum-rated fan speed and motor horsepower, and with field-adjustable alignment.

    a. Turned, ground, and polished hot-rolled steel with keyway. Ship with a protective coating of lubricating oil.
    b. Designed to operate at no more than 70 percent of first critical speed at top of fan's speed range.

D. Airfoil, Centrifugal Fan Wheels: Smooth-curved inlet flange, backplate, and hollow die-formed airfoil-shaped blades continuously welded at tip flange and backplate; cast-iron or cast-steel hub riveted to backplate and fastened to shaft with set screws.

E. Grease-Lubricated Shaft Bearings: Self-aligning, pillow-block-type, ball or roller bearings with adapter mount and two-piece, cast-iron housing.
1. Ball-Bearing Rating Life: ABMA 9, L_{10} of 120,000 hours.
2. Roller-Bearing Rating Life: ABMA 11, L_{10} of 120,000 hours.

F. Belt Drives (where specified): Factory mounted, with final alignment and belt adjustment made after installation and with 1.5 service factor based on fan motor.
1. Pulleys: Cast iron or cast steel with split, tapered bushing; dynamically balanced at factory.
2. Motor Pulleys: Adjustable pitch for use with 5-hp motors and smaller; fixed pitch for use with motors larger than 5 hp. Select pulley so pitch adjustment is at the middle of adjustment range at fan design conditions.
3. Belts: Oil resistant, nonsparking, and nonstatic; matched for multiple belt drives.
4. Belt Guards: Comply with requirements specified by OSHA and fabricate according to SMACNA's "HVAC Duct Construction Standards"; 0.1046-inch- thick, 3/4-inch diamond-mesh wire screen, welded to steel angle frame; prime coated.
5. Motor Mount: Adjustable for belt tensioning.

G. Vibration Control: Vertical spring type isolators with leveling bolts, bridge bearing waffled pads with minimum 2 inch static deflection and side snubbers designed to achieve high isolation efficiency. Fans (other than plug fans) shall be attached to the discharge panel by a polyvinyl chloride coated polyester woven fabric, with a sealed double locking fabric to metal connection. Direct plenum fans provided with electronically commutated external- rotor motor with integrated control electronics shall be rigid mounted to the AHU.

H. Fan-Section Source Quality Control:
   1. Sound Power Level Ratings: Comply with AMCA 301, "Methods for Calculating Fan Sound Ratings from Laboratory Test Data." Test fans according to AMCA 300, "Reverberant Room Method for Sound Testing of Fans." Fans shall bear AMCA-certified sound ratings seal.
   2. Factory test fan performance for flow rate, pressure, power, air density, rotation speed, and efficiency. Establish ratings according to AMCA 210, "Laboratory Methods of Testing Fans for Rating."

2.5 MOTORS

A. General: Refer to Division 23 Section for general requirements for motors.

B. Torque Characteristics: Sufficient to accelerate driven loads satisfactorily.

C. Motor Sizes: Minimum size as indicated. If not indicated, large enough so driven load will not require motor to operate in service factor range.

D. Totally Enclosed Fan Cooled (TEFC), premium efficiency (E+3) type, NEMA Design B, inverter rated for Variable Speed Drive application, of size and electrical characteristics as shown on equipment schedule.

E. Temperature Rating: 50 deg C maximum temperature rise at 40 deg C ambient for continuous duty at full load (Class A Insulation).

F. Service Factor: 1.15 for polyphase motors and 1.35 for single-phase motors.

G. Motor Construction: NEMA MG 1, general purpose, continuous duty, Design B mounted on adjustable base.

H. Bearings: The following features are required:
   1. Ball or roller bearings with inner and outer shaft seals.
   2. Grease lubricated. Provide grease lines for motor and shaft lubrication, extended to a common mounting on access side of fan.
   3. Designed to resist thrust loading where belt or other drives produce lateral or axial thrust in motor.

I. Overload Protection: Built-in, automatically resetting, thermal-overload protection.

J. Noise Rating: Quiet.

K. Efficiency: Premium efficiency.

L. Suitable for use with variable speed drives.

M. Nameplate: Indicate ratings, characteristics, construction, special features, and full identification of manufacturer.

N. Starters, Electrical Devices, and Wiring: Electrical devices and connections are specified in Division 26 Sections.

2.6 COIL SECTION

A. Coil Sections: Common or individual, insulated, stainless-steel casings for cooling coils. Design and construct to facilitate removal and replacement of coil for maintenance and to ensure full airflow through coils.

B. Water Coils: Circuited to provide adequate tube velocities to meet design requirements. Internal turbulators are not acceptable. Continuous circuit coil fabricated according to ARI 410.
1. Piping Connections: Threaded, on same end.
2. Tubes: **5/8" outer diameter copper tubes, minimum .020" thick tubes and u-bends.**
3. Fins: Rippled for maximum heat transfer.
   a. Coils: Aluminum fins.
4. Fin and Tube Joint: Mechanical bond by mechanical expansion of tubes.
5. Headers: Seamless copper tube with brazed joints, prime coated.
6. Frames: Type 304 stainless steel, 16 gauge thick.
7. Mounting racks and bulkhead: Stainless steel.
8. Ratings: Design tested and rated according to ASHRAE 33 and ARI 410.
   a. Working-Pressure Ratings: 200 psig, 325 deg F.
9. Source Quality Control: Test to 300 psig underwater.

C. Coil casing shall be Type 304 stainless steel.

D. (DOAS ONLY) Coil shall have a dipped flexible epoxy polymer e-coat uniformly applied to all coil surface areas without material bridging between fins. Coating process shall ensure complete coil encapsulation and a uniform dry film thickness from 0.8 to 1.2 mil on all surface areas including fin edges. Corrosion durability shall be confirmed through testing to no less than 5,000 hours salt spray per ASTM B117.

E. Drain and Vent: All water coils shall be equipped with a capped vent tapping at the top of the return header, and a capped drain tapping at the bottom of the supply header. Extend drain and vent to unit exterior.

F. Auxiliary Drain: Return bends and headers of coils shall be fully concealed within the air-handling unit. Provide auxiliary drain pan complete with drain connection at headered end of cooling coils. Exterior header covers will not be acceptable.

G. Coil Removal: Coils shall be removable from the unit on the opposite side of header connections with access panel, unless shown otherwise on drawings.

H. Supply and return line connections shall be clearly labeled on the outside of the unit.

I. Electrical Heating Coils, Controls, and Accessories: Comply with UL 1995.
1. Electric heat of capacity, voltage and control specified provided as an integral part of the unit.
2. Casing Assembly: Galvanized-steel frame.
3. Heating Elements: Open-coil resistance wire of 80 percent nickel and 20 percent chromium supported and insulated by floating ceramic bushings recessed into casing openings, fastened to supporting brackets, and mounted in galvanized-steel frame.
4. Coils shall be machine crimped into stainless steel terminals, which are insulated with high temperature ceramic insulators.

5. Provide internal wiring of controls, contactors, etc. including 120 volt, 60 hertz control circuit transformer, automatic reset thermal cutout and fuses per NEC and UL (on heaters exceeding 48 amps).
6. Overtemperature Protection: Disk-type, automatically resetting, thermal-cutout, safety device; serviceable through terminal box without removing heater from duct or unit.
   a. Secondary Protection: Load-carrying, manually resetting or manually replaceable, thermal cutouts; factory wired in series with each heater stage.
7. Control Panel: **Unit** mounted with disconnecting means and overcurrent protection. Include the following controls:
   b. Magnetic contactor.
   c. Proportional electronic airflow sensor for proof of flow, independent of duct static pressure. Shall adjust heater capacity per available airflow
   d. Solid-state stepless pulse controller (SCR where noted).
   e. Time-delay relay.
   f. Pilot lights.
   g. Integral door interlock type disconnect switch.
   h. Line terminal block.

2.7 AIR FILTRATION

A. General Requirements for Air Filtration Section: Shall be a part of the combination filter mixing box section. See sections below.

1. Comply with NFPA 90A.
2. Provide minimum arrestance according to ASHRAE 52.1, and a minimum efficiency reporting value (MERV) according to ASHRAE 52.2.
3. Provide filter holding frames shall be constructed of extruded aluminum for increased rigidity arranged for flat or angular orientation, with access doors on both sides of unit. Filters shall be removable from one side or lifted out from access plenum.
4. Each filter section shall be designed and constructed to house 2-inch- thick, pleated, throwaway filters.

B. Extended-Surface, Nonsupported-Media Filters:
1. Factory-fabricated, dry, extended-surface, self-supporting type.
2. Arrestance (ASHRAE 52.1): **85**.
3. MERV (ASHRAE 52.2): **MERV 8 for DOAS**
4. MERV 8 Pre-Filter, and MERV 13 Post-Filter for other units.
5. Media: Fibrous material **with antimicrobial agent** constructed so individual pleats are maintained in tapered form by flexible internal supports under rated-airflow conditions.
6. Filter-Media Frame: **Galvanized steel for MERV 8 replaceable pad filters**.
7. Mounting Frames: Welded, galvanized steel, with gaskets and fasteners, suitable for bolting together into built-up filter banks**.**

2.8 DAMPERS

A. General Requirements for Dampers: Leakage rate, according to AMCA 500, "Laboratory Methods for Testing Dampers for Rating,".

B. Dampers: Ultra-low leak (ULL), double-skin, airfoil-blade aluminum dampers with compressible jamb seals and extruded-vinyl blade edge seals, in opposed-blade arrangement with steel operating rods rotating in stainless-steel sleeve bearings mounted in a single galvanized-steel frame, and with operating rods connected with a common linkage. Leakage rate shall not exceed 3.0 cfm/sq. ft. at 1-inch wg and 8 cfm/sq. ft. at 4-inch wg.

C. Mixing boxes and filter-mixing boxes shall have parallel blades. All mixing boxes and filter mixing boxes shall have access doors as specified on both sides.

D. Coordinate damper actuators on damper shafts with controls.

E. Damper Operators: Comply with requirements in Division 23 Section "Instrumentation and Control for HVAC."

F. Combination Filter and Mixing Section:

1. Cabinet support members shall hold 2-inch- thick, pleated, flat, permanent or throwaway filters. See Filter section above.
2. Support: **Permanent re-usable galvanized metal enclosing filter grid-frame** for MERV 8 pre-filters**.**

2.9 SPECIFIC FOR ROOF-MOUNTED UNITS

A. Roof curb: See Division 7 specifications.

B. Outside casing: G-60 galvanized steel with alkyd-enamel paint finish and with lifting lugs and knockouts for electrical and piping connections.

C. Base Rails: Channel iron rails for mounting on roof curb. Provide required mounting kits.

D. Outside Air Hood, where specified.

E. Service Doors:
1. Door construction shall be equal to or better than the panel construction (2" double wall with R13 insulation).

2.10 ACCESSORIES

A. See schedules.

2.11 CONTROLS

A. Air handler controls shall be achieved through dedicated DDC programmable control modules as specified in Section 230900. Each AHU shall have a dedicated controller capable of achieving control sequences in stand-alone mode.

B. AHU manufacturer shall coordinate with work of Section 230900 to ensure DDC system can fully interact with the AHU without compromising any of the system safeties or warranties.

2.12 SOURCE QUALITY CONTROL

A. Fan Sound-Power Level Ratings: Comply with AMCA 301, "Methods for Calculating Fan Sound Ratings from Laboratory Test Data." Test fans according to AMCA 300, "Reverberant Room Method for Sound Testing of Fans." Fans shall bear AMCA-certified sound ratings seal.

B. Fan Performance Rating: Factory test fan performance for airflow, pressure, power, air density, rotation speed, and efficiency. Rate performance according to AMCA 210, "Laboratory Methods of Testing Fans for Aerodynamic Performance Rating."

C. Water Coils: Factory tested to 300 psig according to ARI 410 and ASHRAE 33.

PART 3 - EXECUTION

3.1 EXAMINATION

A. Examine areas and conditions, with Installer present, for compliance with requirements for installation tolerances and other conditions affecting performance of the Work.

B. Examine casing insulation materials and filter media before air-handling unit installation. Reject insulation materials and filter media that are wet, moisture damaged, or mold damaged.

C. Examine roughing-in for hydronic or refrigerant, and condensate drainage piping systems and electrical services to verify actual locations of connections before installation.

D. Proceed with installation only after unsatisfactory conditions have been corrected.

E. Contractors providing units other than those used as the basis of design will assume all responsibility for changes required to accommodate units proposed.

F. Examine substrates, areas, and conditions, with Installer present, for compliance with requirements for installation tolerances and other conditions affecting installation of air handling units.

3.2 INSTALLATION

A. Install roof curb on roof structure, according to NRCA's "Low-Slope Membrane Roofing Construction Details Manual," Illustration "Raised Curb Detail for Rooftop Air Handling Units and Ducts." And ARI Guideline B. Install and secure rooftop replacement-air units on curbs and coordinate roof penetrations and flashing with roof construction.

B. See requirements regarding windstorm ratings and certification.

C. Arrange installation of units to provide access space around air-handling units for service and maintenance.

D. Do not operate fan system until filters (temporary or permanent) are in place. Replace temporary filters used during construction and testing, with new, clean filters.

3.3 CONNECTIONS

A. Comply with requirements for piping specified in other Division 23 Sections. Drawings indicate general arrangement of piping, fittings, and specialties.

B. Install piping adjacent to air-handling unit to allow service and maintenance.

C. Connect piping to air-handling units mounted on vibration isolators with flexible connectors.

D. Connect condensate drain pans using line size, Type M copper tubing. Extend to nearest equipment or floor drain. Construct deep trap at connection to drain pan and install cleanouts at changes in direction. Insulate condensate lines.

E. Hydronic Piping: Comply with applicable requirements in Division 23 Section "Hydronic Piping." and Section 232116 Hydronic Piping Specialties." Connect to supply and return coil tappings with shutoff or balancing valve and union or flange at each connection.

F. Connect duct to air-handling units with flexible connections. Comply with requirements in Division 23 Section "Air Duct Accessories." Drawings indicate general arrangement of ducts and duct accessories. Make final duct connections with flexible connections.

G. Electrical: Comply with applicable requirements in Division 26 Sections for power wiring, switches, and motor controls.

H. Ground equipment according to Division 26 Section "Grounding and Bonding."

I. Tighten electrical connectors and terminals according to manufacturer's published torque-tightening values. If manufacturer's torque values are not indicated, use those specified in UL 486A and UL 486B.

J. Electrical and controls conduit connections at the AHUs: Seal the annulus of the conduit with fire-proof, air and water tight sealant to prevent air and condensate flow into or out of the AHU and FCU.

3.4 FIELD QUALITY CONTROL

A. Manufacturer's Field Service: Engage a factory-authorized service representative to inspect, test, and adjust components, assemblies, and equipment installations, including connections.
   1. Inspect field assembly of components and installation of central-station air-handling units including piping, ductwork, and electrical connections.
   2. Prepare a written report on findings and recommended corrective actions.

B. Tests and Inspections:

   1. Leak Test: After installation, test coils and connections for leaks.
   2. Fan Operational Test: After electrical circuitry has been energized, start units to confirm proper motor rotation and unit operation.
   3. Test and adjust controls and safeties. Replace damaged and malfunctioning controls and equipment.

C. Air-handling unit or components will be considered defective if unit or components do not pass tests and inspections.

D. Prepare test and inspection reports.

3.5 STARTUP SERVICE

A. **Perform** startup service.
1. Complete installation and startup checks according to manufacturer's written instructions.
2. Verify that shipping, blocking, and bracing are removed.
3. Verify that unit is secure on mountings and supporting devices and that connections to piping, ducts, and electrical systems are complete. Verify that proper thermal-overload protection is installed in motors, controllers, and switches.
4. Verify proper motor rotation direction, free fan wheel rotation, and smooth bearing operations. Reconnect fan drive system, align belts, and install belt guards.
5. Verify that bearings, pulleys, belts, and other moving parts are lubricated with factory-recommended lubricants.
6. Verify that outdoor- and return-air mixing dampers open and close, and maintain minimum outdoor-air setting.
7. Comb coil fins for parallel orientation.
8. Verify that proper thermal-overload protection is installed for electric coils.
9. Install new, clean filters.
10. Verify that manual and automatic volume control and fire and smoke dampers in connected duct systems are in fully open position.

B. Starting procedures for air-handling units include the following:
1. Energize motor; verify proper operation of motor, drive system, and fan wheel. Adjust fan to indicated rpm. Replace fan and motor pulleys as required to achieve design conditions.
2. Measure and record motor electrical values for voltage and amperage.
3. Manually operate dampers from fully closed to fully open position and record fan performance.

C. Refer to Division 23 Section "Testing, Adjusting, and Balancing" for modular indoor air-handling system testing, adjusting, and balancing.

3.6 ADJUSTING

A. Adjust damper linkages for proper damper operation.

B. Comply with requirements in Division 23 Section "Testing, Adjusting, and Balancing for HVAC" for air-handling system testing, adjusting, and balancing.

3.7 CLEANING

A. Clean modular indoor air-handling units internally, on completion of installation, according to manufacturer's written instructions. Clean fan interiors to remove foreign material and construction dirt and dust. Vacuum clean fan wheels, cabinets, and coils entering air face.

B. After completing system installation and testing, adjusting, and balancing air-handling unit and air-distribution systems and after completing startup service, clean air-handling units internally to remove foreign material and construction dirt and dust. Clean fan wheels, cabinets, dampers, coils, and filter housings, and install new, clean filters.

3.8 DEMONSTRATION

A. **Train** Owner's maintenance personnel to adjust, operate, and maintain air-handling units.

END OF SECTION 237313

SECTION 260010 - SUMMARY OF ELECTRICAL WORK

PART 1 - GENERAL

1.1 RELATED DOCUMENTS

A. Drawings and general provisions of the Contract, including General and Supplementary Conditions, Division 1 Specification Sections and other Division 26 Specification Sections, apply to this Section.

1.2 WORK COVERED BY CONTRACT DOCUMENTS

A. The following Summary of Work is intended as an aid to achieve an understanding of the various elements of work included in the project, as is not intended to be all-inclusive. Detailed descriptions of work and requirements are given in drawings and specifications.

B. Scope of Work:

1. General: The "HVAC Upgrades at Brownsville Animal Regulation and Care Facility" consists of an existing single-story building, approximate 13,800 s.f. This building will generally be operated from 8:00am to 5:00pm. (Monday through Friday) with occasional after hours and weekends use.
2. Electrical: Provide all materials and labor associated with complete operational electrical distribution system. Major items of work include, but are not limited to:

(a) Electrical service:

(i) Provide a new underground electrical service; it shall consist of underground electrical raceways and concrete pad for Utility furnished pad mounted transformer.

(ii) Utility company shall provide medium voltage conductors and pad transformer.

(b) Demolition: Disconnect and remove existing panelboards and HVAC equipment as noted on drawings.

(c) Exterior Lighting systems: Provide LED type, see light fixture schedule and specifications.

(d) Power Systems: Provide miscellaneous duplex receptacles and power for H.V.A.C. and equipment.

(e) Commissioning: Provide for the lighting equipment and lighting controls as required per IECC 2018.

(f) Voice and Data Communication Cabling Equipment: Provide cabling and connectors for end to end connectivity.

1.3 ALLOWANCES

A. Electrical: See Division 1 for electrical allowances.

1.4 COORDINATION

A. All electrical work shall be done under sub-contract to a General Contractor, who ultimately responsible for the entire project. Electrical Contractor shall coordinate all work through General Contractor, even in areas where only electrical work is to take place.

B. All questions, requests for information, submittals, and correspondence from the Electrical Contractor shall be submitted via the General Contractor, who will forward to the Engineer, who will then forward to the Engineer.

C. Electrical Contractor shall not make any changes to design without written authorization from the Engineer. If changes are requested by the Owner, Engineer, General Contractor, Suppliers, Manufacturers, or any others, Contractor should issue a written RFI for response by the Engineer.

D. Electrical Contractor shall issue seven (7) days written notice prior to any activities that require the presence of the Engineer at the job-site. This applies to all inspections required by specifications, and particularly to those where work will be covered (underground raceways, electrical raceways above ceiling).

E. Cooperate fully with other contractors so that work under those contracts may be carried out smoothly, without interfering with or delaying work under this Contract.

F. Fully coordinate with Mechanical Contractor for providing power to HVAC equipment.

G. Issue written notification of the following tasks and allow five (5) days for Engineer to respond and schedule an inspection as required:

1. Upon completion of underground raceways installation and prior to covering up.
2. Upon completion of installing all raceways, labeling all j-boxes and prior to suspended ceiling installation.
3. Upon completion of pulling all wiring, making all terminations, labeling and color-coding wires at the panelboards/switchboards and prior to installing their covers.
4. When ready to request manufacturer's start-up of each piece of equipment.
5. When ready to conduct complete Fire Alarm, and Intrusion Detection demonstration.
6. When ready for Substantial Completion Inspection.
7. When ready for Final Inspection.

H. Failure to issue written notification may result in work having to be redone to allow for proper inspection. It is this contractor's responsibility to make sure Engineer receives notification.

1.5 UTILITIES

1. Coordinate with power, water, telephone, cable and gas utilities to locate all utilities prior to digging in any area.
2. Obtain any approvals required from utilities to relocate utilities.
3. Cost of relocating or bypassing utilities indicated on drawings shall be included in Base Bid.
4. Coordinate with utility for electrical service. Base bid shall include all costs associated with service connection, including permit fees.

1.6 CONTRACTOR USE OF PREMISES

A. Use of the Site: Limit use of the premises to work in areas indicated. Confine operations to areas within contract limits indicated. Do not disturb portions of the site beyond the areas in which the Work is indicated.

1. Owner Occupancy: Allow for Owner occupancy and use by the public.
2. Driveways and Entrances: Keep driveways and entrances serving the premises, clear and available to the Owner, the Owner's employees, and emergency vehicles at all time. Do not use these areas for parking or storage of materials. Schedule deliveries to minimize space and time requirements for storage of materials and equipment on-site.

B. Site Safety: Take every precaution to ensure the site does not present a threat to the safety of occupants and/or workers. Minimal safety requirements include, but are not limited to the following:

1. Temporary fencing around construction areas.
2. Yellow caution tape and construction barricades along open trenches during the day. Trenches shall be covered at night and warning lights provided on construction barricades.
3. Temporary fencing around equipment while site work is in progress.

C. Work shall take place with minimal disruption to Owner's operations in areas surrounding the job site.

1.7 SUBMITTALS - Special Requirements

A. All submittals need to comply with submittal requirements as outlined on this Pre-Construction Meeting Agenda & specifications.

B. Electrical Submittals shall be submitted electronically. Please organize the files as noted below (Native PDF format & searchable format). Files would need to be properly identified (cover letter, stamped, etc.) from the general contractor.

C. All submittals to be separated by sections and identified by section #s, in native and searchable pdf format. All selections/markings or highlighting made on the submittal shall be specific for project requirements and exactly for what the Contractor is intending to provide on the project. If submittal does not specify as to which model/options will be used by highlighting or marking the submittal, then submittal will be returned as rejected.

D. Manufacturer's standard dimensioned drawings, performance and product data shall be edited to delete reference to equipment, features, or information which is not applicable to the equipment being supplied for this project. Including Bill or List of Materials.

E. Individual submittals shall not be reviewed until a complete package is received.

F. Allow two weeks for initial review by Engineer, from the day it is received.

G. After being released by GC, Subcontractor shall have one week to respond to our submittal/re-submittal review comments.

H. Allow one week for review of resubmittals by Engineer, from the day it is received.

I. All submittal review comments shall be forwarded by Engineer who will then distribute as per Division 1.

J. Provide detailed coordination drawings showing how mechanical, electrical & plumbing system components will be installed in coordination with work by others. Engineer's drawing files will be made available to Contractor for producing coordination and as-built drawings upon request.

1. Miscellaneous Electrical – Submittal #1
- a. 260519 Low-Voltage Electrical Power Conductors and Cables
- b. 260526 Grounding and Bonding for Electrical Systems
- c. 260529 Hangers and Supports for Electrical Systems
- d. 260533 Raceways and Boxes for Electrical Systems
- e. 260544 Sleeves and Sleeve Seals for Electrical Raceways and Cabling
- f. 260553 Identification for Electrical Systems
- g. 262726 Wiring Devices

2. Electrical Gear Submittal #2
- a. 262200 Low Voltage Transformers
- b. 262413 Switchboards
- c. 262416 Panelboards
- d. 262713 Electricity Metering
- e. 262816 Enclosed Switches and Circuit Breakers

3. Light Fixtures Submittal #3
- a. 265621 Exterior Lighting

4. Electrical Commissioning Submittal #4
- a. 260800 Commissioning for Electrical Systems

1.8 SCHEDULE OF VALUES -Special Requirements

A. Electrical Contractor shall submit a Schedule of Values reflecting the total value of Electrical Work in the Contract and broken down into the following items as a minimum, with a line item for Materials/Equipment and another for Labor.

ELECTRICAL
1. Electrical Gear.
2. Raceways Including Wiring.
3. Light fixtures.
4. Wiring Devices.
5. Data Cabling
6. Commissioning
7. Allowances.
8. Miscellaneous.
9. Administrative and project management.

1.9 CODE COMPLIANCE:

The design for this project is based on:

SECTION 260010 - SUMMARY OF ELECTRICAL WORK

1. Occupational Safety and Health Act (OSHA)
2. National Electric Code (NEC)
3. National Fire Code
4. International Building Code
5. UL 916
6. Local ordinances

END OF SECTION 260010

SECTION 260519 - LOW-VOLTAGE ELECTRICAL POWER CONDUCTORS AND CABLES

PART 1 - GENERAL

1.1 RELATED DOCUMENTS

A. Drawings and general provisions of the Contract, including General and Supplementary Conditions and Division 01 Specification Sections, apply to this Section.

1.2 SUMMARY

A. Section Includes:

1. Building wires and cables rated 600 V and less.
2. Connectors, splices, and terminations rated 600 V and less.

1.3 ACTION SUBMITTALS

A. Product Data: For each type of product.

1.4 INFORMATIONAL SUBMITTALS

A. Qualification Data: For testing agency.

B. Field quality-control reports.

1.5 QUALITY ASSURANCE

A. Testing Agency Qualifications: Member Company of NETA or an NRTL.

PART 2 - PRODUCTS

2.1 CONDUCTORS AND CABLES

A. Manufacturer:

1. Senator Wire & Cable Company.
2. Southwire Company.
3. Encore Wire

B. Copper Conductors: Comply with NEMA WC 70/ICEA S-95-658.

C. Conductor Insulation: Comply with NEMA WC 70/ICEA S-95-658 for Type THHN/THWN-2, Type XHHW-2 and Type SO.

D. Multiconductor Cable: Comply with UL 1569 and NEMA WC 70/ICEA S-95-658 for metal-clad cable, Type MC and Type SO with ground wire.

2.2 CONNECTORS AND SPLICES

A. Manufacturers:

1. AFC Cable Systems, Inc.
2. AMP Incorporated/Tyco International.
3. Hubbell/Anderson.
4. O-Z/Gedney; EGS Electrical Group LLC.
5. 3M Company; Electrical Products Division.

B. Description: Factory-fabricated connectors and splices of size, ampacity rating, material, type, and class for application and service indicated.

2.3 SYSTEM DESCRIPTION

A. Electrical Components, Devices, and Accessories: Listed and labeled as defined in NFPA 70, by a qualified testing agency, and marked for intended location and application.

B. Comply with NFPA 70.

PART 3 - EXECUTION

3.1 CONDUCTOR MATERIAL APPLICATIONS

A. Feeders: Copper stranded.

B. Branch Circuits: Copper stranded, except VFC cable, which shall be extra flexible stranded.

3.2 CONDUCTOR INSULATION AND MULTICONDUCTOR CABLE APPLICATIONS AND WIRING METHODS

A. Exposed Feeders: Type THHN/THWN-2, single conductors in raceway.

B. Feeders Concealed in Ceilings, Walls and Partitions: Type THHN/THWN-2, single conductors in raceway.

C. Feeders Concealed in Concrete, below Slabs-on-Grade, and underground: Type THHN/THWN-2, single conductors in raceway.

D. Exposed Branch Circuits: Type THHN/THWN-2, single conductors in raceway.

E. Branch Circuits Concealed in Ceilings, Walls, and Partitions: Type THHN/THWN-2, single conductors in raceway.

F. Branch Circuits Concealed in Concrete, below Slabs-on-Grade, and underground: Type THHN/THWN-2, single conductors in raceway.

3.3 INSTALLATION OF CONDUCTORS AND CABLES

A. Conceal cables in finished walls, ceilings, and floors unless otherwise indicated.

B. Complete raceway installation between conductor and cable termination points according to Section 260533 "Raceways and Boxes for Electrical Systems" prior to pulling conductors and cables.

C. Use manufacturer-approved pulling compound or lubricant where necessary; compound used must not deteriorate conductor or insulation. Do not exceed manufacturer's recommended maximum pulling tensions and sidewall pressure values.

D. Use pulling means, including fish tape, cable, rope, and basket-weave wire/cable grips, which will not damage cables or raceway.

E. Install exposed cables parallel and perpendicular to surfaces of exposed structural members, and follow surface contours where possible.

F. Support cables according to Section 260529 "Hangers and Supports for Electrical Systems."

3.4 CONNECTIONS

A. Tighten electrical connectors and terminals according to manufacturer's published torque-tightening values. If manufacturer's torque values are not indicated, use those specified in UL 486A-486B.

B. Make splices, terminations, and taps that are compatible with conductor material and that possess equivalent or better mechanical strength and insulation ratings than unspliced conductors.

1. Use oxide inhibitor in each splice, termination, and tap for aluminum conductors.

C. Wiring at Outlets: Install conductor at each outlet, with at least 6 inches of slack.

3.5 IDENTIFICATION

A. Identify and color-code conductors and cables according to Section 260553 "Identification for Electrical Systems."

B. Identify each spare conductor at each end with identity number and location of other end of conductor, and identify as spare conductor.

3.6 SLEEVE AND SLEEVE-SEAL INSTALLATION FOR ELECTRICAL PENETRATIONS

A. Install sleeves and sleeve seals at penetrations of exterior floor and wall assemblies. Comply with requirements in Section 260544 "Sleeves and Sleeve Seals for Electrical Raceways and Cabling."

3.7 FIRESTOPPING

A. Apply firestopping to electrical penetrations of fire-rated floor and wall assemblies to restore original fire-resistance rating of assembly according to Section 078413 "Penetration Firestopping."

3.8 FIELD QUALITY CONTROL

A. Perform the following tests and inspections:

1. After installing conductors and cables and before electrical circuitry has been energized, test service entrance and feeder conductors for compliance with requirements.

2. Perform each visual and mechanical inspection and electrical test stated in NETA Acceptance Testing Specification. Certify compliance with test parameters.
3. Infrared Scanning: After Substantial Completion, but not more than 60 days after Final Acceptance, perform an infrared scan of each splice in conductors No. 3 AWG and larger. Remove box and equipment covers so splices are accessible to portable scanner. Correct deficiencies determined during the scan.

    a. Follow-up Infrared Scanning: Perform an additional follow-up infrared scan of each splice 11 months after date of Substantial Completion.
    b. Instrument: Use an infrared scanning device designed to measure temperature or to detect significant deviations from normal values. Provide calibration record for device.
    c. Record of Infrared Scanning: Prepare a certified report that identifies splices checked and that describes scanning results. Include notation of deficiencies detected, remedial action taken, and observations after remedial action.

B. Test and Inspection Reports: Prepare a written report to record the following:

1. Procedures used.
2. Results that comply with requirements.
3. Results that do not comply with requirements and corrective action taken to achieve compliance with requirements.

C. Cables will be considered defective if they do not pass tests and inspections.

END OF SECTION 260519

SECTION 260526 - GROUNDING AND BONDING FOR ELECTRICAL SYSTEMS

PART 1 - GENERAL

1.1 RELATED DOCUMENTS

A. Drawings and general provisions of the Contract, including General and Supplementary Conditions and Division 01 Specification Sections, apply to this Section.

1.2 SUMMARY

A. Section includes grounding and bonding systems and equipment.

1.3 ACTION SUBMITTALS

A. Product Data: For each type of product indicated.

1.4 INFORMATIONAL SUBMITTALS

A. As-Built Data: Plans showing dimensioned as-built locations of grounding features specified in "Field Quality Control" Article.

B. Field quality-control reports.

1.5 CLOSEOUT SUBMITTALS

A. Operation and Maintenance Data: For grounding to include in emergency, operation, and maintenance manuals.

1. In addition to items specified in Section "Operation and Maintenance Data," include the following:

a. Instructions for periodic testing and inspection of grounding features at ground rings and grounding connections for separately derived systems based on and NFPA 70B.

1.6 QUALITY ASSURANCE

A. Electrical Components, Devices, and Accessories: Listed and labeled as defined in NFPA 70, by a qualified testing agency, and marked for intended location and application.

B. Comply with UL 467 for grounding and bonding materials and equipment.

PART 2 - PRODUCTS

2.1 CONDUCTORS

A. Insulated Conductors: tinned-copper wire or cable insulated for 600 V unless otherwise required by applicable Code or authorities having jurisdiction.

B. Bare Copper Conductors:

1. Solid Conductors: ASTM B 3.
2. Stranded Conductors: ASTM B 8.
3. Tinned Conductors: ASTM B 33.
4. Bonding Cable: 28 kcmil, 14 strands of No. 17 AWG conductor, 1/4 inch in diameter.
5. Bonding Conductor: No. 4 or No. 6 AWG, stranded conductor.
6. Bonding Jumper: Copper tape, braided conductors terminated with copper ferrules; 1-5/8 inches wide and 1/16 inch thick.
7. Tinned Bonding Jumper: Tinned-copper tape, braided conductors terminated with copper ferrules; 1-5/8 inches wide and 1/16 inch thick.

2.2 CONNECTORS

A. Listed and labeled by an NRTL acceptable to authorities having jurisdiction for applications in which used and for specific types, sizes, and combinations of conductors and other items connected.

B. Bolted Connectors for Conductors and Pipes: Copper or copper alloy.

C. Welded Connectors: Exothermic-welding kits of types recommended by kit manufacturer for materials being joined and installation conditions.

D. Bus-Bar Connectors: Mechanical type, cast silicon bronze, solderless **exothermic**-type wire terminals, and long-barrel, two-bolt connection to ground bus bar.

2.3 GROUNDING ELECTRODES

A. Ground Rods: Copper-clad; 3/4 inch by 10 feet.

PART 3 - EXECUTION

3.1 APPLICATIONS

A. Conductors: Install solid conductor for No. 10 AWG and smaller, and stranded conductors for No. 8 AWG and larger unless otherwise indicated.

B. Underground Grounding Conductors: Install bare tinned copper conductor, No. 2/0 AWG minimum.

1. Bury at least 24 inches below grade.
2. Duct-Bank Grounding Conductor: Bury 12 inches above duct bank when indicated as part of duct-bank installation.

C. Conductor Terminations and Connections:

1. Pipe and Equipment Grounding Conductor Terminations: Bolted connectors.
2. Underground Connections: Welded connectors except at test wells and as otherwise indicated.
3. Connections to Ground Rods at Test Wells: Bolted connectors.
4. Connections to Structural Steel: Welded connectors.

3.2 GROUNDING AT THE SERVICE

A. Equipment grounding conductors and grounding electrode conductors shall be connected to the ground bus. Install a main bonding jumper between the neutral and ground buses.

3.3 GROUNDING UNDERGROUND DISTRIBUTION SYSTEM COMPONENTS

A. Comply with IEEE C2 grounding requirements.

B. Pad-Mounted Transformers and Switches: Install two ground rods and ground ring around the pad. Ground pad-mounted equipment and noncurrent-carrying metal items associated with substations by connecting them to underground cable and grounding electrodes. Install tinned-copper conductor not less than No. 2 AWG for ground ring and for taps to equipment grounding terminals. Bury ground ring not less than 6 inches from the foundation.

3.4 EQUIPMENT GROUNDING

A. Install insulated equipment grounding conductors with all feeders and branch circuits.

B. Install insulated equipment grounding conductors with the following items, in addition to those required by NFPA 70:

1. Feeders and branch circuits.
2. Lighting circuits.
3. Receptacle circuits.
4. Single-phase motor and appliance branch circuits.
5. Three-phase motor and appliance branch circuits.
6. Flexible raceway runs.
7. Metal-clad cable runs.
8. Busway Supply Circuits: Install insulated equipment grounding conductor from grounding bus in the switchgear, switchboard, or distribution panel to equipment grounding bar terminal on busway.

3.5 INSTALLATION

A. Grounding Conductors: Route along shortest and straightest paths possible unless otherwise indicated or required by Code. Avoid obstructing access or placing conductors where they may be subjected to strain, impact, or damage.

B. Ground Rods: Drive rods until tops are 2 inches below finished floor or final grade unless otherwise indicated.

1. Interconnect ground rods with grounding electrode conductor below grade and as otherwise indicated. Make connections without exposing steel or damaging coating if any.
2. For grounding electrode system, install at least three rods spaced at least one-rod length from each other and located at least the same distance from other grounding electrodes, and connect to the service grounding electrode conductor.

C. Bonding Straps and Jumpers: Install in locations accessible for inspection and maintenance except where routed through short lengths of conduit.

1. Bonding to Structure: Bond straps directly to basic structure, taking care not to penetrate any adjacent parts.
2. Bonding to Equipment Mounted on Vibration Isolation Hangers and Supports: Install bonding so vibration is not transmitted to rigidly mounted equipment.
3. Use exothermic-welded connectors for outdoor locations; if a disconnect-type connection is required, use a bolted clamp.

D. Grounding and Bonding for Piping:

1. Metal Water Service Pipe: Install insulated copper grounding conductors, in conduit, from building's main service equipment, or grounding bus, to main metal water service entrances to building. Connect grounding conductors to main metal water service pipes; use a bolted clamp connector or bolt a lug-type connector to a pipe flange by using one of the lug bolts of the flange. Where a dielectric main water fitting is installed, connect grounding conductor on street side of fitting. Bond metal grounding conductor conduit or sleeve to conductor at each end.
2. Water Meter Piping: Use braided-type bonding jumpers to electrically bypass water meters. Connect to pipe with a bolted connector.
3. Bond each aboveground portion of gas piping system downstream from equipment shutoff valve.

3.6 FIELD QUALITY CONTROL

A. Tests and Inspections:

1. After installing grounding system but before permanent electrical circuits have been energized, test for compliance with requirements.
2. Inspect physical and mechanical condition. Verify tightness of accessible, bolted, electrical connections with a calibrated torque wrench according to manufacturer's written instructions.

3. Test completed grounding system at each location where a maximum ground-resistance level is specified, at service disconnect enclosure grounding terminal, at individual ground rods. Make tests at ground rods before any conductors are connected.

    a. Measure ground resistance no fewer than two full days after last trace of precipitation and without soil being moistened by any means other than natural drainage or seepage and without chemical treatment or other artificial means of reducing natural ground resistance.
    b. Perform tests by fall-of-potential method according to IEEE 81.

4. Prepare dimensioned Drawings locating each, ground rod and ground-rod assembly, and other grounding electrodes. Identify each by letter in alphabetical order, and key to the record of tests and observations. Include the number of rods driven and their depth at each location, and include observations of weather and other phenomena that may affect test results. Describe measures taken to improve test results.

B. Grounding system will be considered defective if it does not pass tests and inspections.

C. Prepare test and inspection reports.

D. Report measured ground resistances that exceed the following values:

1. Power and Lighting Equipment or System with Capacity of 500 kVA and less: 10 ohms.
2. Power and Lighting Equipment or System with Capacity of 500 to 1000 kVA: 5 ohms.
3. Power and Lighting Equipment or System with Capacity More Than 1000 kVA: 3 ohms.
4. Power Distribution Units or Panelboards Serving Electronic Equipment: 3 ohm(s).
5. Manhole Grounds: 10 ohms.

E. Excessive Ground Resistance: If resistance to ground exceeds specified values, notify Engineer promptly and include recommendations to reduce ground resistance.

END OF SECTION 260526

SECTION 260529 - HANGERS AND SUPPORTS FOR ELECTRICAL SYSTEMS

PART 1 - GENERAL

1.1 RELATED DOCUMENTS

A. Drawings and general provisions of the Contract, including General and Supplementary Conditions and Division 01 Specification Sections, apply to this Section.

1.2 SUMMARY

A. Section Includes:

1. Hangers and supports for electrical equipment and systems.
2. Construction requirements for concrete bases.

1.3 ACTION SUBMITTALS

A. Product Data: For each type of product.

1. Include construction details, material descriptions, dimensions of individual components and profiles, and finishes for the following:

a. Hangers.
b. Steel slotted support systems.
c. Nonmetallic support systems.
d. Trapeze hangers.
e. Clamps.
f. Turnbuckles.
g. Sockets.
h. Eye nuts.
i. Saddles.
j. Brackets.

2. Include rated capacities and furnished specialties and accessories.

B. Shop Drawings: For fabrication and installation details for electrical hangers and support systems.

1. Trapeze hangers. Include product data for components.
2. Steel slotted-channel systems.
3. Nonmetallic slotted-channel systems.
4. Equipment supports.

1.4 INFORMATIONAL SUBMITTALS

A. Coordination Drawings: Reflected ceiling plan(s) and other details, drawn to scale, on which the following items are shown and coordinated with each other, using input from installers of the items involved:

1. Suspended ceiling components.
2. Structural members to which hangers and supports will be attached.
3. Size and location of initial access modules for acoustical tile.
4. Items penetrating finished ceiling, including the following:

a. Lighting fixtures.
b. Air outlets and inlets.
c. Speakers.
d. Sprinklers.
e. Access panels.
f. Projectors.

B. Welding certificates.

1.5 QUALITY ASSURANCE

A. Welding Qualifications: Qualify procedures and personnel according to the following:

1. AWS D1.1/D1.1M.
2. AWS D1.2/D1.2M.

PART 2 - PRODUCTS

2.1 PERFORMANCE REQUIREMENTS

A. Surface-Burning Characteristics: Comply with ASTM E 84; testing by a qualified testing agency. Identify products with appropriate markings of applicable testing agency.

1. Flame Rating: Class 1.
2. Self-extinguishing according to ASTM D 635.

2.2 SUPPORT, ANCHORAGE, AND ATTACHMENT COMPONENTS

A. Steel Slotted Support Systems: Comply with MFMA-4 factory-fabricated components for field assembly.
1. Manufacturers: Subject to compliance with requirements, provide products by one of the following:

a. Allied Tube & Conduit.
b. Cooper B-Line, Inc.; a division of Cooper Industries.
c. ERICO International Corporation.
d. GS Metals Corp.

e. Thomas & Betts Corporation.
f. Unistrut; Tyco International, Ltd.
g. Wesanco, Inc.

2. Material: Plain steel.
3. Channel Width: 1-1/4 inches.
4. Metallic Coatings: Hot-dip galvanized after fabrication and applied according to MFMA-4.
5. Nonmetallic Coatings: Manufacturer's standard PVC, polyurethane, or polyester coating applied according to MFMA-4.
6. Painted Coatings: Manufacturer's standard painted coating applied according to MFMA-4.
7. Protect finishes on exposed surfaces from damage by applying a strippable, temporary protective covering before shipping.
8. Channel Dimensions: Selected for applicable load criteria.

B. Conduit and Cable Support Devices: Steel hangers, clamps, and associated fittings, designed for types and sizes of raceway or cable to be supported.

C. Support for Conductors in Vertical Conduit: Factory-fabricated assembly consisting of threaded body and insulating wedging plug or plugs for nonarmored electrical conductors or cables in riser conduits. Plugs shall have number, size, and shape of conductor gripping pieces as required to suit individual conductors or cables supported. Body shall be made of malleable iron.

D. Structural Steel for Fabricated Supports and Restraints: ASTM A 36/A 36M steel plates, shapes, and bars; black and galvanized.

E. Mounting, Anchoring, and Attachment Components: Items for fastening electrical items or their supports to building surfaces include the following:

1. Powder-Actuated Fasteners: Threaded-steel stud, for use in hardened portland cement concrete, steel, or wood, with tension, shear, and pullout capacities appropriate for supported loads and building materials where used.
   a. Manufacturers: Subject to compliance with requirements, provide products by one of the following:
      1) Hilti Inc.
      2) ITW Ramset/Red Head; a division of Illinois Tool Works, Inc.
      3) MKT Fastening, LLC.
      4) Simpson Strong-Tie Co., Inc.; Masterset Fastening Systems Unit.

2. Mechanical-Expansion Anchors: Insert-wedge-type, zinc-coated steel, for use in hardened portland cement concrete, with tension, shear, and pullout capacities appropriate for supported loads and building materials where used.
   a. Manufacturers: Subject to compliance with requirements, provide products by one of the following:
      1) Cooper B-Line, Inc.; a division of Cooper Industries.
      2) Empire Tool and Manufacturing Co., Inc.
      3) Hilti Inc.
      4) ITW Ramset/Red Head; a division of Illinois Tool Works, Inc.
      5) MKT Fastening, LLC

3. Concrete Inserts: Steel or malleable-iron, slotted support system units are similar to MSS Type 18 units and comply with MFMA-4 or MSS SP-58.
   a. Clamps for Attachment to Steel Structural Elements: MSS SP-58 units are suitable for attached structural element.
   b. Through Bolts: Structural type, hex head, and high strength. Comply with ASTM A 325.
   c. Toggle Bolts: All-steel springhead type.
   d. Hanger Rods: Threaded steel.
   e. Concrete Inserts: Steel or malleable-iron, slotted support system units similar to MSS Type 18; complying with MFMA-4 or MSS SP-58.
   f. Clamps for Attachment to Steel Structural Elements: MSS SP-58, type suitable for attached structural element.
   g. Through Bolts: Structural type, hex head, and high strength. Comply with ASTM A 325.
   h. Toggle Bolts: All-steel springhead type.
   i. Hanger Rods: Threaded steel

2.3 FABRICATED METAL EQUIPMENT SUPPORT ASSEMBLIES

A. Description: Welded or bolted structural-steel shapes, shop or field fabricated to fit dimensions of supported equipment.

B. Materials: Comply with requirements in Section 055000 "Metal Fabrications" for steel shapes and plates.

PART 3 - EXECUTION

3.1 APPLICATION

A. Comply with NECA 1 and NECA 101 for application of hangers and supports for electrical equipment and systems unless requirements in this Section are stricter.

B. Comply with requirements for raceways and boxes specified in Section 260533 "Raceways and Boxes for Electrical Systems."

C. Maximum Support Spacing and Minimum Hanger Rod Size for Raceway: Space supports for EMTs and RMCs as scheduled in NECA 1, where its Table 1 lists maximum spacings that are less than those stated in] NFPA 70. Minimum rod size shall be 1/4 inch in diameter.

D. Multiple Raceways or Cables: Install trapeze-type supports fabricated with steel slotted support system, sized so capacity can be increased by at least 25 percent in future without exceeding specified design load limits.

   1. Secure raceways and cables to these supports with two-bolt conduit clamps.

E. Spring-steel clamps designed for supporting single conduits without bolts may be used for 1-1/2-inch and smaller raceways serving branch circuits and communication systems above suspended ceilings and for fastening raceways to trapeze supports.

3.2 SUPPORT INSTALLATION

A. Comply with NECA 1 and NECA 101 for installation requirements except as specified in this article.

B. Raceway Support Methods: In addition to methods described in NECA 1, EMTs, and RMCs may be supported by openings through structure members, according to NFPA 70.

C. Strength of Support Assemblies: Where not indicated, select sizes of components so strength will be adequate to carry present and future static loads within specified loading limits. Minimum static design load used for strength determination shall be weight of supported components plus 200 lb.

D. Mounting and Anchorage of Surface-Mounted Equipment and Components: Anchor and fasten electrical items and their supports to building structural elements by the following methods unless otherwise indicated by code:

1. To Wood: Fasten with lag screws or through bolts.
2. To New Concrete: Bolt to concrete inserts.
3. To Masonry: Approved toggle-type bolts on hollow masonry units and expansion anchor fasteners on solid masonry units.
4. To Existing Concrete: Expansion anchor fasteners.
5. Instead of expansion anchors, powder-actuated driven threaded studs provided with lock washers and nuts may be used in existing standard-weight concrete 4 inches thick or greater. Do not use for anchorage to lightweight-aggregate concrete or for slabs less than 4 inches thick.
6. To Steel: Spring-tension clamps.
7. To Light Steel: Sheet metal screws.
8. Items Mounted on Hollow Walls and Nonstructural Building Surfaces: Mount cabinets, panelboards, disconnect switches, control enclosures, pull and junction boxes, transformers, and other devices on slotted-channel racks attached to substrate.

E. Drill holes for expansion anchors in concrete at locations and to depths that avoid the need for reinforcing bars.

3.3 INSTALLATION OF FABRICATED METAL SUPPORTS

A. Comply with installation requirements in Architectural Section "Metal Fabrications" for site-fabricated metal supports.

B. Cut, fit, and place miscellaneous metal supports accurately in location, alignment, and elevation to support and anchor electrical materials and equipment.

C. Field Welding: Comply with AWS D1.1/D1.1M.

3.4 CONCRETE BASES

A. Construct concrete bases of dimensions indicated but not less than 4 inches larger in both directions than supported unit, and so anchors will be a minimum of 10 bolt diameters from edge of the base.

B. Use 3000-psi, 28-day compressive-strength concrete. Concrete materials, reinforcement, and placement requirements are specified in Sections "Cast-in-Place Concrete" or "Miscellaneous Cast-in-Place Concrete."

C. Anchor equipment to concrete base as follows:

1. Place and secure anchorage devices. Use supported equipment manufacturer's setting drawings, templates, diagrams, instructions, and directions furnished with items to be embedded.
2. Install anchor bolts to elevations required for proper attachment to supported equipment.
3. Install anchor bolts according to anchor-bolt manufacturer's written instructions.

3.5 PAINTING

A. Touchup: Clean field welds and abraded areas of shop paint. Paint exposed areas immediately after erecting hangers and supports. Use same materials as used for shop painting. Comply with SSPC-PA 1 requirements for touching up field-painted surfaces.

1. Apply paint by brush or spray to provide minimum dry film thickness of 2.0 mils.

B. Touchup: Comply with requirements in Sections "Exterior Painting", "Interior Painting" and "High-Performance Coatings" for cleaning and touchup painting of field welds, bolted connections, and abraded areas of shop paint on miscellaneous metal.

C. Galvanized Surfaces: Clean welds, bolted connections, and abraded areas and apply galvanizing-repair paint to comply with ASTM A 780.

END OF SECTION 260529

SECTION 260533 - RACEWAYS AND BOXES FOR ELECTRICAL SYSTEMS

PART 1 - GENERAL

1.1 RELATED DOCUMENTS

A. Drawings and general provisions of the Contract, including General and Supplementary Conditions and Division 01 Specification Sections, apply to this Section.

1.2 SUMMARY

A. Section Includes:

1. Metal conduits, tubing, and fittings.
2. Nonmetal conduits, tubing, and fittings.
3. Metal wireways and auxiliary gutters.
4. Surface raceways.
5. Boxes, enclosures, and cabinets.
6. Handholes and boxes for exterior underground cabling.

1.3 DEFINITIONS

A. GRC: Galvanized rigid steel conduit.

B. IMC: Intermediate metal conduit.

C. EMT: Electrical metallic tubing.

D. FMC: Flexible metal conduit.

E. LFMC: Liquidtight flexible metal conduit.

F. RNC: Rigid nonmetallic conduit.

1.4 ACTION SUBMITTALS

A. Product Data: For raceways, wireways and fittings, floor boxes, hinged-cover enclosures, and cabinets.

B. Shop Drawings: For custom enclosures and cabinets. Include plans, elevations, sections, and attachment details.

1.5 INFORMATIONAL SUBMITTALS

A. Coordination Drawings: Conduit routing plans, drawn to scale, on which the following items are shown and coordinated with each other, using input from installers of items involved:

1. Structural members in paths of conduit groups with common supports.
2. HVAC and plumbing items and architectural features in paths of conduit groups with common supports.

B. Source quality-control reports.

PART 2 - PRODUCTS

2.1 METAL CONDUITS, TUBING, AND FITTINGS

A. Manufacturers: Subject to compliance with requirements, provide products by one of the following:

1. AFC Cable Systems, Inc.
2. Alflex Inc.
3. Allied Tube & Conduit; a Tyco International Ltd. Co.
4. Anamet Electrical, Inc.; Anaconda Metal Hose.
5. Electri-Flex Co.
6. Manhattan/CDT/Cole-Flex.
7. Maverick Tube Corporation.
8. O-Z Gedney; a unit of General Signal.
9. Wheatland Tube Company.
10. Hylsa

B. Listing and Labeling: Metal conduits, tubing, and fittings shall be listed and labeled as defined in NFPA 70, by a qualified testing agency, and marked for intended location and application.

C. GRC: Comply with ANSI C80.1 and UL 6.

D. EMT: Comply with ANSI C80.3 and UL 797.

E. FMC: Comply with UL 1; zinc-coated steel.

F. LFMC: Flexible steel conduit with PVC jacket and complying with UL 360.

G. Fittings for Metal Conduit: Comply with NEMA FB 1 and UL 514B.

1. Conduit Fittings for Hazardous (Classified) Locations: Comply with UL 886 and NFPA 70.
2. Fittings for EMT:

   a. Material: Steel (Zinc is not acceptable).
   b. Type: set-screw.

3. Expansion Fittings: PVC or steel to match conduit type, complying with UL 651, rated for environmental conditions where installed, and including flexible external bonding jumper.

H. Joint Compound for GRC: Approved, as defined in NFPA 70, by authorities having jurisdiction for use in conduit assemblies, and compounded for use to lubricate and protect threaded conduit joints from corrosion and to enhance their conductivity.

2.2 NONMETALLIC CONDUITS, TUBING, AND FITTINGS

A. Manufacturers: Subject to compliance with requirements, provide products by one of the following:

1. AFC Cable Systems, Inc.
2. Anamet Electrical, Inc.; Anaconda Metal Hose.
3. Arnco Corporation.
4. CANTEX Inc.
5. CertainTeed Corp.; Pipe & Plastics Group.
6. Condux International, Inc.
7. ElecSYS, Inc.
8. Electri-Flex Co.
9. Lamson & Sessions; Carlon Electrical Products.
10. Manhattan/CDT/Cole-Flex.
11. RACO; a Hubbell Company.
12. Thomas & Betts Corporation.

B. Listing and Labeling: Nonmetallic conduits, tubing, and fittings shall be listed and labeled as defined in NFPA 70, by a qualified testing agency, and marked for intended location and application.

C. RNC: Type EPC-40-PVCcomplying with NEMA TC 2 and UL 651 unless otherwise indicated.

D. Fittings for and RNC: Comply with NEMA TC 3; match to conduit or tubing type and material.

2.3 METAL WIREWAYS AND AUXILIARY GUTTERS

A. Manufacturers: Subject to compliance with requirements, provide products by one of the following:

1. Cooper B-Line, Inc.
2. Hoffman.
3. Square D; Schneider Electric.

B. Description: Sheet metal, complying with UL 870 and NEMA 250, Type 1 or Type 3R unless otherwise indicated, and sized according to NFPA 70.

1. Metal wireways installed outdoors shall be listed and labeled as defined in NFPA 70, by a qualified testing agency, and marked for intended location and application.

C. Fittings and Accessories: Include covers, couplings, offsets, elbows, expansion joints, adapters, hold-down straps, end caps, and other fittings to match and mate with wireways as required for complete system.

D. Wireway Covers: Hinged type unless otherwise indicated.

E. Finish: Manufacturer's standard enamel finish.

2.4 SURFACE RACEWAYS

A. Listing and Labeling: Surface raceways and tele-power poles shall be listed and labeled as defined in NFPA 70, by a qualified testing agency, and marked for intended location and application.

B. Surface Metal Raceways: Galvanized steel with snap-on covers complying with UL 5. Manufacturer's standard enamel finish in color selected by Engineer.

1. Manufacturers: Subject to compliance with requirements, provide products by one of the following:

    a. Hubbell Wiring Device-Kellems
    b. Thomas & Betts Corporation.
    c. Walker Systems, Inc.; Wiremold Company (The).
    d. Wiremold Company (The); Electrical Sales Division.
    e. Panduit.

2.5 BOXES, ENCLOSURES, AND CABINETS

A. Manufacturers: Subject to compliance with requirements, provide products by one of the following:

1. Cooper Crouse-Hinds; Div. of Cooper Industries, Inc.
2. EGS/Appleton Electric.
3. Erickson Electrical Equipment Company.
4. Hoffman.
5. Hubbell Incorporated; Killark Electric Manufacturing Co. Division.
6. O-Z/Gedney; a unit of General Signal.
7. RACO; a Hubbell Company.
8. Robroy Industries, Inc.; Enclosure Division.
9. Spring City Electrical Manufacturing Company.
10. Thomas & Betts Corporation.
11. Walker Systems, Inc.; Wiremold Company (The).

B. General Requirements for Boxes, Enclosures, and Cabinets: Boxes, enclosures, and cabinets installed in wet locations shall be listed for use in wet locations.

C. Sheet Metal Outlet and Device Boxes: Comply with NEMA OS 1 and UL 514A.

D. Cast-Metal Outlet and Device Boxes: Comply with NEMA FB 1, aluminum, Type FD, with gasketed cover.

E. Luminaire Outlet Boxes: Nonadjustable, designed for attachment of luminaire weighing 50 lb. Outlet boxes designed for attachment of luminaires weighing more than 50 lb shall be listed and marked for the maximum allowable weight.

F. Small Sheet Metal Pull and Junction Boxes: NEMA OS 1.

G. Cast-Metal Access, Pull, and Junction Boxes: Comply with NEMA FB 1 and UL 1773, cast aluminum with gasketed cover.

H. Box extensions used to accommodate new building finishes shall be of same material as recessed box.

I. Device Box Dimensions: 4 inches by 2-1/8 inches by 2-1/8 inches deep.

J. Gangable boxes are allowed as along is permitted by the NEC.

K. Hinged-Cover Enclosures: Comply with UL 50 and NEMA 250, Type 1 for indoor applications and Type 4X SS outdoor with continuous-hinge cover with flush latch unless otherwise indicated.

1. Metal Enclosures: Steel, finished inside and out with manufacturer's standard enamel.
2. Interior Panels: Steel; all sides finished with manufacturer's standard enamel.

L. Cabinets:

1. NEMA 250, Type 1, Type 4X SS box with removable interior panel and removable front, finished inside and out with manufacturer's standard enamel.
2. Hinged door in front cover with flush latch and concealed hinge.
3. Key latch to match panelboards.
4. Metal barriers to separate wiring of different systems and voltage.
5. Accessory feet where required for freestanding equipment.
6. Nonmetallic cabinets shall be listed and labeled as defined in NFPA 70, by a qualified testing agency, and marked for intended location and application.

2.6 HANDHOLES AND BOXES FOR EXTERIOR UNDERGROUND WIRING

A. General Requirements for Handholes and Boxes:

1. Boxes and handholes for use in underground systems shall be designed and identified as defined in NFPA 70, for intended location and application.
2. Boxes installed in wet areas shall be listed and labeled as defined in NFPA 70, by a qualified testing agency, and marked for intended location and application.

B. Polymer-Concrete Handholes and Boxes with Polymer-Concrete Cover: Molded of sand and aggregate, bound together with polymer resin, and reinforced with steel, fiberglass, or a combination of the two.
1. Manufacturers: Subject to compliance with requirements, provide products by one of the following:
2. Basis-of-Design Product: Subject to compliance with requirements, provide the product indicated on Drawings or a comparable product by one of the following:

a. Armorcast Products Company.
b. Carson Industries LLC.
c. CDR Systems Corporation.
d. NewBasis.

3. Standard: Comply with SCTE 77.
4. Configuration: Designed for flush burial with open bottom unless otherwise indicated.
5. Cover: Weatherproof, secured by tamper-resistant locking devices and having structural load rating consistent with enclosure and handhole location.
6. Cover Finish: Nonskid finish shall have a minimum coefficient of friction of 0.50.
7. Cover Legend: Molded lettering, "ELECTRIC".
8. Conduit Entrance Provisions: Conduit-terminating fittings shall mate with entering ducts for secure, fixed installation in enclosure wall.
9. Handholes 18 Inches Wide by 24 Inches Long and Larger: Have inserts for cable racks and pulling-in irons installed before concrete is poured.

2.7 SOURCE QUALITY CONTROL FOR UNDERGROUND ENCLOSURES

A. Handhole and Pull-Box Prototype Test: Test prototypes of handholes and boxes for compliance with SCTE 77. Strength tests shall be for specified tier ratings of products supplied.

1. Tests of materials shall be performed by an independent testing agency.
2. Strength tests of complete boxes and covers shall be by either an independent testing agency or manufacturer. A qualified registered professional engineer shall certify tests by manufacturer.
3. Testing machine pressure gages shall have current calibration certification complying with ISO 9000 and ISO 10012 and traceable to NIST standards.

PART 3 - EXECUTION

3.1 RACEWAY APPLICATION

A. Outdoors: Apply raceway products as specified below unless otherwise indicated:

1. Exposed Conduit: GRC.
2. Concealed Conduit, Aboveground: GRC.
3. Underground Conduit: RNC, Type EPC-40-PVC.
4. Connection to Vibrating Equipment (Including Transformers and Hydraulic, Pneumatic, Electric Solenoid, or Motor-Driven Equipment): LFMC.
5. Boxes and Enclosures, Aboveground: NEMA 250, Type 4X SS.

B. Indoors: Apply raceway products as specified below unless otherwise indicated:

1. Exposed, Not Subject to Physical Damage: EMT.
2. Exposed and Subject to Severe Physical Damage: GRC. Raceway locations include the following:

a. Loading dock.
b. Corridors used for traffic of mechanized carts, forklifts, and pallet-handling units.

c. Mechanical rooms.

3. Concealed in Ceilings and Interior Walls and Partitions: EMT
4. Connection to Vibrating Equipment (Including Transformers and Hydraulic, Pneumatic, Electric Solenoid, or Motor-Driven Equipment): FMC, except use LFMC in damp or wet locations.
5. Damp or Wet Locations: GRC.
6. Boxes and Enclosures: NEMA 250, Type 1, except use NEMA 250, Type 4X SS.

C. Minimum Raceway Size: 1/2-inch trade size.

D. Raceway Fittings: Compatible with raceways and suitable for use and location.

1. Rigid and Intermediate Steel Conduit: Use threaded rigid steel conduit fittings unless otherwise indicated. Comply with NEMA FB 2.10.
2. PVC Externally Coated, Rigid Steel Conduits: Use only fittings listed for use with this type of conduit. Patch and seal all joints, nicks, and scrapes in PVC coating after installing conduits and fittings. Use sealant recommended by fitting manufacturer and apply in thickness and number of coats recommended by manufacturer.
3. EMT: Use setscrew steel fittings. Comply with NEMA FB 2.10.
4. Flexible Conduit: Use only fittings listed for use with flexible conduit. Comply with NEMA FB 2.20.

E. Install nonferrous conduit or tubing for circuits operating above 60 Hz. Where aluminum raceways are installed for such circuits and pass through concrete, install in nonmetallic sleeve.

F. Do not install aluminum conduits, boxes, or fittings in contact with concrete or earth.

G. Install surface raceways only where indicated on Drawings.

H. Do not install nonmetallic conduit where ambient temperature exceeds 120 deg F.

3.2 INSTALLATION

A. Comply with NECA 1 and NECA 101 for installation requirements except where requirements on Drawings or in this article are stricter. Comply with NECA 102 for aluminum conduits. Comply with NFPA 70 limitations for types of raceways allowed in specific occupancies and number of floors.

B. Keep raceways at least 6 inches away from parallel runs of flues and steam or hot-water pipes. Install horizontal raceway runs above water and steam piping.

C. Complete raceway installation before starting conductor installation.

D. Comply with requirements in Section 260529 "Hangers and Supports for Electrical Systems" for hangers and supports.

E. Arrange stub-ups so curved portions of bends are not visible above finished slab.

F. Install no more than the equivalent of three 90-degree bends in any conduit run except for control wiring conduits, for which fewer bends are allowed. Support within 12 inches of changes in direction.

G. Conceal conduit and EMT within finished walls, ceilings, and floors unless otherwise indicated. Install conduits parallel or perpendicular to building lines.

H. Support conduit within 12 inches of enclosures to which attached.

I. Raceways Embedded in Slabs:

1. Run conduit larger than 1-inch trade size, parallel or at right angles to main reinforcement. Where at right angles to reinforcement, place conduit close to slab support. Secure raceways to reinforcement at maximum 10-foot intervals.
2. Arrange raceways to cross building expansion joints at right angles with expansion fittings.
3. Arrange raceways to keep a minimum of 2 inches of concrete cover in all directions.
4. Do not embed threadless fittings in concrete unless specifically approved by Engineer for each specific location.
5. Change from RNC, Type EPC-40-PVC TO EMT or GRC before rising above floor.

J. Stub-ups to Above Recessed Ceilings:

1. Use EMT for raceways.
2. Use a conduit bushing or insulated fitting to terminate stub-ups not terminated in hubs or in an enclosure.

K. Threaded Conduit Joints, Exposed to Wet, Damp, Corrosive, or Outdoor Conditions: Apply listed compound to threads of raceway and fittings before making up joints. Follow compound manufacturer's written instructions.

L. Coat field-cut threads on PVC-coated raceway with a corrosion-preventing conductive compound prior to assembly.

M. Raceway Terminations at Locations Subject to Moisture or Vibration: Use insulating bushings to protect conductors including conductors smaller than No. 4 AWG.

N. Terminate threaded conduits into threaded hubs or with locknuts on inside and outside of boxes or cabinets. Install bushings on conduits up to 1-1/4-inch trade size and insulated throat metal bushings on 1-1/2-inch trade size and larger conduits terminated with locknuts. Install insulated throat metal grounding bushings on service conduits.

O. Install raceways square to the enclosure and terminate at enclosures with locknuts. Install locknuts hand tight plus 1/4 turn more.

P. Do not rely on locknuts to penetrate nonconductive coatings on enclosures. Remove coatings in the locknut area prior to assembling conduit to enclosure to assure a continuous ground path.

Q. Cut conduit perpendicular to the length. For conduits 2-inch trade size and larger, use roll cutter or a guide to make cut straight and perpendicular to the length.

R. Install pull wires in empty raceways. Use polypropylene or monofilament plastic line with not less than 200-lb tensile strength. Leave at least 12 inches of slack at each end of pull wire. Cap underground raceways designated as spare above grade alongside raceways in use.

S. Surface Raceways:

1. Install surface raceway with a minimum 2-inch radius control at bend points.
2. Secure surface raceway with screws or other anchor-type devices at intervals not exceeding 48 inches and with no less than two supports per straight raceway section. Support surface raceway according to manufacturer's written instructions. Tape and glue are not acceptable support methods.

T. Install raceway sealing fittings at accessible locations according to NFPA 70 and fill them with listed sealing compound. For concealed raceways, install each fitting in a flush steel box with a blank cover plate having a finish similar to that of adjacent plates or surfaces. Install raceway sealing fittings according to NFPA 70.

U. Install devices to seal raceway interiors at accessible locations. Locate seals so no fittings or boxes are between the seal and the following changes of environments. Seal the interior of all raceways at the following points:

1. Where conduits pass from warm to cold locations, such as boundaries of refrigerated spaces.
2. Where an underground service raceway enters a building or structure.
3. Where otherwise required by NFPA 70.

V. Comply with manufacturer's written instructions for solvent welding RNC and fittings.

W. Expansion-Joint Fittings:

1. Install in each run of aboveground RNC that is located where environmental temperature change may exceed 30 deg F and that has straight-run length that exceeds 25 feet. Install in each run of aboveground RMC conduit that is located where environmental temperature change may exceed 100 deg F and that has straight-run length that exceeds 100 feet.
2. Install type and quantity of fittings that accommodate temperature change listed for each of the following locations:

    a. Outdoor Locations Not Exposed to Direct Sunlight: 125 deg F temperature change.
    b. Outdoor Locations Exposed to Direct Sunlight: 155 deg F temperature change.
    c. Indoor Spaces Connected with Outdoors without Physical Separation: 125 deg F temperature change.
    d. Attics: 135 deg F.

3. Install fitting(s) that provide expansion and contraction for at least 0.00041 inch per foot of length of straight run per deg F of temperature change for PVC conduits. Install fitting(s) that provide expansion and contraction for at least 0.000078 inch per foot of length of straight run per deg F of temperature change for metal conduits.
4. Install expansion fittings at all locations where conduits cross building or structure expansion joints.

5. Install each expansion-joint fitting with position, mounting, and piston setting selected according to manufacturer's written instructions for conditions at specific location at time of installation. Install conduit supports to allow for expansion movement.

X. Flexible Conduit Connections: Comply with NEMA RV 3. Use a maximum of 72 inches of flexible conduit for recessed and semirecessed luminaires, equipment subject to vibration, noise transmission, or movement; and for transformers and motors.

1. Use LFMC in damp or wet locations subject to severe physical damage.
2. Use LFMC in damp or wet locations not subject to severe physical damage.

Y. Mount boxes at heights indicated on Drawings. If mounting heights of boxes are not individually indicated, give priority to ADA requirements. Install boxes with height measured to center of box unless otherwise indicated.

Z. Recessed Boxes in Masonry Walls: Saw-cut opening for box in center of cell of masonry block, and install box flush with surface of wall. Prepare block surfaces to provide a flat surface for a raintight connection between box and cover plate or supported equipment and box.

AA. Horizontally separate boxes mounted on opposite sides of walls so they are not in the same vertical channel.

BB. Locate boxes so that cover or plate will not span different building finishes.

CC. Support boxes of three gangs or more from more than one side by spanning two framing members or mounting on brackets specifically designed for the purpose.

DD. Fasten junction and pull boxes to or support from building structure. Do not support boxes by conduits.

3.3 INSTALLATION OF UNDERGROUND CONDUIT

A. Direct-Buried Conduit:

1. Excavate trench bottom to provide firm and uniform support for conduit. Prepare trench bottom as specified in Division 3 for pipe less than 6 inches in nominal diameter.
2. Install backfill as specified in Division 3."
3. After installing conduit, backfill and compact. Start at tie-in point, and work toward end of conduit run, leaving conduit at end of run free to move with expansion and contraction as temperature changes during this process. Firmly hand tamp backfill around conduit to provide maximum supporting strength. After placing controlled backfill to within 12 inches of finished grade, make final conduit connection at end of run and complete backfilling with normal compaction as specified in Division 3."
4. Install manufactured duct elbows for stub-ups at poles and equipment and at building entrances through floor unless otherwise indicated. Encase elbows for stub-up ducts throughout length of elbow.
5. Install manufactured rigid steel conduit elbows for stub-ups at poles and equipment and at building entrances through floor.

a. Couple steel conduits to ducts with adapters designed for this purpose, and encase coupling with 3 inches of concrete for a minimum of 12 inches on each side of the coupling.
b. For stub-ups at equipment mounted on outdoor concrete bases and where conduits penetrate building foundations, extend steel conduit horizontally a minimum of 60 inches from edge of foundation or equipment base. Install insulated grounding bushings on terminations at equipment.

6. Warning Planks: Bury warning planks approximately 12 inches above direct-buried conduits but a minimum of 6 inches below grade. Align planks along centerline of conduit.
7. Underground Warning Tape: Comply with requirements in Section 260553 "Identification for Electrical Systems."

3.4 INSTALLATION OF UNDERGROUND HANDHOLES AND BOXES

A. Install handholes and boxes level and plumb and with orientation and depth coordinated with connecting conduits to minimize bends and deflections required for proper entrances.

B. Unless otherwise indicated, support units on a level bed of crushed stone or gravel, graded from 1/2-inch sieve to No. 4 sieve and compacted to same density as adjacent undisturbed earth.

C. Elevation: In paved areas, set so cover surface will be flush with finished grade. Set covers of other enclosures 1 inch above finished grade.

D. Install handholes with bottom below frost line, below grade.

E. Install removable hardware, including pulling eyes, cable stanchions, cable arms, and insulators, as required for installation and support of cables and conductors and as indicated. Select arm lengths to be long enough to provide spare space for future cables but short enough to preserve adequate working clearances in enclosure.

F. Field-cut openings for conduits according to enclosure manufacturer's written instructions. Cut wall of enclosure with a tool designed for material to be cut. Size holes for terminating fittings to be used, and seal around penetrations after fittings are installed.

3.5 SLEEVE AND SLEEVE-SEAL INSTALLATION FOR ELECTRICAL PENETRATIONS

A. Install sleeves and sleeve seals at penetrations of exterior floor and wall assemblies. Comply with requirements in Section 260544 "Sleeves and Sleeve Seals for Electrical Raceways and Cabling."

3.6 FIRESTOPPING

A. Install firestopping at penetrations of fire-rated floor and wall assemblies. Comply with requirements in Section 078413 "Penetration Firestopping."

3.7 PROTECTION

A. Protect coatings, finishes, and cabinets from damage and deterioration.

1. Repair damage to galvanized finishes with zinc-rich paint recommended by manufacturer.
2. Repair damage to PVC coatings or paint finishes with matching touchup coating recommended by manufacturer.

END OF SECTION 260533

SECTION 260544 - SLEEVES AND SLEEVE SEALS FOR ELECTRICAL RACEWAYS AND CABLING

PART 1 - GENERAL

1.1 RELATED DOCUMENTS

A. Drawings and general provisions of the Contract, including General and Supplementary Conditions and Division 01 Specification Sections, apply to this Section.

1.2 SUMMARY

A. Section Includes:

1. Sleeves for raceway and cable penetration of non-fire-rated construction walls and floors.
2. Grout.
3. Silicone sealants.

B. Related Requirements:

1. Section 078413 "Penetration Firestopping" for penetration firestopping installed in fire-resistance-rated walls, horizontal assemblies, and smoke barriers, with and without penetrating items.

1.3 ACTION SUBMITTALS

A. Product Data: For each type of product.

PART 2 - PRODUCTS

2.1 SLEEVES

A. Wall Sleeves:

1. Steel Pipe Sleeves: ASTM A 53/A 53M, Type E, Grade B, Schedule 40, zinc coated, plain ends.

B. Sleeves for Conduits Penetrating Non-Fire-Rated Gypsum Board Assemblies: Galvanized-steel sheet; 0.0239-inch minimum thickness; round tube closed with welded longitudinal joint, with tabs for screw-fastening the sleeve to the board.

C. PVC-Pipe Sleeves: ASTM D 1785, Schedule 40.

2.2 GROUT

A. Description: Nonshrink; recommended for interior and exterior sealing openings in non-fire-rated walls or floors.

B. Standard: ASTM C 1107/C 1107M, Grade B, post-hardening and volume-adjusting, dry, hydraulic-cement grout.

C. Design Mix: 5000-psi, 28-day compressive strength.

D. Packaging: Premixed and factory packaged.

2.3 SILICONE SEALANTS

A. Silicone Sealants: Single-component, silicone-based, neutral-curing elastomeric sealants of grade indicated below.

1. Grade: Pourable (self-leveling) formulation for openings in floors and other horizontal surfaces that are not fire rated.
2. Sealant shall have VOC content of 150 g/L or less when calculated according to 40 CFR 59, Subpart D (EPA Method 24).
3. Sealant shall comply with the testing and product requirements of the California Department of Health Services' "Standard Practice for the Testing of Volatile Organic Emissions from Various Sources Using Small-Scale Environmental Chambers."

B. Silicone Foams: Multicomponent, silicone-based liquid elastomers that, when mixed, expand and cure in place to produce a flexible, nonshrinking foam.

PART 3 - EXECUTION

3.1 SLEEVE INSTALLATION FOR NON-FIRE-RATED ELECTRICAL PENETRATIONS

A. Comply with NECA 1.

B. Comply with NEMA VE 2 for cable tray and cable penetrations.

C. Sleeves for Conduits Penetrating Above-Grade Non-Fire-Rated Concrete and Masonry-Unit Floors and Walls:

1. Interior Penetrations of Non-Fire-Rated Walls and Floors:

a. Seal annular space between sleeve and raceway or cable, using joint sealant appropriate for size, depth, and location of joint. Comply with requirements in Section 079200 "Joint Sealants."
b. Seal space outside of sleeves with mortar or grout. Pack sealing material solidly between sleeve and wall so no voids remain. Tool exposed surfaces smooth; protect material while curing.

2. Use pipe sleeves unless penetration arrangement requires rectangular sleeved opening.
3. Size pipe sleeves to provide 1/4-inch annular clear space between sleeve and raceway or cable unless sleeve seal is to be installed.
4. Install sleeves for wall penetrations unless core-drilled holes or formed openings are used. Install sleeves during erection of walls. Cut sleeves to length for mounting flush with both surfaces of walls. Deburr after cutting.
5. Install sleeves for floor penetrations. Extend sleeves installed in floors 2 inches above finished floor level. Install sleeves during erection of floors.

D. Sleeves for Conduits Penetrating Non-Fire-Rated Gypsum Board Assemblies:

1. Use circular metal sleeves unless penetration arrangement requires rectangular sleeved opening.
2. Seal space outside of sleeves with approved joint compound for gypsum board assemblies.

E. Roof-Penetration Sleeves: Seal penetration of individual raceways and cables with flexible boot-type flashing units applied in coordination with roofing work.

F. Aboveground, Exterior-Wall Penetrations: Seal penetrations using steel pipe sleeves and mechanical sleeve seals. Select sleeve size to allow for 1-inch annular clear space between pipe and sleeve for installing mechanical sleeve seals.

G. Underground, Exterior-Wall and Floor Penetrations: Install cast-iron pipe sleeves. Size sleeves to allow for 1-inch annular clear space between raceway or cable and sleeve for installing sleeve-seal system.

END OF SECTION 260544

SECTION 260553 - IDENTIFICATION FOR ELECTRICAL SYSTEMS

PART 1 - GENERAL

1.1 SUMMARY

A. Section Includes:

1. Identification for raceways.
2. Identification of power and control cables.
3. Identification for conductors.
4. Underground-line warning tape.
5. Warning labels and signs.
6. Instruction signs.
7. Equipment identification labels.
8. Miscellaneous identification products.

1.2 ACTION SUBMITTALS

A. Product Data: For each electrical identification product indicated.

1.3 QUALITY ASSURANCE

A. Comply with ANSI A13.1.

B. Comply with NFPA 70.

C. Comply with 29 CFR 1910.144 and 29 CFR 1910.145.

D. Comply with ANSI Z535.4 for safety signs and labels.

E. Adhesive-attached labeling materials, including label stocks, laminating adhesives, and inks used by label printers, shall comply with UL 969.

PART 2 - PRODUCTS

2.1 POWER AND CONTROL RACEWAY IDENTIFICATION MATERIALS

A. Comply with ANSI A13.1 for minimum size of letters for legend and for minimum length of color field for each raceway size.

B. Colors for Raceways Carrying Circuits at 600 V or Less:

1. Black letters on an orange field.
2. Legend: Indicate voltage and system or service type.

C. Vinyl Labels for Raceways Carrying Circuits at 600 V or Less: Preprinted, flexible label laminated with a clear, weather- and chemical-resistant coating and matching wraparound clear adhesive tape for securing ends of legend label.

2.2 ARMORED AND METAL-CLAD CABLE IDENTIFICATION MATERIALS

A. Comply with ANSI A13.1 for minimum size of letters for legend and for minimum length of color field for each cable size.

B. Colors for Cables Carrying Circuits at 600 V and Less:

1. Black letters on an orange field.
2. Legend: Indicate voltage and system or service type.

C. Vinyl Labels: Preprinted, flexible label laminated with a clear, weather- and chemical-resistant coating and matching wraparound clear adhesive tape for securing ends of legend label.

D. Self-Adhesive Vinyl Tape: Colored, heavy duty, waterproof, fade resistant; 2 inches wide; compounded for outdoor use.

E. Heat-Shrink Preprinted Tubes: Flame-retardant polyolefin tube with machine-printed identification label. Sized to suit diameter of and shrinks to fit firmly around cable it identifies. Full shrink recovery at a maximum of 200 deg F. Comply with UL 224.

2.3 POWER AND CONTROL CABLE IDENTIFICATION MATERIALS

A. Comply with ANSI A13.1 for minimum size of letters for legend and for minimum length of color field for each raceway and cable size.

B. Vinyl Labels: Preprinted, flexible label laminated with a clear, weather- and chemical-resistant coating and matching wraparound clear adhesive tape for securing ends of legend label.

C. Self-Adhesive, Self-Laminating Polyester Labels: Preprinted, 3-mil thick flexible label with acrylic pressure-sensitive adhesive that provides a clear, weather- and chemical- resistant, self-laminating, protective shield over the legend. Labels sized to fit the cable diameter such that the clear shield overlaps the entire printed legend.

D. Heat-Shrink Preprinted Tubes: Flame-retardant polyolefin tube with machine-printed identification label. Sized to suit diameter of and shrinks to fit firmly around cable it identifies. Full shrink recovery at a maximum of 200 deg F. Comply with UL 224.

E. Snap-Around Labels: Slit, pretensioned, flexible, preprinted, color-coded acrylic sleeve, with diameter sized to suit diameter of cable it identifies and to stay in place by gripping action.

F. Snap-Around, Color-Coding Bands: Slit, pretensioned, flexible, solid-colored acrylic sleeve, 2 inches long, with diameter sized to suit diameter of cable it identifies and to stay in place by gripping action.

2.4 CONDUCTOR IDENTIFICATION MATERIALS

A. Color-Coding Conductor Tape: Colored, self-adhesive vinyl tape not less than 3 mils thick by 1 to 2 inches wide.

B. Self-Adhesive, Self-Laminating Polyester Labels: Preprinted, 3-mil- thick flexible label with acrylic pressure-sensitive adhesive that provides a clear, weather- and chemical- resistant, self-laminating, protective shield over the legend. Labels sized to fit the conductor diameter such that the clear shield overlaps the entire printed legend.

C. Heat-Shrink Preprinted Tubes: Flame-retardant polyolefin tube with machine-printed identification label. Sized to suit diameter of and shrinks to fit firmly around conductor it identifies. Full shrink recovery at a maximum of 200 deg F. Comply with UL 224.

D. Marker Tapes: Vinyl or vinyl-cloth, self-adhesive wraparound type, with circuit identification legend machine printed by thermal transfer or equivalent process.

2.5 WARNING LABELS AND SIGNS

A. Comply with NFPA 70 and 29 CFR 1910.145.

B. Self-Adhesive Warning Labels: Factory-printed, multicolor, pressure-sensitive adhesive labels, configured for display on front cover, door, or other access to equipment unless otherwise indicated.

C. Baked-Enamel Warning Signs:

1. Preprinted aluminum signs, punched or drilled for fasteners, with colors, legend, and size required for application.
2. 1/4-inch grommets in corners for mounting.
3. Nominal size, 7 by 10 inches.

D. Metal-Backed, Butyrate Warning Signs:

1. Weather-resistant, nonfading, preprinted, cellulose-acetate butyrate signs with 0.0396-inch galvanized-steel backing; and with colors, legend, and size required for application.
2. 1/4-inch grommets in corners for mounting.
3. Nominal size, 10 by 14 inches.

E. Warning label and sign shall include, but are not limited to, the following legends:

1. Multiple Power Source Warning: "DANGER - ELECTRICAL SHOCK HAZARD - EQUIPMENT HAS MULTIPLE POWER SOURCES."
2. Workspace Clearance Warning: "WARNING - OSHA REGULATION - AREA IN FRONT OF ELECTRICAL EQUIPMENT MUST BE KEPT CLEAR FOR 36 INCHES."

2.6 INSTRUCTION SIGNS

A. Engraved, laminated acrylic or melamine plastic, minimum 1/16 inch thick for signs up to 20 sq. inches and 1/8 inch thick for larger sizes.

1. Engraved legend with black letters on white face.
2. Punched or drilled for mechanical fasteners.
3. Framed with mitered acrylic molding and arranged for attachment at applicable equipment.

B. Adhesive Film Label: Machine printed, in black, by thermal transfer or equivalent process. Minimum letter height shall be 3/8 inch.

C. Adhesive Film Label with Clear Protective Overlay: Machine printed, in black, by thermal transfer or equivalent process. Minimum letter height shall be 3/8 inch. Overlay shall provide a weatherproof and UV-resistant seal for label.

2.7 EQUIPMENT IDENTIFICATION LABELS

A. Adhesive Film Label with Clear Protective Overlay: Machine printed, in black, by thermal transfer or equivalent process. Minimum letter height shall be 3/8 inch. Overlay shall provide a weatherproof and UV-resistant seal for label.

B. Self-Adhesive, Engraved, Laminated Acrylic or Melamine Label: Adhesive backed, with white letters on a dark-gray background. Minimum letter height shall be 3/8 inch.

C. Stenciled Legend: In nonfading, waterproof, black ink or paint. Minimum letter height shall be 1 inch.

2.8 MISCELLANEOUS IDENTIFICATION PRODUCTS

A. Paint: Comply with requirements in painting Sections for paint materials and application requirements. Select paint system applicable for surface material and location (exterior or interior).

B. Fasteners for Labels and Signs: Self-tapping, stainless-steel screws or stainless-steel machine screws with nuts and flat and lock washers.

PART 3 - EXECUTION

3.1 INSTALLATION

A. Location: Install identification materials and devices at locations for most convenient viewing without interference with operation and maintenance of equipment.

B. Apply identification devices to surfaces that require finish after completing finish work.

C. Self-Adhesive Identification Products: Clean surfaces before application, using materials and methods recommended by manufacturer of identification device.

D. Attach signs and plastic labels that are not self-adhesive type with mechanical fasteners appropriate to the location and substrate.

E. Attach plastic raceway and cable labels that are not self-adhesive type with clear vinyl tape with adhesive appropriate to the location and substrate.

F. System Identification Color-Coding Bands for Raceways and Cables: Each color-coding band shall completely encircle cable or conduit. Place adjacent bands of two-color markings in contact, side by side. Locate bands at changes in direction, at penetrations of walls and floors, at 50-foot maximum intervals in straight runs, and at 25-foot maximum intervals in congested areas.

G. Underground-Line Detectable Warning Tape: During backfilling of trenches install continuous underground-line warning tape directly above line at 6 to 8 inches below finished grade. Use multiple tapes where width of multiple lines installed in a common trench or concrete envelope exceeds 16 inches overall.

H. Painted Identification: Comply with requirements in painting Sections for surface preparation and paint application.

3.2 IDENTIFICATION SCHEDULE

A. Accessible Raceways and Metal-Clad Cables, 600 V or Less, for Service, Feeder, and Branch Circuits More Than 30 A, and 120 V to ground: Install labels at 30-foot maximum intervals.

B. Accessible Raceways and Cables within Buildings: Identify the covers of each junction and pull box of the following systems with self-adhesive vinyl labels with the wiring system legend and system voltage. System legends shall be as follows:

1. Emergency Power.
2. Power.
3. Control Wiring.
4. DataWiring.

C. Power-Circuit Conductor Identification: For secondary conductors No. 1/0 AWG and larger in vaults, pull and junction boxes, manholes, and handholes use color-coding conductor tape. Identify source and circuit number of each set of conductors. For single conductor cables, identify phase in addition to the above.

D. Power-Circuit Conductor Identification, 600 V or Less: For conductors in vaults, pull and junction boxes, manholes, and handholes, use color-coding conductor tape to identify the phase.

1. Color-Coding for Phase and Voltage Level Identification, 600 V or Less: Use colors listed below for ungrounded service feeder and branch-circuit conductors.

a. Color shall be factory applied or field applied for sizes larger than No. 8 AWG, if authorities having jurisdiction permit.
b. Colors for 208/120-V Circuits:

1) Phase A: Black.
2) Phase B: Red.
3) Phase C: Blue.

c. Colors for 480/277-V Circuits:

1) Phase A: Brown.
2) Phase B: Orange.
3) Phase C: Yellow.

d. Field-Applied, Color-Coding Conductor Tape: Apply in half-lapped turns for a minimum distance of 6 inches from terminal points and in boxes where splices or taps are made. Apply last two turns of tape with no tension to prevent possible unwinding. Locate bands to avoid obscuring factory cable markings.

E. Install instructional sign including the color-code for grounded and ungrounded conductors using adhesive-film-type labels.

F. Control-Circuit Conductor Identification: For conductors and cables in pull and junction boxes, manholes, and handholes, use write-on tags with the conductor or cable designation, origin, and destination.

G. Control-Circuit Conductor Termination Identification: For identification at terminations provide heat-shrink preprinted tubes with the conductor designation.

H. Conductors to Be Extended in the Future: Attach write-on tags to conductors and list source.

I. Auxiliary Electrical Systems Conductor Identification: Identify field-installed alarm, control, and signal connections.

1. Identify conductors, cables, and terminals in enclosures and at junctions, terminals, and pull points. Identify by system and circuit designation.
2. Use system of marker tape designations that is uniform and consistent with system used by manufacturer for factory-installed connections.
3. Coordinate identification with Project Drawings, manufacturer's wiring diagrams, and the Operation and Maintenance Manual.

J. Locations of Underground Lines: Identify with underground-line detectable warning tape for power, lighting, communication, and control wiring and optical fiber cable.

1. Limit use of underground-line warning tape to direct-buried cables.
2. Install underground-line warning tape for both direct-buried cables and cables in raceway.

K. Workspace Indication: Install floor marking tape to show working clearances in the direction of access to live parts. Workspace shall be as required by NFPA 70 and 29 CFR 1926.403 unless otherwise indicated. Do not install at flush-mounted panelboards and similar

equipment in finished spaces.

L. Warning Labels for Indoor Cabinets, Boxes, and Enclosures for Power and Lighting: Self- adhesive warning labels.

1. Comply with 29 CFR 1910.145.
2. Identify system voltage with black letters on an orange background.
3. Apply to exterior of door, cover, or other access.

4. For equipment with multiple power or control sources, apply to door or cover of equipment including, but not limited to, the following:

a. Power transfer switches.
b. Controls with external control power connections.

M. Operating Instruction Signs: Install instruction signs to facilitate proper operation and maintenance of electrical systems and items to which they connect. Install instruction signs with approved legend where instructions are needed for system or equipment operation.

N. Emergency Operating Instruction Signs: Install instruction signs with white legend on a red background with minimum 3/8-inch- high letters for emergency instructions at equipment used for power transfer and load shedding.

O. Equipment Identification Labels: On each unit of equipment, install unique designation label that is consistent with wiring diagrams, schedules, and the Operation and Maintenance Manual. Apply labels to disconnect switches and protection equipment, central or master units, control panels, control stations, terminal cabinets, and racks of each system. Systems include power, lighting, control, communication, signal, monitoring, and alarm systems unless equipment is provided with its own identification.

1. Labeling Instructions:

a. Indoor Equipment: Unless otherwise indicated, provide a single line of text with 1/2-inch- high letters on 1-1/2-inch- high label; where two lines of text are required, use labels 2 inches high.
b. Outdoor Equipment: Engraved, laminated acrylic or melamine label Stenciled legend 4 inches high.
c. Elevated Components: Increase sizes of labels and letters to those appropriate for viewing from the floor.
d. Unless provided with self-adhesive means of attachment, fasten labels with appropriate mechanical fasteners that do not change the NEMA or NRTL rating of the enclosure.

2. Equipment to Be Labeled:

a. Panelboards, electrical cabinets, and enclosures.
b. Distribution panelboards and Switchboards – label each circuit breaker
c. Access doors and panels for concealed electrical items.
d. Electrical switchgear and switchboards.
e. Transformers.
f. Disconnect switches.

g. Voice and data cable terminal equipment.
h. Terminals, racks, and patch panels for voice and data communication and for signal and control functions.

3.3 INSTALLATION

Verify identity of each item before installing identification products.

END OF SECTION 260553

SECTION 260800 - COMMISSIONING OF ELECTRICAL SYSTEMS

PART 1 - GENERAL

1.1 RELATED DOCUMENTS

A. Drawings and general provisions of the Contract, including General and Supplementary Conditions and other Division 01 Specification Sections, apply to this Section.

1.2 SUMMARY

A. Section includes commissioning process requirements for the following MEP systems, assemblies, and equipment:

1. Lighting and Lighting controls.
2. Electrical and Electrically Powered equipment.

B. Related Requirements:

1. Section 019113 "General Commissioning Requirements" for general commissioning process requirements and Commissioning Coordinator responsibilities.

1.3 DEFINITIONS

A. Refer to Section 019113 "General Commissioning Requirements" for additional definitions and assignment of responsibilities.

1.4 CONTRACTOR'S RESPONSIBILITIES

A. Refer to Section 019113 "General Commissioning Requirements".

B. Perform commissioning tests at the direction of the CxA.

C. Attend construction phase controls coordination meeting.

D. Participate in electrical systems, assemblies, equipment, and component maintenance orientation and inspection.

E. Provide information requested by the CxA for final commissioning documentation.

F. Provide measuring instruments and logging devices to record test data, and provide data acquisition equipment to record data for complete range of testing for the required test period.

G. Provide Project-specific construction checklists and commissioning process test procedures for actual electrical systems, assemblies, equipment, and components to be furnished and installed as part of the construction contract.

H. Direct and coordinate commissioning testing among subcontractors, suppliers, and vendors.

I. Verify testing and adjusting of Work are complete.

J. Provide test data, inspection reports, and certificates in Systems Manual.

1.5 COMMISSIONING DOCUMENTATION

A. Provide the following information to the CxA for inclusion in the commissioning plan:

1. Plan for delivery and review of systems manuals, and other documents and reports.
2. Identification of installed systems, assemblies, equipment, and components including design changes that occurred during the construction phase.
3. Process and schedule for completing construction checklists and manufacturer's pre-start and startup checklists for electrical systems, assemblies, equipment, and components to be verified and tested.
4. Certificate of completion certifying that installation, pre-start checks, and startup procedures have been completed.
5. Certificate of readiness certifying that electrical systems, subsystems, equipment, and associated controls are ready for testing.
6. Test and inspection reports and certificates.
7. Corrective action documents.

1.6 INFORMATIONAL SUBMITTALS

A. Construction Checklists: See related Sections for technical requirements, and generate construction checklists for the following:

1. Revise list of construction checklists below to suit Project. Coordinate list with appropriate related Sections' content. Below are examples of common construction checklists.

2. Electrical lighting and lighting control systems.

B. Certificates of readiness.

C. Certificates of completion of installation, pre-start, and startup activities.

PART 2 - PRODUCTS (Not Used)

PART 3 - EXECUTION

3.1 GENERAL REQUIREMENTS

A. Refer to Section 019113 "General Commissioning Requirements".

3.2 SYSTEMS READINESS CHECKLISTS

A. Construction Checklists: Assist CxA in the preparation of detailed Systems Readiness checklists for systems, subsystems, equipment, and components.

1. Contributors to the development of checklists shall include, but are not limited to:
   a. Systems and equipment installers.
   b. Electrical and lighting technicians.
   c. Lighting controls installers.

B. Contractor shall conduct Systems Readiness Testing to document compliance with installation and Systems Readiness checklists prepared by Commissioning Authority for Division-26 items.

C. Refer to Section 019113 "General Commissioning Requirements" for issues relating to Systems Readiness checklists and testing, description of process, details on non-conformance issues relating to pre-functional checklists and test.

D. Contractor shall participate in Pre-Functional testing activities to document electrical work associated with mechanical and plumbing systems.

3.3 SYSTEM START-UP

A. Contractor is solely responsible for system start-up. CxA may, at his discretion, witness start up procedures, but will not perform any Functional Testing of systems until Contractor has completed start-up and resolved all operating deficiencies.

3.4 TESTING PREPARATION

A. Certify that electrical systems, subsystems, and equipment have been installed, calibrated, and started and are operating according to the Contract Documents.

B. Certify that electrical instrumentation and control systems have been completed and calibrated, that they are operating according to the Contract Documents and approved Shop Drawings and submittals, and that pretest set points have been recorded.

C. Set systems, subsystems, and equipment into operating mode to be tested according to approved test procedures (e.g., normal shutdown, normal auto position, normal manual position, unoccupied cycle, and alarm conditions).

D. Inspect and verify the position of each device and interlocks identified on checklists.

E. Check safety cutouts, alarms, and interlocks with smoke control and life-safety systems during each mode of operation.

F. Testing Instrumentation: Install measuring instruments and logging devices to record test data as required.

3.5 GENERAL TESTING REQUIREMENTS

A. Provide technicians, instrumentation, and tools to perform commissioning test at the direction of the CxA.

B. Test all operating modes, interlocks, control responses, and responses to abnormal or emergency conditions, and verify proper response of automation system controllers and sensors.

C. Tests will be performed using design conditions whenever possible.

D. Simulated conditions may need to be imposed using an artificial load when it is not practical to test under design conditions. Before simulating conditions, calibrate testing instruments. Provide equipment to simulate loads. Set simulated conditions as directed by the Contracting Officer and document simulated conditions and methods of simulation. After tests, return settings to normal operating conditions.

E. The CxA may direct that set points be altered when simulating conditions is not practical.

F. The CxA may direct that sensor values be altered with a signal generator when design or simulating conditions and altering set points are not practical.

G. If tests cannot be completed because of a deficiency outside the scope of the electrical system, document the deficiency and report it to the Owner. After deficiencies are resolved, reschedule tests.

H. If the testing plan indicates specific seasonal testing, complete appropriate initial performance tests and documentation and schedule seasonal tests.

3.6 FUNCTIONAL TEST PROCEDURES FOR SYSTEMS TO BE COMMISSIONED

A. General

1. The following paragraphs outline the functional test procedures for the various Div. 26 items to be commissioned. Functional testing will take place only after System Readiness checklists have been completed, equipment has been started-up, and Contractor has certified that systems are ready for functional testing.
2. All systems controlled via the Building Automation System shall have all control points and sequences tested by Controls Contractor prior to requesting testing by CX Authority.

3.7 COMMISSIONING TESTS

A. Lighting Systems:

1. Light Fixtures: Verify all lamps work without flicker.
2. Light Switches: Verify switches control lights per design
3. Lighting Controls: Verify Schedule and/or photocell controls

B. All Electrical and Electrically Powered Equipment:

1. Inspect electrical wiring and grounding for proper connection, color coding, and quality of installation.
2. Verify supply voltage, all hot legs.
3. Verify amperage is within allowable limits.
4. Inspect for physical damage proper installation, anchorage.
5. Verify equipment runs smoothly and quietly.
6. Verify operation of safeties.
7. Verify all required means of disconnect are in place.
8. Verify maintenance and NEC clearances are maintained.

C. Electrical Distribution System Switchboards and Panelboards:
1. Verify wiring connections are secure.
2. Verify ground wires are properly terminated.
3. Verify wiring color coding is correct.
4. Verify panel is properly identified.
5. Verify load identification is adequately descriptive of load.

D. Customized system readiness checklists and function testing requirements will be released after the submittal review phase.

3.8 TRAINING AND O&M MANUALS

A. Refer to Div. 26 specifications.

END OF SECTION 260800

SECTION 262200 - LOW-VOLTAGE TRANSFORMERS

PART 1 - GENERAL

1.1 RELATED DOCUMENTS

A. Drawings and general provisions of the Contract, including General and Supplementary Conditions and Division 01 Specification Sections, apply to this Section.

1.2 SUMMARY

A. Section Includes: Distribution and buck-boost dry-type transformers rated 600 V and less, with capacities up to 1500 kVA

B. Copper-wound transformers exceeding US Department of Energy 2016 mandated minimum efficiency. These transformers shall be UL listed to feed a K-7 electronic equipment load profile and be optimized to minimize opeating cost under light loading.

B. Compliance with full specification is required

C. Basic compliance with NEMA TP1/EPACT2005, NEMA Premium, CEE Tier 1, or CSL3 is not sufficient to meet this specification due to the following:

1. Efficiencies must exceed the US DOE 2016 minimum requirement
2. No load losses must comply with those defined in this specification
3. Efficiency at low load and under nonlinear K-7 load must meet the minimum requirements of this specification
4. K-7 listing per UL 1561 is required
5. Comprehensive testing under linear and nonlinear loading is required to verify specified performance
6. Performance submittals are required

D. Load Mix: Transformer shall be UL 1561 Listed to feed a mix of equipment load profiles suchas computers without de-rating or significant degradation of efficiency.

1.3 REFERENCES

A. US Department of Energy, 10 CFR Part 431, April 18, 2013. Energy Conservation Program: Energy Conservation Standards for Distribution Transformers; Final Rule

B. DOE Test Method for Measuring the Energy Consumption of Distribution Transformers under Appendix A to Subpart K of 10 CFR part 431.

C. ANSI/NEMA ST 20 - Dry Type Transformers for General Applications.

D. NEMA Premium Efficiency Transformers Program

E. Consortium for Energy Efficiency (CEE): Specification for Low-Voltage, Dry- Type Distribution Transformers

F. EPACT 2005 - United States Energy Policy Act 2005 / NEMA TP1 - Guide for Determining Energy Efficiency for Distribution Transformers

G. ANSI/NEMA TP-2 – Standard Test Method for Measuring Energy Consumption of Distribution Transformers

H. Metering Standards:

1. Computational algorithms per IEEE Std 1459-2000
2. UL 916, UL 61010C-1 CAT III

I. IEEE C57.110-1998 – IEEE Recommended Practice for establishing transformer capability when feeding nonsinusoidal load currents

J. IEEE Std C57.12.91-1995 Standard Test Code for Dry-Type Transformers

K. IEEE-1100 – Recommended Practice for Powering and Grounding Sensitive Electronic Equipment

L. LEED – Leadership in Energy and Environmental Design, U.S. Green Building Council.

M. Seismic Qualification References: International Building Code, 2006/2009 Edition, California Building Code, 2007/2010 Edition, ASCE Standard 7, 2005 Edition to OSHPD CAN 2-1708A.5, Rev. , ICC-ES AC 156, Effective 01/01/2007, OSHPD

N. ISO 9001:2008 – International Standards Organization - Quality Management System

O. ISO 14001:2004 – International Standards Organization - Environmental Management System

P. ISO 17025 – International Standards Organization - General requirements for the competence of testing and calibration laboratories

1.3 ACTION SUBMITTALS

A. Product Data: For each type of product.

1. Include construction details, material descriptions, dimensions of individual components and profiles, and finishes for each type and size of transformer.
2. Include rated nameplate data, capacities, weights, dimensions, minimum clearances, installed devices and features, and performance for each type and size of transformer.

B. Certified Test Reports

1. Provide test reports certified by factory test engineer for both transformer types and each kVA used on this project documenting compliance of previously manufactured units.
2. Provide details of factory ISO compliant production nonlinear load test
3. Provide performance under nonlinear load profile typical of modern electronic equipment

4. Provide NEMA TP2 test reports

C. Shop Drawings:

1. Detail equipment assemblies and indicate dimensions, weights, loads, required clearances, method of field assembly, components, and location and size of each field connection.
2. Vibration Isolation Base Details: Detail fabrication including anchorages and attachments to structure and to supported equipment.
3. Include diagrams for power, signal, and control wiring.

D. Qualification Data: For testing agency.

E. Source quality-control reports.

F. Field quality-control reports.

1.4 CLOSEOUT SUBMITTALS

A. Operation and Maintenance Data: For transformers to include in emergency, operation, and maintenance manuals.

1.5 MANUFACTURERS

A. Subject to compliance with requirements, manufacturers offering transformers that may be incorporated into the Work include the following:

1. Square D Co.
2. Eaton Corporation.
3. Siemens
4. General Electric ABB.

B. Source Limitations: Obtain each transformer type from single source from single manufacturer.

1.1 GENERAL TRANSFORMER REQUIREMENTS

A. Description: Factory-assembled and -tested, air-cooled units of types specified, designed for 60-Hz service.

B. Cores: Grain-oriented, non-aging silicon steel.

C. Coils: Continuous windings without splices, except for taps.

D. Internal Coil Connections: Brazed or pressure type.

E. Enclosure: Class complies with NEMA 250 for the environment in which installed.

F. Warranty: 1-year.

G. International Standard Organization registration

1. Registration to current ISO standard is required.
2. Independent annual audits are required.
3. Product shall be manufactured in registered facility
4. ISO 9001:2000 Registered – Quality Management System
5. ISO 14001:2004 Registered – Environmental Management System

H. Low-Sound-Level Units: NEMA ST 20 standard sound levels when factory tested according to IEEE C57.12.91. All units on this project to be sound level tested and meet the NEMA ST-20 levels.

I. Wall Brackets: Manufacturer's standard brackets.

1.2 GENERAL-PURPOSE DISTRIBUTION AND POWER TRANSFORMERS

A. Comply with NEMA ST 20 and list and label as complying with UL 1561.

B. Cores: One leg per phase.

C. Windings: One coil per phase in primary and secondary.

D. K-Factor rating: K-7

E. Exceed minimum efficiency requirements of US Department of Energy, 10 CFR Part 431, April 18, 2013, Energy Conservation Program: Energy Conservation Standards for Distribution Transformers; Final Rule which takes effect January 1, 2016, and comply with the table of Maximum No Load Losses, efficiency requirements at 1/6 load, efficiency at 35% load per 10 CFR Part 431, and efficiency at 25% load under a K-7 load profile.

kVA	No load losses (Watts)	Efficiency @ 1/6 load (%)	Efficiency @ 35% load (%)	Efficiency at 25% load under K-7 nonlinear load
15	47	97.85%	98.28	98.00%
30	71	98.27%	98.50	98.30%
45	97	98.40%	98.66	98.40%
75	135	98.63%	98.82	98.60%
112.5	195	98.70%	98.92	98.70%
150	235	98.80%	98.99	98.80%

F. Enclosure: Indoor, ventilated with lockable hinged door

G. Maximum Footprint for 115 degree C rise model in a NEMA 1 enclosure:

1. 18" Wide x 17" Deep x 27" High for 15kVA.
2. 26" Wide x 18" Deep x 30" High for 20, 30, 45kVA
3. 33" Wide x 22" Deep x 40" High for 50, 63, 75, 100, 112.5kVA
4. 38" Wide x 27" Deep x 48" High for 125,150, 175, 200kVA

H. Insulation Class: 185 or 220 deg C class for transformers 15 kVA or smaller; 220 deg C class for transformers larger than 15 kVA.

I. Rated Temperature Rise: 130 deg C maximum rise above 40 deg C.

J. Taps: For transformers 3 kVA and larger, full-capacity taps in high-voltage windings are as follows:

1. If all transformers have same voltage taps, select from 4 subparagraphs below. If taps vary, delete all and show on Drawings. First item is standard.
2. Taps, 3 through 25 kVA: Two 5-percent taps below rated high voltage.
3. Taps, 3 through 10 kVA: Two 5-percent taps below rated high voltage.
4. Taps, 15 through 500 kVA: Six 2.5-percent taps, 2 above and 4 below rated high voltage.

K. Electrostatic Shielding: Each winding is independently single shielded with a full-width copper electrostatic shield arranged to minimize interwinding capacitance.

1. Coil leads and terminal strips are arranged to minimize capacitive coupling between input and output connections.
2. Shield Terminal: Separate; marked "Shield" for grounding connection.
3. Capacitance: Shield limits capacitance between primary and secondary to a maximum of 33 picofarads over a frequency range of 20 Hz to 1 MHz.
4. Common-Mode Noise Attenuation: Minus 120 dB minimum, 0.5 to 1.5 kHz; minus 65 dB minimum, 1.5 to 100 kHz.
5. Normal-Mode Noise Attenuation: Minus 52 dB minimum, 1.5 to 10 kHz.

1.3 IDENTIFICATION DEVICES

A. Nameplates: Engraved, laminated-plastic or metal nameplate for each distribution and buck-boost transformer, mounted with corrosion-resistant screws. Nameplates and label products are specified in Section 260553 "Identification for Electrical Systems."

1.4 SOURCE QUALITY CONTROL

A. Test and inspect transformers according to IEEE C57.12.01 and IEEE C57.12.91.

1. Resistance measurements of all windings at the rated voltage connections and at all tap connections.
2. Ratio tests at the rated voltage connections and at all tap connections.
3. Phase relation and polarity tests at the rated voltage connections.
4. No load losses, and excitation current and rated voltage at the rated voltage connections.
5. Impedance and load losses at rated current and rated frequency at the rated voltage connections.
6. Applied and induced tensile tests.
7. Regulation and efficiency at rated load and voltage.
8. Insulation Resistance Tests:

a. High-voltage to ground.
b. Low-voltage to ground.
c. High-voltage to low-voltage.

9. Temperature tests.

B. Factory Sound-Level Tests: Conduct prototype sound-level tests on production-line products.

PART 2 - EXECUTION

2.1 EXAMINATION

A. Examine conditions for compliance with enclosure- and ambient-temperature requirements for each transformer.

B. Verify that field measurements are as needed to maintain working clearances required by NFPA 70 and manufacturer's written instructions.

C. Examine walls, floors, roofs, and concrete bases for suitable mounting conditions where transformers will be installed.

D. Verify that ground connections are in place and requirements in Section 260526 "Grounding and Bonding for Electrical Systems" have been met. Maximum ground resistance shall be 5 ohms at location of transformer.

E. Environment: Enclosures shall be rated for the environment in which they are located. Covers for NEMA 250, Type 4X enclosures shall not cause accessibility problems.

F. Proceed with installation only after unsatisfactory conditions have been corrected.

2.2 INSTALLATION

A. Install wall-mounted transformers level and plumb with wall brackets fabricated by transformer manufacturer.

1. Coordinate installation of wall-mounted and structure-hanging supports with actual transformer provided.

B. Install transformers level and plumb on a concrete base with vibration-dampening supports. Locate transformers away from corners and not parallel to adjacent wall surface.

C. Construct concrete bases according to Section 033000 "Cast-in-Place Concrete" or [Section 033053 "Miscellaneous Cast-in-Place Concrete" and anchor floor-mounted transformers according to manufacturer's written instructions and requirements in Section 260529 "Hangers and Supports for Electrical Systems."

1. Coordinate size and location of concrete bases with actual transformer provided. Cast anchor-bolt inserts into bases. Concrete, reinforcement, and formwork requirements are specified with concrete.

D. Secure transformer to concrete base according to manufacturer's written instructions.

E. Secure covers to enclosure and tighten all bolts to manufacturer-recommended torques to reduce noise generation.

F. Remove shipping bolts, blocking, and wedges.

2.3 CONNECTIONS

A. Ground equipment according to Section 260526 "Grounding and Bonding for Electrical Systems."

B. Connect wiring according to Section 260519 "Low-Voltage Electrical Power Conductors and Cables."

C. Tighten electrical connectors and terminals according to manufacturer's published torque-tightening values. If manufacturer's torque values are not indicated, use those specified in UL 486A-486B.

D. Provide flexible connections at all conduit and conductor terminations and supports to eliminate sound and vibration transmission to the building structure.

2.4 FIELD QUALITY CONTROL

A. Testing Agency: Engage a qualified testing agency to perform tests and inspections and prepare test reports.

B. Manufacturer's Field Service: Engage a factory-authorized service representative to inspect, test, and adjust components, assemblies, and equipment installations, including connections. Report results in writing.

C. Efficiency & Harmonic Performance Validation: To insure that the products shipped to the job site meet this specification, provide on-site revenue class accurate efficiency and harmonic measurements of transformers once installed and operating at customer's site. Data shall be collected from primary and secondary sides of the transformer simultaneously on a synchronized cycle-by-cycle basis. The use of two discrete meters that are not synchronized is not acceptable. Sampling shall be of 10% of transformers on the project once installed and operating, as selected by customer. Submit a detailed report to the project engineer.

D. Perform tests and inspections and prepare test reports.

1. Manufacturer's Field Service: Engage a factory-authorized service representative to inspect components, assemblies, and equipment installations, including connections, and to assist in testing.

E. Tests and Inspections:

1. Perform each visual and mechanical inspection and electrical test stated in NETA ATS for dry-type, air-cooled, low-voltage transformers. Certify compliance with test parameters.

F. Remove and replace units that do not pass tests or inspections and retest as specified above.

G. Infrared Scanning: Two months after Substantial Completion, perform an infrared scan of transformer connections.

1. Use an infrared-scanning device designed to measure temperature or detect significant deviations from normal values. Provide documentation of device calibration.
2. Perform two follow-up infrared scans of transformers, one at four months and the other at 11 months after Substantial Completion.
3. Prepare a certified report identifying transformer checked and describing results of scanning. Include notation of deficiencies detected, remedial action taken, and scanning observations after remedial action.

H. Test Labeling: On completion of satisfactory testing of each unit, attach a dated and signed "Satisfactory Test" label to tested component.

2.5 ADJUSTING

A. Record transformer secondary voltage at each unit for at least 48 hours of typical occupancy period. Adjust transformer taps to provide optimum voltage conditions at secondary terminals. Optimum is defined as not exceeding nameplate voltage plus 5 percent and not being lower than nameplate voltage minus 3 percent at maximum load conditions. Submit recording and tap settings as test results.

B. Connect buck-boost transformers to provide nameplate voltage of equipment being served, plus or minus 5 percent, at secondary terminals.

C. Output Settings Report: Prepare a written report recording output voltages and tap settings.

2.6 CLEANING

A. Vacuum dirt and debris; do not use compressed air to assist in cleaning.

END OF SECTION 262200

SECTION 262413 SWITCHBOARDS

PART 1 - GENERAL

1.1 RELATED DOCUMENTS

A. Drawings and general provisions of the Contract, including General and Supplementary Conditions and Division 01 Specification Sections, apply to this Section.

1.2 SUMMARY

A. Section Includes:

1. Service and distribution switchboards rated 600 V and less.
2. Disconnecting and overcurrent protective devices.
3. Instrumentation with BACNET interface.
4. Control power.
5. Accessory components and features.
6. Identification.
7. Mimic bus.
8. Engraved nameplates for each circuit breaker

1.3 ACTION SUBMITTALS

A. Product Data: For each switchboard, overcurrent protective device, surge protection device, ground-fault protector, accessory, and component.

1. Include dimensions and manufacturers' technical data on features, performance, electrical characteristics, ratings, accessories, and finishes.

B. Shop Drawings: For each switchboard and related equipment.

1. Include dimensioned plans, elevations, sections, and details, including required clearances and service space around equipment. Show tabulations of installed devices, equipment features, and ratings.
2. Detail enclosure types for types other than NEMA 250, Type 1.
3. Detail bus configuration, current, and voltage ratings.
4. Detail short-circuit current rating of switchboards and overcurrent protective devices.
5. Include descriptive documentation of optional barriers specified for electrical insulation and isolation.
6. Include evidence of NRTL listing for series rating of installed devices.
7. Detail features, characteristics, ratings, and factory settings of individual overcurrent protective devices and auxiliary components.
8. Include time-current coordination curves for each type and rating of overcurrent protective device included in switchboards. Submit on translucent log-log graft paper; include selectable ranges for each type of overcurrent protective device.
9. Include diagram and details of proposed mimic bus.
10. Include schematic and wiring diagrams for power, signal, and control wiring.

C. Samples: Representative portion of mimic bus with specified material and finish, for color selection.

1.4 INFORMATIONAL SUBMITTALS

A. Field Quality-Control Reports:

1. Test procedures used.
2. Test results that comply with requirements.
3. Results of failed tests and corrective action taken to achieve test results that comply with requirements.

1.5 CLOSEOUT SUBMITTALS

A. Operation and Maintenance Data: For switchboards and components to include in emergency, operation, and maintenance manuals.

1. In addition to items specified in Section 017823 "Operation and Maintenance Data," include the following:

a. Routine maintenance requirements for switchboards and all installed components.
b. Manufacturer's written instructions for testing and adjusting overcurrent protective devices.
c. Time-current coordination curves for each type and rating of overcurrent protective device included in switchboards. Submit on translucent log-log graft paper; include selectable ranges for each type of overcurrent protective device.

1.6 QUALITY ASSURANCE

A. Installer Qualifications: An employer of workers qualified as defined in NEMA PB 2.1 and trained in electrical safety as required by NFPA 70E.

B. Testing Agency Qualifications: Member company of NETA or an NRTL.

1. Testing Agency's Field Supervisor: Certified by NETA to supervise on-site testing.

1.7 DELIVERY, STORAGE, AND HANDLING

A. Deliver switchboards in sections or lengths that can be moved past obstructions in delivery path.

B. Remove loose packing and flammable materials from inside switchboards.

C. Handle and prepare switchboards for installation according to NEMA PB 2.1.

1.8 FIELD CONDITIONS

A. Installation Pathway: Remove and replace access fencing, doors, lift-out panels, and structures to provide pathway for moving switchboards into place.

B. Environmental Limitations:

1. Do not deliver or install switchboards until spaces are enclosed and weather tight, wet work in spaces is complete and dry, work above switchboards is complete, and HVAC system is operating and maintaining ambient temperature and humidity conditions at occupancy levels during the remainder of the construction period.
2. Rate equipment for continuous operation under the following conditions unless otherwise indicated:

    a. Ambient Temperature: Not exceeding 110 deg F.
    b. Altitude: Not exceeding 6600 feet.

C. Unusual Service Conditions: NEMA PB 2, as follows:

1. Ambient temperatures within limits specified.
2. Altitude not exceeding 6600 feet.

D. Interruption of Existing Electric Service: Do not interrupt electric service to facilities occupied by Owner or others unless permitted under the following conditions and then only after arranging to provide temporary electric service according to requirements indicated:

1. Notify Engineer/Owner no fewer than seven days in advance of proposed interruption of electric service.
2. Indicate method of providing temporary electric service.
3. Do not proceed with interruption of electric service without Engineer/Owner written permission.
4. Comply with NFPA 70E.

1.9 COORDINATION

A. Coordinate layout and installation of switchboards and components with other construction that penetrates walls or is supported by them, including electrical and other types of equipment, raceways, piping, encumbrances to workspace clearance requirements, and adjacent surfaces. Maintain required workspace clearances and required clearances for equipment access doors and panels.

B. Coordinate sizes and locations of concrete bases with actual equipment provided. Cast anchor-bolt inserts into bases. Concrete, reinforcement, and formwork requirements are specified with concrete.

1.10 WARRANTY

A. Manufacturer's Warranty: Manufacturer agrees to repair or replace switchboard enclosures, buswork, overcurrent protective devices, accessories, and factory installed interconnection wiring that fail in materials or workmanship within specified warranty period.

1. Warranty Period: Three years from date of Substantial Completion.

PART 2 - PRODUCTS

2.1 SWITCHBOARDS

A. Manufacturers: Subject to compliance with requirements, provide products by one of the following:

1. Square D Co.
2. Eaton Corporation.
3. Siemens
4. General Electric ABB

B. Source Limitations: Obtain switchboards, overcurrent protective devices, components, and accessories from single source from single manufacturer.

C. Product Selection for Restricted Space: Drawings indicate maximum dimensions for switchboards including clearances between switchboards and adjacent surfaces and other items. Comply with indicated maximum dimensions.

D. Electrical Components, Devices, and Accessories: Listed and labeled as defined in NFPA 70, by a qualified testing agency, and marked for intended location and application.

E. Comply with NEMA PB 2.

F. Comply with NFPA 70.

G. Comply with UL 891.

H. Front-Connected, Front-Accessible Switchboards:

1. Main Devices: Panel mounted.
2. Branch Devices: Panel mounted.
3. Sections front and rear aligned.

I. Front- and Side-Accessible Switchboards:

1. Main Devices: Fixed, individually mounted.
2. Branch Devices: Panel mounted.
3. Section Alignment: Front and Rear aligned.

J. Front- and Rear-Accessible Switchboards:

1. Main Devices: Fixed, individually mounted.
2. Branch Devices: Panel and fixed, individually mounted.
3. Sections front and rear aligned.

K. Nominal System Voltage: as noted on drawings.

L. Main-Bus Continuous: as noted on drawings.

M. Indoor Enclosures: Steel, NEMA 250, Type 1.

N. Enclosure Finish for Indoor Units: Factory-applied finish in manufacturer's standard gray finish over a rust-inhibiting primer on treated metal surface.

O. Outdoor Enclosures: Type 3R, painted stainless steel.

1. Finish: Factory-applied finish in manufacturer's standard color; undersurfaces treated with corrosion-resistant undercoating.
2. Enclosure: Downward, rearward sloping roof; bolt-on rear covers for each section, with provisions for padlocking.

P. Barriers: Between adjacent switchboard sections.

Q. Insulation and isolation for main bus of main section and main and vertical buses of feeder sections.

R. Service Entrance Rating: Switchboards intended for use as service entrance equipment shall contain from one to six service disconnecting means with overcurrent protection, a neutral bus with disconnecting link, a grounding electrode conductor terminal, and a main bonding jumper.

S. Bus Transition and Incoming Pull Sections: Matched and aligned with basic switchboard.

T. Removable, Hinged Rear Doors and Compartment Covers: Secured by captive thumb screws, for access to rear interior of switchboard.

U. Hinged Front Panels: Allow access to circuit breaker, metering, accessory, and blank compartments.

V. Pull Box on Top of Switchboard:

1. Adequate ventilation to maintain temperature in pull box within same limits as switchboard.
2. Set back from front to clear circuit-breaker removal mechanism.
3. Removable covers shall form top, front, and sides. Top covers at rear shall be easily removable for drilling and cutting.
4. Bottom shall be insulating, fire-resistive material with separate holes for cable drops into switchboard.
5. Cable supports shall be arranged to facilitate cabling and adequate to support cables indicated, including those for future installation.

W. Buses and Connections: Three phase, four wire unless otherwise indicated.

1. Provide phase bus arrangement A, B, C from front to back, top to bottom, and left to right when viewed from the front of the switchboard.
2. Phase- and Neutral-Bus Material: Hard-drawn copper of 98 percent conductivity, silver-plated.
3. Phase- and Neutral-Bus Material: Tin-plated, high-strength, electrical-grade aluminum alloy with tin-plated aluminum circuit-breaker line connections.
4. Copper feeder circuit-breaker line connections.
5. Tin-plated aluminum feeder circuit-breaker line connections.
6. Load Terminals: Insulated, rigidly braced, runback bus extensions, of same material as through buses, equipped with mechanical connectors for outgoing circuit conductors. Provide load terminals for future circuit-breaker positions at full-ampere rating of circuit-breaker position.
7. Ground Bus: Minimum-size required by UL 891, hard-drawn copper of 98 percent conductivity, equipped with mechanical connectors for feeder and branch-circuit ground conductors.
8. Main-Phase Buses and Equipment-Ground Buses: Uniform capacity for entire length of switchboard's main and distribution sections. Provide for future extensions from both ends.
9. Disconnect Links:

    a. Isolate neutral bus from incoming neutral conductors.
    b. Bond neutral bus to equipment-ground bus for switchboards utilized as service equipment or separately derived systems.
10. Neutral Buses: 100 percent of the ampacity of phase buses unless otherwise indicated, equipped with mechanical connectors for outgoing circuit neutral cables. Brace bus extensions for busway feeder neutral bus.
11. Isolation Barrier Access Provisions: Permit checking of bus-bolt tightness.

X. Future Devices: Equip compartments with mounting brackets, supports, bus connections, and appurtenances at full rating of circuit-breaker compartment.

Y. Bus-Bar Insulation: Factory-applied, flame-retardant, tape wrapping of individual bus bars or flame-retardant, spray-applied insulation. Minimum insulation temperature rating of 105 deg C.

2.2 DISCONNECTING AND OVERCURRENT PROTECTIVE DEVICES

A. Molded-Case Circuit Breaker (MCCB): Comply with UL 489, with interrupting capacity to meet available fault currents.

1. Thermal-Magnetic Circuit Breakers: Inverse time-current element for low-level overloads and instantaneous magnetic trip element for short circuits. Adjustable magnetic trip setting for circuit-breaker frame sizes 250 A and larger.
2. Electronic trip circuit breakers with rms sensing; field-replaceable rating plug or field-replicable electronic trip; and the following field-adjustable settings:

    a. Instantaneous trip.
    b. Long- and short-time pickup levels.
    c. Long and short time adjustments.
    d. Ground-fault pickup level, time delay, and I^2t response.

3. Current-Limiting Circuit Breakers: Frame sizes 400 A and smaller; let-through ratings less than NEMA FU 1, RK-5.
4. Ground-Fault Equipment Protection (GFEP) Circuit Breakers: Class B ground-fault protection (30-mA trip).

2.3 INSTRUMENTATION

A. Instrument Transformers: NEMA EI 21.1, and the following:

1. Potential Transformers: NEMA EI 21.1; 120 V, 60 Hz, [single] [tapped] [double] secondary; disconnecting type with integral fuse mountings. Burden and accuracy shall be consistent with connected metering and relay devices.
2. Current Transformers: NEMA EI 21.1; 5 A, 60 Hz, secondary; [wound] [bushing] [bar or window] type; [single] [double] secondary winding and secondary shorting device. Burden and accuracy shall be consistent with connected metering and relay devices.
3. Control-Power Transformers: Dry type, mounted in separate compartments for units larger than 3 kVA.
4. Current Transformers for Neutral and Ground-Fault Current Sensing: Connect secondary wiring to ground overcurrent relays, via shorting terminals, to provide selective tripping of main and tie circuit breaker. Coordinate with feeder circuit-breaker, ground-fault protection.
5. BACNET: provide to interface with BAS.

B. Multifunction Digital-Metering Monitor: Microprocessor-based unit suitable for three- or four-wire systems and with the following features:

1. Switch-selectable digital display of the following values with maximum accuracy tolerances as indicated:

   a. Phase Currents, Each Phase: Plus or minus 0.5 percent.
   b. Phase-to-Phase Voltages, Three Phase: Plus or minus 0.5 percent.
   c. Phase-to-Neutral Voltages, Three Phase: Plus or minus 0.5 percent.
   d. Megawatts: Plus or minus 1 percent.
   e. Megavars: Plus or minus 1 percent.
   f. Power Factor: Plus or minus 1 percent.
   g. Frequency: Plus or minus 0.1 percent.
   h. Accumulated Energy, Megawatt Hours: Plus or minus 1 percent; accumulated values unaffected by power outages up to 72 hours.
   i. Megawatt Demand: Plus or minus 1 percent; demand interval programmable from five to 60 minutes.
   j. Contact devices to operate remote impulse-totalizing demand meter.

2. Mounting: Display and control unit flush or semiflush mounted in instrument compartment door.

2.4 CONTROL POWER

A. Control Circuits: 120-V ac, supplied through secondary disconnecting devices from control-power transformer.

B. Control Wiring: Factory installed, with bundling, lacing, and protection included. Provide flexible conductors for No. 8 AWG and smaller, for conductors across hinges, and for conductors for interconnections between shipping units.

2.5 ACCESSORY COMPONENTS AND FEATURES

A. Accessory Set: Include tools and miscellaneous items required for overcurrent protective device test, inspection, maintenance, and operation.

B. Portable Test Set: For testing functions of solid-state trip devices without removing from switchboard. Include relay and meter test plugs suitable for testing switchboard meters and switchboard class relays.

2.6 IDENTIFICATION

A. Mimic Bus: Entire single-line switchboard bus work, as depicted on factory record drawing, on an engraved laminated-plastic (Gravoply) nameplate.

1. Nameplate: At least 0.0625-inch- thick laminated plastic (Gravoply), located at eye level on front cover of the switchboard incoming service section.

B. Mimic Bus: Continuously integrated mimic bus factory applied to front of switchboard. Arrange in single-line diagram format, using symbols and letter designations consistent with final mimic-bus diagram.

C. Coordinate mimic-bus segments with devices in switchboard sections to which they are applied. Produce a concise visual presentation of principal switchboard components and connections.

D. Presentation Media: Painted graphics in color contrasting with background color to represent bus and components, complete with lettered designations.

E. Service Equipment Label: NRTL labeled for use as service equipment for switchboards with one or more service disconnecting and overcurrent protective devices.

PART 3 - EXECUTION

3.1 EXAMINATION

A. Receive, inspect, handle, and store switchboards according to NEMA PB 2.1.

1. Lift or move switchboards with spreader bars and manufacturer-supplied lifting straps following manufacturer's instructions.
2. Use rollers, slings, or other manufacturer-approved methods if lifting straps are not furnished.
3. Protect from moisture, dust, dirt, and debris during storage and installation.
4. Install temporary heating during storage per manufacturer's instructions.

B. Examine switchboards before installation. Reject switchboards that are moisture damaged or physically damaged.

C. Examine elements and surfaces to receive switchboards for compliance with installation tolerances and other conditions affecting performance of the Work or that affect the performance of the equipment.

D. Proceed with installation only after unsatisfactory conditions have been corrected.

3.2 INSTALLATION

A. Install switchboards and accessories according to NEMA PB 2.1.

B. Equipment Mounting: Install switchboards on concrete base, 4-inch nominal thickness. Comply with requirements for concrete base specified in Section 033000 "Cast-in-Place Concrete."

1. Install conduits entering underneath the switchboard, entering under the vertical section where the conductors will terminate. Install with couplings flush with the concrete base. Extend 2 inches above concrete base after switchboard is anchored in place.
2. Install dowel rods to connect concrete base to concrete floor. Unless otherwise indicated, install dowel rods on 18-inch centers around the full perimeter of concrete base.
3. For supported equipment, install epoxy-coated anchor bolts that extend through concrete base and anchor into structural concrete floor.
4. Place and secure anchorage devices. Use setting drawings, templates, diagrams, instructions, and directions furnished with items to be embedded.
5. Install anchor bolts to elevations required for proper attachment to switchboards.
6. Anchor switchboard to building structure at the top of the switchboard if required or recommended by the manufacturer.

C. Temporary Lifting Provisions: Remove temporary lifting eyes, channels, straps and brackets, and temporary blocking of moving parts from switchboard units and components.

D. Operating Instructions: Frame and mount the printed basic operating instructions for switchboards, including control and key interlocking sequences and emergency procedures. Fabricate frame of finished wood or metal and cover instructions with clear acrylic plastic. Mount on front of switchboards.

E. Install filler plates in unused spaces of panel-mounted sections.

F. Install overcurrent protective devices, surge protection devices, and instrumentation.

1. Set field-adjustable switches and circuit-breaker trip ranges.

G. Install spare-fuse cabinet.

H. Comply with NECA 1.

3.3 CONNECTIONS

A. Bond conduits entering underneath the switchboard to the equipment ground bus with a bonding conductor sized per NFPA 70.

B. Support and secure conductors within the switchboard according to NFPA 70.

C. Extend insulated equipment grounding cable to busway ground connection and support cable at intervals in vertical run.

3.4 IDENTIFICATION

A. Identify field-installed conductors, interconnecting wiring, and components; provide warning signs complying with requirements for identification specified in Section 260553 "Identification for Electrical Systems."

B. Switchboard Nameplates: Label each switchboard compartment with a nameplate complying with requirements for identification specified in Section 260553 "Identification for Electrical Systems."

C. Device Nameplates: Label each disconnecting, and overcurrent protective device and each meter and control device mounted in compartment doors with a nameplate complying with requirements for identification specified in Section 260553 "Identification for Electrical Systems."

3.5 FIELD QUALITY CONTROL

A. Manufacturer's Field Service: Engage a factory-authorized service representative to inspect, test, and adjust components, assemblies, and equipment installations, including connections.

B. Perform the following tests and inspections with the assistance of a factory-authorized service representative:

1. Acceptance Testing:

    a. Test insulation resistance for each switchboard bus, component, connecting supply, feeder, and control circuit. Open control and metering circuits within the switchboard and remove neutral connection to surge protection and other electronic devices prior to insulation test. Reconnect after test.
    b. Test continuity of each circuit.

2. Test ground-fault protection of equipment for service equipment per NFPA 70.
3. Perform each visual and mechanical inspection and electrical test stated in NETA Acceptance Testing Specification. Certify compliance with test parameters.
4. Correct malfunctioning units on-site where possible, and retest to demonstrate compliance; otherwise, replace with new units and retest.
5. Perform the following infrared scan tests and inspections, and prepare reports:

a. Initial Infrared Scanning: After Substantial Completion, but not more than 60 days after Final Acceptance, perform an infrared scan of each switchboard. Remove front panels so joints and connections are accessible to portable scanner.
b. Follow-up Infrared Scanning: Perform an additional follow-up infrared scan of each switchboard 11 months after date of Substantial Completion.
c. Instruments and Equipment:

1) Use an infrared scanning device designed to measure temperature or to detect significant deviations from normal values. Provide calibration record for device.

6. Test and adjust controls, remote monitoring, and safeties. Replace damaged and malfunctioning controls and equipment.

C. Switchboard will be considered defective if it does not pass tests and inspections.

D. Prepare test and inspection reports, including a certified report that identifies switchboards included and that describes scanning results. Include notation of deficiencies detected, remedial action taken, and observations after remedial action.

3.6 ADJUSTING

A. Adjust moving parts and operable components to function smoothly, and lubricate as recommended by manufacturer.

B. Set field-adjustable circuit-breaker trip ranges as specified in Section 260573 "Overcurrent Protective Device Coordination Study."

3.7 PROTECTION

A. Temporary Heating: Apply temporary heat, to maintain temperature according to manufacturer's written instructions, until switchboard is ready to be energized and placed into service.

3.8 DEMONSTRATION

A. Engage a factory-authorized service representative to train Owner's maintenance personnel to adjust, operate, and maintain switchboards, overcurrent protective devices, instrumentation, and accessories, and to use and reprogram microprocessor-based trip, monitoring, and communication units.

END OF SECTION 262413

SECTION 262416 - PANELBOARDS

PART 1 - GENERAL

1.1 RELATED DOCUMENTS

A. Drawings and general provisions of the Contract, including General and Supplementary Conditions and Division 01 Specification Sections, apply to this Section.

1.2 SUMMARY

A. Section Includes:

1. Distribution panelboards.
2. Lighting and appliance branch-circuit panelboards.
3. Load centers.
4. Engraved nameplates for each circuit breaker on Power Panelboards

1.3 DEFINITIONS

A. ATS: Acceptance testing specification.

B. GFCI: Ground-fault circuit interrupter.

C. GFEP: Ground-fault equipment protection.

D. MCCB: Molded-case circuit breaker.

E. SPD: Surge protective device.

1.4 ACTION SUBMITTALS

A. Product Data: For each type of panelboard.

1. Include materials, switching and overcurrent protective devices, SPDs, accessories, and components indicated.
2. Include dimensions and manufacturers' technical data on features, performance, electrical characteristics, ratings, and finishes.

B. Shop Drawings: For each panelboard and related equipment.

1. Include dimensioned plans, elevations, sections, and details.
2. Show tabulations of installed devices with nameplates, conductor termination sizes, equipment features, and ratings.
3. Detail enclosure types including mounting and anchorage, environmental protection, knockouts, corner treatments, covers and doors, gaskets, hinges, and locks.
4. Detail bus configuration, current, and voltage ratings.
5. Short-circuit current rating of panelboards and overcurrent protective devices.

6. Include evidence of NRTL listing for series rating of installed devices.
7. Include evidence of NRTL listing for SPD as installed in panelboard.
8. Detail features, characteristics, ratings, and factory settings of individual overcurrent protective devices and auxiliary components.
9. Include wiring diagrams for power, signal, and control wiring.
10. Key interlock scheme drawing and sequence of operations.
11. Include time-current coordination curves for each type and rating of overcurrent protective device included in panelboards. Submit on translucent log-log graft paper; include selectable ranges for each type of overcurrent protective device. Include an Internet link for electronic access to downloadable PDF of the coordination curves.

1.5 INFORMATIONAL SUBMITTALS

A. Qualification Data: For testing agency.

B. Panelboard Schedules: For installation in panelboards. Submit final versions after load balancing.

1.6 CLOSEOUT SUBMITTALS

A. Operation and Maintenance Data: For panelboards and components to include in emergency, operation, and maintenance manuals. In addition to items specified in Section 017823 "Operation and Maintenance Data," include the following:

1. Manufacturer's written instructions for testing and adjusting overcurrent protective devices.
2. Time-current curves, including selectable ranges for each type of overcurrent protective device that allows adjustments.

1.7 MAINTENANCE MATERIAL SUBMITTALS

A. Furnish extra materials that match products installed and that are packaged with protective covering for storage and identified with labels describing contents.

1. Keys: Two spares for each type of panelboard cabinet lock.
2. Circuit Breakers Including GFCI and GFEP Types: See schedules on plans.

1.8 QUALITY ASSURANCE

A. Manufacturer Qualifications: ISO 9001 or 9002 certified.

1.9 DELIVERY, STORAGE, AND HANDLING

A. Remove loose packing and flammable materials from inside panelboards.

B. Handle and prepare panelboards for installation according to NEMA PB 1.

1.10 FIELD CONDITIONS

A. Environmental Limitations:

1. Do not deliver or install panelboards until spaces are enclosed and weathertight, wet work in spaces is complete and dry, work above panelboards is complete, and temporary HVAC system is operating and maintaining ambient temperature and humidity conditions at occupancy levels during the remainder of the construction period.
2. Rate equipment for continuous operation under the following conditions unless otherwise indicated:

a. Ambient Temperature: Not exceeding 23 deg F to plus 104 deg F.
b. Altitude: Not exceeding 6600 feet.

B. Service Conditions: NEMA PB 1, usual service conditions, as follows:

1. Ambient temperatures within limits specified.
2. Altitude not exceeding 6600 feet.

C. Interruption of Existing Electric Service: Do not interrupt electric service to facilities occupied by Owner or others unless permitted under the following conditions and then only after arranging to provide temporary electric service according to requirements indicated:

1. Notify Engineer no fewer than 7 days in advance of proposed interruption of electric service.
2. Do not proceed with interruption of electric service without Architect's, Construction Manager's and Owner's written permission.
3. Comply with NFPA 70E.

1.11 WARRANTY

A. Manufacturer's Warranty: Manufacturer agrees to repair or replace panelboards that fail in materials or workmanship within specified warranty period.

1. Panelboard Warranty Period: 18 months from date of Substantial Completion.

B. Special Warranty: Manufacturer's standard form in which manufacturer agrees to repair or replace SPD that fails in materials or workmanship within specified warranty period.

1. SPD Warranty Period: Five years from date of Substantial Completion.

PART 2 - PRODUCTS

2.1 MANUFACTURERS:

A. Manufacturers: Subject to compliance with requirements, provide products by one of the following:

1. Square D Co.

2. Eaton Corporation.
3. Siemens
4. General Electric ABB

2.2 PANELBOARDS COMMON REQUIREMENTS

A. Fabricate and test panelboards according to IEEE 344 to withstand seismic forces defined in Section 260548.16 "Seismic Controls for Electrical Systems."

B. Product Selection for Restricted Space: Drawings indicate maximum dimensions for panelboards including clearances between panelboards and adjacent surfaces and other items. Comply with indicated maximum dimensions.

C. Electrical Components, Devices, and Accessories: Listed and labeled as defined in NFPA 70, by a qualified testing agency, and marked for intended location and application.

D. Comply with NEMA PB 1.

E. Comply with NFPA 70.

F. Enclosures: Flush and Surface-mounted, dead-front cabinets.

1. Rated for environmental conditions at installed location.

    a. Indoor Dry and Clean Locations: NEMA 250, Type 1.
    b. Outdoor Locations: NEMA 250, Type 4XSS.

2. Height: 84 inches maximum.
3. Front: Secured to box with concealed trim clamps. For surface-mounted fronts, match box dimensions; for flush-mounted fronts, overlap box. Trims shall cover all live parts and shall have no exposed hardware.
4. Hinged Front Cover: Entire front trim hinged to box and with standard door within hinged trim cover. Trims shall cover all live parts and shall have no exposed hardware.
5. Skirt for Surface-Mounted Panelboards: Same gage and finish as panelboard front with flanges for attachment to panelboard, wall, and ceiling or floor.
6. Gutter Extension and Barrier: Same gage and finish as panelboard enclosure; integral with enclosure body. Arrange to isolate individual panel sections.
7. Finishes:

    a. Panels and Trim: Steel, factory finished immediately after cleaning and pretreating with manufacturer's standard two-coat, baked-on finish consisting of prime coat and thermosetting topcoat.
    b. Back Boxes: Same finish as panels and trim.

G. Incoming Mains:

1. Location: coordinated on the field by the electrical contractor.
2. Main Breaker: Main lug interiors up to 400 amperes shall be field convertible to main breaker.

H. Phase, Neutral, and Ground Buses:

1. Material: Hard-drawn copper, 98 percent conductivity.

    a. Plating shall run entire length of bus.
    b. Bus shall be fully rated the entire length.

2. Interiors shall be factory assembled into a unit. Replacing switching and protective devices shall not disturb adjacent units or require removing the main bus connectors.
3. Equipment Ground Bus: Adequate for feeder and branch-circuit equipment grounding conductors; bonded to box.
4. Full-Sized Neutral: Equipped with full-capacity bonding strap for service entrance applications. Mount electrically isolated from enclosure. Do not mount neutral bus in gutter.
5. Split Bus: Vertical buses divided into individual vertical sections.

I. Conductor Connectors: Suitable for use with conductor material and sizes.

1. Material: Hard-drawn copper, 98 percent conductivity.
2. Terminations shall allow use of 75 deg C rated conductors without derating.
3. Size: Lugs suitable for indicated conductor sizes, with additional gutter space, if required, for larger conductors.
4. Main and Neutral Lugs: Mechanical type, with a lug on the neutral bar for each pole in the panelboard.
5. Ground Lugs and Bus-Configured Terminators: Mechanical type, with a lug on the bar for each pole in the panelboard.
6. Subfeed (Double) Lugs: Mechanical type suitable for use with conductor material. Locate at same end of bus as incoming lugs or main device.
7. Gutter-Tap Lugs: Mechanical type suitable for use with conductor material and with matching insulating covers. Locate at same end of bus as incoming lugs or main device.

J. NRTL Label: Panelboards or load centers shall be labeled by an NRTL acceptable to authority having jurisdiction for use as service equipment with one or more main service disconnecting and overcurrent protective devices. Panelboards or load centers shall have meter enclosures, wiring, connections, and other provisions for utility metering. Coordinate with utility company for exact requirements.

K. Future Devices: Panelboards or load centers shall have mounting brackets, bus connections, filler plates, and necessary appurtenances required for future installation of devices.

L. Panelboard Short-Circuit Current Rating: Fully rated to interrupt symmetrical short-circuit current available at terminals. Assembly listed by an NRTL for 100 percent interrupting capacity.

1. Panelboards and overcurrent protective devices rated 240 V or less shall have short-circuit ratings as shown on Drawings, but not less than 10,000 A rms symmetrical.
2. Panelboards and overcurrent protective devices rated above 240 V and less than 600 V shall have short-circuit ratings as shown on Drawings, but not less than 14,000 A rms symmetrical.

2.3 PERFORMANCE REQUIREMENTS

A. Surge Suppression: Factory installed as an integral part of indicated panelboards, complying with UL 1449 SPD Type 1 or Type 2 (as noted on plans).

2.4 POWER PANELBOARDS

A. Panelboards: NEMA PB 1, distribution type.

B. Doors: Secured with vault-type latch with tumbler lock; keyed alike.

1. For doors more than 36 inches high, provide two latches, keyed alike.

C. Mains: Circuit breaker or Lugs only (as noted on plans).

D. Branch Overcurrent Protective Devices for Circuit-Breaker Frame Sizes 125 A and Smaller: Bolt-on circuit breakers.

E. Branch Overcurrent Protective Devices for Circuit-Breaker Frame Sizes Larger Than 125 A: Bolt-on circuit breakers.

2.5 LIGHTING AND APPLIANCE BRANCH-CIRCUIT PANELBOARDS

A. Panelboards: NEMA PB 1, lighting and appliance branch-circuit type.

B. Mains: Circuit breaker or Lugs only (as noted on plans).

C. Branch Overcurrent Protective Devices: Bolt-on circuit breakers, replaceable without disturbing adjacent units.

D. Doors: Concealed hinges; secured with flush latch with tumbler lock; keyed alike.

E. Doors: Door-in-door construction with concealed hinges; secured with multipoint latch with tumbler lock; keyed alike. Outer door shall permit full access to the panel interior. Inner door shall permit access to breaker operating handles and labeling, but current carrying terminals and bus shall remain concealed.

2.6 DISCONNECTING AND OVERCURRENT PROTECTIVE DEVICES

A. MCCB: Comply with UL 489, with interrupting capacity to meet available fault currents.

1. Thermal-Magnetic Circuit Breakers:

a. Inverse time-current element for low-level overloads.
b. Instantaneous magnetic trip element for short circuits.
c. Adjustable magnetic trip setting for circuit-breaker frame sizes 250 A and larger.

2. Adjustable Instantaneous-Trip Circuit Breakers: Magnetic trip element with front-mounted, field-adjustable trip setting.

3. Electronic Trip Circuit Breakers:

    a. RMS sensing.
    b. Field-replaceable rating plug or electronic trip.
    c. Digital display of settings, trip targets, and indicated metering displays.
    d. Multi-button keypad to access programmable functions and monitored data.
    e. Ten-event, trip-history log. Each trip event shall be recorded with type, phase, and magnitude of fault that caused the trip.
    f. Integral test jack for connection to portable test set or laptop computer.
    g. Field-Adjustable Settings:

        1) Instantaneous trip.
        2) Long- and short-time pickup levels.
        3) Long and short time adjustments.
        4) Ground-fault pickup level, time delay, and I squared T response.
4. GFCI Circuit Breakers: Single- and double-pole configurations with Class A ground-fault protection (6-mA trip).
5. GFEP Circuit Breakers: Class B ground-fault protection (30-mA trip).
6. Arc-Fault Circuit Interrupter Circuit Breakers: Comply with UL 1699; 120/240-V, single-pole configuration.
7. Subfeed Circuit Breakers: Vertically mounted.
8. MCCB Features and Accessories:

    a. Standard frame sizes, trip ratings, and number of poles.
    b. Breaker handle indicates tripped status.
    c. UL listed for reverse connection without restrictive line or load ratings.
    d. Lugs: Mechanical style, suitable for number, size, trip ratings, and conductor materials.
    e. Application Listing: Appropriate for application; Type SWD for switching LED lighting loads.
    f. Ground-Fault Protection: Integrally mounted relay and trip unit with adjustable pickup and time-delay settings, push-to-test feature, and ground-fault indicator.
    g. Shunt Trip: 120-V trip coil energized from separate circuit, set to trip at 75 percent of rated voltage.
    h. Undervoltage Trip: Set to operate at 35 to 75 percent of rated voltage without intentional with field-adjustable 0.1- to 0.6-second] time delay.
    i. Rating Plugs: Three-pole breakers with ampere ratings greater than 150 amperes shall have interchangeable rating plugs or electronic adjustable trip units.
    j. Auxiliary Contacts: Two, SPDT switches with "a" and "b" contacts; "a" contacts mimic circuit-breaker contacts and "b" contacts operate in reverse of circuit-breaker contacts.
    k. Alarm Switch: Single-pole, normally open contact that actuates only when circuit breaker trips.
    l. Key Interlock Kit: Externally mounted to prohibit circuit-breaker operation; key shall be removable only when circuit breaker is in off position.
    m. Zone-Selective Interlocking: Integral with electronic trip unit; for interlocking ground-fault protection function with other upstream or downstream devices.
    n. Multipole units enclosed in a factory assembled to operate as a single unit.
    o. Handle Padlocking Device: Fixed attachment, for locking circuit-breaker handle in on or off position.

p. Handle Clamp: Loose attachment, for holding circuit-breaker handle in on position.

2.7 IDENTIFICATION

A. Panelboard Label: Manufacturer's name and trademark, voltage, amperage, number of phases, and number of poles shall be located on the interior of the panelboard door.

B. Breaker Labels: Faceplate shall list current rating, UL and IEC certification standards, and AIC rating.

C. Circuit Directory: Computer-generated circuit directory card mounted inside panelboard door mounted in metal frame with transparent plastic protective cover.

1. The circuit directory shall identify specific purpose with sufficient detail to distinguish it from all other circuits.

2.8 ACCESSORY COMPONENTS AND FEATURES

A. Accessory Set: Include tools and miscellaneous items required for overcurrent protective device test, inspection, maintenance, and operation.

B. Portable Test Set: For testing functions of solid-state trip devices without removing them from panelboard. Include relay and meter test plugs suitable for testing panelboard meters and switchboard class relays.

PART 3 - EXECUTION

3.1 EXAMINATION

A. Verify actual conditions with field measurements prior to ordering panelboards to verify that equipment fits in allocated space in, and comply with, minimum required clearances specified in NFPA 70.

B. Receive, inspect, handle, and store panelboards according to NECA 407 and NEMA PB 1.1.

C. Examine panelboards before installation. Reject panelboards that are damaged, rusted, or have been subjected to water saturation.

D. Examine elements and surfaces to receive panelboards for compliance with installation tolerances and other conditions affecting performance of the Work.

E. Proceed with installation only after unsatisfactory conditions have been corrected.

3.2 INSTALLATION

A. Coordinate layout and installation of panelboards and components with other construction that penetrates walls or is supported by them, including electrical and other types of equipment, raceways, piping, encumbrances to workspace clearance requirements, and adjacent surfaces. Maintain required workspace clearances and required clearances for equipment access doors and panels.

B. Comply with NECA 1.

C. Install panelboards and accessories according to NECA 407 and NEMA PB 1.1.

D. Equipment Mounting:

1. Install panelboards on cast-in-place concrete equipment base(s). Comply with requirements for equipment bases and foundations specified in Section 033000 "Cast-in-Place Concrete." and or Section 033053 "Miscellaneous Cast-in-Place Concrete."
2. Attach panelboard to the vertical finished or structural surface behind the panelboard.

E. Temporary Lifting Provisions: Remove temporary lifting eyes, channels, and brackets and temporary blocking of moving parts from panelboards.

F. Mount top of trim 90 inches above finished floor unless otherwise indicated.

G. Mount panelboard cabinet plumb and rigid without distortion of box.

H. Mount recessed panelboards with fronts uniformly flush with wall finish and mating with back box.

I. Mounting panelboards with space behind is recommended for damp, wet, or dirty locations. The steel slotted supports in the following paragraph provide an even mounting surface and the recommended space behind to prevent moisture or dirt collection.

J. Mount surface-mounted panelboards to steel slotted supports 5/8 inch in depth. Orient steel slotted supports vertically.

K. Install overcurrent protective devices and controllers not already factory installed.

1. Set field-adjustable, circuit-breaker trip ranges.
2. Tighten bolted connections and circuit breaker connections using calibrated torque wrench or torque screwdriver per manufacturer's written instructions.

L. Make grounding connections and bond neutral for services and separately derived systems to ground. Make connections to grounding electrodes, separate grounds for isolated ground bars, and connections to separate ground bars.

M. Install filler plates in unused spaces.

N. Stub four 1-inch empty conduits from panelboard into accessible ceiling space or space designated to be ceiling space in the future.

O. Arrange conductors in gutters into groups and bundle and wrap with wire ties after completing load balancing.

3.3 IDENTIFICATION

A. Identify field-installed conductors, interconnecting wiring, and components; install warning signs complying with requirements in Section 260553 "Identification for Electrical Systems."

B. Create a directory to indicate installed circuit loads after balancing panelboard loads; incorporate Owner's final room designations. Obtain approval before installing. Handwritten directories are not acceptable. Install directory inside panelboard door.

C. Panelboard Nameplates: Label each panelboard with a nameplate complying with requirements for identification specified in Section 260553 "Identification for Electrical Systems."

D. Device Nameplates: Label each branch circuit device in Power Panelboards with a nameplate complying with requirements for identification specified in Section 260553 "Identification for Electrical Systems."

E. Install warning signs complying with requirements in Section 260553 "Identification for Electrical Systems" identifying source of remote circuit.

3.4 FIELD QUALITY CONTROL

A. Manufacturer's Field Service: Engage a factory-authorized service representative to inspect, test, and adjust components, assemblies, and equipment installations, including connections.

B. Perform tests and inspections.

1. Manufacturer's Field Service: Engage a factory-authorized service representative to inspect components, assemblies, and equipment installations, including connections, and to assist in testing.

C. Acceptance Testing Preparation:

1. Test insulation resistance for each panelboard bus, component, connecting supply, feeder, and control circuit.
2. Test continuity of each circuit.

D. Tests and Inspections:

1. Perform each visual and mechanical inspection and electrical test for low-voltage air circuit breakers and low-voltage surge arrestors stated in NETA ATS, Paragraph 7.6 Circuit Breakers and Paragraph 7.19.1 Surge Arrestors, Low-Voltage. Certify compliance with test parameters.
2. Correct malfunctioning units on-site, where possible, and retest to demonstrate compliance; otherwise, replace with new units and retest.
3. Perform the following infrared scan tests and inspections and prepare reports:

a. Initial Infrared Scanning: After Substantial Completion, but not more than 60 days after Final Acceptance, perform an infrared scan of each panelboard. Remove front panels so joints and connections are accessible to portable scanner.
b. Follow-up Infrared Scanning: Perform an additional follow-up infrared scan of each panelboard 11 months after date of Substantial Completion.
c. Instruments and Equipment:

1) Use an infrared scanning device designed to measure temperature or to detect significant deviations from normal values. Provide calibration record for device.

E. Panelboards will be considered defective if they do not pass tests and inspections.

F. Prepare test and inspection reports, including a certified report that identifies panelboards included and that describes scanning results, with comparisons of the two scans. Include notation of deficiencies detected, remedial action taken, and observations after remedial action.

3.5 ADJUSTING

A. Adjust moving parts and operable components to function smoothly, and lubricate as recommended by manufacturer.

B. Set field-adjustable circuit-breaker trip ranges as specified in Section 260573 "Overcurrent Protective Device Coordination Study."

C. Load Balancing: After Substantial Completion, but not more than 60 days after Final Acceptance, measure load balancing and make circuit changes. Prior to making circuit changes to achieve load balancing, inform Engineer of effect on phase color coding.

1. Measure loads during period of normal facility operations.
2. Perform circuit changes to achieve load balancing outside normal facility operation schedule or at times directed by the Engineer. Avoid disrupting services such as fax machines and on-line data processing, computing, transmitting, and receiving equipment.
3. After changing circuits to achieve load balancing, recheck loads during normal facility operations. Record load readings before and after changing circuits to achieve load balancing.
4. Tolerance: Maximum difference between phase loads, within a panelboard, shall not exceed 20 percent.

3.6 PROTECTION

A. Temporary Heating: Prior to energizing panelboards, apply temporary heat to maintain temperature according to manufacturer's written instructions.

END OF SECTION 262416

SECTION 262713 - ELECTRICITY METERING

PART 1 - GENERAL

1.1 RELATED DOCUMENTS

A. Drawings and general provisions of the Contract, including General and Supplementary Conditions and Division 01 Specification Sections, apply to this Section.

1.2 SUMMARY

A. Section includes equipment for electricity metering by utility company.

1.3 DEFINITIONS

A. KY Pulse: Term used by the metering industry to describe a method of measuring consumption of electricity that is based on a relay opening and closing in response to the rotation of the disk in the meter.

1.4 ACTION SUBMITTALS

A. Product Data: For each type of product indicated.

B. Shop Drawings: For electricity-metering equipment.

1. Dimensioned plans and sections or elevation layouts.
2. Wiring Diagrams: For power, signal, and control wiring. Identify terminals and wiring designations and color-codes to facilitate installation, operation, and maintenance. Indicate recommended types, wire sizes, and circuiting arrangements for field-installed wiring, and show circuit protection features.

1.5 INFORMATIONAL SUBMITTALS

A. Field quality-control reports.

1.6 QUALITY ASSURANCE

A. Electrical Components, Devices, and Accessories: Listed and labeled as defined in NFPA 70, by a qualified testing agency, and marked for intended location and application.

1.7 DELIVERY, STORAGE, AND HANDLING

A. Receive, store, and handle modular meter center according to NECA 400.

SECTION 262713 - ELECTRICITY METERING

1.8 PROJECT CONDITIONS

A. Interruption of Existing Electrical Service: Do not interrupt electrical service to facilities occupied by Owner or others unless permitted under the following conditions and then only after arranging to provide temporary electrical service according to requirements indicated:

1. Notify Engineer no fewer than 5 days in advance of proposed interruption of electrical service.
2. Do not proceed with interruption of electrical service without Architect's written permission.

1.9 COORDINATION

A. Electrical Service Connections: Coordinate with utility companies and components they furnish as follows:

1. Comply with requirements of utilities providing electrical power services.
2. Coordinate installation and connection of utilities and services, including provision for electricity-metering components.

PART 2 - PRODUCTS

2.1 EQUIPMENT FOR ELECTRICITY METERING BY UTILITY COMPANY

A. Meters will be furnished by utility company.

B. Current-Transformer Cabinets: Comply with requirements of electrical-power utility company.

C. Meter Sockets: Comply with requirements of electrical-power utility company.

D. Meter Sockets: Steady-state and short-circuit current ratings shall meet indicated circuit ratings.

PART 3 - EXECUTION

3.1 INSTALLATION

A. Comply with equipment installation requirements in NECA 1.

B. Install meters furnished by utility company. Install raceways and equipment according to utility company's written requirements. Provide empty conduits for metering leads and extend grounding connections as required by utility company.

3.2 IDENTIFICATION

A. Comply with requirements for identification specified in Section 260553 "Identification for Electrical Systems."

1. Series Combination Warning Label: Self-adhesive type, with text as required by NFPA 70.
2. Equipment Identification Labels: Adhesive film labels with clear protective overlay. For residential meters, provide an additional card holder suitable for printed, weather-resistant card with occupant's name.

3.3 FIELD QUALITY CONTROL

A. Perform tests and inspections.

1. Manufacturer's Field Service: Engage a factory-authorized service representative to inspect components, assemblies, and equipment installations, including connections, and to assist in testing.

END OF SECTION 262713

SECTION 262726 - WIRING DEVICES

PART 1 - GENERAL

1.1 RELATED DOCUMENTS

A. Drawings and general provisions of the Contract, including General and Supplementary Conditions and Division 01 Specification Sections, apply to this Section.

1.2 SUMMARY

A. Section Includes:

1. Receptacles, receptacles with integral GFCI, and associated device plates.
2. Tamper-resistant receptacles.
3. Weather-resistant receptacles.
4. Snap switches.

1.3 DEFINITIONS

A. GFCI: Ground-fault circuit interrupter.

B. Pigtail: Short lead used to connect a device to a branch-circuit conductor.

1.4 ACTION SUBMITTALS

A. Product Data: For each type of product.

B. Shop Drawings: List of legends and description of materials and processes used for premarking wall plates.

1.5 INFORMATIONAL SUBMITTALS

A. Field quality-control reports.

1.6 CLOSEOUT SUBMITTALS

A. Operation and Maintenance Data: For wiring devices to include in all manufacturers' packing-label warnings and instruction manuals that include labeling conditions.

SECTION 262726 - WIRING DEVICES

PART 2 - PRODUCTS

2.1 MANUFACTURERS

A. Manufacturers' Names: Shortened versions (shown in parentheses) of the following manufacturers' names are used in other Part 2 articles:
   1. Cooper Wiring Devices; a division of Eaton.
   2. Wiring Device-Kellems; a division of Hubbell.
   3. Leviton Mfg. Company Inc.
   4. Pass & Seymour; a division of LeGrand.

2.2 GENERAL WIRING-DEVICE REQUIREMENTS

A. Wiring Devices, Components, and Accessories: Listed and labeled as defined in NFPA 70, by a qualified testing agency, and marked for intended location and application.

B. Comply with NFPA 70.

C. Devices that are manufactured for use with modular plug-in connectors may be substituted under the following conditions:

   1. Connectors shall comply with UL 2459 and shall be made with stranding building wire.
   2. Devices shall comply with the requirements in this Section.

2.3 STRAIGHT-BLADE RECEPTACLES

A. Convenience Receptacles, 125 V, 20 A: Comply with NEMA WD 1, NEMA WD 6 Configuration 5-20R, UL 498, and FS W-C-596.

B. Tamper-Resistant Convenience Receptacles, 125 V, 20 A: Comply with NEMA WD 1, NEMA WD 6 Configuration 5-20R, UL 498 Supplement sd, and FS W-C-596.

   1. Description: Labeled shall comply with NFPA 70, "Health Care Facilities" Article, "Pediatric Locations" Section.

2.4 GFCI RECEPTACLES

A. General Description:

   1. Straight blade, feed-through type.
   2. Comply with NEMA WD 1, NEMA WD 6, UL 498, UL 943 Class A, and FS W-C-596.
   3. Include indicator light that shows when the GFCI has malfunctioned and no longer provides proper GFCI protection.

B. Duplex GFCI Convenience Receptacles, 125 V, 20 A:

C. Tamper-Resistant GFCI Convenience Receptacles, 125 V, 20 A:

2.5 TOGGLE SWITCHES

A. Comply with NEMA WD 1, UL 20, and FS W-S-896.

B. Switches, 120/277 V, 20 A:

1. Single Pole
2. Two Pole
3. Three Way
4. Four Way

C. Weatherproof Wall Plates: Cast aluminum, neoprene gasket, stainless steel spring and hinge pin.

2.6 WALL PLATES

A. Single and combination types shall match corresponding wiring devices.

1. Plate-Securing Screws: Tamper proof metal with head color to match plate finish.
2. Material for Finished Spaces: Type 302 stainless steel, 0.04-inch thick.
3. Material for Damp Locations: Cast aluminum with spring-loaded lift cover, and listed and labeled for use in wet and damp locations.

B. Wet-Location, Weatherproof Cover Plates: NEMA 250, complying with Type 3R, weather-resistant, die-cast aluminum with lockable cover.

2.7 FINISHES

A. Device Color:

1. Wiring Devices Connected to Normal Power System: White.

PART 3 - EXECUTION

3.1 INSTALLATION

A. Comply with NECA 1, including mounting heights listed in that standard, unless otherwise indicated.

B. Coordination with Other Trades:

1. Protect installed devices and their boxes. Do not place wall finish materials over device boxes and do not cut holes for boxes with routers that are guided by riding against outside of boxes.
2. Keep outlet boxes free of plaster, drywall joint compound, mortar, cement, concrete, dust, paint, and other material that may contaminate the raceway system, conductors, and cables.

3. Install device boxes in brick or block walls so that the cover plate does not cross a joint unless the joint is troweled flush with the face of the wall.
4. Install wiring devices after all wall preparation, including painting, is complete.

C. Conductors:

1. Do not strip insulation from conductors until right before they are spliced or terminated on devices.
2. Strip insulation evenly around the conductor using tools designed for the purpose. Avoid scoring or nicking of solid wire or cutting strands from stranded wire.
3. The length of free conductors at outlets for devices shall meet provisions of NFPA 70, Article 300, without pigtails.

D. Device Installation:

1. Replace devices that have been in temporary use during construction and that were installed before building finishing operations were complete.
2. Keep each wiring device in its package or otherwise protected until it is time to connect conductors.
3. Do not remove surface protection, such as plastic film and smudge covers, until the last possible moment.
4. Connect devices to branch circuits using pigtails that are not less than 6 inches in length.
5. When there is a choice, use side wiring with binding-head screw terminals. Wrap solid conductor tightly clockwise, two-thirds to three-fourths of the way around terminal screw.
6. Use a torque screwdriver when a torque is recommended or required by manufacturer.
7. When conductors larger than No. 12 AWG are installed on 15- or 20-A circuits, splice No. 12 AWG pigtails for device connections.
8. Tighten unused terminal screws on the device.
9. When mounting into metal boxes, remove the fiber or plastic washers used to hold device-mounting screws in yokes, allowing metal-to-metal contact.

E. Receptacle Orientation:

1. Install ground pin of vertically mounted receptacles up, and on horizontally mounted receptacles to the right.
2. Install hospital-grade receptacles in patient-care areas with the ground pin or neutral blade at the top.

F. Device Plates: Do not use oversized or extra-deep plates. Repair wall finishes and remount outlet boxes when standard device plates do not fit flush or do not cover rough wall opening.

G. Arrangement of Devices: Unless otherwise indicated, mount flush, with long dimension vertical and with grounding terminal of receptacles on top. Group adjacent switches under single, multigang wall plates.

3.2 GFCI RECEPTACLES

A. Install non-feed-through-type GFCI receptacles where protection of downstream receptacles is not required.

3.3 IDENTIFICATION

A. Comply with Section 260553 "Identification for Electrical Systems."

B. Identify each receptacle with panelboard identification and circuit number. Use hot, stamped, or engraved machine printing with black -filled lettering on face of plate, and durable wire markers or tags inside outlet boxes.

3.4 FIELD QUALITY CONTROL

A. Perform the following tests and inspections with the assistance of a factory-authorized service representative:
   1. Test Instruments: Use instruments that comply with UL 1436.
   2. Test Instrument for Convenience Receptacles: Digital wiring analyzer with digital readout or illuminated digital-display indicators of measurement.

B. Tests for Convenience Receptacles:

   1. Line Voltage: Acceptable range is 105 to 132 V.
   2. Percent Voltage Drop under 15-A Load: A value of 6 percent or higher is unacceptable.
   3. Ground Impedance: Values of up to 2 ohms are acceptable.
   4. GFCI Trip: Test for tripping values specified in UL 1436 and UL 943.
   5. Using the test plug, verify that the device and its outlet box are securely mounted.
   6. Tests shall be diagnostic, indicating damaged conductors, high resistance at the circuit breaker, poor connections, inadequate fault current path, defective devices, or similar problems. Correct circuit conditions, remove malfunctioning units and replace with new ones, and retest as specified above.

C. Test straight-blade convenience outlets in patient-care area and hospital-grade convenience outlets for the retention force of the grounding blade according to NFPA 99. Retention force shall be not less than 4 oz.

D. Wiring device will be considered defective if it does not pass tests and inspections.

E. Prepare test and inspection reports.

END OF SECTION 262726

SECTION 262816 - ENCLOSED SWITCHES AND CIRCUIT BREAKERS

PART 1 - GENERAL

1.1 RELATED DOCUMENTS

A. Drawings and general provisions of the Contract, including General and Supplementary Conditions and other Division 01 Specification Sections, apply to this Section.

1.2 SUMMARY

A. Section Includes:

1. Fusible switches.
2. Nonfusible switches.
3. Enclosures.

1.3 DEFINITIONS

A. NC: Normally closed.

B. NO: Normally open.

1.4 ACTION SUBMITTALS

A. Product Data: For each type of enclosed switch, circuit breaker, accessory, and component indicated. Include dimensioned elevations, sections, weights, and manufacturers' technical data on features, performance, electrical characteristics, ratings, accessories, and finishes.

1. Enclosure types and details for types other than NEMA 250, Type 1.
2. Current and voltage ratings.
3. Short-circuit current ratings (interrupting and withstand, as appropriate).
4. Include evidence of NRTL listing for series rating of installed devices.
5. Detail features, characteristics, ratings, and factory settings of individual overcurrent protective devices, accessories, and auxiliary components.
6. Include time-current coordination curves (average melt) for each type and rating of overcurrent protective device; include selectable ranges for each type of overcurrent protective device.

B. Shop Drawings: For enclosed switches and circuit breakers. Include plans, elevations, sections, details, and attachments to other work.

1. Wiring Diagrams: For power, signal, and control wiring.

1.5 INFORMATIONAL SUBMITTALS

A. Qualification Data: For qualified testing agency.

B. Seismic Qualification Certificates: For enclosed switches and circuit breakers, accessories, and components, from manufacturer.

1. Basis for Certification: Indicate whether withstand certification is based on actual test of assembled components or on calculation.
2. Dimensioned Outline Drawings of Equipment Unit: Identify center of gravity and locate and describe mounting and anchorage provisions.
3. Detailed description of equipment anchorage devices on which the certification is based and their installation requirements.

C. Field quality-control reports.

1. Test procedures used.
2. Test results that comply with requirements.
3. Results of failed tests and corrective action taken to achieve test results that comply with requirements.

D. Manufacturer's field service report.

1.6 CLOSEOUT SUBMITTALS

A. Operation and Maintenance Data: For enclosed switches and circuit breakers to include in emergency, operation, and maintenance manuals. In addition to items specified in Section 017823 "Operation and Maintenance Data," include the following:

1. Manufacturer's written instructions for testing and adjusting enclosed switches and circuit breakers.
2. Time-current coordination curves (average melt) for each type and rating of overcurrent protective device; include selectable ranges for each type of overcurrent protective device. Submit on translucent log-log graph paper.

1.7 QUALITY ASSURANCE

A. Testing Agency Qualifications: Member Company of NETA or an NRTL.

1. Testing Agency's Field Supervisor: Currently certified by NETA to supervise on-site testing.

B. Source Limitations: Obtain enclosed switches and circuit breakers, overcurrent protective devices, components, and accessories, within same product category, from single source from single manufacturer.

C. Product Selection for Restricted Space: Drawings indicate maximum dimensions for enclosed switches and circuit breakers, including clearances between enclosures, and adjacent surfaces and other items. Comply with indicated maximum dimensions.

D. Electrical Components, Devices, and Accessories: Listed and labeled as defined in NFPA 70, by a qualified testing agency, and marked for intended location and application.

E. Comply with NFPA 70.

1.8 PROJECT CONDITIONS

A. Environmental Limitations: Rate equipment for continuous operation under the following conditions unless otherwise indicated:

1. Ambient Temperature: Not less than minus 22 deg F and not exceeding 104 deg F.
2. Altitude: Not exceeding 6600 feet.

B. Interruption of Existing Electric Service: Do not interrupt electric service to facilities occupied by Owner or others unless permitted under the following conditions and then only after arranging to provide temporary electric service according to requirements indicated:

1. Notify Engineer and or Construction Manager no fewer than seven days in advance of proposed interruption of electric service.
2. Indicate method of providing temporary electric service.
3. Do not proceed with interruption of electric service without Architect's or Construction Manager's written permission.
4. Comply with NFPA 70E.

1.9 COORDINATION

A. Coordinate layout and installation of switches, circuit breakers, and components with equipment served and adjacent surfaces. Maintain required workspace clearances and required clearances for equipment access doors and panels.

PART 2 - PRODUCTS

2.1 MANUFACTURERS:

A. Manufacturers: Subject to compliance with requirements, provide products by one of the following:

1. Square D Co.
2. Eaton Corporation.
3. Siemens
4. General Electric ABB

2.2 FUSIBLE SWITCHES

A. Type HD, Heavy Duty, Single Throw, 240 or 600-V ac (as per connected voltage), 1200 A and Smaller: UL 98 and NEMA KS 1, horsepower rated, with clips or bolt pads to accommodate

indicated fuses, lockable handle with capability to accept three padlocks, and interlocked with cover in closed position.

B. Accessories:

1. Equipment Ground Kit: Internally mounted and labeled for copper and aluminum ground conductors.
2. Neutral Kit: Internally mounted; insulated, capable of being grounded and bonded; labeled for copper and aluminum neutral conductors.
3. Class R Fuse Kit: Provides rejection of other fuse types when Class R fuses are specified.
4. Hookstick Handle: Allows use of a hookstick to operate the handle.
5. Lugs: Mechanical type, suitable for number, size, and conductor material.
6. Service-Rated Switches: Labeled for use as service equipment.

2.3 NONFUSIBLE SWITCHES

A. Type HD, Heavy Duty, Single Throw, 240 or 600-V ac (as per connected voltage), 1200 A and Smaller: UL 98 and NEMA KS 1, horsepower rated, lockable handle with capability to accept three padlocks, and interlocked with cover in closed position.

B. Accessories:

1. Equipment Ground Kit: Internally mounted and labeled for copper and aluminum ground conductors.
2. Neutral Kit: Internally mounted; insulated, capable of being grounded and bonded; labeled for copper and aluminum neutral conductors.
3. Hookstick Handle: Allows use of a hookstick to operate the handle.
4. Lugs: Mechanical type, suitable for number, size, and conductor material.

2.4 ENCLOSURES

A. Enclosed Switches and Circuit Breakers: NEMA AB 1, NEMA KS 1, NEMA 250, and UL 50, to comply with environmental conditions at installed location.

1. Indoor, Dry and Clean Locations: NEMA 250, Type 1.
2. Outdoor Locations: NEMA 250, Type 4XSS.

PART 3 - EXECUTION

3.1 EXAMINATION

A. Examine elements and surfaces to receive enclosed switches and circuit breakers for compliance with installation tolerances and other conditions affecting performance of the Work.

B. Proceed with installation only after unsatisfactory conditions have been corrected.

3.2 INSTALLATION

A. Install individual wall-mounted switches and circuit breakers with tops at uniform height unless otherwise indicated.

B. Comply with mounting and anchoring requirements specified in Section 260548.16 "Seismic Controls for Electrical Systems."

C. Temporary Lifting Provisions: Remove temporary lifting eyes, channels, and brackets and temporary blocking of moving parts from enclosures and components.

D. Install fuses in fusible devices.

E. Comply with NECA 1.

3.3 IDENTIFICATION

A. Comply with requirements in Section 260553 "Identification for Electrical Systems."

1. Identify field-installed conductors, interconnecting wiring, and components; provide warning signs.
2. Label each enclosure with engraved metal or laminated-plastic nameplate.

3.4 FIELD QUALITY CONTROL

A. Perform tests and inspections.

1. Manufacturer's Field Service: Engage a factory-authorized service representative to inspect components, assemblies, and equipment installations, including connections, and to assist in testing.

B. Acceptance Testing Preparation:

1. Test insulation resistance for each enclosed switch and circuit breaker, component, connecting supply, feeder, and control circuit.
2. Test continuity of each circuit.

C. Tests and Inspections:

1. Perform each visual and mechanical inspection and electrical test stated in NETA Acceptance Testing Specification. Certify compliance with test parameters.
2. Correct malfunctioning units on-site, where possible, and retest to demonstrate compliance; otherwise, replace with new units and retest.
3. Perform the following infrared scan tests and inspections and prepare reports:

a. Initial Infrared Scanning: After Substantial Completion, but not more than 60 days after Final Acceptance, perform an infrared scan of each enclosed switch and circuit breaker. Remove front panels so joints and connections are accessible to portable scanner.

b. Follow-up Infrared Scanning: Perform an additional follow-up infrared scan of each enclosed switch and circuit breaker 11 months after date of Substantial Completion.
c. Instruments and Equipment: Use an infrared scanning device designed to measure temperature or to detect significant deviations from normal values. Provide calibration record for device.

4. Test and adjust controls, remote monitoring, and safeties. Replace damaged and malfunctioning controls and equipment.

D. Enclosed switches and circuit breakers will be considered defective if they do not pass tests and inspections.

E. Prepare test and inspection reports, including a certified report that identifies enclosed switches and circuit breakers and that describes scanning results. Include notation of deficiencies detected, remedial action taken, and observations after remedial action.

3.5 ADJUSTING

A. Adjust moving parts and operable components to function smoothly, and lubricate as recommended by manufacturer.

B. Set field-adjustable circuit-breaker trip ranges as specified in Section 260573 "Overcurrent Protective Device Coordination Study."

END OF SECTION 262816

SECTION 265621 - EXTERIOR LIGHTING

PART 1 - GENERAL

1.1 RELATED DOCUMENTS

A. Drawings and general provisions of the Contract, including General and Supplementary Conditions and Division 01 Specification Sections, apply to this Section.

1.2 SUMMARY

A. Section Includes:
   1. Exterior solid-state luminaires that are designed for and exclusively use LED lamp technology.

1.3 DEFINITIONS

A. CCT: Correlated color temperature.

B. CRI: Color rendering index.

C. Fixture: See "Luminaire."

D. Lumen: Measured output of lamp and luminaire, or both.

E. Luminaire: Complete lighting unit, including lamp, reflector, and housing.

F. Standard: See "Pole."

1.4 ACTION SUBMITTALS

A. Product Data: For each type of luminaire.

   1. Arrange in order of luminaire designation.
   2. Include data on features, accessories, and finishes.
   3. Include physical description and dimensions of the luminaires.
   4. Drivers including UL listing and recognition, ANSI certification, and Energy Independence and Security Act of 2007 compliance.
   5. Lamps, including life, output (lumens, CCT, and CRI), and energy-efficiency data.
   6. Photometric data and adjustment factors based on laboratory tests, complying with IES "Lighting Measurements Testing and Calculation Guides," of each luminaire type. The adjustment factors shall be for lamps, drivers, and accessories identical to those indicated for the luminaire as applied in this Project.
      For LED luminaires the adjustment factors shall be for lamps and accessories identical to those indicated for the luminaire as applied in this Project IES LM-79 and IES LM-80.

a. Manufacturers' Certified Data: Photometric data certified by manufacturer's laboratory with a current accreditation under the NVLAP for Energy Efficient Lighting Products.
b. Testing Agency Certified Data: For indicated luminaires, photometric data certified by a qualified independent testing agency. Photometric data for remaining luminaires shall be certified by manufacturer.

7. Photoelectric relays.
8. Means of attaching luminaires to supports, and indication that attachment is suitable for components involved.

B. Shop Drawings: For nonstandard or custom luminaires.

1. Include plans, elevations, sections, and mounting and attachment details.
2. Include details of luminaire assemblies. Indicate dimensions, weights, loads, and required clearances, method of field assembly, components, and location and size of each field connection.
3. Include diagrams for power, signal, and control wiring.

C. Include diagrams for power, signal, and control wiring.

D. Product Schedule: For luminaires and lamps. Use same designations indicated on Drawings.

1.5 INFORMATIONAL SUBMITTALS

A. Coordination Drawings: Plans, drawn to scale, on which the following items are shown and coordinated with each other, using input from installers of the items involved:

1. Luminaires.
2. Structural members to which equipment and luminaires will be attached.
3. Underground utilities and structures.
4. Existing underground utilities and structures.
5. Above-grade utilities and structures.
6. Existing above grade utilities and structures.
7. Building features.
8. Vertical and horizontal information.

B. Qualification Data: For testing laboratory providing photometric data for luminaires.

C. Detailed description of equipment anchorage devices on which the certification is based and their installation requirements.

D. Product Certificates: For each type of the following:

1. Drivers.
2. Lamp.
3. Photoelectric relay.

E. Product Test Reports: For each luminaire, for tests performed by manufacturer and witnessed by a qualified testing agency.

F. Sample warranty.

1.6 PRIOR APPROVAL SUBMITTAL REQUESTS

A. Full submittal data, by type, clearly highlighted and arrowed to identify the specific proposed manufacturer's nomenclature

B. Full submittal data of lamp and proposed manufacturer.

C. Full submittal data of driver (LED) of proposed manufacturer

D. LED lumen data will include
   1. Lumen output
   2. L70 and L90 testing
   3. Confirmation of independent test lab data ITL
   4. Color temperature and CRI with quantity of McAdam Ellipse steps
      a. Data shall include sphere and goniometer results for total lumen, total power, luminaire efficacy, CRI and junction temperature for the specified color temperature
   5. Make and brand of LED diode should be clearly identified on submittal data

E. LED dimming shall be equal in range and quality to the specified drivers, Quality of dimming to be defined by dimming range, freedom from perceived flicker or visible stroboscopic flicker, smooth and continuous change in level (no visible steps in transitions), natural square law response to control input, and stable when input voltage conditions fluctuate over what is typically experience in a commercial environment.

F. All substitutions must meet specified fixtures certifications (UL, ETL, CE, CSA, RoHS, DLC, Energy Star)

G. Provide lighting calculations with the prior approval request based on reflectance values and light loss factors provided by the engineer and displayed on lighting calculation drawings. (may be unique by area). Calculations shall be shown on one sheet with dimensions as shown on construction set. Data will be submitted electronically in dxf format on a flash drive and with printed calculations on Architectural E size sheets to scale with construction set sheets.

   1. Discrepancies between prior approval data calculations and the original design calculations will result in immediate disqualification of review due to time-based constraints on the bid process.

H. Prior approval request may require a sample of both the proposed and specified fixtures provided by the alternate manufacturer at NO additional cost to the project. Samples of both specified and proposed must be provided within 10 working days of request.

I. All data will be submitted electronically and in a bound format.

J. Bound data will be secured in hard binder with 3" rings for ease of review or PDF file.

   1. Types will be marked with a tab by type and indexed for ease of reference.

K. LED warranty information MUST be included by type and marked in RED to clearly identify the manufacturer's warranty terms. Warranty data MUST meet or exceed the specified manufacturers terms.

L. Prior approvals MUST be received and acknowledged to the specifier's office no less than 10 business days prior to bid.

M. ALL prior approval data must be submitted in one package with complete information. Information that is incomplete will be rejected without review.

N. The prior approval will be returned marked approved or rejected by type with no explanation. If any specification is deemed not equal the review will be stopped, the type rejected with no explanation.

O. Lumen output for the proposed fixture must be highlighted in yellow for clear identification.

P. All inverter systems supply power to LED fixtures must have pure PWM sine wave function and work with any type of lighting load.

Q. LED warranty information must be included by type and marked in red to clearly identify the manufacturer's warranty terms. Warranty data must meet or exceed the specified manufacturers terms.

1.7 CLOSEOUT SUBMITTALS

A. Operation and Maintenance Data: For luminaires to include in [**operation**] and maintenance manuals.

1. Provide a list of all lamp types used on Project; use ANSI and manufacturers' codes.

1.8 QUALITY ASSURANCE

A. Luminaire Photometric Data Testing Laboratory Qualifications: Luminaire manufacturers' laboratory accredited under the NVLAP for Energy Efficient Lighting Products.

B. Luminaire Photometric Data Testing Laboratory Qualifications: Provided by an independent agency, with the experience and capability to conduct the testing indicated, that is an NRTL as defined by OSHA in 29 CFR 1910.7, accredited under the NVLAP for Energy Efficient Lighting Products and complying with applicable IES testing standards.

1.9 DELIVERY, STORAGE, AND HANDLING

A. Protect finishes of exposed surfaces by applying a strippable, temporary protective covering before shipping.

1.10 FIELD CONDITIONS

A. Verify existing and proposed utility structures prior to the start of work associated with luminaire installation.

B. Mark locations of exterior luminaires for approval by Engineer prior to the start of luminaire installation.

1.11 WARRANTY

A. Warranty: Manufacturer and Installer agree to repair or replace (labor and material) components of luminaires that fail in materials or workmanship within specified warranty period.

1. Failures include, but are not limited to, the following:

a. Structural failures including luminaire support components.
b. Faulty operation of luminaires, driverss, and accessories.
c. Deterioration of metals, metal finishes, and other materials beyond normal weathering.

A. Warranty Period: Five year(s) from date of Substantial Completion.

PART 2 - PRODUCTS

2.1 LUMINAIRE REQUIREMENTS

A. Electrical Components, Devices, and Accessories: Listed and labeled as defined in NFPA 70, by a qualified testing agency, and marked for intended location and application.

B. NRTL Compliance: Luminaires shall comply with UL 1598 and be listed and labeled for indicated class and division of hazard by an NRTL.

C. FM Global Compliance: Luminaires for hazardous locations shall be listed and labeled for indicated class and division of hazard by FM Global.

D. Lateral Light Distribution Patterns: Comply with IES RP-8 for parameters of lateral light distribution patterns indicated for luminaires.

E. UL Compliance: Listed for wet location (UL 1598).

F. Lamp base complying with ANSI C81.61 or IEC 60061-1.

G. EMI Filters: Factory installed to suppress conducted EMI as required by MIL-STD-461E. Fabricate luminaires with one filter on each drover indicated to require a filter.

H. In-line Fusing: Install on the driver primary for each luminaire.

I. Lamp Rating: Lamp marked for outdoor use and in enclosed locations.

J. Source Limitations: Obtain luminaires from single source from a single manufacturer.

K. Source Limitations: For luminaires, obtain each color, grade, finish, type, and variety of luminaire from single source with resources to provide products of consistent quality in appearance and physical properties.

2.2 LED LIGHTING FIXTURES AND LED LAMPS

A. All LED products must be UL, ETL and/or CSA listed

B. All LED products must have LM-79 and LM-80 testing noted on specification sheet by an independent test lab

C. All LED products should be identified as L70 and/or L90 ratings based on independent test lab data

D. All outdoor and wet location listed products must clearly state the IP rating carried on the fixture based on independent test lab data

E. Bulb shape complying with ANSI C79.1.

F. CRI of Minimum 80. CCT of 4100 K.

G. Rated lamp life of **50,000** hours.

H. Lamps dimmable from 100 percent to 0 percent of maximum light output.

I. Nominal Operating Voltage: as noted on light fixture schedule.

J. All LED products must be serviceable for accessible for field repair needs.

K. All outdoor pole mounted products must have surge suppression within each fixture.

L. All outdoor lighting color rendering should be within a 7 step McAdams Ellipse. All outdoor lighting should be 4000 kelvin unless specifically noted

M. All control systems that interface with an LED product will be supported by a project "integrator" until project completion. This includes contact with the installer prior to installation, availability during installation, and final checkout and startup after installation. The quantity of days required for startup will be based on the manufacturer/agents discretion and need.

1. The project integrator must be capable of performing low voltage and dmx terminations. High voltage terminations are performed solely by the electrical subcontractor.
2. Reporting of final startup completion of the controls system back to the engineer is mandatory.
3. Invitation to attend the training with the owners representative should be made to the engineer no less than 5 days prior to training
4. Signature confirmation of training and startup is required within 5 business days after completion back to the engineer's office.

N. All LED drivers should be capable of 0-10 volt controls and DMX control and shall dim to 1% of total lumen output. Where specifically specified the dimming driver may be required to dim to .1% of lumen output , otherwise known as "dim to dark"

O. Driver manufacturers must have a 5 year history producing dimmable electronic LED drivers for the North American market.

P. Ambient driver temperatures must be within -20 degrees to 50 degrees C (-4 degrees to 122 degrees F)

Q. Driver (internal) must limit inrush current.

1. Base specification: meet or exceed NEMA 410 driver inrush standard of 430 amps per 10 amps load with a maximum of 370 amps/2 seconds
2. Preferred specification: Meet or exceed 30ma's at 277 VAC for up to 50 watts of load and 75A at 240us att 277 VAC for 100 watts of load
3. Withstand up to a 1,000-volt surge without impairment of performance as defined by ANSI C62.41 Category A
4. No visible change in light output with a variation of plus/minus 10percent line voltage input.
5. Total harmonic distortion less than 20% and meet ANSI C82.11 maximum allowable THD requirements at full output. THD shall at no point in the dimming curve allow imbalance current to exceed full output THD

2.3 LUMINAIRE TYPES - See light fixture schedule on plans.

2.4 MATERIALS

A. Metal Parts: Free of burrs and sharp corners and edges.

B. Sheet Metal Components: Corrosion-resistant aluminum or Stainless steel unless otherwise indicated. Form and support to prevent warping and sagging.

C. Plastic Parts: High resistance to yellowing and other changes due to aging, exposure to heat, and UV radiation.

D. Doors, Frames, and Other Internal Access: Smooth operating, free of light leakage under operating conditions, and designed to permit relamping without use of tools. Designed to prevent doors, frames, lenses, diffusers, and other components from falling accidentally during relamping and when secured in operating position. Doors shall be removable for cleaning or replacing lenses. Driver shall automatically disconnect when door opens.

E. Exposed Hardware Material: Stainless steel.

F. Diffusers and Globes:

1. Acrylic Diffusers: 100 percent virgin acrylic plastic, with high resistance to yellowing and other changes due to aging, exposure to heat, and UV radiation.
2. Glass: Annealed crystal glass unless otherwise indicated.

3. Lens Thickness: At least 0.125-inch minimum unless otherwise indicated.

G. Lens and Refractor Gaskets: Use heat- and aging-resistant resilient gaskets to seal and cushion lenses and refractors in luminaire doors.

H. Reflecting surfaces shall have minimum reflectance as follows unless otherwise indicated:

1. White Surfaces: 85 percent.
2. Specular Surfaces: 83 percent.
3. Diffusing Specular Surfaces: 75 percent.

I. Housings:

1. Rigidly formed, weather- and light-tight enclosure that will not warp, sag, or deform in use.
2. Provide filter/breather for enclosed luminaires.

J. Factory-Applied Labels: Comply with UL 1598. Include recommended lamps. Labels shall be located where they will be readily visible to service personnel, but not seen from normal viewing angles when lamps are in place.

1. Label shall include the following lamp characteristics:

a. "USE ONLY," including specific lamp type.
b. Lamp type, wattage, bulb type, and coating (clear or coated) for HID luminaires.
c. CCT and CRI for all luminaires.

2.5 METAL FINISHES

A. Variations in Finishes: Noticeable variations in same piece are unacceptable. Variations in appearance of adjoining components are acceptable if they are within the range of approved Samples and are assembled or installed to minimize contrast.

B. Luminaire Finish: Manufacturer's standard paint applied to factory-assembled and -tested luminaire before shipping. Where indicated, match finish process and color of pole or support materials.

C. Factory-Applied Finish for Aluminum Luminaires: Comply with NAAMM's "Metal Finishes Manual for Architectural and Metal Products" for recommendations for applying and designating finishes.

1. Finish designations prefixed by AA comply with the system established by the Aluminum Association for designating aluminum finishes.
2. Natural Satin Finish: Provide fine, directional, medium satin polish (AA-M32); buff complying with AA-M20 requirements; and seal aluminum surfaces with clear, hard-coat wax.
3. Class I, Clear-Anodic Finish: AA-M32C22A41 (Mechanical Finish: Medium satin; Chemical Finish: Etched, medium matte; Anodic Coating: Architectural Class I, clear coating 0.018 mm or thicker), complying with AAMA 611.

4. Class I, Color-Anodic Finish: AA-M32C22A42/A44 (Mechanical Finish: Medium satin; Chemical Finish: Etched, medium matte; Anodic Coating: Architectural Class I, integrally colored or electrolytically deposited color coating 0.018 mm or thicker), complying with AAMA 611.

PART 3 - EXECUTION

3.1 EXAMINATION

A. Examine substrates, areas, and conditions, with Installer present, for compliance with requirements for installation tolerances and other conditions affecting performance of the Work.

B. Examine roughing-in for luminaire electrical conduit to verify actual locations of conduit connections before luminaire installation.

C. Examine walls, roofs, and canopy ceilings and overhang ceilings for suitable conditions where luminaires will be installed.

D. Proceed with installation only after unsatisfactory conditions have been corrected.

3.2 TEMPORARY LIGHTING

A. If approved by the Engineer, use selected permanent luminaires for temporary lighting. When construction is sufficiently complete, clean luminaires used for temporary lighting and install new lamps.

3.3 GENERAL INSTALLATION REQUIREMENTS

A. Comply with NECA 1.

B. Use fastening methods and materials selected to resist seismic forces defined for the application and approved by manufacturer.

C. Install lamps in each luminaire.

D. Wiring Method: Install cables in raceways. Conceal raceway and cables.

E. Fasten luminaire to indicated structural supports.

F. Supports:

1. Sized and rated for luminaire weight.
2. Able to maintain luminaire position after cleaning and relamping.
3. Support luminaires without causing deflection of finished surface.
4. Luminaire-mounting devices shall be capable of supporting a horizontal force of 100 percent of luminaire weight and a vertical force of 400 percent of luminaire weight.

G. Wall-Mounted Luminaire Support:

1. Attached to structural members in walls, or a minimum 1/8-inch backing plate attached to wall structural members or using through bolts and backing plates on either side of wall.

H. Install luminaires level, plumb, and square with finished grade unless otherwise indicated. Install luminaires at height indicated on Drawings.

I. Coordinate layout and installation of luminaires with other construction. Refer to architectural elevations prior to rough-ins.

J. Adjust luminaires that require field adjustment or aiming. Include adjustment of photoelectric device to prevent false operation of relay by artificial light sources, favoring a north orientation.

K. Comply with requirements in Section 260519 "Low-Voltage Electrical Power Conductors and Cables" and Section 260533 "Raceways and Boxes for Electrical Systems;" for wiring connections and wiring methods.

3.4 CORROSION PREVENTION

A. Aluminum: Do not use in contact with earth or concrete. When in direct contact with a dissimilar metal, protect aluminum by insulating fittings or treatment.

B. Steel Conduits: Comply with Section 260533 "Raceways and Boxes for Electrical Systems." In concrete foundations, wrap conduit with 0.010-inch- thick, pipe-wrapping plastic tape applied with a 50 percent overlap.

3.5 IDENTIFICATION

A. Identify system components, wiring, cabling, and terminals. Comply with requirements for identification specified in Section 260553 "Identification for Electrical Systems."

3.6 FIELD QUALITY CONTROL

A. Inspect each installed luminaire for damage. Replace damaged luminaires and components.

B. Perform the following tests and inspections with the assistance of a factory-authorized service representative:

1. Operational Test: After installing luminaires, switches, and accessories, and after electrical circuitry has been energized, test units to confirm proper operation.
2. Photoelectric Control Operation: Verify operation of photoelectric controls.

C. Illumination Tests:

1. Measure light intensities at night. Use photometers with calibration referenced to NIST standards. Comply with the following IES testing guide(s):

a. IES LM-5.
b. IES LM-50.
c. IES LM-52.

d. IES LM-64.
e. IES LM-72.

D. Prepare a written report of tests, inspections, observations, and verifications indicating and interpreting results. If adjustments are made to lighting system, retest to demonstrate compliance with standards.

3.7 DEMONSTRATION

A. Engage a factory-authorized service representative to train Owner's maintenance personnel to adjust, operate, and maintain luminaires and photocell relays.

3.8 STARTUP SERVICE

A. Burn-in all lamps that require specific aging period to operate properly, prior to occupancy by Owner.

3.9 ADJUSTING

A. Occupancy Adjustments: When requested within 12 months of date of Substantial Completion, provide on-site assistance in adjusting the direction of aim of luminaires to suit occupied conditions. Make up to two visits to Project during other-than-normal hours for this purpose. Some of this work may be required during hours of darkness.

1. During adjustment visits, inspect all luminaires. Replace lamps or luminaires that are defective.
2. Parts and supplies shall be manufacturer's authorized replacement parts and supplies.
3. Adjust the aim of luminaires in the presence of the Engineer.

END OF SECTION 265621

TABLE OF CONTENTS

STRUCTURAL SPECIFICATIONS FOR:

HVAC UPGRADES AT BROWNSVILLE
ANIMAL REGULATION AND CARE FACILITY

PREPARED FOR
ETHOS ENGINEERING

ISSUED: MARCH 23, 2026

SECTION 011100 –TDI WINDSTORM CERTIFICATION DELEGATED RESPONSIBILITY
SECTION 031000 – CONCRETE FORMS
SECTION 032000 – CONCRETE REINFORCEMENT
SECTION 033000 – CAST-IN-PLACE CONCRETE
SECTION 042200 – CONCRETE MASONRY UNIT
SECTION 051200 – STRUCTURAL STEEL FRAMING

SECTION 011100 -TEXAS DEPARTMENT OF INSURANCE

WINDSTORM CERTIFICATION OF NEW STRUCTURES DELEGATED RESPONSIBILITY TO THE GENERAL CONTRACTOR

PART 1 - GENERAL

1.1 SUMMARY

1. The general contractor (Contractor) shall be responsible for the windstorm certification of all building envelope repairs, assembly replacements and alterations through the Texas Department of Insurance (TDI). The general contractor shall contract with a TDI Appointed Qualified Inspector (Inspector) to issue an Application for Windstorm Inspection Certificate of Compliance (WPI-1) form for each building, review exterior architectural and mechanical envelope assembly submittals, conduct periodic inspections of the installation of the exterior envelope assemblies, issue reports of finding of field inspections, conduct follow up inspections as deemed necessary by the Inspector and shall issue Inspection Verification (WPI-2) forms for each building. The Contractor shall include copies of each form and a final copy of the Windstorm Certificate of Compliance (WPI-8) form for each building with the substantial completion close-out documents.

1.2 CONTRACTOR'S DELEGATED RESPONSIBILITY – TDI WINDSTORM CERTIFICATION PROGRAM

A. The Contractor is solely responsible for all activities, scheduling, safe access, and communication to achieve a windstorm certificate (WPI-8) from the TDI for the building's contracted envelope repairs, replacements, and alterations. The contractor shall provide all construction services as needed to satisfy the requirements of the construction drawings and specifications, the referenced building code (International Building Code, 2018) and the TDI windstorm inspection program. The contractor shall contract with an Appointed Qualified Inspector (Inspector) as defined by the TDI windstorm program to provide field inspection services throughout construction. All construction administration costs, submittal preparation costs, submittal review by the Inspector costs, inspection costs, inspection coordination, including all general conditions, overhead and profit shall be included in the contractor's bid.

B. The Contractor's Inspector shall submit an Application for Windstorm Inspection Certification of Compliance (WPI-1) form to the TDI for each individual building. The WPI-1 shall be issued within 30 days of Notice to Proceed, and shall be made available to the Owner, Architect and Authority Having Jurisdiction for construction permit applications as requested.

C. The contractor shall make available all exterior envelope assembly submittals to their Inspector for windstorm construction compliance review and comment. Exterior envelope assembly submittals may include but are not limited to the following general items:

D.

1. Roofing assemblies

2. Edge of roof details and parapet coping detail assemblies

3. Soffit assemblies

4. Roof mounted equipment curbs and attachment assemblies
5. Wall mounted mechanical louvers and attachment assemblies
6. Exterior wall cladding and finish assemblies
7. Exterior doors and hardware assemblies
8. Exterior overhead doors and hardware assemblies
9. Exterior windows and storefront assemblies

E. The Contractor and Inspector shall review submittals for compliance with the tested performance requirements noted in the IBC, 2018 for all door, window, storefront, wall cladding, roofing system, soffit and mechanical louver and roof mounted equipment assemblies. The contractor shall provide within the submittal substantiating product evaluation reports or tested assembly reports that confirm the tested performance requirements of the IBC are satisfied by the submitted assemblies.

F. The Contractor shall coordinate appropriate inspections with the Inspector required to verify compliance of windstorm construction requirements as detailed by the TDI windstorm inspection program. The contractor and Inspector shall be responsible for the timing of the inspection and safe access to the site to accommodate the needs of the Inspector throughout the entire construction.

G. The Contractor and Inspector shall rely on the signed and sealed contract drawings as an indication that the inspected buildings were designed in compliance with the International Building Code, 2018 edition. Any delegated design responsibilities of individual assemblies or components shall be the responsibility of the contractor as indicated on the contract drawings and specifications.

H. The Contractor and Inspector shall provide site inspection reports to the Owner and Architect indicating compliance with installation details of exterior envelope assemblies or written remedial measures required by the Contractor to get inspected works in the field into compliance with submitted assembly installation details.

I. The Contractor and Inspector shall provide a list of expected site inspections to the Owner and Architect within 30 days of the Notice to Proceed date. The inspection list shall identify the work in the field to be inspected and indicate the sequence of work at which time the Inspector will need to be present to observe the installed work prior to it being concealed by subsequent trade activities and material installation.

J. The Contractor and Inspector shall conduct all windstorm inspections and activities required for certification of the buildings through the TDI Windstorm Certification program independent of all Architectural and Engineering Design Team field observations. The Contractor and/or the Inspector shall not rely on contract administration services from the Design Team as substitution for any delegated windstorm inspection service

required by the TDI windstorm certification program and/or delegated within the contract documents to the Contractor.

K. The contractor shall include a copy of the WPI-1, WPI-2 and WPI-8 forms for each individual building with all other substantial completion close-out documents. The contractor shall not rely on the WPI-2 from the Inspector as a means to satisfy this delegated responsibility. The windstorm inspection services delegated responsibility shall be considered incomplete until the Contractor delivers a copy a of the WPI-8 Certificate of Compliance for each individual building under contract.

L. Should the project, Inspector or individual building be selected by the TDI for quality control auditing of the Inspector's work, the Contractor and Inspector shall be responsible for all time, documentation and field inspections requested by the TDI windstorm program to satisfy the audit requirements.

END OF SECTION 011100

SECTION 031000 – CONCRETE FORMS

PART 1 - GENERAL

1.1 SECTION INCLUDES

A. Formwork for cast-in-place concrete including shoring, bracing and anchorage.

B. Openings for other Work.

C. Release agents and other related form accessories.

D. Form stripping.

1.2 RELATED SECTION

A. Section 032000 - Concrete Reinforcement

B. Section 033000 - Cast-In-Place Concrete

1.3 REFERENCES

A. American Concrete Institute (ACI):

1. 347, Recommended Practice for Concrete Formwork.

1.4 DEFINITIONS

A. Concealed: For Work required under this Section, the term "concealed" will mean "not exposed to view in finished construction."

B. Exposed: For Work required under this Section, the term "exposed" will mean "exposed to view in finished construction."

1.5 QUALITY ASSURANCE

A. Grading Rules. Rules of the following associations apply to materials furnished under this Section:

1. Southern Pine Inspection Bureau (SPIB).
2. Western Wood Products Association (WWPA).

B. Tolerances: Follow ACI 301 (Table 4.3.1).

1.6 DELIVERY, STORAGE AND HANDLING

A. Store off ground in ventilated and protected manner to prevent deterioration from moisture.

1.7 DESIGN CRITERIA

A. Design, engineering, fabrication, erection, maintenance and removal of formwork shall be responsibility of Contractor.

B. Construct forms following ACI 318, ACI 347, OSHA, state and local requirements.

C. Provide forms with sufficient strength to withstand pressures resulting from concrete placement and vibration.

D. Responsibility for properly bracing and shoring to support subsequent construction loads rests solely with Contractor.

E. Responsibility for removal of forms at any time before concrete has obtained certified specified design strength rests solely with Contractor.

F. The Engineer's efforts are aimed at designing a project which will be safe after full completion. The Engineer has no expertise in, and takes no responsibility for, construction means and methods or job Site safety during construction which are exclusively Contractor's responsibility. Processing and/or approving submittals made by Contractor which may contain information related to construction methods or safety issues, or participation in meetings where such issues might be discussed must not be construed as voluntary assumption by Engineer of any responsibility for safety procedures.

PART 2 - PRODUCTS

2.1 MANUFACTURERS / PRODUCTS

A. Use forms specified in the general notes of the structural drawings. Provide in largest practical sizes to minimize number of required joints.

2.2 MATERIALS

A. Wood Form Materials:

1. Reference general structural notes in sheet S1.1 for wood grade requirements.

B. Preformed Steel Forms: Minimum 16 gauge (0.06"/1.5mm) matched, tight fitting, stiffened to support weight of concrete without deflection detrimental to tolerances and appearance of finished surfaces.

C. Form Release Agent: Colorless chemical form coating or mineral oil which will not stain concrete or absorb moisture.

D. Form Ties: Standard coil or snap galvanized adjustable ties with 3/4" diameter plastic cones on exposed surfaces. Provide manufacturer's recessed plugs of gray plastic or concrete to seal tie holes.

E. Nails, Spikes, Lag Bolts, Through Bolts and Anchorages: Sizes required; of sufficient strength and character to maintain formwork in place while placing concrete.

PART 3 - EXECUTION

3.1 EXAMINATION

A. Verify lines, levels and centers before proceeding with formwork.

B. Verify that dimensions agree with drawings.

3.2 ERECTION / INSTALLATION / APPLICATION

A. Follow ACI 301 and 347.

B. Provide forms as follows:

1. Concealed Surfaces: Rough or board form finish left by clean, straight formed lumber.
2. Exposed Surfaces (Typical): Hardboard or plywood lined concrete forms.

C. Provide bracing to ensure stability of formwork. Shore or strengthen formwork subject to over-stressing by construction loads.

D. Arrange and assemble formwork to permit dismantling and stripping. Do not damage concrete during stripping.

E. Align joints and make watertight. Keep form joints to minimum.

F. Obtain approval before framing openings in structural members which are not shown.

G. Provide 1" chamfer strips in exposed exterior corners of beams, girders, columns, walls or foundation forms, around tops of all foundation slabs and elsewhere shown.

H. Provide temporary ports or openings in formwork required for cleaning out debris, adjusting reinforcing steel and to facilitate inspection.

I. Coordinate with Work of other Sections which require attachment of components to formwork.

J. Coat forms with non-staining form release agent. No other coating will be permitted unless specifically approved by Architect.

K. Inserts, Embedded Parts and Openings:

1. Provide formed openings required for items to be embedded in or passing through concrete Work.
2. Locate and set in place items which will be cast directly into concrete.
3. Coordinate with Work of other Sections in forming and placing openings, slots, reglets, recesses, sleeves, bolts, anchors, collars, thimbles, ties, sockets, nailing blocks, other inserts and components of other Work.
4. Obtain required setting information before proceeding.

L. Install accessories following manufacturer's instructions, straight, level and plumb. Ensure items are not disturbed during concrete placement.

M. Form Removal:

1. Do not remove forms or bracing until concrete has gained sufficient strength to carry its own weight and imposed loads.
2. Loosen forms carefully. Do not wedge pry bars, hammers or tools against exposed concrete surfaces.
3. Store removed forms in manner that surfaces to be in contact with fresh concrete will not be damaged. Discard damaged forms.

N. Do not construct any masonry walls on concrete floors or walls until concrete has attained its design strength and forms and shoring have been removed.

O. Terminate embedded form ties 1-1/2" from formed face of concrete. Construct ties so that ends and fasteners can be removed without causing spalling of face of concrete.

P. Repair form tie holes as follows:

1. Below Grade Surfaces: Fill tie holes with waterproof bituminous mastic to prevent water infiltration.
2. Above Grade Surfaces - Concealed: Fill tie holes with compatible materials flush with adjacent concrete.
3. Above Grade Surfaces - Exposed: Fill tie holes with compatible materials flush with adjacent concrete. Repairs shall blend in inconspicuously with surrounding surfaces. Follow Section 033000.

Q. Finishes. Follow ACI 301 unless specifically shown otherwise.

3.3 TOLERANCES

A. Formwork: Follow ACI 301.

3.4 FIELD QUALITY CONTROL

A. Inspect erected formwork, shoring and bracing to ensure that Work follows formwork design and that supports, fastenings, wedges, ties and items are secure.

3.5 ADJUSTING AND CLEANING

A. Clean forms as erection proceeds to remove foreign matter within forms.

B. Clean formed cavities of debris prior to placing concrete.

C. Flush with water or use compressed air to remove remaining foreign matter. Ensure that water and debris drain to exterior through clean-out ports.

END OF SECTION 031000

SECTION 032000 - CONCRETE REINFORCEMENT

PART 1 - GENERAL

1.1 SECTION INCLUDES

A. Reinforcing steel, welded wire fabric, tie wires and other related accessories.

B. Work includes reinforcing for interior and exterior cast-in-place concrete and reinforced concrete unit masonry Work.

1.2 RELATED SECTIONS

A. Section 033000 - Cast-In-Place Concrete.

1.3 REFERENCES

A. American Concrete Institute (ACI):
1. 301, Structural Concrete.
2. 315, Manual of Standard Practice for Detailing Reinforced Concrete Structures.
3. 318, Building Code Requirements for Reinforced Concrete.

B. American Society for Testing and Materials (ASTM):
1. A82, Cold Drawn Steel Wire for Concrete Reinforcement.
2. A185, Welded Steel Wire Fabric for Concrete Reinforcement.
3. A615, Deformed and Plain Billet Steel Bars for Concrete Reinforcement (including supplementary requirements)

C. Concrete Reinforcing Steel Institute (CRSI):
1. Manual of Practice.
2. 63, Recommended Practice For Placing Reinforcing Bars.
3. 65, Recommended Practice for Placing Bar Supports, Specifications and Nomenclature.

1.4 SUBMITTALS

A. Submit:
1. Shop drawings. Provide electronic (pdf format) file of submittals. Electronic submittals shall be organized into a single pdf file.
   a. Show reinforcing steel and wire fabric sizes, spacings, locations and quantities, bending and cutting schedules and supporting and spacing devices.
   b. Indicate visual method of identification of bar strengths following ASTM standard for steel type used.
2. Certified copies of mill test reports of reinforcement materials analysis (upon request).

B. Provide submittals within 30 days after Contract date.

1.5 QUALITY ASSURANCE

A. Maintain 1 copy of each referenced document at Site.

B. Fabrication and Placement Tolerances: Follow ACI 301.

1.6 DELIVERY, STORAGE AND HANDLING

A. Deliver to Site free of rust and scale, clearly marked as to bar strength.

B. Store reinforcing materials on pallets or other materials off ground. Avoid surface contamination before placement and prevent bending or warping.

PART 2 - PRODUCTS

2.1 MATERIALS

A. Reinforcing Steel: ASTM A615, Grade 60 (60,000 psi yield strength) billet steel bars; unfinished. Provide in sizes shown on plans provide deformed bars typically and plain bars where dowels are shown.

B. Stirrup Steel: #3 reinforcing bars may by ASTM A615 Grade 40.

C. Welded Wire Fabric (WWF): ASTM A185, plain type; unfinished. Provide in sheet form not in rolls. Provide as sized if shown or as follows if not shown:
1. Provide 1 layer of 6 x 6 W1.4/W1.4 in sidewalk and toppings 4" or less in thickness.

2.2 ACCESSORIES

A. Tie Wire: Minimum 16 gauge (0.06") annealed type.

B. Chairs, Bolsters, Bar Supports and Spacers: Sized and shaped for strength and support of reinforcement during concrete placement conditions.

C. Special Chairs, Bolsters, Bar Supports and Spacers Adjacent to Weather Exposed Concrete Surfaces: Stainless steel type; sizes and shapes required.

2.3 FABRICATION

A. Fabrication: Follow CRSI Manual of Practice.

B. Locate reinforcing splices not shown at points of minimum stress.

PART 3 - EXECUTION

3.1 PREPARATION

A. Foundations and Footings:

1. Clean excavations of loose debris and earth. Cut sides of excavations square and remove loose material.
2. Pump out standing water from excavations before placing reinforcement. Remove and replace mud or frozen soil with lean concrete.

B. Clean reinforcement completely before concrete placement. Reinforcement shall be free from loose, flaky rust, mud, oil or other coatings that would destroy or reduce bond with concrete at time concrete is placed. Re-inspect reinforcement and clean off any dried cement, mortar or dirt when placement is delayed.

C. Obtain Owner's Engineer's approval of reinforcement installations prior to placement of any concrete.

3.2 ERECTION / INSTALLATION / APPLICATION

A. Position reinforcement following ACI 301, ACI 315 and drawn details.

B. Provide reinforcing steel in concrete footings, foundation walls, thickened slabs, retaining walls and elsewhere shown.

C. Provide reinforcing steel in concrete unit masonry walls, bond beams and elsewhere shown.

D. Provide corner reinforcing steel in footings at corners and at intersections of walls unless shown otherwise:
1. Bar size and spacing shall match wall or footing reinforcing.
2. Return bars minimum of 36 diameters on each end.
3. WELDING OF REINFORCING IS NOT PERMITTED.

E. Provide the following minimum concrete cover requirements for reinforcing steel unless shown otherwise:
1. Concrete Cast Against and Permanently Exposed to Earth: 3".
2. Concrete Exposed to Earth or Weather:
   a. #5 Bars and Smaller: 1-1/2".
   b. Others: 2".

F. Provide minimum splice requirements for reinforcing steel shown or required by ACI 318. Stagger splices so that no more than 1/2 of horizontal reinforcing steel is spliced at any given cross section.

G. Provide a bond breaker such as plastic sleeves at all dowel bars occurring at control and expansion joints.

H. Place, support and secure reinforcement against displacement. Do not deviate from required position.
1. Provide bolsters and chairs required to maintain reinforcing steel at proper elevation in slab.

I. Lap welded wire fabric minimum 6" or 1 full mesh on sides and 1 foot or 2 full meshes on ends and extend to within 2" of slab edges. Chair support welded wire fabric so that welded

wire fabric is in upper half of slab while placing slabs on grade unless specifically shown otherwise.

J. Carry welded wire fabric and reinforcing steel through control (contraction) joints but not through construction and expansion joints unless shown otherwise.
   1. Grease dowels thoroughly and paper wrap to allow for horizontal movement at expansion joints.
   2. Cut alternate wires of welded wire fabric at control joints.

K. Take care to avoid disturbing reinforcement and vapor retarder during placing of concrete. Remove and reinstall disturbed or improperly installed reinforcement when discovered or instructed by Owner's Engineer before continuing concrete placement.

L. Accommodate placement of formed openings.

END OF SECTION 032000

SECTION 033000 - CAST-IN-PLACE CONCRETE

PART 1 - GENERAL

1.1 SECTION INCLUDES

A. Interior and exterior plain and reinforced site-placed concrete, vapor retarders, expansion joints, curing compounds and other related accessories.

1.2 PRODUCTS INSTALLED BUT NOT FURNISHED UNDER THIS SECTION

A. Anchor bolts.

B. Reinforcement.

1.3 RELATED SECTIONS

A. Section 032000 - Concrete Reinforcement.

1.4 REFERENCES

A. American Concrete Institute (ACI):
1. 301, Structural Concrete.
2. 302, Guide for Concrete Floor and Slab Construction.
3. 304, Measuring, Mixing, Transporting and Placing Concrete.
4. 305R, Hot Weather Concreting.
5. 308, Curing Concrete.
6. 309, Recommended Practice for Consolidation of Concrete.
7. 318, Building Code Requirements for Reinforced Concrete.

B. American Society for Testing and Materials (ASTM):
1. C31, Making and Curing Concrete Test Specimens in the Field.
2. C33, Concrete Aggregates.
3. C39, Compressive Strength of Cylindrical Concrete Specimens.
4. C94, Ready Mixed Concrete.
5. C143, Test Method for Slump of Portland Cement Concrete.
6. C150, Portland Cement.
7. C171, Sheet Materials for Curing Concrete.
8. C172, Sampling Freshly Mixed Concrete.
9. C231, Air Content of Freshly Mixed Concrete by the Pressure Method.
10. C260, Air Entraining Admixtures for Concrete.
11. C309, Liquid Membrane - Forming Compounds for Curing Concrete.
12. C494, Chemical Admixtures for Concrete.
13. C618, Fly Ash and Raw or Calcinated Natural Pozzolan for Use as a Mineral Admixture in Portland Cement Concrete.

1.5 DEFINITIONS

A. Concealed: For Work required under this Section, the term "concealed" will mean "not exposed to view in finished construction."

B. Exposed: For Work required under this Section, the term "exposed" will mean "exposed to view in finished construction."

1.6 SUBMITTALS

A. Submit: Submittal shall be provided in electronic (pdf format) format. Electronic submittal shall be provided in a single pdf file.
   1. Concrete mix designs. Follow ACI 301. Submit a mix design for each class of concrete required within 30 days after Contract date and prior to placing any concrete.
   2. Product data including installation requirements for curing/sealer compounds, mineral and chemical admixtures and joint devices.
   3. Concrete delivery tickets.
      a. Submit to Owner's Engineer at Site.
      b. Follow ASTM C94. Also include:
         1) Batch number.
         2) Mix by class of concrete and bag content with maximum aggregate size used
         3) Air content.
         4) Quantities and types of admixtures.
         5) Slump.
         6) Time of loading.
      c. Delivery tickets not showing time of loading will be grounds for rejection of load.

   4. Testing laboratory reports.
      a. Submit directly to Owner's Engineer, Contractor and ready-mix supplier.
   5. Certification or test results indicating compliance of material or source of material with these specifications (upon request).

1.7 QUALITY ASSURANCE

A. Maintain 1 copy of each referenced document at Site.

B. Acquire cement and aggregate from same source for all Work.

C. Tolerances: Place and finish cast-in-place concrete within tolerance limits specified in ACI 301 and as follows:
   1. Formed Surfaces: Follow ACI 301 (Table 4.3.1.).

D. Acceptance Of Work: Presence or evidence of nonconforming Work shall be sufficient cause for Owner's Engineer to require entire section of concrete affected be torn out and rebuilt properly at Contractor's expense.
   1 Such unacceptable Work includes:
      a. Horizontal or vertical misalignment.
      b. Cracking.
      c. Honeycombing.
      d. Spalling.

e. Embedded debris.

2. If by tests or on-site observation, Owner's Engineer determines that any of Contract requirements have not been fully met in completion of this Work, he may require additional testing or retesting to determine composition, soundness and actual structural capacity of any concrete.
3. Costs for such testing shall be paid by Contractor if such tests subsequently establish that Work is unacceptable and by Owner if Work is found to be acceptable.
4. Remove and replace all unacceptable Work including related Work which was acceptable but which must be disturbed as a result of replacement if such tests establish that Work is unacceptable with regard to compliance with these specifications.

1.8 DELIVERY, STORAGE AND HANDLING

A. Concrete Delivery: Follow ACI 304 and ASTM C94.

B. Deliver packaged materials in manufacturer's unopened, labeled containers.

C. Store materials to provide protection from weather and damage.

D. Deliver concrete in agitating or revolving type equipment. DO NOT USE NON-AGITATING EQUIPMENT.

E. Discharge concrete at Site within 1-1/2 hours or 300 revolutions, whichever comes first, after water has been added to cement and aggregates or cement batches with aggregates unless a longer time is specifically authorized by Owner's Engineer.

F. Owner's Engineer may require a reduction in this elapsed time during hot weather, when high early strength cement is being used or under other conditions contributing to quick stiffening of concrete.

1.9 PROJECT CONDITIONS

A. Coordinate Work of other trades who will furnish and install items of Work (sleeves, piping, conduit, inserts, etc.) to be cast in concrete. Place no concrete until such items are in place.
1. Anchor bolts for steel columns to be supplied by Metal Building Manufacturer to the rebar / concrete finishing contractor for installation.

B. Place concrete at ambient temperatures between 50° and 95°F.

C. Follow instructions for special procedures at end of this Section should it be necessary to place concrete in colder or hotter weather.

D. Protect freshly placed concrete from rainfall, water leaks, falling objects, traffic of any kind and other hazards to surfaces. Provide barricades and lights if necessary.

PART 2 - PRODUCTS

2.1 MATERIALS

A. Portland Cement:
   1. ASTM C150 Type I (Normal) or Type II (Moderate).
   2. Cement shall be free of false set when tested following ASTM C451.
   3. Use same brand, type and source throughout.

B. Aggregates:
   1. Fine Aggregate: ASTM C33; natural or manufactured sand, clean, hard and durable, uncoated grains, free from deleterious matter. Average fineness modulus shall be between 2.5 and 3.0.

   2. Coarse Aggregate: ACI 301 and ASTM C33.
      a. Interior and Concealed Exterior Applications: Crushed gravel or stone, durable uncoated particles free from deleterious matter.
      b. Exposed Exterior Applications: Crushed dolomite, granite or limestone.
      c. Grading: ASTM C33 No. 57.

C. Admixtures:
   1. Mineral Admixtures:
      a. Fly Ash: ASTM C618 Class C or Class F; loss on ignition 6% maximum.
      b. Fly ash source must be approved by Owner's Engineer. Preapproved sources are:
         1) Class C: Boral Manufacturing
   2. Chemical Admixtures:
      a. Water Reducing Admixtures: ASTM C494 Type A (Water Reducing).
         1) Type E (Water Reducing and Accelerating) may be used during cold weather and Type D (Water Reducing and Retarding) during hot weather with Engineer's prior approval.
         2) Type F (Water Reducing - High Range) or Type G (Water Reducing High Range and Retarding) admixtures (superplasticizers) may used be used with Engineer's prior approval.
      b. Calcium chloride, thiocyanates, corrosive admixtures or admixtures containing more than 0.05% chloride ions (total) are not permitted.
   3. DO NOT USE ANY OTHER ADMIXTURES WITHOUT ARCHITECT'S PRIOR WRITTEN APPROVAL.

D. Water: Potable; free from objectionable quantities of foreign materials harmful to concrete such as silt, organic matter, acids, alkali, salt and other deleterious substances.

E. Vapor Retarders: Clear or black fungus resistant polyethylene or fabric reinforced plastic film recommended for below grade application; 10 mil thick.

F. Expansion Joint Filler Strips: ASTM D1751 non-extruding and resilient type, asphalt impregnated fiberboard or felt or ASTM D1752 closed cell foam with resiliency recovery of 95% if not compressed more than 50% of original thickness; 3/8" thick for interior and 1/2" thick for exterior unless shown otherwise.

G. Liquid Curing/Sealer Compound (Typical): ASTM C309 Type 1; approved by Asphalt and Vinyl Composition Tile Institute; 30% minimum solids content.

H. Sheet Curing Membranes: ASTM C171; absorptive mats, waterproof paper or polyethylene film.

2.2 CONCRETE MIXES

A. General Requirements:
1. Concrete Mixing: Follow ASTM C94. BATCH MIXING OF CONCRETE ON SITE IS NOT PERMITTED EXCEPT FOR MISCELLANEOUS MIXES.
2. Mixing Procedures: Follow ACI 301.
3. Handling and Weighing: Follow ACI 304.
4. Measure water, air entraining admixtures and water reducing admixtures by weight or volume. Measure all other materials by weight.
5. AIR ENTRAINED CEMENT IS NOT ACCEPTABLE.
   a. Provide only non-air entrained concrete.
6. Provide water reducing admixtures in all Classes of concrete Work.
7. No dry-packaged mixtures are allowed.
8. Fly ash may be provided as supplementary cementitious material in concrete Work. Fly ash content shall not exceed 25% of the cementitious material weight within a concrete batch.
9. Exposed concrete is to meet requirements for potentially destructive exposure.
10. Admixtures are to be added at batch plant.
11. Do not add water to mix on job unless previously approved by Owner's Engineer. Note amount of water added on delivery ticket.
12. Nominal maximum allowable slump of concrete (except for controlled density fill) is 4".
13. Provide minimum 7 day compressive strength of 2,000 psi for concrete used for structural columns and footings.

B. Concrete Properties and Proportions:
1. Provide concrete meeting the following properties and performance specifications

a. Foundation Concrete (Class 1): Slab, Grade Beams & Footings

F'c	3,000 psi (28-day compressive strength)
Portland Cement	ASTM C 150 Type I/II
Fly Ash	ASTM C 618 Class C (Maximum of 25% of cementitous material)
Water/Cementitious Material Ratio	0.60 Maximum
Slump	5" (+/- 1") measured from the discharge of the truck
Coarse Aggregate	1" maximum with gradation requirements prescribed in Table 2 of ASTM C33 Size No. 57
Air Entrainment	Air entrainment shall not be used for concrete with exposed steel troweled surfaces
Total Air Content	3% Maximum (by volume)
Concrete Temperature	95°F Maximum

b. CMU Grout Fill (Class 2)

F'c	3,000 psi (28-day compressive strength)
Portland Cement	ASTM C 150 Type II
Fly Ash	ASTM C 618 Class C (Maximum of 25% of cementitous material)
Slump	8" to 11" measured from the discharge of the truck
Coarse Aggregate	3/8" maximum with gradation requirements prescribed in Table 2 of ASTM C33 Size No. 8

PART 3 - EXECUTION

3.1 EXAMINATION

A. Examine Site conditions and excavations for earth forms to verify that they are neatly and accurately cut and correctly located.

B. Examine formwork to verify that it is sound and correctly located, that conditions are proper for concrete installation and that excavations are sufficient to permit placement, inspection and removal of forms.

C. Examine reinforcement to verify requirements for concrete cover.

D. Examine areas of Work to be cast to determine that substrates are properly installed, required reinforcement, inserts and embedded items are in place and that correct finish top of cast elevations can be obtained.
   1. Verify that conduit and piping is installed below slab. NO UTILITIES ARE TO BE BUILT INTO SLAB OR TOPPING.
   2. Verify depths of depressed conditions are correct for specified delayed finishes. Slabs to receive finishes over 1/8" in thickness shall be depressed as required to allow for alignment with adjacent finish materials.
   3. Verify base and sub-base slope correctly at floor drains. Slab thickness shall be maintained in sloped areas.

E. Do not start Work until unsatisfactory conditions have been corrected.

3.2 PREPARATION

A. Ensure availability of sufficient labor, equipment and materials to place concrete correctly following Project requirements and scheduled casting.

B. Notify Owner's Engineer at least 48 hours in advance of placing any concrete. Place concrete only when Owner's Engineer is present unless this requirement is specifically waived. Excavations must be inspected and approved by soils engineer.

C. Place no concrete before embedded items are in place and before forms, reinforcing and affected Work of other trades have been examined.
   1. Coordinate placement of joint devices with erection of formwork and placement of form accessories.

D. Drill holes in previously poured concrete, insert steel dowels and pack solid with non-shrink grout in locations where new concrete is dowelled to existing Work including at bases and pads.

E. Immediately Before Placing Concrete:
   1. Clean debris from forms, decks, base slabs, bottoms of forms, etc. to receive concrete.
   2. Thoroughly wet base of slabs poured directly on earth, sand, stone, concrete or gravel.
   3. Verify sizes and locations of openings required.
   4. Secure approval of conditions from Owner's Engineer. Allow a minimum of 1 hour for Owner's Engineer's inspection after installation of reinforcing and before placing concrete.

3.3 ERECTION / INSTALLATION /APPLICATION

A. Follow ACI 301.

B. Place concrete only when Owner's Engineer is present unless this requirement is specifically waived by Owner's Engineer upon notice of scheduled pour.

C. Notify Owner's Engineer not less than 48 hours (excluding holidays and weekends) in advance of placing concrete.

D. Provide concrete of following various classes unless shown otherwise.
1. Class I: Cast-In Place Concrete .

E. Provide uniform slope at rate shown on structural foundation plans. Exterior walkways shall slope as indicated on Architectural plans.

F. Install vapor retarder under interior and exterior slabs, walks, bases and pads on grade.
1. Lay film directly on slab base just before setting reinforcing and pouring concrete slabs. Provide widest widths practical and oriented to obtain least lineal footage of joint.
2. Lap and seal joints. Lap film a minimum of 6" at joints with top lap placed in direction of spreading of concrete. Seal joints watertight by taping or applying sealant at overlapping edges and ends.
3. Carry film up walls, columns, etc. and secure in place with cement or tape. Fold and cement corners or otherwise make vaporproof.
4. Provide sealed contact with piping and other penetrating items. Cut film carefully around opening for pipes, ducts, conduit, wiring, etc. Tape film to insure maximum barrier effectiveness.
5. Exercise care so that film is not punctured. Seal joints, cuts, punctures, etc. with tape, cement or hot iron.
6. Trim exposed film at floor line after concrete has cured and hardened.
7. Repair vapor retarder damaged during placement of concrete reinforcing.

G. Provide sufficient workmen to allow for placement of concrete and other operations within time limits required.

H. Keep delivery carts and buggies on runways. Do not allow them to bear on reinforcing or uncured concrete.

I. Deposit concrete within 6 feet of its final location to avoid segregation due to rehandling or flowing. Do not drop concrete freely where reinforcing will cause segregation. Chuting procedure is subject to approval of Owner's Engineer. Maximum allowable drop is 5 feet. SPREADING WITH VIBRATORS IS PROHIBITED.

J. Place concrete quickly and vibrate thoroughly with a vibratory screed or other device approved by Owner's Engineer. Maintain specified position of mesh and reinforcement. Follow ACI 309 for use and type of vibrators.

K. Deposit concrete continuously, or when continuous placement is not possible, provide construction joints at locations approved by Owner's Engineer.

L. Do not deposit partially set concrete, retempered concrete or any concrete failing slump or air content tests.

M. Consolidate concrete by internal vibration to maximum practical density so that it is free from pockets of coarse aggregate and trapped air, fits tightly against subgrades, forms and embedded items and leaves smooth, dense surfaces.

N. Operate vibrators using experienced workers and where possible use same operators throughout Project. DO NOT USE VIBRATORS AGAINST FORMS OR REINFORCEMENT.

O. Finishes: Follow ACI 301 (Chapter 11). Perform finishing using only experienced, skilled workers.
1. Flatwork:
   a. Slab finish shall be as noted on structural foundation plans. Reference structural general notes for flatness requirements pertaining to surface finish.
   b. Detectable Warning Finish: For exterior handicapped curb cuts (ramp only not on flared sides), textured or imprinted concrete using rollers or aluminum tools to produce 0.9" diameter x 0.2" high (nominal) truncated domes at 2.35" on center following requirements of Americans With Disabilities Act (ADA).
2. Vertical and Miscellaneous Work:
   a. Exposed Surfaces: Smooth, Do Not Rub Cement Paste on Exposed Concrete Surfaces.
   b. Concealed Surfaces: Rough form finish.

P. Control (Contraction) Joints:
1. General Requirements:
   a. Provide joints in walks, pads, slabs and toppings shown or specified.
   b. Make joints approximately 1/8" wide and minimum depth of 1/4 slab thickness.
   c. Locate as shown or as follows if not shown. Verify final locations with Owner's Engineer before proceeding.

2. Interior Locations:
   a. Provide sawed control joints where shown or at maximum 20 feet on center in each direction in slabs and toppings if not shown.
      V. Install sawed joints immediately after final finishing to depth of 1-1/2" with Soff-Cut saw.
      VI. Saw control joints 1/8" wide unless otherwise approved. A keyed construction joint may be located where sawed joint is required.

Q. Curing and Protection: Follow ACI 308.
1. Prevent excessive moisture loss from formed surfaces. Cure formed surfaces by moist-curing or application of curing compound for remainder of curing period if forms are removed before 7 days have elapsed.
2. Provide 1 application of liquid curing/sealer compound immediately after finishing of concrete on interior and exterior concrete slabs.
   a. Exception #1: Floors scheduled to receive ceramic tile and quarry tile shall be sheet membrane/water (moist) cured for minimum of 10 days.

1) Begin water curing as soon as concrete has hardened sufficiently to prevent damage from water or cover material.
2) Water curing shall consist of ponding or with sprinkling, spraying or covering with wet burlap, sand or waterproof barrier such as polyethylene or building paper.
3) Maintain 100% coverage continuously over water cured slabs for minimum of 4 days for ponding and for 7 days for spraying and membrane curing.

3.4 FIELD QUALITY CONTROL

A. Test and inspect materials and operations as Work progresses. Failure to detect defective Work shall not prevent rejection when defect is discovered nor shall it obligate Owner for final acceptance.

B. Costs for any retesting resulting from Work found to be in non-compliance shall be paid for by Contractor.

C. Strength: ASTM C31, C39 and C172.
1. Conduct strength tests of all classes of concrete (except miscellaneous mixes).
2. Secure composite samples following ASTM C172. For strength tests, a sample shall be obtained from same batch of concrete on a representative, random basis. A sample consists of six specimens.
3. Mold and cure each sample following ASTM C31.
4. Test 1 specimen at 7 days, test 2 specimens at 28 days and 1 specimen at 56 days following ASTM C39. Results shall be average of strengths of 2 specimens, except that if 1 specimen in a test manifests evidence of improper sampling, molding or testing, it shall be discarded.
5. Record exact location of Work represented by each sample on test reports.
6. Provide a sample for each amount or fraction thereof of each class of concrete placed each day as follows:
   a. 0-150 Cubic Yards: 1 Sample.

E. Air Content: ASTM C231.

F. Slump: ASTM C143.

3.5 ADJUSTING AND CLEANING

A. Provide materials, methods and finishes for cleaning, patching and other repairs consistent with similar concrete Work in place, approved by Owner's Engineer before beginning repair Work and performed at Contractor's expense.

B. Repair any slabs which do not meet finish requirements performing all grinding, filling of cracks or patching and leveling procedures as required. Replace slabs which cannot be successfully repaired.

C. Point carefully around piping, conduit and other penetrations on both interior and exterior surfaces.

D. Obtain Owner's Engineer prior approval of any corrective measures for slabs which are dusting or showing other signs of improper curing. These may include additional applications of sealer or hardener, grinding or covering with coating or topping.

E. Remove from interior and exterior exposed surfaces any stain-producing elements such as pyrites, nails, wire, reinforcing steel and form ties immediately prior to final acceptance.

F. Remove stains completely. Use of weak acids or patented cleaners is acceptable but surface is to be completely neutralized after use.

G. Blend in surfaces of exposed repairs inconspicuously with surrounding surfaces.

3.6 PROTECTION

A. Protect newly placed concrete from weather and construction traffic damage.

3.7 SPECIAL PROCEDURES

A. It is Project intent to continue concrete Work required to keep Project on schedule throughout summer and winter.

B. Hot Weather Concreting:
1. Follow ACI 305R.
2. Obtain approval to use a retarder in concrete.
3. Temperature of concrete shall not exceed 95°F.
4. Cool water and aggregate to lower temperature of concrete.
5. Cool subgrade and forms by sprinklering with water immediately before placing.
6. Schedule trucks to reduce waiting time at Site.
7. Cure immediately after finishing.

C. Replace any concrete injured or destroyed by reason of freezing, hot or cold weather at Contractor's own expense including cost of replacing any Work embedded in concrete.

END OF SECTION 033000

SECTION 042200 – CONCRETE MASONRY UNITS

PART 1 - GENERAL

1.1 SECTION INCLUDES

A. Concrete masonry units, lintels, mortar and other related accessories.

1.2 PRODUCTS INSTALLED BUT NOT FURNISHED UNDER THIS SECTION

A. Reinforcing steel.

B. Masonry accessories.

1.3 RELATED SECTIONS

A. Section 032000 – Concrete Reinforcement

B. Section 033000 – Cast-In-Place Concrete

1.4 REFERENCES

A. The Masonry Society (TMS):

1. TMS 402, Building Code Requirements for Masonry Structures.
2. TMS 602, Specifications for Masonry Structures.

B. American Society for Testing and Materials (ASTM):

1. C33, Concrete Aggregates.
2. C90, Load-Bearing Concrete Masonry Units.
3. C140, Methods of Testing Concrete Masonry Units.
4. C150, Portland Cement.
5. C331, Lightweight Aggregates for Concrete Masonry Units.
6. C618, Fly Ash and Raw or Calcined Natural Pozzolan for Use as a Mineral Admixture in Portland Cement Concrete.

C. Portland Cement Association (PCA): Recommended Practices For Laying Concrete Block.

1.5 DEFINITIONS

A. Concealed: For Work required under this Section, the term "concealed" will mean "not exposed to view in finished construction."

B. Exposed: For Work required under this Section, the term "exposed" will mean "exposed to view in finished construction."

1.6 SUBMITTALS

A. Submit: Provide electronic (PDF) copies of all required submittal information.

1. Provide independent test reports following ASTM C140 for sampling and testing of CMU. Test reports shall be dated within six months of start of project. Test reports shall include net area compressive strength, absorption and density results, average width, height and length of each unit, minimum face shell thickness, average face shell thickness, minimum web thickness, average web thickness, and all other test reporting requirements as noted in ASTM C140.
2. Color samples for precolored units.
3. Product data sheets for masonry unit assembly components such as horizontal wire reinforcement, control joint material and masonry veneer ties.

1.7 QUALITY ASSURANCE

A. Follow TMS 402 and 602.

B. Maintain 1 copy of each referenced document at Site.

C. Manufacturer: Current NCMA member.

D. Provide units from single manufacturing source to ensure uniform texture for continuous and visually related areas.

1.8 DELIVERY, STORAGE AND HANDLING

A. Deliver to Site only units properly cured and following these specifications.

B. Protect masonry units from damage and against moisture and weather, particularly against freezing and thawing. Maintain hollow concrete masonry units in their initial dry state until after they are laid up in wall.

C. Stack masonry units in dry place, off ground on prepared plank platform and in manner to promote circulation of air through and around block. Protect stacked block by shed roof or tarpaulin arranged to allow for circulation of air around and above stacked block.

D. Carefully handle masonry units. Do not build units into Work with chipped edges, spalls or other damage to their appearance which would show in finished wall.

E. Do not store adjacent to materials which can cause staining or discoloration.

1.9 PROJECT CONDITIONS

A. Do not erect masonry when, in Owner's Engineer's opinion, atmospheric conditions or limited facilities prevent proper setting, bonding and curing.

B. Protect tops of masonry walls against weather. Use strong, non-staining waterproof membrane secured with metal masonry wall clamps or properly weighted down. Maintain this protection

during construction of walls and after their completion, properly anchored, repaired and replaced until tops of walls are covered by Work of others.

C. Leave necessary openings for passage of pipes, drains, ducts, wires and utility lines. Form chases shown, required or directed. Return and solidly close all openings at completion of Work of other trades. Remove rubbish and sweep out area before closing up any pipe chase, duct space or similar limited access or inaccessible area.

D. Coordinate with other trades and make provisions that will permit installation of their Work in manner to avoid cutting and patching. Build in items furnished by other trades as Work progresses.

PART 2 - PRODUCTS

2.1 MATERIALS

A. Portland Cement: ASTM C150 Type 1.

B. Lime: ASTM C207 Type S.

C. Pozzolans: ASTM C618.

D. Aggregates: ASTM D33 normal weight or ASTM C331 lightweight. Provide either normal, medium or light weight units unless shown otherwise.

E. Mortar: Type S, following ASTM C270 Unit Proportion Requirements using preblended masonry cement.

F. Integral Water Repellent: ASTM E514 Class E.

1. Approved Product: Grace Construction Products' "Dry-Block" admixture.

G. Integral Color: Integral color pigment mixed with cement and aggregates during fabrication to match local licensee's color selection(s).

2.2 CONCRETE BLOCK

A. Hollow Units: ASTM C90 Type I; 2000 psi minimum compressive strength (net).

2.3 FABRICATION:

A. Follow TMS and NCMA.

B. Provide the following finishes and colors:

1. Exterior Concrete Block: Manufacturer's regular (smooth) molded finish and precolored during fabrication.

C. Provide integral water repellent in all exterior concrete block and exterior split face block units.

D. Provide concrete masonry units with modular dimension; standard units 7-5/8" high, 1'-3-5/8" long and 3/8" less nominal widths or thicknesses shown or required, with permissible variation of 1/16".

E. Provide special units for 90° corners, bond beams, bullnosed corners, control joint fillers, etc. shown or required.

F. Cure units minimum 14 days in presence of moist air following ASTM C426.

1. Provide block properly cured to 30% of maximum absorption. Questionable block will be tested and shipment rejected if average moisture content is found to exceed specification limits.
2. Do not build in block with moisture content exceeding specification requirements into Work. Dry block containing excess moisture to acceptable maximum either by further air drying or use of heat before being used.
3. No extension of time for completion will be allowed due to delay cause by failure of Contractor to maintain stored block at acceptable moisture content.

PART 3 - EXECUTION

3.1 EXAMINATION

A. Verify that field conditions are acceptable and are ready to receive Work.

B. Inspect materials for defects before starting installation.

C. Reject any chipped or broken block. DO NOT BUILD DAMAGED UNITS INTO WORK.

3.2 PREPARATION

A. Direct and coordinate placement of metal anchors supplied to other sections.

B. Provide temporary bracing during installation of masonry Work. Maintain in place until building structure provides permanent bracing.

3.3 ERECTION / INSTALLATION / APPLICATION

A. Follow TMS and NCMA.

B. See Sections under which materials to be installed are furnished for additional installation requirements.

C. Use thoroughly dry concrete block with sharp, square, unbroken corners and edges and no cracks. DO NOT WET MASONRY UNITS.

D. Take special care in handling and storage of units for exposed block Work. Do not install chipped or marred block where exposed.

E. Lay block in running bond with each course lapping block below by 1/2 block unless shown otherwise.

F. Lay solid block units with full mortar coverage on head and bed joints and hollow block units with face shell bedding on head and bed joints. Mortar hollow block unit web joints in load bearing piers or pilasters, in starting course on footings or solid foundation walls and next to cores grouted solid.

1. Do not shift or tap masonry after mortar has achieved initial set. Remove mortar and replace where adjustments must be made.
2. Buttering corners of joints or excessive furring of mortar joints are not permitted.

G. Build walls and partitions true to dimension, plumb and square, laid to line in level courses, accurately spaced and coordinated with other Work. Keep individual face units "in plane" with walls rising together. Use double lines in multiple-tier walls with each tier plumb and all units "in plane."

H. Lay out Work to avoid fractional pieces. Interlock external corners. Set partitions on structural floor slabs before finish floor is laid unless shown otherwise.

I. Perform required cutting with power equipment which will produce true, straight, clean edges free of chipping and undamaged surfaces. CUTTING WITH HAMMER AND CHISEL WILL NOT BE PERMITTED. Use 100% solid block where webs would be exposed. Minimum length of cut units on exposed Work shall be 1/2 unit.

J. Cut units accurately to fit around pipes, ducts, openings, structural framing, etc. and slush voids full.

K. Take particular care to embed conduits and pipes within block without fracturing exposed shells and to fit units around switch, receptacle and other boxes set in walls. Grind and cut units before building in service where electric conduit, outlets, switch boxes and similar items occur.

L. Fill voids and joints between block and different types of materials with mortar.

M. Make joints approx. 3/8" wide. Line up joints vertically. Remove burrs with burlap or carpet after tooling.

N. Neatly tool interior and exterior joints below grade and in exposed masonry firm to slightly concave profile when mortar is thumbprint hard unless shown otherwise. Cut off flush and brush off surplus as Work progresses. Tool vertically then horizontally. Furnish all masons with joint tools of same diameter. Exception: Strike flush interior concealed joints (such as in chases and plenums) or those covered with directly applied finish materials.

O. Install vertical and horizontal masonry reinforcing where shown. Grout cores solid full length of reinforcing with masonry core grout specified in Section 03300. Maintain position of reinforcing within 1/2" of dimensioned position.

P. Fill voids receiving anchor bolts, wedge anchors, expansion bolts, etc. solid with masonry grout specified under Section 03300.

Q. Provide solid masonry bearing surface under lintels, beams, bearing plates, etc. as shown. Provide the following minimum solid bearing (as applicable) if not shown:

1. Lintels: Solid masonry bearing for full thickness of wall by length of bearing plus 8" by 8" high.
2. Beams: Solid masonry bearing for full thickness of wall by length of bearing plus 1'-4" by 2 ft high.

R. Provide solid masonry for course directly below corbelled masonry walls. Max corbel for each course is 1".

S. Provide closure, lintels, bond beams, jamb units, sash, corners headers and other special shapes shown or required. Provide standard manufactured sizes or cut full size block for fractional course heights and lengths. Provide sash blocks or other shapes designed to receive specified control joint filler strips.

T. Provide bullnosed units at exterior corners unless shown otherwise. Field grind to Owner's Engineer's satisfaction all external corners not installed bullnosed.

1. Exception: Provide square cornered blocks at window jambs.

U. Step back unfinished Work for joining with new Work. Toothing will not be permitted unless specifically approved by Owner's Engineer. Remove loose masonry and mortar and clean thoroughly before new Work is started.

V. Build in chases, openings, reinforcement, anchors, access doors, lintels, flashings and other items required. Provide centering required to properly support masonry until mortar attains design strength. Build in sleeves except where shown to be installed in other Sections.

W. Build hollow metal door frames into wall. Plumb and brace. Thoroughly embed frame anchors. Slush frame jambs full with mortar. Allow 1/4" for caulking around frame in exterior walls and 1/8" on interior unless shown otherwise. Rake out joints for caulking.

X. Fill masonry units solid with mortar 2 cores wide at each door jamb and 1 core wide at each window jamb for full height of opening.

Y. Hold block down approximately 2" below roof structural members such as beams, joists and roof deck subject to deflection at non-bearing walls.

Z. Provide control and expansion joints in all block Work. Reference Architectural Contract Drawings for masonry joint locations. Joints spacing shall not exceed 22 ft. on center nor shall a joint be located within two feet of an opening.

AA. Build in control joint filler strips in control joints as masonry is laid up allowing for caulking on each side of wall. Reference architectural for caulking material. Exception: Do not carry horizontal joint reinforcement through control or expansion joints.

BB. Maintain lateral support of intersecting masonry non- load bearing walls with wire mesh ties placed across joint between walls and spaced 1'-4" on center vertically.

CC. Install concealed masonry flashing where shown. Provide clean smooth surfaces set in full mortar bed and cover with full mortar bed. Seal penetrations and joints with mastic.

DD. Build in exposed sheet metal flashing, expansion joints and reglets occurring in masonry. Cut out mortar joint and set flashing or reglet in new mortar bed in existing construction.

EE. Build in bond beams grouting full and carefully position reinforcing where shown. Lap rebars a minimum length of 48 bar diameters. Field modify standard units required to receive required reinforcing where bond beam units are not available in specified finish.

FF. Any masonry Work found deficient in respect to these specifications will require entire wall to be removed and relayed at Contractor's expense.

3.4 TOLERANCES

A. Maximum Variation From Unit to Adjacent Unit: 1/32".

B. Maximum Variation From Plane of Wall: 1/4" in 10 feet and 1/2" in 20 feet or more.

C. Maximum Variation From Plumb: 1/4" per story non-cumulative; 1/2" in 2 stories or more.

D. Maximum Variation From Level Coursing: 1/8" in 3 feet, 1/4" in 10 feet and 1/2" in 30 feet.

E. Maximum Variation From Joint Thickness: 1/8" in 3 feet.

F. Maximum Variation From Cross Sectional Thickness of Walls: 1/4".

3.5 ADJUSTING AND CLEANING

A. Replace any masonry units which are loose or damaged and repair defective mortar joints. Make these repairs such that evidence of repair is not apparent.

B. Remove surplus mortar, drippings, splatter, etc. from exterior and interior masonry as Work progresses.

C. Clean, point & dry brush all exposed Work at end of each working day. Fill holes from line pins and nails.

D. Point joints to provide a neat uniform appearance. Cut out unrepairable defective joints. Fill solidly with mortar and tool to match adjacent Work. DO NOT CORRECT IMPERFECTIONS WITH SPACKLE.

E. Thoroughly rub out exposed Work to remove any projections. Fill indentations flush with surface.

F. Clean masonry surfaces upon completion from top down with water and fiber brushes to remove stains. ACID CLEANING OF MASONRY IS NOT PERMITTED.

END OF SECTION 042200

SECTION 051200 - STRUCTURAL STEEL

PART 1 - GENERAL

1.1 SUMMARY

A. Section includes structural steel and grout. All structural steel, hardware and connections shall be hot dip galvanized.

1.2 DEFINITIONS

A. Structural Steel: Elements of structural-steel frame, as classified by AISC 303, "Code of Standard Practice for Steel Buildings and Bridges."

1.3 ACTION SUBMITTALS

A. Product Data: For each type of product indicated.

B. Shop Drawings: Submit shop drawings of all structural steel members. Provide electronic (PDF) copies of each drawing. Shop drawings shall include fabrication piece drawings and field erection drawings. Structural construction drawings shall not be photocopied and submitted.

1.4 INFORMATIONAL SUBMITTALS

A. Provide electronic (PDF) copies of all required submittal information.

1. Qualification Data: For qualified Installer and fabricator.
2. Welding certificates.
3. Mill test reports for structural steel, including chemical and physical properties.
4. Source quality-control reports.

1.5 QUALITY ASSURANCE

A. Erector Qualifications: A qualified erector who participates in the AISC Quality Certification Program and is designated an AISC-Certified Erector, Category CSE. In lieu of AISC certification, erector may, at the construction manager's recommendation and request, provide an in-house quality control program indicating compliance with minimum steel erection quality control requirements noted in AISC 360 – 10 "Specification for Structural Steel Buildings", Chapter N, subsection N2.

B. Fabricator Qualifications: A qualified fabricator who participates in the AISC Quality Certification Program and is designated an AISC-Certified Plant, under Building QMS Certification Program, Category BU. In lieu of AISC certification, fabricator may, at the construction manager's recommendation and request, provide an in-house quality control program indicating compliance with quality control procedures meeting minimum fabrication requirements noted in AISC 360 – 10 "Specification for Structural Steel Buildings", Chapter N, subsection N2.

C. Welding Qualifications: Qualify procedures and personnel according to AWS D1.1/D1.1M, "Structural Welding Code - Steel."

D. Comply with applicable provisions of the following specifications and documents:

1. AISC 303, Code of Standard Practice for Steel Buildings and Bridges.
2. AISC 360, Specification For Structural Steel Buildings.
3. RCSC's "Specification for Structural Joints Using ASTM A 325 or A 490 Bolts."
4. AISC's "Specification for Structural Steel Buildings--Allowable Stress Design."

E. Preinstallation Conference: Conduct conference at Project site.

1.6 FABRICATION

A. Fabricate structural steel according to AISC specifications and tolerance limits of AISC's "Code of Standard Practice for Steel Buildings and Bridges" for structural steel.

B. All fabricated structural steel and hardware shall be hot dip galvanized in conformance with the requirements of ASTM A123 and A153.

PART 2 - PRODUCTS

2.1 STRUCTURAL-STEEL MATERIALS

A. W-Shapes: ASTM A 572/A 572M, Grade 50 (345), Fy = 50 KSI.

B. Plate, Bar, Channels, Angles Shapes: ASTM A 36/A 36M, Fy = 36 KSI.

C. Cold-Formed Hollow Structural Sections: ASTM A 500, Grade B, structural tubing, Fy = 46 KSI.

D. Steel Pipe: ASTM A 53/A 53M, Type E or S, Grade B, Fy = 35 KSI.

E. Welding Electrodes: Comply with AWS requirements.

2.2 BOLTS, CONNECTORS, AND ANCHORS

A. High-Strength Bolts, Nuts, and Washers: ASTM A 325 (ASTM A 325M), Type 1, heavy-hex steel structural bolts; ASTM A 563, Grade C, (ASTM A 563M, Class 8S) heavy-hex carbon-steel nuts; and ASTM F 436 (ASTM F 436M), Type 1, hardened carbon-steel washers; all with plain finish.

1. Direct-Tension Indicators: ASTM F 959, Type 325 (ASTM F 959M, Type 8.8), compressible-washer type with plain finish.

B. Headed Anchor Rods: ASTM F 1554, Grade 36, straight.

1. Finish: Hot dip galvanized per ASTM A123 and A153.

C. Threaded Rods: ASTM A 36/A 36M.

1. Finish: Hot dip galvanized per ASTM A153.

2.3 Hot Dip Galvanizing

A. All fabricated steel shall be hot dip galvanized per ASTM A123 and A153.

2.4 GROUT

A. Nonmetallic, Shrinkage-Resistant Grout: ASTM C 1107, factory-packaged, nonmetallic aggregate grout, noncorrosive and nonstaining, mixed with water to consistency suitable for application and a 30-minute working time.

2.5 FABRICATION

A. Structural Steel: Fabricate and assemble in shop to greatest extent possible. Fabricate according to AISC's "Code of Standard Practice for Steel Buildings and Bridges" and AISC 360.

B. Fabrication shop shall have a minimum of three years experience in the field of steel fabrication. Steel erector shall have same minimum experience.

C. General: Shear and punch metals cleanly and accurately. Remove burrs and ease exposed edges. Form bent-metal corners to smallest radius possible without impairing work.

D. Fabricate steel pipe columns with steel top plates drilled for connection bolts and welded to pipe with continuous fillet weld same size as pipe wall thickness.

1. Provide base plates as scheduled on construction documents.

2.6 SHOP CONNECTIONS

A. High-Strength Bolts: Shop install high-strength bolts according to RCSC's "Specification for Structural Joints Using ASTM A 325 or A 490 Bolts" for type of bolt and type of joint specified.

1. Joint Type: Snug tightened.

B. Weld Connections: Comply with AWS D1.1/D1.1M for tolerances, appearances, welding procedure specifications, weld quality, and methods used in correcting welding work.

2.7 SOURCE QUALITY CONTROL

A. Testing Agency: Owner will engage an independent testing and inspecting agency to perform shop tests and inspections and prepare test reports.

1. Provide testing agency with access to places where structural-steel work is being fabricated or produced to perform tests and inspections.

B. Correct deficiencies in Work that test reports and inspections indicate does not comply with the Contract Documents.

C. Bolted Connections: Shop-bolted connections will be inspected according to RCSC's "Specification for Structural Joints Using ASTM A 325 or A 490 Bolts."

D. Welded Connections: In addition to visual inspection, shop-welded connections will be tested and inspected according to AWS D1.1/D1.1M and the following inspection procedures, at testing agency's option:

1. Liquid Penetrant Inspection: ASTM E 165.
2. Magnetic Particle Inspection: ASTM E 709; performed on root pass and on finished weld. Cracks or zones of incomplete fusion or penetration will not be accepted.
3. Ultrasonic Inspection: ASTM E 164.
4. Radiographic Inspection: ASTM E 94.

PART 3 - EXECUTION

3.1 EXAMINATION

A. Verify, with steel Erector present, elevations of concrete- and masonry-bearing surfaces and locations of anchor rods, bearing plates, and other embedments for compliance with requirements.

B. Proceed with installation only after unsatisfactory conditions have been corrected.

3.2 ERECTION

A. Set structural steel accurately in locations and to elevations indicated and according to AISC 303 and AISC 360.

B. Base Plates: Clean concrete- and masonry-bearing surfaces of bond-reducing materials, and roughen surfaces prior to setting plates. Clean bottom surface of plates.

1. Set plates for structural members on wedges, shims, or setting nuts as required.
2. Weld plate washers to top of baseplate.
3. Snug-tighten anchor rods after supported members have been positioned and plumbed. Do not remove wedges or shims but, if protruding, cut off flush with edge of plate before packing with grout.
4. Promptly pack grout solidly between bearing surfaces and plates so no voids remain. Neatly finish exposed surfaces; protect grout and allow to cure. Comply with manufacturer's written installation instructions for shrinkage-resistant grouts.

C. Maintain erection tolerances of structural steel within AISC's "Code of Standard Practice for Steel Buildings and Bridges."

3.3 FIELD CONNECTIONS

A. High-Strength Bolts: Install high-strength bolts according to RCSC's "Specification for Structural Joints Using ASTM A 325 or A 490 Bolts" for type of bolt and type of joint specified.

1. Joint Type: Snug tightened.

2. Joint Type (Pre-Engineered Frame): Bolted moment connection (turn-of-nut method)

B. Weld Connections: Comply with AWS D1.1/D1.1M for tolerances, appearances, welding procedure specifications, weld quality, and methods used in correcting welding work.

1. Comply with AISC 303 and AISC 360 for bearing, alignment, adequacy of temporary connections, and removal of paint on surfaces adjacent to field welds.

3.4 FIELD QUALITY CONTROL

A. Testing Agency: Owner will engage a qualified independent testing and inspecting agency to inspect field welds and high-strength bolted connections.

B. Bolted Connections: Bolted connections will be inspected according to RCSC's "Specification for Structural Joints Using ASTM A 325 or A 490 Bolts."

C. Welded Connections: Field welds will be visually inspected according to AWS D1.1/D1.1M.

1. In addition to visual inspection, field welds will be tested and inspected according to AWS D1.1/D1.1M and the following inspection procedures, at testing agency's option:

a. Liquid Penetrant Inspection: ASTM E 165.
b. Magnetic Particle Inspection: ASTM E 709; performed on root pass and on finished weld. Cracks or zones of incomplete fusion or penetration will not be accepted.
c. Ultrasonic Inspection: ASTM E 164.
d. Radiographic Inspection: ASTM E 94.

D. Correct deficiencies in Work that test reports and inspections indicate does not comply with the Contract Documents.

END OF SECTION 051200

Exhibit H

GENERAL CONDITIONS

ARTICLE 1- DEFINITIONS
Wherever used in these General Conditions or in the other CONTRACT DOCUMENTS the following terms have the meanings indicated which are applicable to both the singular and plural thereof:

ADDENDA- Written or graphic instruments issued prior to the opening of Bids which clarify, correct or change the bidding documents or the CONTRACT DOCUMENTS.

AGREEMENT- The written Agreement between OWNER and CONTRACTOR covering the Work to be performed; other CONTRACT DOCUMENTS are attached to the Agreement and made a part thereof as provided therein.

APPLICATION FOR PAYMENT- The form accepted by the ENGINEER which is to be used by CONTRACTOR in requesting progress or final payments and which is to include such supporting documentation as is required by the CONTRACT DOCUMENTS.

BID- The offer or proposal of the bidder submitted on the prescribed form setting forth the prices for the Work to be performed.

BONDS- Bid, performance and payment bonds and other instruments of security.

CHANGE ORDER- A document recommended by ENGINEER, which is signed by CONTRACTOR and OWNER and authorizes an addition, deletion or revisions in the Work, or an adjustment in the Contract Price or the Contract Time, issued on or after the Effective Date of the Agreement.

CONTRACT DOCUMENTS- The Agreement, Addenda (which pertain to the CONTRACT DOCUMENTS), CONTRACTOR'S Bid (including documentation accompanying the Bid and any post-Bid documentation submitted prior to the Notice of Award) when attached as an exhibit to the Agreement, the Bonds, these General Conditions, the Supplementary Conditions, the Specifications and the Drawings as the same are more specifically identified in the Agreement, together with all amendments, modifications and supplements issued pursuant to paragraphs 3.4 and 3.5 on or after the Effective Date of the Agreement.

CONTRACT PRICE- The moneys payable by OWNER to CONTRACTOR under the CONTRACT DOCUMENTS as stated in the Agreement.

CONTRACT TIME- The number of days (computed as provided in paragraph 17.2) or the date

stated in the Agreement for the completion of the Work.

CONTRACTOR- The person, firm or corporation with whom OWNER has entered into the Agreement.

DEFECTIVE- An adjective which when modifying the word Work refers to work that is unsatisfactory, faulty or deficient, or does not conform to the CONTRACT DOCUMENTS, or does not meet the requirements of any inspection, reference standard, test or approval referred to in the CONTRACT DOCUMENTS, or has been damaged prior to ENGINEER'S recommendation of final payment (unless responsibility for the protection thereof has been assumed by OWNER at Substantial Completion in accordance with paragraph 14.8 or 14.10).

DRAWING- The drawings which show the character and Scope of Work to be performed and which have been prepared or approved by ENGINEER and are referred to in the CONTRACT DOCUMENTS.

EFFECTIVE DATE OF THE AGREEMENT- The date indicated in the Agreement on which it becomes effective, but if no such date is indicated it means the date on which the Agreement is signed and delivered by the last of the two parties to sign and deliver.

ENGINEER- The person, firm or corporation named as such in the Agreement.

FIELD ORDER- A written order issued by ENGINEER which orders minor changes in the Work in accordance with paragraph 9.5 but which does not involve a change in the Contract Price or the Contract Time.

GENERAL REQUIREMENTS- Those described in Pages TS-1 through TS-7 of the Specifications.

LAW AND REGULATIONS; LAW OR REGULATIONS- Laws, rules, regulations, ordinances, codes and/or orders.

NOTICE OF AWARD- The written notice by OWNER or ENGINEER to the apparent successful bidder stating that upon compliance by the apparent successful bidder with the conditions precedent enumerated therein, within the time specified, OWNER will sign and deliver the Agreement.

NOTICE TO PROCEED- A written notice given by OWNER or ENGINEER to CONTRACTOR fixing the date on which the Contract Time will commence to run and on which the CONTRACTOR shall start to perform CONTRACTOR'S obligations under the CONTRACT DOCUMENTS.

OWNER- The public body or authority, corporation, association, firm or person with whom CONTRACTOR has entered into the Agreement and for whom the Work is to be provided.
PARTIAL UTILIZATION- Placing a portion of the Work in service for the purpose for which it is intended (or a related purpose) before reaching Substantial Completion for all the Work.

PROJECT- The total construction of which the Work to be provided under the CONTRACT DOCUMENTS may be the whole, or a part as indicated elsewhere in the CONTRACT DOCUMENTS.

RESIDENT PROJECT REPRESENTATIVE- The authorized representative of ENGINEER, who is assigned to the site or any part thereof.

SHOP DRAWINGS- All drawings, diagrams, illustrations, schedules and other date which are specifically prepared by or for CONTRACTOR to illustrate some portion of the Work and all illustrations, brochures, standard schedules, performance charts, instructions, diagrams and other information prepared by Supplier and submitted by CONTRACTOR to illustrate material or equipment for some portion of the Work.

SPECIFICATIONS- The portions of the CONTRACT DOCUMENTS consisting of written technical description of materials, equipment, construction systems, standards and workmanship as applied to the Work and certain administrative details applicable thereto.

SUB-CONTRACTOR- An individual, firm or corporation having a direct contract with CONTRACTOR or with any other Sub-Contractor for the performance of a part of the Work at the site.

SUBSTANTIAL COMPLETION- The Work (or a specified part thereof) which has progressed to the point where, in the opinion of ENGINEER as evidence by ENGINEER'S definitive certificate of Substantial Completion, it is sufficiently complete, in accordance with the CONTRACT DOCUMENTS, so that the Work, (or specified part) can be utilized for the purpose for which it is intended; or if there by no such certificate issued, when final payment is due in accordance with paragraph 14.13. The terms "substantially complete" and "substantially completed" as applied to any Work refer to Substantial Completion thereof.

SUPPLEMENTAL GENERAL CONDITIONS- The part of the CONTRACT DOCUMENTS which amends or supplements these General Conditions.

SUPPLIER- A manufacturer, fabricator, supplier, distributor, material-man or vendor.

UNDERGROUND FACILITIES- All pipelines, conduits, ducts, cables, wires, manholes, vaults, tanks, tunnels or other such facilities or attachments, and any encasements containing

such facilities which have been installed underground to furnish any of the following service or materials: electricity, gases, steam, liquid petroleum products, telephone or other communications, cable television, sewage and drainage removal, traffic or other control systems or water.

UNIT PRICE WORK- Work to be paid for on the basis of unit prices.

WORK- The entire completed construction or the various separately identifiable parts thereof required to be furnished under the CONTRACT DOCUMENTS. Work is the result of performing services, furnishing labor and furnishing and incorporating materials and equipment into the construction, all as required by the CONTRACT DOCUMENTS.

WORK DIRECTIVE CHANGE- A written directive to CONTRACTOR, issued on or after the Effective Date of the Agreement and signed by OWNER and recommended by ENGINEER, ordering an addition, deletion or revision in the Work, or responding to differing or unforeseen physical conditions under which the Work is to be performed as provided in paragraphs 4.2 and 4.3 or to emergencies under paragraph 6.22. A Work Directive Change may not change the Contract Price or the Contract Time, but is evidence that the parties expect that the change directed or documented by a Work Directive Change will be incorporated in a subsequently issued Change Order following negotiations by the parties as to its effect, if any, on the Contract Price or Contract Time as provided in paragraph 10.2.

WRITTEN AMENDMENT- A written amendment of the CONTRACT DOCUMENTS, signed by OWNER and CONTRACTOR on or after the Effective Date of the Agreement and normally dealing with the non-engineering or non-technical rather than strictly Work-related aspects of the CONTRACT DOCUMENTS.

ARTICLE 2- PRELIMINARY MATTERS DELIVERY OF BONDS:
2.1. When CONTRACTOR delivers the executed Agreements to OWNER, CONTRACTOR shall also deliver to OWNER such Bonds as Contract may be required to furnish in accordance with paragraph 5.1.

COPIES OF DOCUMENTS:

2.2. OWNER shall furnish to CONTRACTOR up to five copies (unless otherwise specified in the Supplementary Conditions) of the CONTRACT DOCUMENTS as are reasonably necessary for the execution of the Work. Additional copies will be furnished, upon request, at the cost of reproduction.

COMMENCEMENT OF CONTRACT TIME; NOTICE TO PROCEED:
2.3. The Contract Time will commence to run on the thirtieth day after the Effective Date of the Agreement, or if a Notice to Proceed is given, on the day indicated in the Notice to Proceed. A Notice to Proceed may be given at any time within thirty days after the Effective Day of the Agreement. In no event will the Contract Time commence to run later than the seventy-fifth day after the day of Bid Opening or the thirtieth day after the Effective Date of the Agreement, whichever date is earlier.

STARTING THE PROJECT:

2.4 CONTRACTOR shall start to perform the Work on the date when the Contract Time commences to run, but no Work shall be done at the site prior to the date on which the Contract

Time commences to run.

BEFORE STARTING CONSTRUCTION:

2.5 Before undertaking each part of the Work, CONTRACTOR shall carefully study and compare the Contract Documents and check and verify pertinent figures shown thereon and all applicable field measurements. CONTRACTOR shall promptly report in writing to ENGINEER any conflict, error or discrepancy which CONTRACTOR shall not be liable to OWNER or ENGINEER for failure to report any conflict, error or discrepancy in the CONTRACT DOCUMENTS, unless CONTRACTOR has actual knowledge thereof or should reasonably have known thereof.

2.6 Within ten days after the Effective Date of the Agreement (unless otherwise specified in the General Requirements), CONTRACTOR shall submit to ENGINEER FOR review:

2.6.1 An estimated progress schedule indicating the starting and completion dates of the various stages of the Work;

2.6.2 A preliminary schedule of Shop Drawings submissions; and

2.6.3 A preliminary schedule of values for all of the Work which will include quantities and prices of items aggregating the Contract Price and will subdivide the Work into component parts in sufficient detail to serve as the basis of progress payments during construction. Such prices will include an appropriate amount of overhead and profit applicable to each item of Work which will be confirmed in writing by CONTRACTOR at the time of submission.

2.7 Before any Work at the site is started, CONTRACTOR shall deliver to OWNER, with a copy to ENGINEER, certificates (and other evidence of insurance requested by OWNER) which CONTRACTOR is required to purchase and maintain in accordance with paragraphs 5.3 and 5.4.

PRE-CONSTRUCTION CONFERENCE:

2.8 Within twenty days after the Effective Date of the Agreement, but before CONTRACTOR starts the Work at the site, a conference attended by CONTRACTOR, ENGINEER and others as appropriate will be held to discuss the schedules referred to in paragraph 2.6, to discuss procedures for handling Shop Drawings and other submittals and for processing Applications for Payment, and to establish a working understanding among the parties as to the Work.

FINALIZING SCHEDULES:

2.9 At least ten days before submission of the First Application for Payment a conference attended by CONTRACTOR, ENGINEER and others as appropriate will be held to finalize the schedules submitted in accordance with paragraph 2.6. The finalized progress schedule will be

acceptable to ENGINEER as providing an orderly progression of the Work to completion within the Contract Time, but such acceptance will neither impose on ENGINEER responsibility for the progress or scheduling of the Work nor relieve CONTRACTOR from full responsibility therefore. The finalized schedule of Shop Drawing submissions will be acceptable to ENGINEER as providing a workable arrangement for processing the submissions. The finalized schedule of values will be acceptable to ENGINEER as to form and substance.

ARTICLE 3 - CONTRACT DOCUMENTS: INTENT, AMENDING, REUSE INTENT:
3.1. The CONTRACT DOCUMENTS comprise the entire Agreement between OWNER and CONTRACTOR concerning the WORK. The CONTRACT DOCUMENTS are complementary; what is called for by one is as binding as if called for by all. The CONTRACT DOCUMENTS will be construed in accordance with the law of the place of the Project.

3.2 It is the intent of the CONTRACT DOCUMENTS to describe a functionally complete Project (or part thereof) to be constructed in accordance with the CONTRACT DOCUMENTS. Any Work, materials or equipment that may reasonably be inferred from the CONTRACT DOCUMENTS as being required to produce the intended result will be supplied whether or not specifically called for. When words which have a well-known technical or trade meaning are used to describe Work, materials or equipment such works shall be interpreted in accordance with that meaning. Reference to standard specifications, manuals or codes of any technical society, organization or association, or to the Laws or Regulations in effect at the time of opening of Bids (or, on the Effective Date of the Agreement if there were no Bids), except as may be otherwise specifically stated. However, no provision of any referenced standard specifications, manual or code (whether or not specifically incorporated by reference in the CONTRACT DOCUMENTS) shall be effective to change the duties and responsibilities of OWNER, CONTRACTOR or ENGINEER, or any of their consultants, agents or employees from those set forth in the CONTRACT DOCUMENTS, nor shall it be effective to assign to ENGINEER, or any of ENGINEER'S consultants, agents or employees, any duty or authority to supervise or direct the furnishing or performance of the Work or any duty or authority to undertake responsibility contrary to the provisions of paragraphs 9.15 or 9.16. Clarifications and interpretations of the CONTRACT DOCUMENTS shall be issued by ENGINEER as provided in paragraph 9.4.

3.3 If, during the performance of the Work, CONTRACTOR finds a conflict, error or discrepancy in the CONTRACT DOCUMENTS, CONTRACTOR shall so report to ENGINEER in writing at once and before proceeding with the Work affected thereby shall obtain a written interpretation or clarification from ENGINEER; however, CONTRACTOR shall not be liable to OWNER or ENGINEER for failure to report any conflict, error or discrepancy on the CONTRACT DOCUMENTS unless CONTRACTOR had actual knowledge thereof or should reasonably have known thereof.

AMENDING AND SUPPLEMENTING CONTRACT DOCUMENTS:

3.4 The CONTRACT DOCUMENTS may be amended to provide for additions, deletions and revisions in the Work or to modify the terms and conditions thereof in one or more of the

following ways:

3.4.1. A formal Written Amendment,

3.4.2. A Change Order (Pursuant to paragraph 10.4), or

3.4.3. A Work Directive Change (Pursuant to paragraph 10.1).

As indicated in paragraphs 11.2 and 12.1, Contract Price and Contract Time may only be changed by a Change Order or Written Amendment.

3.5. In addition, the requirements of the CONTRACT DOCUMENTS may be supplemented, and minor variations and deviations in the Work may be authorized, in one or more of the following ways:

3.5.1. A Field Order (Pursuant to paragraph 9.5),

3.5.2. ENGINEER'S approval of a Shop Drawing or sample (pursuant to paragraphs 6.26 and 6.27), or

3.5.3. ENGINEER'S written interpretation or clarification (pursuant to paragraph 9.4).

REUSE OF DOCUMENTS:

3.6 Neither CONTRACTOR nor any Sub-Contractor or Supplier or other person or organization performing or furnishing any of the Work under a direct or indirect contract with OWNER shall have or acquire any title to or ownership rights in any of the Drawings, Specifications or other documents (or copies of any thereof) prepared by or bearing the seal of ENGINEER; and they shall not reuse any of them on extensions of the Project of any other project without written consent of the OWNER.

ARTICLE 4 - AVAILABILITY OF LANDS; PHYSICAL CONDITIONS; REFERENCE POINTS

AVAILABILITY OF LANDS:

4.1 OWNER shall furnish, as indicated in the CONTRACT DOCUMENTS, the lands upon which the Work is to be performed, Rights-of-Way and easements for access thereto, and such other lands which are designated for the use of CONTRACTOR. Easements for permanent structures or permanent changes in existing facilities will be obtained and paid for by OWNER, unless otherwise provided in the CONTRACT DOCUMENTS. If CONTRACTOR believes that any delay in OWNER'S furnishing these lands, Rights-of-Way or easements entitles CONTRACTOR to an extension of the Contract Time, CONTRACTOR may make a claim therefore as provided in Article 12. CONTRACTOR shall provide for all additional lands and

access thereto that may be required for temporary construction facilities or storage of materials and equipment.
PHYSICAL CONDITIONS:

4.2.1. Explorations and Reports: Reference is made to the Supplementary conditions for identification of those reports of explorations and tests of sub-surface conditions at the site that have been utilized by ENGINEER in preparation of the CONTRACT DOCUMENTS. CONTRACTOR may rely upon the accuracy of the technical data contained in such reports, but not upon non-technical data, interpretations for opinions contained therein or for the completeness thereof for CONTRACTOR'S purposes. Except as indicated in the immediately preceding sentence and in paragraph 4.2.6, CONTRACTOR shall have full responsibility with respect to sub-surface conditions at the site.

4.2.2. Existing Structures: Reference is made to the Supplementary Conditions for identification of those drawings of physical conditions in or relating to existing surface and sub- surface structures (except Underground Facilities referred to in paragraph 4.3) which are at or contiguous to the site that have been utilized by ENGINEER in preparation of the CONTRACT DOCUMENTS. CONTRACTOR may rely upon the accuracy of the technical data contained in such drawings, but not for the completeness thereof for CONTRACTOR'S purposes. Except as indicated in the immediately preceding sentence and in paragraph 4.2.6, CONTRACTOR shall have full responsibility with respect to physical conditions in or relating to such structures.
4.2.3. Report to Differing Conditions: If CONTRACTOR believes that:

4.2.3.1 Any technical data on which CONTRACTOR is entitled to rely as provided in paragraphs 4.2.1 and 4.2.2 is inaccurate, or

4.2.3.2. Any physical condition uncovered or revealed at the site differ materially from that indicated, reflected or referred to in the CONTRACT DOCUMENTS,

CONTRACTOR shall, promptly after becoming aware thereof and before performing any Work in connection therewith (except in an emergency as permitted by paragraph 6.22), notify OWNER and ENGINEER in writing about the inaccuracy or difference.

4.2.4. ENGINEER'S Review: ENGINEER will promptly review the pertinent conditions, determine the necessity of obtaining additional explorations or tests with respect thereto and advise OWNER in writing (with a copy to CONTRACTOR) of ENGINEER'S findings and conclusions.

4.2.5. Possible Document Change: If ENGINEER concludes that there is a material error in the CONTRACT DOCUMENTS or that because of newly discovered conditions a change in the CONTRACT DOCUMENTS is required, a Work directive Change or a Change Order will be issued as provided in Article 10 to reflect and document the consequences of the inaccuracy or difference.

4.2.6. Possible Price and Time Adjustments: In each such case, an increase or decrease in the

Contract Price or an extension or shortening of the Contract Time, or any combination thereof, will be allowable to the extend that they are attributable to any such inaccuracy or difference.

If OWNER and CONTRACTOR are unable to agree as to the amount or length thereof, a claim may be made thereof, as provided in Articles 11 and 12.

PHYSICAL CONDITIONS - UNDERGROUND FACILITIES:

4.3.1. Shown or Indicated: The information and data shown or indicated in the CONTRACT DOCUMENTS with respect to existing Underground Facilities at or contiguous to the site is based on information and data furnished to OWNER or ENGINEER by the owners of such Underground Facilities or by others. Unless it is otherwise expressly provided in the Supplementary Conditions:

4.3.1.1. OWNER and ENGINEER shall not be responsible for the accuracy or completeness of any such information or data; and,

4.3.1.2. CONTRACTOR shall have full responsibility for reviewing and checking all such information and data, for locating all Underground Facilities shown or indicated in the CONTRACT DOCUMENTS, for coordination of the Work with the owners of such Underground Facilities during construction, for safety and protection thereof as provided in paragraph 6.20 and repairing any damage thereto resulting from the Work, the cost of all of which will be considered as having been included in the Contract Price.

4.3.2. Not Shown or Indicated: If an Underground Facility is uncovered or revealed at or contiguous to the site which was not shown or indicated in the CONTRACT DOCUMENTS and which CONTRACTOR could not reasonable have been expected to be aware of, CONTRACTOR shall, promptly after becoming aware thereof and before performing and Work affected thereby (except in an emergency as permitted by paragraph 6.22), identify the owner of such Underground Facility and give written notice thereof to that owner and to OWNER and ENGINEER. ENGINEER will promptly review the Underground Facility to determine the extent to which the CONTRACT DOCUMENTS should be modified to reflect and document the consequences of the existence of the Underground Facility, and the CONTRACT DOCUMENTS will be amended or supplemented to the extent necessary. During such time, CONTRACTOR shall be responsible for the safety and protection of such Underground Facility as provided in paragraph 6.20. CONTRACTOR shall be allowed an increase in the Contract Price or an extension of the Contract Time, or both, to the extent that they are attributable to the existence of any Underground Facility that was not shown or indicated in the CONTRACT DOCUMENTS and which CONTRACTOR could not reasonably have been expected to be aware of. If the parties are unable to agree as to the amount or length thereof, CONTRACTOR may make a claim thereof as provided in Articles 11 and 12.

REFERENCE POINTS:

4.4. OWNER shall provide engineering surveys to establish reference points for construction

which in ENGINEER'S judgement are necessary to enable CONTRACTOR to proceed with the Work. CONTRACTOR shall be responsible for laying out the Work (unless otherwise specified in the General Requirements), shall protect and preserve the established reference points and shall make no changes or relocations without written approval of OWNER.

CONTRACTOR shall report to ENGINEER whenever any reference point is lost or destroyed or requires relocation because of necessary changes in grades or locations, and shall be responsible for the accurate replacement or relocation of such reference points by professionally qualified personnel.

ARTICLE 5 - BOND AND INSURANCE PERFORMANCE AND OTHER BONDS:
5.1. CONTRACTOR shall furnish performance and payment Bonds, each in an amount at least equal to Contract Price as security for the faithful performance and payment of all CONTRACTOR'S obligations under the CONTRACT DOCUMENTS. These Bonds shall remain in effect at least until one year after the date when final payment becomes due, except as otherwise provided by Law or Regulations or by the CONTRACT DOCUMENTS. CONTRACTOR shall also furnish such other Bond as are required by the Supplementary Conditions. All Bonds shall be in the forms prescribed by law or Regulation or by the Contract Documents and be executed by such sureties as are named in the current list of "Companies Holding Certificates of Authority as Acceptable Sureties on Federal Bonds and as Acceptable Reinsuring Companies" as published in Circular 570 (amended) by the Audit Staff Bureau of Accounts, U.S. Treasury Department. All Bonds signed by an agent must be accompanied by a certified copy of the authority to act.

5.2 If the surety on any Bond furnished CONTRACTOR is declared a bankrupt or becomes insolvent or its right to do business is terminated in any state where any part of the Project is located or it ceases to meet the requirements of paragraph 5.1, CONTRACTOR shall within five days thereafter substitute another Bond and Surety, both of which must be acceptable to OWNER.

CONTRACTOR'S LIABILITY INSURANCE:

5.3. CONTRACTOR shall purchase and maintain such comprehensive general liability and other insurance as is appropriate for the Work being performed and furnished and as will provide protection from claims set forth below which may arise out of or result form CONTRACTOR'S performance and furnishing of the Work and CONTRACTOR'S other obligations under the CONTRACT DOCUMENTS, whether it is to be performed or furnished by CONTRACTOR, by any Sub-Contractor, by anyone directly or indirectly employed by any of them to perform or furnish any of the Work, or by anyone for whose acts any of them may be liable:
5.3.1. Claims under worker's or workmen's compensation, disability benefits and other similar employee benefit acts;

5.3.2. Claims for damages because of bodily injury, occupational sickness or disease, or death of CONTRACTOR'S employees;

5.3.3. Claims for damages because of bodily injury, sickness or disease, or death of any person other than CONTRACTOR'S employees;

5.3.4. Claims for damages insured by personal injury liability coverage which are sustained (a) by any person as a result of an offense directly or indirectly related to the employment of such person by CONTRACTOR, (b) by any other person for any other reason;

5.3.5. Claims for damages, other than to the Work itself, because of injury to or destruction of tangible property wherever located, including loss of use resulting there from;
5.3.6. Claims arising out of operation of Laws or Regulations for damages because of bodily injury or death of any person or for damage to property; and

5.3.7. Claims for damages because of bodily injury or death of any person or property damage arising out of the ownership, maintenance or use of motor vehicle.

The insurance required by this paragraph 5.3 shall include the specific coverages and be written for not less than the limits of liability and coverages provided in the Supplemental General Conditions, or required by law, whichever is greater. The comprehensive general liability insurance shall include completed operations insurance. All of the policies of insurance so required to be purchased and maintained (or the certificates or other evidence thereof) shall contain a provision or endorsement that the coverage afforded will not be canceled, materially changed or renewal refused until at least thirty days' prior to a written notice been given to OWNER and ENGINEER by certified mail. All such insurance shall remain in effect until final payment and at all times thereafter when CONTRACTOR may be correcting, removing or replacing defective work in accordance with paragraph 13.12. In addition, CONTRACTOR shall maintain such completed operations insurance for at least two years after final payment and furnish OWNER with evidence of continuation of such insurance at final payment and one year thereafter.

CONTRACTUAL LIABILITY INSURANCE:

5.4. The comprehensive general liability insurance required by paragraph 5.3 will include contractual liability insurance applicable to CONTRACTOR'S obligations under paragraphs 6.30 and 6.31.

OWNER'S LIABILITY INSURANCE:

5.5. (Deleted) PROPERTY INSURANCE:
5.6. – 5.10 (Deleted)

WAIVER OF RIGHTS:
5.11.1. CONTRACTOR waives all rights against OWNER for all losses and damages caused by any of the perils covered by the policies of insurance provided under the Supplemental General Conditions and any other property insurance applicable to the Work, and also waives all such rights against the Sub-Contractors, ENGINEER, ENGINEER'S Consultants and all other parties

named as insured in such policies for losses and damages so caused. As required by paragraph 6.11, each sub-contract between CONTRACTOR, and a Sub-Contractor will contain similar waiver provisions by the Sub-Contractor in favor of OWNER, CONTRACTOR, ENGINEER, ENGINEER'S Consultants and all other parties named as insured. None of the above waivers shall extend to the rights that any of the insured parties may have to the proceeds of insurance held by OWNER as trustee or otherwise payable under any policy so issued.

5.11.2. CONTRACTOR intends that any policies provided under the Supplemental General Conditions shall protect all of the parties insured and provide primary coverage for all losses and damages caused by the perils covered thereby. Accordingly, all such policies shall contain provisions to the effect that in the event of payment of any loss or damage the insurer will have no rights or recovery against any of the parties named as insured or additional insured and if the insurers require separate waiver forms to be signed by ENGINEER or ENGINEER'S consultant or any Sub- Contractor, CONTRACTOR will obtain the same.

RECEIPT AND APPLICATION OF PROCEEDS:

5.12. (Delete)

5.13. (Delete)

ACCEPTANCE OF INSURANCE:

5.14. If OWNER has any objection to the coverage afforded by or other provisions of the insurance required to be purchased and maintained by CONTRACTOR in accordance with paragraphs 5.3 and 5.4 on the basis of its not complying with the CONTRACT DOCUMENTS, OWNER shall notify CONTRACTOR in writing thereof within ten days of the date or delivery of such certificates to OWNER in accordance with paragraph 2.7. CONTRACTOR shall each provide to OWNER, such additional information in respect of insurance provided by each as the OWNER may reasonably request. Failure by OWNER to give such notice of objection within the time provided shall constitute acceptance of such insurance purchased by the CONTRACTOR as complying with the CONTRACT DOCUMENTS.

PARTIAL UTILIZATION- PROPERTY INSURANCE:

5.15 If OWNER finds it necessary to occupy or use a portion or portions of the Work prior to Substantial Completion of all the Work, such use or occupancy may be accomplished in accordance with paragraph 14.10. The insurers of CONTRACTORS providing the property insurance shall consent to such use or occupancy by endorsement on the policy or policies, but the property insurance shall not be canceled or lapse on account of any such partial use or occupancy.

ARTICLE 6- CONTRACTOR'S RESPONSIBILITIES SUPERVISION AND SUPERINTENDENCE:

6.1. CONTRACTOR shall supervise and direct the Work competently and efficiently, devoting such attention thereto and applying such skill and expertise as may be necessary to perform the Work in accordance with the CONTRACT DOCUMENTS. CONTRACTOR shall be solely responsible for the means, methods, techniques, sequences and procedures of construction, but CONTRACTOR shall not be responsible for the negligence of others in the design or selection or a specific means, method, technique, sequence or procedure or construction which is indicated in and required by the CONTRACT DOCUMENTS. CONTRACTOR shall be responsible to see that the finished Work complies accurately with the CONTRACT DOCUMENTS.

6.2. CONTRACTOR shall keep on the Work at all times during its progress a competent resident superintendent, who shall not be replaced without written notice to OWNER and ENGINEER except under extraordinary circumstances. The superintendent will be CONTRACTOR'S representative at the site and shall have authority to act on behalf of CONTRACTOR. All communications given to the superintendent shall be as binding as if given to CONTRACTOR.

LABOR, MATERIALS AND EQUIPMENT:

6.3. CONTRACTOR shall provide competent, suitably qualified personnel to survey and lay out the Work and perform construction as required by the CONTRACT DOCUMENTS. CONTRACTOR shall at all times maintain good discipline and order at the site. Except in connection with the safety or protection of persons of the Work or property at the site or adjacent thereto, and except as otherwise indicated in the CONTRACT DOCUMENTS, all Work at the site shall be performed during regular working hours, and CONTRACTOR will not permit overtime work or the performance of Work on Saturday, Sunday or any legal holiday without OWNER'S written consent after prior written notice to ENGINEER.

6.4. Unless otherwise specified in the General Requirements, CONTRACTOR shall furnish and assume full responsibility for all materials, equipment, labor, transportation, construction equipment and machinery, tools, appliances, fuel, power, light, telephone, water, sanitary facilities, temporary facilities and all other facilities and incidentals necessary for the furnishing, performance, testing start-up, and completion of Work.

6.5. All materials and equipment shall be of good quality and new, except, as otherwise provided in the CONTRACT DOCUMENTS. If required by ENGINEER, CONTRACTOR shall furnish satisfactory evidence (including reports of required tests) as to the kind and quality of materials and equipment. All materials and equipment shall be applied, installed, connected, erected, used, cleaned and conditioned in accordance with the instructions of the applicable Supplier, except as otherwise provided in the CONTRACT DOCUMENTS; but no provision of any such instructions will be effective to assign to ENGINEER, or any of ENGINEER'S consultants, agents or employees, any duty or authority to supervise or direct the furnishing or performance of the Work or any duty or authority to undertake responsibility contrary to the provisions of paragraph 9.15 or 6.16.

ADJUSTING PROGRESS SCHEDULE:

6.6 CONTRACTOR shall submit to ENGINEER for acceptance (to the extent indicated in paragraph 2.9) adjustments in the progress schedule to reflect the impact thereon of new developments; these will conform generally to the progress schedule then in effect and additionally will comply with any provisions of the General Requirements applicable thereto.

SUBSTITUTES OR "OR-EQUAL" ITEMS:

6.7.1. Whenever materials or equipment are specified or described in the CONTRACT DOCUMENTS by using the name of a proprietary item or the name of a particular Supplier the naming of the item is intended to establish the type, function and quality required. Unless the name is followed by words indicating that no substitution is permitted, materials or equipment of other Suppliers may be accepted by ENGINEER if sufficient information is submitted by CONTRACTOR to allow ENGINEER to determine that the material or equipment proposed is equivalent or equal to that named. The procedure for review by ENGINEER will include the following as supplemented in the General Requirements. Requests for review of substitute items of material and equipment will not be accepted by ENGINEER from anyone other than CONTRACTOR. If CONTRACTOR wishes to furnish or use a substitute item of material or equipment, CONTRACTOR shall make written application to ENGINEER for acceptance thereof, certifying that the proposed substitute will perform adequately the functions and achieve the results called for by the general design, be similar and of equal substance to that specified and be suited to the same use as that specified. The application will state that the evaluation and acceptance of the proposed substitute will not prejudice CONTRACTOR'S achievement of Substantial Completion on time, whether or not acceptance of the substitutes for use in the Work will require a change in any of the CONTRACT DOCUMENTS (or in the provisions of any other direct contract with OWNER for Work on the Project) to adapt the design to the proposed substitute and whether or not incorporation or use of the substitute in connection with the Work is subject to payment or any license fee of royalty. All variations of the proposed substitute from that specified will be identified in the application and available maintenance, repair and replacement service will be indicated. The application will also contain an itemized estimate of all costs that will result directly or indirectly from acceptance of such substitute, including cost of redesign and claims or other contractors affected by the resulting change, all of which shall be considered by ENGINEER in evaluating the proposed substitute. ENGINEER may require CONTRACTOR to furnish at CONTRACTOR'S expense additional data about the proposed substitute.

6.7.2. If a specific means, method, technique, sequence or procedure of construction is indicated in or required by the CONTRACT DOCUMENTS, CONTRACTOR may furnish or utilize a substitute means, method, sequence, technique or procedure of construction acceptable to ENGINEER, if CONTRACTOR submits sufficient information to allow ENGINEER to determine that the substitute proposed is equivalent to that indicated or required by the CONTRACT DOCUMENTS. The procedure for review by ENGINEER will be similar to that provided in paragraph 6.7.1, as applied by ENGINEER and as may be supplemented in the

General Requirements.

6.7.3. ENGINEER will be allowed a reasonable time within which to evaluate each proposed substitute. ENGINEER will be sole judge of acceptability, and no substitute will be ordered, installed or utilized without ENGINEER'S prior written acceptance which will be evidenced by either a Change Order or an approved Shop Drawing. OWNER may require CONTRACTOR to furnish at CONTRACTOR'S expense a special performance guarantee or other surety with respect to any substitute. ENGINEER will record time required by ENGINEER and ENGINEER'S consultants in evaluating substitutions proposed by CONTRACTOR and in making changes in the CONTRACT DOCUMENTS occasioned thereby. Whether or not ENGINEER accepts a proposed substitute, CONTRACTOR shall reimburse OWNER for the charges of ENGINEER and ENGINEER'S consultants for evaluating each proposed substitute.

CONCERNING SUB-CONTRACTORS, SUPPLIERS AND OTHER:

6.8.1. CONTRACTOR shall not employ any Sub-Contractor, Supplier or other person or organization (including those acceptable to OWNER and ENGINEER as indicated in paragraph 6.8.2), whether initially or as a substitute, against whom OWNER or ENGINEER may have reasonable objection. CONTRACTOR shall not be required to employ any Sub- Contractor, Supplier or other person or organization to furnish or perform any of the Work against whom CONTRACTOR has reasonable objection.

If the Supplementary Conditions require the identity of certain Sub-Contractors, Suppliers or other persons or organizations (including those who are to furnish the principal items or materials and equipment) to be submitted to OWNER in advance of the specified date prior to the Effective Date of the Agreement for acceptance by OWNER and ENGINEER and if CONTRACTOR has submitted a list thereof in accordance with the Supplementary Conditions, OWNER'S or ENGINEER'S acceptance either in writing or by failing to make written objection thereto by the date indicated for acceptance or objection in bidding documents or the CONTRACT DOCUMENTS) of any such Sub-Contractor, Supplier or other person or organization so identified may be revoked on the basis of reasonable objection after due investigation, in which case CONTRACTOR shall submit an acceptable substitute, the Contract Price will be increased by the difference in the cost occasioned by such substitution and an appropriate Change Order will be issued or Written Amendment signed. No acceptance by OWNER or ENGINEER of any such Sub-Contractor, Supplier or other person or organization shall constitute a waiver of any right of OWNER or ENGINEER to reject defective Work.

6.9. CONTRACTOR shall be fully responsible to OWNER and ENGINEER for all acts and omissions of the Sub-Contractor's, Suppliers and other persons and organizations performing or furnishing any of the Work under a direct and indirect contract with CONTRACTOR just as CONTRACTOR is responsible for CONTRACTOR'S own acts and omissions. Nothing in the CONTRACT DOCUMENT shall create any contractual relationship between OWNER or ENGINEER and any such Sub-Contractor, Supplier or other person or organization, nor shall it create any obligation on the part of OWNER or ENGINEER to pay or to see to the payment of

any moneys due any such Sub-Contractor, Supplier or other person or organization except as may otherwise be required by Laws and Regulations.

6.10. The divisions and sections of the Specifications and the identifications of any Drawings shall not control CONTRACTOR in dividing the Work among Sub-Contractors or Suppliers or delineating the Work to be performed by any specified trade.

6.11 All Work performed for CONTRACTOR by a Sub-Contractor will be pursuant to an appropriate agreement between CONTRACTOR and Sub-Contractor which specifically binds the Sub-Contractor to the applicable terms and conditions of the CONTRACT DOCUMENTS for the benefit of OWNER and ENGINEER and contains waiver provisions as required by paragraph 5.11.

PATENT FEES AND ROYALTIES:

6.12. CONTRACTOR shall pay all license fees and royalties and assume all costs incident to the use in the performance of the Work or the incorporation in the Work of any invention, design, process, product or device which is the subject of patent rights or copyrights held by others. If a particular invention, design, process, product or device is specified in the CONTRACT DOCUMENTS for use in the performance of the Work and if to the actual knowledge of OWNER and ENGINEER its use is subject to patent rights or copyrights calling for the payment of any license fee or royalty to others, the existence of such rights shall be disclosed by OWNER in the CONTRACT DOCUMENTS. CONTRACTOR shall indemnify, hold harmless and defend at its cost, OWNER and ENGINEER and anyone directly or indirectly employed by either of them from and against all claims, damages, losses and expenses (including attorneys' fees and court and arbitration costs) arising out of any infringement of patent rights or copyrights incident to the use in the performance of the Work or resulting from the incorporation in the Work of any invention, design, process, product, or device not specified in the CONTRACT DOCUMENTS, and shall defend all such claims in connection with any alleged infringement of such rights.

6.13. Unless otherwise provided in the Supplemental General Conditions, CONTRACTOR shall obtain and pay for all construction permits and licenses. OWNER shall assist CONTRACTOR, when necessary, in obtaining such permits and licenses. CONTRACTOR shall pay all governmental charges and inspection fees necessary for the prosecution of the Work, which are applicable at the time of opening of Bids, or if there are not Bids on the Effective Date of the Agreement. CONTRACTOR shall pay all charges of utility owners for connections to the Work, and OWNER shall pay all charges of such utility owners for capital costs related thereto such as plant investment fees.

LAWS AND REGULATIONS:

6.14.1. CONTRACTOR shall give all notices and comply with all laws and Regulations applicable to furnishing and performing of the Work. Except where otherwise expressly required by applicable Laws and Regulations, neither OWNER nor ENGINEER shall be responsible for

monitoring CONTRACTOR'S compliance with any Law or Regulations.

6.14.2 If CONTRACTOR observes that the Specification of Drawings are at variance with any Laws or Regulations, CONTRACTOR shall give ENGINEER prompt written notice thereof, any necessary changes will be authorized by one of the methods indicated in paragraph 3.4.

If CONTRACTOR performs any Work knowing or having reason to know that it is contrary to such Laws or Regulations, and without such notice to ENGINEER, CONTRACTOR shall bear all costs arising therefrom; however, it shall not be CONTRACTOR'S primary responsibility to made certain that the Specifications and Drawings are in accordance with such Laws and Regulations.

6.15. CONTRACTOR shall pay all sales, consumer use and other similar taxes required to be paid by CONTRACTOR in accordance with the Laws and Regulations of the place of the Project which are applicable during the performance of the Work.

USE OF PREMISES:

6.16. CONTRACTOR shall confine construction equipment, the storage of materials and equipment and the operations of workers to the Project site and land and areas identified in and permitted by the CONTRACT DOCUMENTS and other land and areas permitted by Laws and Regulations, rights-of-way, permits and easements, and shall not unreasonably encumber the premises with construction equipment or equipment. CONTRACTOR shall assume full responsibility for any damage to any such land or area, or to the owner or occupant thereof or of any land or areas contiguous thereto, resulting from the performance of the Work. Should any claim be made against OWNER or ENGINEER by any such owner or occupant because of the performance of the Work, CONTRACTOR shall promptly attempt to settle with such other party by agreement or otherwise resolve the claim by at law. CONTRACTOR shall, to the fullest extend permitted by Law and Regulations, indemnify and hold OWNER and ENGINEER harmless from and against all claims, damages, losses and expenses (including, but not limited to, fees of Engineers, Architects, Attorneys and other professional and court and arbitration costs) arising directly, indirectly or consequently out of any action, legal or equitable, brought by any such other party against OWNER or ENGINEER to the extent based on a claim arising out of work done by CONTRACTOR under the CONTRACT DOCUMENTS. It is the expressed intention of the parties hereto, both OWNER and CONTRACTOR, that the indemnity provided for in this paragraph is indemnity by CONTRACTOR to indemnify and protect OWNER from the consequences of OWNER'S own negligence, whether that negligence is the sole or a concurring cause of the injury, death or damage.

6.17. During the progress of the Work, CONTRACTOR shall keep the premises free from such accumulations of waste materials, rubbish and other debris resulting from the Work. At the completion of the Work CONTRACTOR shall remove all waste materials, rubbish and debris from and about the premises as well as all tools, appliances, construction equipment and machinery and surplus materials, and shall leave the site clean and ready for occupancy by OWNER. CONTRACTOR shall restore to original condition all property not designated for

alteration by the CONTRACT DOCUMENTS.

6.18. CONTRACTOR shall not load nor permit any part of any structure to be loaded in any manner that will endanger the structure, nor shall CONTRACTOR subject any part of the Work or adjacent property to stresses or pressures that will endanger it.

DOCUMENTS:

6.19. CONTRACTOR shall maintain in a safe place at the site one record copy of all Drawings, Specifications, Addenda, Written Amendments, Change Orders, Work Directive Changes, Field Orders and Written Interpretations and Clarifications (issued pursuant to paragraph 9.4) in good order and annotated to show all changes made during construction. These record documents together with all approved samples and a counterpart of all approved Shop Drawings will be available to ENGINEER for reference. Upon completion of the Work, these Record Documents, Samples and Shop Drawings will be delivered to ENGINEER for OWNER.

SAFETY AND PROTECTION:

6.20. CONTRACTOR shall be responsible for initiation, maintaining and supervising all safety precautions and programs in connection with the Work. CONTRACTOR shall take all necessary precautions for the safety of, and shall provide the necessary protection to prevent damage, injury or loss to:

6.20.1. All employees on the Work and other persons and organizations who may be affected thereby;

6.20.2 All the Work and materials and equipment to be incorporated therein, whether in storage on or off the site.

6.20.3. Other property at the site or adjacent thereto, including trees, shrubs, lawns, walks, pavements, roadways, structures, utilities and Underground Facilities not designated for removal, relocation or replacement in the course of construction.

CONTRACTOR shall comply with all applicable Laws and Regulations of any public body having jurisdiction for the safety of persons or property or to protect them from damage, injury or loss; and shall erect and maintain all necessary safeguards for such safety and protection. CONTRACTOR shall notify owners of adjacent property and of Underground Facilities and utility owners when prosecution of the Work may affect them, and shall cooperate with them in the protection, removal, relocation and replacement of their property. All damages, injury or loss to any property referred to in paragraphs 6.20.2 or 6.20.3 caused, directly or indirectly, in whole or in part, by CONTRACTOR, and Sub-Contractor, Supplier or any other person or organization directly or indirectly employed by any of them to perform or furnish any of the Work or anyone for whose acts any of them may be liable, shall be remedied by CONTRACTOR (except damage or loss attributable to the fault of Drawings or Specifications or to the acts or omission of

OWNER or ENGINEER or anyone employed by either of them or anyone for whose acts either of them may be liable, and not attributable, directly or indirectly, in whole or in part, to the fault or negligence of CONTRACTOR). CONTRACTOR'S duties and responsibilities for the safety and protection of the Work shall continue until such time as all the Work is completed and ENGINEER has issued a notice to OWNER and CONTRACTOR in accordance with paragraph 14.13 that the Work is acceptable (except as otherwise expressly provided in connection with Substantial Completion.

6.21. CONTRACTOR shall designate a responsible representative at the site whose duty shall be the prevention of accidents. This person shall be CONTRACTOR'S superintendent unless otherwise designated in writing by CONTRACTOR to OWNER.

EMERGENCIES:

6.22. In emergencies affecting the safety or protection of persons or the Work or property at the site or adjacent thereto, CONTRACTOR, without special instruction or authorization from ENGINEER or OWNER, is obligated to act to prevent threatened damage, injury or loss. CONTRACTOR shall give ENGINEER prompt written notice if CONTRACTOR believes that any significant changes in the Work or variations from the CONTRACT DOCUMENTS have been caused thereby. If ENGINEER determines that a change in the CONTRACT DOCUMENTS is required because of the action taken in response to any emergency, a Work Directive Change or Change Order will be issued to document the consequences of the changes or variations.

SHOP DRAWINGS AND SAMPLES:

6.23. After checking and verifying all field measurements and complying with applicable procedures specified in the General Requirements, CONTRACTOR shall submit to ENGINEER for review an approval in accordance with the accepted schedule of Shop Drawing submissions (see paragraph 2.9), or for other appropriate action if so indicated in the Supplementary Conditions, five copies (unless otherwise specified in General Requirements) of all Shop Drawings, which bear a stamp written indication that CONTRACTOR has satisfied CONTRACTOR'S responsibilities under the CONTRACT DOCUMENTS with respect to the review of the submission. All submissions will be identified as ENGINEER may require. The data shown on the Shop Drawings will be completed with respect to quantities, dimensions, specified performance and design criteria, materials, and similar data to enable ENGINEER to review the information as required.

6.24. CONTRACTOR shall also submit to ENGINEER for review and approval with such promptness as to cause no delay in Work, all samples required by the CONTRACT DOCUMENTS. All samples will have been checked by and accompanied by a specific written indication that CONTRACTOR has satisfied CONTRACTOR'S responsibilities under the CONTRACT DOCUMENTS with respect to the review of the submission and will be identified clearly as to material, Supplier, pertinent data such as catalog numbers and the use for which intended.

6.25.1. Before submission of each Shop Drawing or sample CONTRACTOR shall have determined and verified all quantities, dimensions, specified performance criteria, installation requirements, materials, catalog numbers and similar data with respect thereto and reviewed or coordinated each Shop Drawing or sample with other Shop Drawings and samples and with the requirements of the Work and the CONTRACT DOCUMENTS.

6.25.2. At the time of each submission, CONTRACTOR shall give ENGINEER specific written notice of each variation that the Shop Drawings or samples may have from the requirements of the CONTRACT DOCUMENTS, and in addition, shall cause a specific notation to be made on each Shop Drawing submitted to ENGINEER for review and approval of each such variation.

ENGINEER will review and approve with reasonable promptness Shop Drawings and samples, ENGINEER'S review and approval will be only for conformance with the design concept of the Project and for compliance with the information given in the CONTRACT DOCUMENTS and shall not extend to means, methods, techniques, sequences or procedures of construction (except where a specific means, method, technique, sequence or procedure of construction is indicated in or required by the CONTRACT DOCUMENTS) or to safety precautions or programs incident thereto. The review and approval of a separate item as such will not indicate approval of the assembly in which the item functions. CONTRACTOR shall make corrections required by ENGINEER, and shall return the required number of corrected copies of Shop Drawings and submit as required new samples for review and approval. CONTRACTOR shall direct specific attention in writing to revisions other than the corrections called by ENGINEER or previous submittals.

6.27. ENGINEER'S review and approval of Shop Drawings or samples shall not relieve CONTRACTOR from responsibility for any variation from the requirements of the CONTRACT DOCUMENTS unless CONTRACTOR has in writing called ENGINEER'S attention to each such variation at the time of submission as required by paragraph 6.25.2 and ENGINEER has given written approval of each such variation by a specific written notation thereof incorporated in or accompanying the Shop Drawing or sample approval; nor will any approval by ENGINEER relieve CONTRACTOR from responsibility for errors or omissions in the Shop Drawings or from responsibility for having complied with the provisions of paragraph 6.25.1.

6.28. Where a Shop Drawing or sample is required by the Specifications, any related Work performed prior to ENGINEER'S review and approval of the pertinent submission will be the sole expense and responsibility of CONTRACTOR.

CONTINUING THE WORK:

CONTRACTOR shall carry on the Work and adhere to the progress schedule during all disputes or disagreements with OWNER. No Work shall be delayed or postponed pending resolution of any disputes or disagreements, except as permitted by paragraph 15.5 or as CONTRACTOR and OWNER may otherwise agree in writing.

INDEMNIFICATION:

6.30. To the fullest extent permitted by Laws and Regulations CONTRACTOR shall indemnify and hold harmless OWNER and ENGINEER and their consultants, agents and employees from and against all claims, damages, losses and expense, direct, indirect or consequential (including but not limited to fees and charges of Engineers, Architects, Attorneys and other professional and court and arbitration costs) arising out of or resulting from the performance of the Work, provided that any such claim, damage, loss or expense (a) is attributable to bodily injury, sickness, disease or death, or to injury to or destruction of tangible property (other than the Work itself) including the loss of use resulting there from and (b) is caused in whole or in part by any negligent act or omission of OWNER, CONTRACTOR, and Sub-Contractor, any person or organization directly or indirectly employed by any of them to perform or furnish any of the Work or anyone for whose acts any of them may be liable, regardless of whether or not it is caused in part by a partly indemnified hereunder or arises by or is imposed by Law and Regulations regardless of the negligence of any such party. It is the expressed intention of the parties hereto, both OWNER and CONTRACTOR, that the indemnity provided for in this paragraph is indemnity by CONTRACTOR to indemnify and protect OWNER from the consequences of OWNER'S own negligence, whether that negligence is the sole or concurring cause of the injury, death or damage.

6.31. In any and all claims against OWNER or ENGINEER or any of their consultants, agents or employees by any employee or Contractor, any Sub-Contractor, and person or organization directly or indirectly employed by any of them to perform or furnish any of the Work or anyone for whose acts any of them may be liable, the indemnification obligation under paragraph 6.30 shall not be limited in any way by any limitation on the amount or type of damages, compensation or benefits payable by or for CONTRACTOR or any Sub-Contractor or other person or organization under workers' or workmen's compensation acts, disability benefit acts or other employee benefit acts.

6.32. The obligations of CONTRACTOR under paragraph 6.30 shall not exceed to the liability of ENGINEER, ENGINEER'S consultants, agents or employees arising out of the preparation or approval or maps, drawings, opinions, reports, surveys, Change Orders, designs or Specifications.

ARTICLE 7-OTHER WORK RELATED WORK AT SITE:

7.1. OWNER may perform other work related to the Project at the site by OWNER'S own forces, have other work performed by utility owners or let other direct contracts therefore which shall contain General Conditions similar to these. If the fact that such other work is to be performed was not noted in the CONTRACT DOCUMENTS, written notice thereof will be given to CONTRACTOR prior to starting any such other work; and if CONTRACTOR believes that such performance will involve additional expense to CONTRACTOR or requires additional time and the parties are unable to agree as to the extent thereof, CONTRACTOR may make a claim therefore as provided in Articles 11 and 12.

7.2. CONTRACTOR shall afford each utility owner and other contractor who is a party to such a direct contract (or OWNER, if OWNER is performing the additional work with OWNER'S employees) proper and safe access to the site and a reasonable opportunity for the introduction and storage of materials and equipment and the execution of such work, and shall properly connect and coordinate the Work with theirs. CONTRACTOR shall do all cutting, fitting and patching of the Work that may be required to make its several parts come together properly and integrate with such other work. CONTRACTOR shall not endanger any work of others by cutting, excavating or otherwise altering their work and will only cut or alter their work with the written consent of ENGINEER and the others whose work will be affected. The duties and responsibilities of CONTRACTOR under this paragraph are for the benefit of such utility owners and other contractors to the extent that there are comparable provisions for the benefit of CONTRACTOR in said direct contracts between OWNER and such utility owners and other contractors.

7.3. If any part of CONTRACTOR'S Work depends for proper execution or results upon the work of any such other contractor or utility owner (or OWNER), CONTRACTOR shall inspect and promptly report to ENGINEER in writing any delays, defects or deficiencies in such work that render it unavailable or unsuitable for such proper execution and results. CONTRACTOR'S failure to report will constitute and acceptance of the other work as fit and proper for integration with CONTRACTOR'S work except for latent or non-apparent defects in the other work.

COORDINATION:

7.4. If OWNER contracts with others for the performance of other work on the Project at the site, the person or organization who will have authority and responsibility for coordination of the activities among the various prime contractors will be identified in the Supplementary Conditions, and the specific matters to be covered by such authority and responsibility will be itemized, and the extent of such authority and responsibilities will be provided, in the Supplementary Conditions. Unless otherwise provided in the Supplementary Conditions, neither OWNER nor ENGINEER shall have any authority or responsibility in respect of such coordination.

ARTICLE 8-OWNER'S RESPONSIBILITIES

8.1. OWNER shall issue all communications to CONTRACTOR through ENGINEER.

8.2. In case of termination of the employment or ENGINEER, OWNER shall appoint an engineer against whom CONTRACTOR makes no reasonable objection, whose status under the CONTRACT DOCUMENTS shall be that of the former ENGINEER. Any dispute in connection with such appointment shall be subject to arbitration.

OWNER shall furnish the data required of OWNER under the CONTRACT DOCUMENTS promptly and shall make payments to CONTRACTOR promptly after they are due as provided

in paragraphs 14.4 and 14.14.

8.4. OWNER'S duties in respect of providing lands and easements and providing engineering surveys to establish reference points are set forth in paragraphs 4.1 and 4.4. Paragraph 4.2 refers to OWNER'S identifying and making available to CONTRACTOR copies of reports of explorations and tests of sub-surface conditions at the site and existing structures which have been utilized by ENGINEER in preparing the Drawings and Specifications.

8.5. (Delete)

8.6 OWNER is obliged to execute Change Orders as indicated in paragraph 10.4.

8.7. OWNER'S responsibility in respect of certain inspections, tests and approvals is set forth in paragraph 13.4.

8.8. In connection with OWNER'S right to stop Work or suspend Work, see paragraph 13.10 and 15.1. Paragraph 15.2 deals with OWNER'S right to terminate services on CONTRACTOR under certain circumstances

ARTICLE 9-ENGINEER'S STATUS DURING CONSTRUCTION OWNER'S REPRESENTATIVE:

9.1. ENGINEER will be OWNER'S representative during the construction period. The duties and responsibilities and the limitations of authority of ENGINEER as OWNER'S representative during construction are set forth in the CONTRACT DOCUMENTS and shall not be extended without written consent of OWNER and ENGINEER.

VISITS TO SITE:

9.2. ENGINEER will make visits to the site at intervals appropriate to the various stages of construction to observe the progress and quality of the executed Work and to determine, in general, if the Work is proceeding in accordance with the CONTRACT DOCUMENTS. ENGINEER will not be required to made exhaustive or continuous on-site inspections to check the quality or quantity of the Work. ENGINEER'S efforts will be directed toward providing for OWNER a greater degree of confidence that the complete Work will conform to the CONTRACT DOCUMENTS. On the basis of such visits and on-site observations as an experienced and qualified design professional, ENGINEER will keep OWNER informed of the progress of the Work and will endeavor to guard OWNER against defects and deficiencies in the Work.

PROJECT REPRESENTATION:

9.3. If OWNER and ENGINEER agree, ENGINEER will furnish a Resident Project Representative to assist ENGINEER in observing the performance of the Work. The duties, responsibilities and limitations of authority of any such Resident Project Representative and assistants will be as provided in the Supplemental Conditions. If OWNER designates another

agent to represent OWNER at the site who is not the ENGINEER'S agent or employee, the duties, responsibilities and limitations of authority of such other person will be provided in Supplemental Conditions.

CLARIFICATIONS AND INTERPRETATIONS:

9.4. ENGINEER will issue with reasonable promptness such written clarifications or interpretations of the requirements of the CONTRACT DOCUMENTS (in the form of Drawings or otherwise) as ENGINEER may determine necessary, which shall be consistent with or reasonably inferable from the overall intent of the CONTRACT DOCUMENTS. If CONTRACTOR believes that a written clarification or interpretation justifies an increase in the Contract Price or an extension of the Contract Time and the parties are unable to agree to the amount or extent thereof, CONTRACTOR may make a claim therefore as provided in Article 11 or Article 12.

AUTHORIZED VARIATIONS IN WORK:

9.5. ENGINEER may authorize minor variations in the Work from the requirements of the CONTRACT DOCUMENTS which do not involve an adjustment in the Contract Price of the Contract Time and are consistent with the overall intent of the CONTRACT DOCUMENTS. These may be accomplished by a Field Order and will be binding on OWNER, and also on CONTRACTOR who shall perform the Work involved promptly. If CONTRACTOR believes that a Field Order justifies an increase in the Contract Price or an extension of the Contract Time and the parties are unable to agree as to the amount thereof, CONTRACTOR may make a claim therefor as provided in Article 11 or 12.

REJECTING DEFECTIVE WORK:

9.6. ENGINEER will have authority to disapprove or reject Work which ENGINEER believes to be defective, and will also have authority to require special inspection or testing of the Work as provided in paragraph 13.9, whether or not the Work is fabricated, installed or complete.

SHOP DRAWINGS, CHANGE ORDERS AND PAYMENTS:

9.7. In connection with ENGINEER'S responsibility for Shop Drawings and samples, see paragraphs 6.23 through 6.29 inclusive.

9.8. In connection with ENGINEER'S responsibility as to Change Orders, see Articles 10,11, and 12.

9.9. In connection with ENGINEER'S responsibility in respect of Applications for Payment, etc, see Article 14.

DETERMINATIONS FOR UNIT PRICES:

9.10. (Delete)

DECISIONS ON DISPUTES:

9.11. ENGINEER will be the initial interpreter of the requirements of the CONTRACT DOCUMENTS and judge of the acceptability of the Work thereunder. Claims, disputes and other matters relating to the acceptability of the Work or the interpretation of the requirements of the CONTRACT DOCUMENTS pertaining to the performance and furnishing of the Work and claims under Articles 11 and 12 in respect of changes in the Contract Price or Contract Time will be referred initially to ENGINEER in writing with a request for a formal decision in accordance with this paragraph, which ENGINEER will render in writing within a reasonable time. Written notice of each such claim, dispute and other matter will be delivered by the claimant to ENGINEER and the other party to the Agreement promptly (but in no event later than thirty days) after the occurrence of the event giving rise thereto, and written supporting data will be submitted to ENGINEER and the other party within sixty days after such occurrence unless ENGINEER allows and additional period of time to ascertain more accurate data in support of the claim.

9.12. When functioning as interpreter and judge under paragraphs 9.10 and 9.11, ENGINEER will not show partiality to OWNER or CONTRACTOR and will not be liable in connection with any interpretation or decision rendered in good faith in such capacity. Then rendering of a decision by ENGINEER pursuant to paragraphs 9.10 and 9.11 with respect to any such claim, dispute or other matter (except and which have been waived by the making or acceptance of final payments as provided in paragraph 14.16) will be a condition precedent to any exercise by OWNER or CONTRACTOR or such rights or remedies as either may otherwise have under the CONTRACT DOCUMENTS or by Laws or Regulations in respect of any such claim, dispute or other matter.

LIMITATIONS ON ENGINEER'S RESPONSIBILITIES:

9.13 Neither ENGINEER'S authority to act under this Article 9 or elsewhere in the CONTRACT DOCUMENTS nor any decision made by ENGINEER in good faith either to exercise or not exercise such authority shall give rise to any duty or responsibility of ENGINEER to CONTRACTOR, any Sub-Contractor, any Supplier, or any other person or organization performing any of the Work, or to any surety for any of them.

9.14. Whenever in the CONTRACT DOCUMENTS the terms "as ordered", "as directed", "as required", "as allowed", "as approved" or terms of like effect or import are used, or the adjectives "reasonable", "suitable", "acceptable", "proper", or "satisfactory" or adjectives of the effect or import are used to describe a requirement, direction, review or judgment of ENGINEER as to the Work, it is intended that such requirement, direction review or judgment will be solely to evaluate the Work for compliance with the CONTRACT DOCUMENTS (unless there is a specific statement indicating otherwise). The use of any such term or adjective shall not be effective to assign to ENGINEER any duty or authority to supervise or direct the furnishing or

performance of the Work or any duty or authority to undertake responsibility contrary to the provisions of paragraphs 9.15 and 6.16.

9.15. ENGINEER will not be responsible for CONTRACTOR'S means, methods, technique, sequences or procedures of construction, or the safety precautions and programs incident thereto, and ENGINEER will not be responsible for CONTRACTOR'S failure to perform or furnish the Work in accordance with the CONTRACT DOCUMENTS.

9.16. ENGINEER will not be responsible for the acts or omissions of the CONTRACTOR or of any Sub-Contractor, any Supplier or any other person or organization performing or furnishing any of the Work.

ARTICLE 10-CHANGES IN THE WORK

Without invalidating the Agreement and without notice to any surety, OWNER may, at any time or from time to time, order additions, deletions or revisions in the Work; these will be authorized, be a written amendment, a Change Order or a Work Directive Change. Upon receipt of any such document, CONTRACTOR shall promptly proceed with the Work involved which will be performed under the applicable conditions of the CONTRACT DOCUMENTS (except as otherwise specifically indicated).

10.2. If OWNER and CONTRACTOR are unable to agree as to the extent if any of an increase or decrease in the Contract Price or an extension of shortening of the Contract Time that should be allowed as a result of a work directive change, a claim may be made therefore as provided in Article 11 or Article 12.

10.3. CONTRACTOR shall not be entitled to any increase in the Contract Price or an extension of the Contract Time with respect to any Work performed that is not required by the CONTRACT DOCUMENTS as amended modified and supplemented as provided in paragraphs 3.4 and 3.5, except in the case of any emergency as provided in paragraph 6.22 and except in the case of uncovering Work as provided in paragraph 13.9.

10.4. OWNER and CONTRACTOR shall execute appropriate Change Orders (or Written Amendments) covering:

10.4.1. Changes in the Work that are ordered by OWNER pursuant to paragraph 10.1, are required because of acceptance of defective Work under paragraph 13.13 or correcting defective Work under paragraph 13.14, or are agreed to by the parties;

10.4.2. Changes in the Contract Price or Contract Time which are agreed to by the parties; and

10.4.3. Changes in the Contract Price or Contract Time which embody the substance of any written decision rendered by ENGINEER pursuant to paragraph 9.11, provided that, in lieu of executing any such Change Order, an appeal may be taken from any such decision in accordance

with the provisions of the CONTRACT DOCUMENTS and applicable laws and regulations, but during any such appeal, CONTRACTOR shall carry on the Work and adhere to the progress schedule as provided in paragraph 6.29.

10.5. If notice of any change affecting the general scope of the Work of the provisions of the CONTRACT DOCUMENTS (including, but not limited to, Contract Price or Contract Time) is required by the provisions of any Bond to be given to a surety, the giving of any such notice will be CONTRACTOR'S responsibility, and the amount of each applicable Bond will be adjusted accordingly.

ARTICLE 11-CHANGE OR CONTRACT PRICE

11.1. The Contract Price constitutes the total compensation (subject to authorized adjustments) payable to CONTRACTOR for performing the Work. All duties, responsibilities and obligations assigned to or undertaken by CONTRACTOR shall be at his expense without change in the Contract Price.

11.2. The Contract Price may only be changed by a Change Order or by a Written Amendment. Any claim for an increase or decrease in the Contract Price shall be based on written notice delivered by the party making the claim to the other party and to ENGINEER promptly (but in no event later than thirty days) after the occurrence of the event giving rise to the claim and stating the general nature of the claim. Notice of the amount of the claim with supporting data shall be delivered within sixty days after such occurrence (unless ENGINEER allows an additional period of time to ascertain more accurate data in support of the claim) and shall be accompanied by claimant's written statement that the amount claimed covers all known amounts (direct, indirect and consequential) to which the claimant is entitled as a result of the occurrence of said event. All claims for adjustment in the Contract Price shall be determined by ENGINEER in accordance with paragraph 9.11 if OWNER and CONTRACTOR cannot otherwise agree on the amount involved. No claim for an adjustment in the Contract Price will be valid if not submitted in accordance with this paragraph 11.2.

11.3. The value of any Work covered by a Change Order of any claim for an increase or decrease in the Contract Price shall be determined in of the following ways:

11.3.1. (Delete)

11.3.2. By mutual acceptance of a lump sum, which at the discretion of OWNER may be based in whole or in part on the same unit costs outlined in the Bid included in the CONTRACT DOCUMENTS which may include an allowance for overhead and profit.

ARTICLE 12-CHANGE OF CONTRACT TIME

12.1. The Contract Time may only be changed by a Change Order or a Written Amendment. Any Claim for an extension or shortening of the Contract Time shall be based on written notice delivered by the party making the claim to the other party and to ENGINEER promptly (but in

no event later than thirty days) after the occurrence of the event giving rise to the claim and stating the general nature of the claim. Notice of the extent of the claim with supporting data shall be delivered within sixty days after such occurrence (unless ENGINEER allows an additional period of time to ascertain more accurate data in support of the claim) and shall be accompanied by the claimant's written statement that the adjustment claimed is the entire adjustment to which the claimant has reason to believe it is entitled as a result of the occurrence of said event.

All claims for adjustment in the Contract Time shall be determined by ENGINEER in accordance with paragraph 9.11 if OWNER and CONTRACTOR cannot otherwise agree. No claim for an adjustment in the Contract Time will be valid if not submitted in accordance with the requirements of this paragraph 12.1.

12.2. The Contract Time will be extended in an amount to time lost due to delays beyond the control of CONTRACTOR if a claim is made therefore as provided in paragraph 1.1. Such delays shall include, but not be limited to, acts or neglect by OWNER or others performing additional work as contemplated by Article 7, or to fires, floods, labor disputes, epidemics, abnormal weather conditions or acts of God.

12.3. All time limits stated in the CONTRACT DOCUMENTS are of the essence of the Agreement. The provisions of this Article 12 shall not exclude recovery for damages (including but not limited to fees and charges of engineers, architects, attorneys and other professionals and court and arbitration costs) for delay by either party.

ARTICLE 13 - WARRANTY AND GUARANTEE; TESTS AND INSPECTIONS; CORRECTIONS, REMOVAL OR ACCEPTANCE OF DEFECTIVE WORK

WARRANTY AND GUARANTEE:

13.1. CONTRACTOR warrants and guarantees to OWNER and ENGINEER that all Work will be in accordance with the CONTRACT DOCUMENTS and will not be defective. Prompt notice of all defects shall be given to CONTRACTOR. All defective Work, whether or not in place, may be rejected, corrected or accepted as provided in this Article 13.

ACCESS TO WORK:

13.2. ENGINEER and ENGINEER'S representatives, other representatives of OWNER, testing agencies an governmental agencies with jurisdictional interests will have access to the work at reasonable times for their observation, inspecting and testing. CONTRACTOR shall provide proper and safe conditions for such access.

TESTS AND INSPECTION:

13.3. CONTRACTOR shall give ENGINEER timely notice of readiness of the Work for all required inspections, tests or approvals.

13.4. If laws and Regulations of any public body having jurisdiction require any Work (or part thereof) to specifically be inspected, tested or approved, CONTRACTOR shall assume full responsibility therefore, pay all costs in connection therewith and furnish ENGINEER the required certificates of inspection, testing or approval.

CONTRACTOR shall also be responsible for and shall pay all costs in connection with any inspection or testing required in connection with OWNER'S or ENGINEER'S acceptance of a supplier or materials or equipment proposed to be incorporated in the Work, or of materials or equipment submitted for approval prior to CONTRACTOR'S purchase thereof for incorporation in the Work. The cost of all inspections, tests and approvals other than those which are required by the CONTRACT DOCUMENTS shall be paid by OWNER (unless otherwise specified).

13.5. All inspections, tests or approvals other than those required by Laws or regulations of any public body having jurisdiction shall be performed by organizations acceptable to OWNER and CONTRACTOR (or by ENGINEER if so specified).

13.6. If any Work (including the work of others) that is to be inspected, tested or approved is covered without written concurrence of ENGINEER, it must, if requested by ENGINEER, be uncovered for observation. Such uncovering shall be at CONTRACTOR'S expense unless CONTRACTOR has given ENGINEER timely notice of CONTRACTOR'S intention to cover the same and ENGINEER has not acted with reasonable promptness in response to such notice.

13.7. Neither observations by ENGINEER nor inspections, tests or approvals by others shall relieve CONTRACTOR from CONTRACTOR'S obligations to perform the Work in accordance with the CONTRACT DOCUMENTS.

UNCOVERING WORK:

13.8. If any Work is covered contrary to the written request of ENGINEER, it must, if requested by ENGINEER, be uncovered for ENGINEER'S observation and replaced at CONTRACTOR'S EXPENSE.

13.9. If ENGINEER considers it necessary or advisable that covered Work be observed by ENGINEER or inspected or tested by others, CONTRACTOR, a ENGINEER'S request, shall uncover, expose or otherwise make available for observation, inspection or testing as ENGINEER may require, that portion of the Work in question, furnishing all necessary labor, material and equipment. If it is found that such Work is defective, CONTRACTOR shall bear all direct, indirect and consequential costs of such uncovering, exposure, observation, inspection and testing and of satisfactory reconstruction, (including but not limited to fees and charges of engineers, architects, attorneys and other professionals), and OWNER shall be entitled to an appropriate decrease in the Contract Price, and, if the parties are unable to agree as to the amount thereof, may make a claim thereof, may make a claim therefore as provided in Article 11. If, however, such work is not found to be defective, CONTRACTOR shall be allowed to increase in the Contract Price or an extension of the contract time, or both, directly attributable to

such uncovering, exposure, observation, inspection, testing and reconstruction; and, if the parties are unable to agree as to the amount or extent thereof, CONTRACTOR may make a claim therefore as provided in Articles 11 and 12.

OWNER MAY STOP THE WORK:

13.10. If the Work is defective, or CONTRACTOR fails to supply sufficient skilled workers or suitable materials or equipment, or fails to furnish or perform the Work in such a way that the completed Work will conform to the CONTRACT DOCUMENTS, OWNER may order CONTRACTOR to stop the Work, or any portion thereof, until the cause for such order has been eliminated; however, this right of OWNER to stop the Work shall not give rise to any duty on the part of OWNER to exercise this rights for the benefit of CONTRACTOR or any other party.

CORRECTION OR REMOVAL OF DEFECTIVE WORK:

13.11. If required by ENGINEER, CONTRACTOR shall promptly, as directed, either correct al defective Work, whether or not fabricated, installed or completed, or, if the Work has been rejected by Engineer, remove it from the site and replace it with non-defective Work. CONTRACTOR shall bear all direct, indirect and consequential costs of such correction or removal (including but not limited to fees and charges of engineers, architects, attorneys and other professionals) made necessary thereby.

ONE-YEAR CORRECTION PERIOD:

13.12. If within one year after the date of issue of the Certificate of Acceptance or such longer period of time as may be prescribed by Laws or Regulations or by the terms of any applicable special guarantee required by the CONTRACT DOCUMENTS or by any specific provision of the CONTRACT DOCUMENTS, any Work is found to be defective, CONTRACTOR shall promptly, without cost to OWNER and in accordance with OWNER'S written instructions, either correct such defective Work, or, if it has been rejected by OWNER, remove it from the site and replace it with non-defective work. If CONTRACTOR does not promptly comply with the terms of such instructions, or in an emergency where delay would cause serious risk of loss or damage, OWNER may have the defective Work corrected pr the rejected work removed and replaced, and all direct, indirect and consequential costs and replacement (including but not limited to fees and charges of engineers, architect, attorneys, and other professionals) will be paid by CONTRACTOR.

ACCEPTANCE OF DEFECTIVE WORK:

13.13. If, instead of requiring correction of removal and replacement of defective Work, OWNER (and, prior to ENGINEER'S recommendation of final payment, also ENGINEER) prefers to accept it, OWNER may do so. CONTRACTOR shall bear all direct, indirect and consequential costs attributable to OWNER's evaluation of and determination to accept such defective Work (such cost to be approved by ENGINEER as to reasonableness and to include but not be limited to fees and charges of engineers, architects, attorneys and other professionals).

If any such acceptance occurs prior to ENGINEER'S recommendation of final payment, a Change Order will be issued incorporating the necessary revisions in the CONTRACT DOCUMENTS with respect to the Work; and OWNER shall be entitled to an appropriate decrease in the Contract Price, and, if the parties are unable to agree as to the amount thereof, OWNER may make a claim therefore as provided in Article 11. If the acceptance occurs after such recommendation, an appropriate amount will be paid by CONTRACTOR to OWNER.

OWNER MAY CORRECT DEFECTIVE WORK:

13.14. If COCNTRACTOR fails within a reasonable time after written notice of ENGINEER to proceed to correct and to correct defective Work or to remove and replace rejected Work as required by ENGINEER in accordance with paragraph 13.11, or if CONTRACTOR fails to perform the Work in accordance with the CONTRACT DOCUMENTS, or if CONTRACTOR fails to comply with any other provision of the CONTRACT DOCUMENTS, OWNER may, after seven days' written notice to CONTRACTOR, correct and remedy any such deficiency. In exercising the rights and remedies under this paragraph OWNER shall proceed expeditiously. To the extent necessary to complete corrective and remedial action, OWNER may exclude CONTRACTOR from all or part of the site, take possession of all or part of the Work, and suspend CONTRACTOR'S services related thereto, take possession of CONTRACTOR'S tools, appliances, construction equipment and machinery at the site and incorporate in the Work all materials and equipment stored at the site or for which OWNER has paid CONTRACTOR but which are stored elsewhere. CONTRACTOR shall allow OWNER, OWNER'S representatives, agents and employees such access to the site as may be necessary to enable OWNER to exercise the rights and remedies under this paragraph. All direct, indirect and consequential costs of OWNER in Exercising such rights and remedies will be charged against CONTRACTOR in an amount approved as to reasonableness by ENGINEER, and charged against CONTRACTOR in an amount approved as to reasonableness by ENGINEER, and a Change Order will be issued incorporating the necessary revisions in the CONTRACT DOCUMENTS with respect to the Work; and OWNER shall be entitled to an appropriate decrease in the Contract Price, and, if the parties are unable to agree as to the amount thereof, OWNER may make a claim therefore as provided in Article 11. Such direct, indirect and OWNER consequential costs will include but not be limited to fees and charges of engineers, architects, and other professionals, all court and arbitration costs and all costs of repair and replacement of work of others destroyed or damaged by correction, removal or replacement of CONTRACTOR'S defective Work. CONTRACTOR shall not be allowed an extension of the Contract Time because of any delay in performance of the Work attributable to the exercise by OWNER of OWNER'S rights and remedies hereunder.
ARTICLE 14 - PAYMENTS TO CONTRACTOR AND COMPLETION SCHEDULE OF VALUES:
14.1 The schedule of values established as provided in paragraph 2.9 will serve as the basis for progress payments and will be incorporated into a form of Application of Payment acceptable to ENGINEER. Progress payments on account of Unit Price Work will be based on the number of units completed.

APPLICATION FOR PROGRESS PAYMENT:

14.2 At least twenty days before each progress payment is scheduled (but not more often than once a month), CONTRACTOR shall submit to ENGINEER for review an Application for Payment filled out and signed by CONTRACTOR covering the Work completed as of the date of the Application and accompanied by such supporting documentation as is required by the CONTRACT DOCUMENTS. If Payment is requested on the basis of materials and equipment not incorporated in the Work but delivered and suitably stored at the site or at another location agreed to in writing, the Application for Payment shall also be accompanied by a bill of sale, invoice or other documentation warranting that OWNER has received the materials and equipment free and clear of all liens, charges, security interests and encumbrances (which are hereinafter in these General Conditions referred to as "Liens") and evidence that the materials and equipment are covered by appropriate property insurance and other arrangements to protect OWNER'S interest therein, all of which will be satisfactory to OWNER. The amount of retainage with respect to progress payments will be 10% (ten percent). The retainage shall be held by the owner until all the work has been satisfactorily completed and accepted in writing. At that time the retainage may be released and included in the Final Payment.

CONTRACTOR'S WARRANTY OF TITLE:

14.3. CONTRACTOR warrants and guarantees that title to all Work, materials and equipment covered by any Application for Payment, whether incorporated in the Project or not, will pass to OWNER no later than the time of payment free and clear of all Liens.

REVIEW OF APPLICATIONS FOR PROGRESS PAYMENT:

14.4 ENGINEER will, within ten days after receipt of each Application for Payment, either indicate in writing a recommendation of payment and present the Application to Owner, or return the Application to Contractor indicating in writing ENGINEER'S reasons for refusing to recommend payment. In the latter case, CONTRACTOR may make the necessary corrections and re-submit the Application twenty (20) days after the presentation of the Application for Payment with ENGINEER'S recommendation, the amount recommended will (subject to the provisions of the last sentence of paragraph 14.7) become due and when due will be paid by OWNER to CONTRACTOR.

14.5 ENGINEER'S recommendation of any payment requested in an application for Payment will constitute a representation by ENGINEER to OWNER, based on ENGINEER'S on-site observations of the Work in progress as an experienced and qualified design professional and on ENGINEER'S review of the Application for Payment and the accompanying data and schedules that the work has progressed to the point indicated that to the best of the ENGINEER'S knowledge, information and belief, the quality of the Work is in accordance with the CONTRACT DOCUMENTS (subject to an evaluation of the Work as a functioning whole prior to or upon Substantial Completion, to the results of any subsequent test called for in the CONTRACT DOCUMENTS, to a final determination of quantities and classifications for Unit Price Work under paragraph 9.10, and to any other qualifications stated the recommendation); and that CONTRACTOR is entitled to payment of the amount recommended.

However, by recommending any such payment ENGINEER will not thereby be deemed to have represented that exhaustive or continuous on-site inspection have been made to check the quality or the quantity of the Work beyond the responsibilities specifically assigned to ENGINEER in the CONTRACT DOCUMENTS or that there may be other matters or issues between the parties that might entitle CONTRACTOR to be paid additionally by OWNER or OWNER to withhold payment to CONTRACTOR.

14.6 ENGINEER'S recommendation of final payment will constitute an additional representation by ENGINEER to OWNER that the conditions precedent to CONTRACTOR'S being entitled to final payment as set forth in paragraph 14.13 have been fulfilled.

14.7. ENGINEER may refuse to recommend the whole or any part of any payment if, in ENGINEER'S opinion, it would be incorrect to make such representation to OWNER. ENGINEER may also refuse to recommend any such payment, or because of tests, nullify any such payments previously recommended, to such extent as may be necessary in ENGINEER'S opinion to protect OWNER from loss because:

14.7.1 The Work is defective, or completed Work has been damaged requiring correction or replacement;

14.7.2. The Contract Price has been reduced by Written Amendment or Change Order,

14.7.3. OWNER has been required to correct defective Work or complete Work in accordance with paragraph 13.14.

14.7.4. ENGINEER'S actual knowledge of the occurrence of any of the events enumerated in paragraphs 15.2.1 through 15.2.9 inclusive.

OWNER may refuse to make payment of the full amount recommended by ENGINEER because claims have been made against OWNER on account of CONTRACTOR'S performance of furnishing of the Work or Liens have been filed in connection with the Work or there are other items entitling OWNER to a set-off against the amount recommended, but OWNER must give CONTRACTOR immediate written Notice (with a copy to ENGINEER) stating the reasons for such action.

SUBSTANTIAL COMPLETION:

14.8 When CONTRACTOR considers the entire Work ready for its intended use CONTRACTOR shall notify OWNER and ENGINEER in writing that the entire Work is substantially complete (except for items specifically listed by CONTRACTOR as incomplete) and request that ENGINEER issue a certificate of Substantial Completion. Within a reasonable time thereafter, OWNER, CONTRACTOR and ENGINEER shall make an inspection of the

Work to determine the status of completion. If ENGINEER considers The Work substantially complete, ENGINEER will prepare and deliver to OWNER a tentative certificate of Substantial Completion which shall fix the date of Substantial Completion.

There shall be attached to the certificate a tentative list of items to be completed or corrected before final payment. OWNER shall have seven days after receipt of the tentative certificate during which to make written objection to ENGINEER as to any provisions of the certificate or attached list. If, after considering such objections, ENGINEER concludes that the Work is not substantially complete, ENGINEER will within fourteen days after submission of the tentative certificate to OWNER notify CONTRACTOR in writing, stating the reasons therefore. If, after consideration of OWNER'S objections, ENGINEER considers the Work substantially complete, ENGINEER will within said fourteen days execute and deliver to OWNER and CONTRACTOR a definitive certificate of Substantial Completion (with a revised tentative list of items to be completed or corrected) reflecting such changes from the tentative certificate as ENGINEER believes justified after consideration of any objections from OWNER. At the time of delivery of the tentative certificate of Substantial completion (with a revised tentative list of items to be completed or corrected) reflecting such changes from the tentative certificate as ENGINEER of delivery of the tentative certificate of Substantial Completion ENGINEER will deliver to OWNER and CONTRACTOR a written recommendation as to division of responsibilities pending final payment between OWNER and CONTRACTOR with respect to security, operation, safety, maintenance, heat, utilities, insurance and warranties. Unless OWNER and CONTRACTOR agree otherwise in writing and to inform ENGINEER prior to ENGINEER'S issuing the definitive certificate of Substantial completion, ENGINEER'S aforesaid recommendation will be binding on OWNER and CONTRACTOR until final payment.

14.9. OWNER shall have the right to exclude CONTRACTOR from the Work after the date of Substantial Completion, but OWNER shall allow CONTRACTOR reasonable access to complete or correct items on the tentative list.

PARTIAL UTILIZATION:

14.10. Use by OWNER of any finished part of the Work, which has specifically been identified in the CONTRACT DOCUMENTS, or which OWNER, ENGINEER and CONTRACTOR agree constitutes a separately functioning and usable part of the Work that can be used by OWNER without significant interference with CONTRACTOR'S performance of the remainder of the Work, may be accomplished prior to Substantial Completion of all the Work subject to the following:

14.10.1. OWNER at any time may request CONTRACTOR in writing to permit OWNER to use any such part of the Work which OWNER believes to be ready for its intended use and substantially complete. If CONTRACTOR agrees, CONTRACTOR will certify to OWNER and ENGINEER that said part of the Work is substantially complete and request ENGINEER to issue a certificate of Substantial Completion for that part of the Work. CONTRACTOR at any time may notify OWNER and ENGINEER in writing that CONTRACTOR considers any such part of

the Work ready for its intended use and substantially complete and request ENGINEER to issue a certificate of Substantial Completion for that part of the Work. Within a reasonable time after either such request, OWNER, CONTRACTOR and ENGINEER shall make an inspection of that part of the Work to determine its status of completion. If ENGINEER does not consider that part of the Work to be substantially complete, the provisions of paragraphs 14.8 and 14.9 will apply with respect to certification of Substantial Completion of that part of the Work and the division of responsibility in respect thereof and access thereto.

14.10.2 OWNER at any time may request CONTRACTOR in writing to permit OWNER to take over operation of any such part of the Work although it is not substantially complete. A copy of such request will be sent to ENGINEER and within a reasonable time thereafter OWNER, CONTRACTOR and ENGINEER shall make an inspection of that part of the Work to determine its status of completion and will prepare a list of the items remaining to be completed or corrected thereon before final payment. If CONTRACTOR does not object in writing to OWNER and ENGINEER that such part of the Work is not ready for separate operation by OWNER, ENGINEER will finalize the list of items to be completed or corrected and will deliver such list to OWNER and CONTRACTOR together with written recommendation as to the division of responsibilities pending final payment between OWNER and CONTRACTOR with respect to security, operation, safety, maintenance, utilities, insurance, warranties and guarantees for that part of the Work which will become binding upon OWNER and CONTRACTOR at the time when OWNER takes over such operation (unless they shall have otherwise agreed in writing and so informed ENGINEER). During such operation and prior to Substantial Completion of such part of the Work, OWNER shall allow CONTRACTOR reasonable access to complete or correct items on said list and to complete other related Work.

14.10.3 No occupancy or separate operation of part of the Work will be accomplished prior to
compliance with the requirements of paragraph 5.15 in respect of property insurance. FINAL INSPECTION:

14.11 Upon written notice from CONTRACTOR that the entire Work or an agreed portion thereof is complete, ENGINEER will make a final inspection with OWNER and CONTRACTOR and will notify CONTRACTOR in writing of all particulars in which this inspection reveals that the Work is incomplete or defective. CONTRACTOR shall immediately take such measures as are necessary to remedy such deficiencies.

FINAL APPLICATION FOR PAYMENT:

14.12 After CONTRACTOR has completed all such corrections to the satisfaction of ENGINEER and delivered all maintenance and operating instructions, schedules, guarantees, Bonds certificates of inspection, marked-up record documents (as provided in paragraph 6.19) and other documents-all as required by the CONTRACT DOCUMENTS, and after ENGINEER has indicated that the Work is acceptable (subject to the provisions of paragraph 14.16), CONTRACTOR may make application for final payment following the procedure for progress payments. The final Application for Payment shall be accompanied by all documentation called for in the CONTRACT DOCUMENTS, together with complete and legally effective releases or

waivers (satisfactory to OWNER) of all Liens arising out of or filed in connection with the Work. In lieu thereof and as approved by OWNER, CONTRACTOR may furnish receipts or releases in full; an affidavit of CONTRACTOR that the releases and receipts include all labor, services, material and equipment for which a Lien could be filed, and that all payrolls, material and equipment bills, and other indebtedness connected with the Work for which OWNER or OWNER'S property might in any way be responsible, have been paid or otherwise satisfied; and consent of the surety, if any, to final payment. If any Sub-Contractor or Supplier fails to furnish a release or receipt in full, CONTRACTOR may furnish a Bond or other collateral satisfactory to OWNER to indemnify OWNER against any Lien.

FINAL PAYMENT AND ACCEPTANCE:

If, on the basis of ENGINEER'S observation of the Work during construction and final inspection, and ENGINEER'S review of the final Application for Payment and accompanying documentation, all required by the CONTRACT DOCUMENTS, ENGINEER is satisfied that the Work has been completed and CONTRACTOR'S other obligations under the CONTRACT DOCUMENTS have been fulfilled, ENGINEER will, within ten days after receipt of final Application for Payment, indicate in writing ENGINEER'S recommendation of payment and present the Application to OWNER for payment.

Thereupon ENGINEER will give written notice to OWNER and CONTRACTOR that the Work is acceptable subject to the provisions of paragraph 14.16. otherwise, the ENGINEER will return the Application to CONTRACTOR, indicating in writing the reasons for refusing to recommend final payment, in which case CONTRACTOR shall make the necessary corrections and re-submit the Application. Thirty days after presentation to OWNER of the Application and accompanying documentation, in appropriate form and substance, and with ENGINEER'S recommendation and notice of acceptability the amount recommended by ENGINEER will become due and will be paid by OWNER to CONTRACTOR.

14.14 If, through no fault of CONTRACTOR, final completion of the Work is significantly delayed and if ENGINEER so confirms, OWNER shall, upon receipt of CONTRACTOR'S final Application for payment and recommendation of ENGINEER, and without terminating the Agreement, make payment of the balance due for that portion of the Work fully completed and accepted. If the remaining balance to be held by OWNER for Work not fully completed or corrected is less than the retainage stipulated in the Agreement, and if bonds have been furnished as required in paragraph 5.1, the written consent of the surety to the payment of the balance due for that portion of the Work fully completed and accepted shall be submitted by CONTRACTOR to ENGINEER with the Application for such payment. Such payment shall be made under the terms and conditions governing final payment, except that it shall not constitute a waiver of claims.

CONTRACTOR'S CONTINUING OBLIGATION:

14.15. CONTRACTOR'S obligation to perform and complete the Work in accordance with the CONTRACT DOCUMENTS shall be absolute. Neither recommendation of any progress or final

payment by ENGINEER, nor the issuance of a certificate of Substantial Completion, nor any payment by OWNER to CONTRACTOR under the CONTRACT DOCUMENTS, nor any use or occupancy of the Work or any part thereof by OWNER, nor any act of acceptance by OWNER nor any failure to do so, nor any review and approval of a Shop Drawing or sample submission, nor the issuance of a notice of acceptability by ENGINEER pursuant to paragraph 14.13, nor any correction of defective Work by OWNER will constitute an acceptance of Work not in accordance with the CONTRACT DOCUMENTS or release of CONTRACTOR'S obligation to perform the Work in accordance with the CONTRACT DOCUMENTS.

WAIVER OF CLAIMS:

14.16. The making and acceptance of final payment will constitute:

14.16.1 A waiver of all claims by OWNER against CONTRACTOR, except claims arising from unsettled Liens, from defective Work appearing after final inspection pursuant to paragraph 14.11 or from failure to comply with the CONTRACT DOCUMENTS or the terms of any special guarantees specified therein; however it will constitute a waiver by OWNER of any rights in respect of CONTRACTOR'S continuing obligations under the CONTRACT DOCUMENTS; and

14.16.2 A waiver of all claims by CONTRACTOR against OWNER other than those previously made in writing and still unsettled.

ARTICLE 15- SUSPENSION OF WORK AND TERMINATION OWNER MAY SUSPEND WORK:

15.1 OWNER may at any time and without cause, suspend the Work or any portion thereof for a period of not more than ninety days by notice in writing to CONTRACTOR and ENGINEER which will fix the date on which Work will be resumed. CONTRACTOR shall resume Work on the date so fixed. CONTRACTOR shall be allowed an increase in the Contract Price or an extension of the Contract Time, or both, directly attributable to any suspension if CONTRACTOR makes an approved claim therefore as provided in Articles 11 and 12.

OWNER MAY TERMINATE:

15.2 Upon the occurrence of any one or more of the following events:

15.2.1. If CONTRACTOR commences a voluntary case under any chapter of the Bankruptcy Code as now or hereafter in effect at the time of filling, or if a petition is filed seeking any such equivalent or similar relief against CONTRACTOR under any other Federal or State law in effect at the time relating to bankruptcy or insolvency;

15.2.2. If a petition is filed against CONTRACTOR under any chapter of the Bankruptcy Code as now or hereafter in effect at the time of filing, or if a petition is filed seeking any such equivalent or similar relief against CONTRACTOR under any other Federal or State law in

effect at the time relating to bankruptcy or insolvency;

15.2.3. If CONTRACTOR makes a general assignment for the benefit of creditors;

15.2.4. If a trustee, receiver, custodian or agent of CONTRACTOR is appointed under applicable law or under contract, whose appointment or authority to take charge of property of CONTRACTOR is for the purpose or enforcing a Lien against such property or for the purpose of general administration of such property for the benefit of CONTRACTOR'S creditors;

15.2.5. If CONTRACTOR admits in writing as inability to pay its debts generally as they become due;

15.2.6. If CONTRACTOR persistently fails to perform the work in accordance with the CONTRACT DOCUMENTS (including, but not limited to, failure to supply sufficient skilled workers or suitable materials or equipment of failure to supply sufficient skilled workers or suitable materials or equipment of failure to adhere to the progress schedule established under paragraph 2.9 as revised from time to time);

15.2.7. If CONTRACTOR disregards Law or Regulations of any public body having jurisdiction;

15.2.8. If CONTRACTOR disregards the authority of ENGINEER; or

15.2.9. If CONTRACTOR otherwise violates in any substantial way any provisions of the CONTRACT DOCUMENTS; OWNER (and the surety, if there be one) seven days written the extent notice and to permitted by Laws and Regulations, terminate the CONTRACTOR, exclude CONTRACTOR from the site and take possession of the Work and of all CONTRACTOR'S tools, appliances, construction equipment and machinery at the site and use the same to the full extent they could be used by CONTRACTOR (without liability to CONTRACTOR for trespass or conversion) incorporated in the Work all materials and equipment stored elsewhere and finish the Work as Owner may deem expedient. In such case CONTRACTOR shall not be entitled to receive any further payment until the Work is finished. If the unpaid balance of the Contract Price exceeds the direct, indirect and consequential costs of completing the Work (including but not limited to fees and charges of engineers, architects, attorneys and other professionals and court and arbitration costs), such excess will be paid to CONTRACTOR. If such costs exceed such unpaid balance, CONTRACTOR shall pay the difference to OWNER. Such costs incurred by OWNER will be approved as to reasonableness by ENGINEER and incorporated in a Change Order, but when exercising any rights to remedies under this paragraph OWNER shall not be required to obtain the lowest price for the Work performed.

15.3 Where CONTRACTOR'S services have been so terminated by OWNER, the termination will not affect any rights or remedies of OWNER against CONTRACTOR then existing or which may thereafter occur. Any retention or payment of moneys due CONTRACTOR by OWNER will not release CONTRACTOR from liability.

15.4. Upon seven days' written notice to CONTRACTOR and ENGINEER, OWNER may, without cause and without prejudice to any other right or remedy, elect to abandon the Work and terminate the Agreement. In such case, CONTRACTOR shall be paid for all Work executed and any expense sustained plus reasonable termination expense, which will include, but not be limited to, direct, indirect and consequential costs (including, but not limited to, fees and charges of engineers, architects, attorneys and other professionals and court and arbitration costs.

CONTRACTOR MAY STOP WORK OR TERMINATE:

15.5. If, through no act or fault of CONTRACTOR, the Work is suspended for a period or more than ninety days by OWNER or under an order of court or other public authority, or ENGINEER fails to act on any Application for Payment within thirty days after it is submitted, or OWNER fails for thirty days to pay CONTRACTOR any sum finally determined to be due, then CONTRACTOR may, upon seven days written notice to OWNER and ENGINEER, terminate the Agreement and recover from OWNER payment for all Work executed and any expense sustained plus reasonable termination expenses. In addition and in lieu of terminating the Agreement, if ENGINEER has failed to act on an Application for Payment or OWNER has failed to make any payment as aforesaid, CONTRACTOR may upon seven days' written notice to OWNER and ENGINEER stop the Work until payment of all amounts then due. The provisions of this paragraph shall not relieve CONTRACTOR of the obligations under paragraph 6.29 to carry on the Work in accordance with the progress schedule and without delay during disputes and disagreements with OWNER.

ARTICLE 16 - ARBITRATION
Deleted

ARTICLE 17 - MISCELLANEOUS GIVING NOTICE:
17.1 Whenever any provision of the CONTRACT DOCUMENTS requires the giving of written notice, it will be deemed to have been validly given if delivered in person to the individual or to a member of the firm or to an officer of the corporation for whom it is intended, or if delivered at or sent by registered or certified mail, postage prepaid, to the last business address know to the giver of the notice.

17.2.1. When any period of time is referred to in the CONTRACT DOCUMENTS by days, it will be computed to exclude the first and include the last day of such period. If the last day of any such period falls on a Saturday or on a day made a legal holiday by the law of the applicable jurisdiction, such day will be omitted from the computation.

17.2.2. A calendar day of twenty-four hours measured from midnight to the next midnight shall constitute a day.

GENERAL:

17.3. Should OWNER or CONTRACTOR suffer injury or damage to person or property because of any error, omission or act of the other party or of any of the other party's employees

or agents or others for whose acts the other party is legally liable, claim will be made in writing to the other party within a reasonable time of the first observance of such injury or damage. The provision of this paragraph 17.3 shall not be construed as a substitute for or a waiver of the provisions of any applicable statute of limitations or repose.

17.4. The duties and obligations imposed by these General Conditions and the rights and remedies available hereunder to the parties hereto, and, in particular but without limitation, the warranties, guarantees and obligation imposed upon CONTRACTOR by paragraphs 6.30, 13.1, 13.12, 13.14, 14.3 and 15.2 and all of the rights and remedies available to OWNER and ENGINEER thereunder, are in addition to, and are not to be construed in any way as a limitation of, any rights and remedies available to any or all of them which are otherwise imposed or available by Laws and Regulations, by special warranty or guarantee or by other provisions of the CONTRACT DOCUMENTS, and the provisions of this paragraph will be as effective as if repeated specifically in the CONTRACT DOCUMENTS in connection with each particular duty, obligation, right and remedy to which they apply. All representations, warranties and guarantees made in the CONTRACT DOCUMENTS will survive final payment and termination or completion of the Agreement.

17.5 STANDARD WORK HOURS: The standard work hours for the OWNER is 8:00 am to 5:00 pm, Monday through Friday. Should the Contractor elect to work on Saturday, Sundays or holidays, he shall be responsible for paying overtime charges for the OWNERS personnel involved. These charges will be at cost and will be calculated either at time and a half or double time, as applicable to the particular day being worked. Pre-approval shall be obtained from the Engineer or Engineer's representative by completing and signing a OWNER'S Form entitled "CONSTRUCTION INSPECTORS OVERTIME COMPENSATION AUTHORIZATION", prior to commencing any overtime work.

Any work done outside the standard workday, without prior authorization, shall be considered under unauthorized work. The Contractor is required to pay the overtime wages of the OWNER Inspectors that work overtime Mondays through Fridays at time in a half. The Contractor is responsible for the overtime wages of the ONWER inspectors that work Holidays at double time. Minimum hours will be billed to contractor for callouts or for insufficient notice of two (2) hours.

17.6 INDEMNIFICATION

TO THE FULLEST EXTENT PERMITTED BY APPLICABLE LAWS AND REGULATIONS, CONTRACTOR SHALL INDEMNIFY AND HOLD HARMLESS OWNER, ENGINEER, ENGINEER'S SUBCONSULTANTS AND THE OFFICERS, DIRECTORS, EMPLOYEES, AGENTS, AND OTHER CONSULTANTS OF EACH AND ANY OF THEM FROM AND AGAINST ALL CLAIMS, COSTS, LOSSES, AND DAMAGES (INCLUDING BUT NOT LIMITED TO ALL FEES AND CHARGES OR ENGINEERS, ARCHITECTS, ATTORNEYS, AND OTHER PROFESSIONALS AND ALL COURT OR ARBITRATION OR OTHER DISPUTE RESOLUTION COSTS) CAUSED BY, ARISING OUT OF, OR RESULTING FROM, THE PERFORMANCE OF THE WORK, PROVIDED THAT ANY SUCH CLAIM, COST, LOSS OR DAMAGE: (i) IS ATTRIBUTABLE TO BODILY INJURY, SICKNESS,

DISEASE, OR DEATH, OR TO INJURY TO OR DESTRUCTION OF TANGIBLE PROPERTY (OTHER THAN THE WORK ITSELF), INCLUDING THE LOSS OF USE RESULTING THEREFROM, AND
(ii) IS CAUSED IN WHOLE OR IN PART BY ANY NEGLIGENT ACT OR OMISSION OF CONTRACTOR, ANY SUBCONTRACTOR, ANY SUPPLIER, ANY PERSON, OR ORGANIZATION DIRECTLY OR INDIRECTLY EMPLOYED BY ANY OF THEM TO PERFORM OR FURNISH ANY OF THE WORK, OR ANYONE FOR WHOSE ACTS ANY OF THEM MAY BE LIABLE, REGARDLESS OF WHETHER OR NOT CAUSED IN PART BY ANY NEGLIGENCE OR OMISSION OF A PERSON OR ENTITY INDEMNIFIED HEREUNDER OR WHETHER LIABILITY IS IMPOSED UPON SUCH INDEMNIFIED PARTY BY LAWS AND REGULATIONS REGARDLESS OF THE NEGLIGENCE OF ANY SUCH PERSON OR ENTITY. CLAIMS, COSTS, LOSSES, DAMAGES, SUITS AND CAUSES OF ACTION, AND ANY AND ALL LIABILITY, COSTS, EXPENSES, SETTLEMENTS, DAMAGES, AND JUDGEMENTS INCURRED IN CONNECTION THEREWITH (INCLUDING BUT NOT LIMITED TO ALL FEES AND CHARGES OF ENGINEERS, ARCHITECTS, ATTORNEYS, AND OTHER PROFESSIONALS, AND ALL COURT OR ARBITRATION OR OTHER DISPUTES RESOLUTION COSTS) WHETHER ARISING IN EQUITY, AT COMMON LAW, OR BY STATUTE, INCLUDING THE TEXAS DECEPTIVE TRADE PRACTICES ACTOR SIMILAR STATUTE OF OTHER JURISDICTIONS, OR UNDER THE LAW OF CONTRACTS, TORTS (INCLUDING WITHOUT LIMITATION, NEGLIGENCE AND STRICT LIABILITY WITHOUT REGARD TO FAULT) OR PROPERTY, OF EVERY KIND OR CHARACTER… (iii) IS CAUSED IN WHOLE OR IN PART BY ANY NEGLIGENT ACT OR OMISSION, OTHER FAULT, BREACH OF CONTRACT OR WARRANTY, VIOLATION OF THE TEXAS DECEPTIVE TRADE PRACTICES ACT, OR STRICT LIABILITY WITHOUT REGARD TO FAULT OF CONTRACTOR…. REGARDLESS OF WHETHER OR NOT CAUSED IN PART BY ANY NEGLIGENCE OR OMISSION, OTHER FAULT, BREACH OF CONTRACT OR WARRANTY, VIOLATION OF THE TEXAS DECEPTIVE TRADE PRACTICES ACT, OR STRICT LIABILITY WITHOUT REGARD TO FAULT OF A PERSON OR ENTITY INDEMNIFIED HEREUNDER…. CONTRACTOR'S OBLIGATIONS OF INDEMNIFICATION UNDER THIS PARAGRAPH 6.20.1 SHALL NOT BE LIMITED BY THE AMOUNT OF ANY INSURANCE.

VIDEOTAPING: The Contractor shall videotape the entire job site, including access to the job site, prior to commencing work. A copy of the videotape shall be provided to the City at the Pre-Construction Conference. The videotape will be held for historical purposes and for resolving complaints/claims from affected property owners. Failure to provide such a tape shall render the contractor liable for claims. Acceptable format is standard VHS tape. Beta format is not acceptable.

Monthly videotaping by the contractor during construction is recommended to protect the contractor's interest against claims and as a basis for extras.

Exhibit I

SPECIAL CONDITIONS

1. COMPLETION TIME AND LIQUIDATED DAMAGES

The project as indicated in the Plans and Specifications shall be completed within the number of consecutive calendar days stated in the Contract beginning the date of the notice to commence work. Contractors shall submit a monthly request for time extensions, and such requests shall include justification in conformance with the Contract. The time set forth in the Proposal for the completion of the work is an essential element of the contract. The Contractor and Owner understand and agree that a breach of this Contract as to completion on time will cause damage to the Owner. The parties agree that for each and every calendar day the work or an portion thereof shall remain uncompleted after the expiration of the time limits, the amount per day given in the following schedule will be deducted from the money due or to become due the Contractor, not as penalty, but as liquidated damages and added expense of engineering and overhead.

The Contractor shall within the (10) days from the beginning of any delay notify the Engineer, in writing, of the causes of delay. The Engineer shall ascertain the facts, and the extent of delay and his findings of the facts thereon shall be final and conclusive.

2. CONTRACT DRAWINGS

The Contractor will be furnished three (3) complete sets of drawings by the Engineer for use during construction of the project. Only Plans and Specifications marked "Approved for Construction" and bearing signature of the Engineer on said mark shall be used as construction drawings. Any additional set of construction plans can be provided to contractor upon payment of $100.00.

3. DISPOSAL OF RUBBISH

It shall be the responsibility of the Contractor to dispose of all rubbish, brush, fencing, trees or other objectionable materials by burning, removal form the site or whatever means necessary to effect such disposal.

4. UTILITY SERVICES FOR CONSTRUCTION

Contractor will be responsible for furnishing water or any other utility services required for construction of project.

5. TESTING, INSPECTION AND CONTROL

Testing and inspection of materials required by these specifications shall be by a commercial testing laboratory. The laboratory shall be selected by the Owner and laboratory services and field testing required by the Technical Specifications for control of work, such as testing of concrete cylinders made on the job shall be paid for by the Contractor. Additional laboratory services as dictated below shall be paid for y the Contractor:

A. The cost of laboratory services required to establish mix design for Portland Cement Concrete and Asphaltic concrete mixture, testing of aggregates, fixing gradations, the preparations and testing of design cylinders or specimens and other such services required to establish mix design, or to redesign the mix when required due to change in source of materials.

B. The Contractor shall furnish all materials and test specifications for testing as selected by the Testing Agency.

C. Mills test will be required for reinforcing steel, and cement, and mill certificates will be acceptable when it is definite that the test sheets apply to the material being supplied.

D. Any tests or inspections performed exclusively for the Contractor's convenience and for retests caused by initial nonconformance of the materials with the Contract Documents.

The testing mentioned in this section will be performed at a frequency required by the specification or at a frequency determined by the Engineer or the Engineer's representative. The Engineer shall require sufficient testing to ensure that the requirements of the specifications are met by the Contractor.

6. LICENSE, FEES AND PERMITS

It shall be the Contractor's responsibility to make necessary applications and obtain all permits required by all agencies, including, but not limited to, the City, County, State, and Federal government for this project.

7. TRAFFIC

It shall be the responsibility of the Contractor to provide for the safety and convenience of traffic so as to comply with all existing traffic regulations and ordinances as may apply.

8. UNDERGROUND OBSTACLES

Pipelines and other existing underground installations and structures in the vicinity of the work are shown on the drawings according o the best information available to the Owner. The Owner does not guarantee the accuracy of such information. The Contractor shall make every effort to locate all underground pipelines, conduits and structures by contacting owners of underground utilities an by prospecting in advance of trench excavation. The repair of existing utilities cut by

the Contractor shall be made at the expense of the Contractor, and shall be scheduled so as to cause the least possible inconvenience to the public. Any delay or extra cost to the Contractor caused by pipelines or other underground structures or obstructions not shown by the Plans, or found in location of different from those indicated, shall not constitute a claim for extra work, additional payment or damages.

9. RECORD DRAWINGS

Upon completion of the project and before final payment is made to the Contractor, the Contractor shall deliver one (1) complete set of record drawings and said drawings shall be neat, accurate and orderly and produced to the satisfaction of the Engineer.

10. OTHER CONTRACTS

Other contracts may be underway concurrently in this area. Contractor shall afford other contractors and utility companies reasonable opportunity for the introduction and storage of their materials and the execution of their work and shall properly connect and coordinate his work with theirs.

11. MATERIALS AND WORKSHIP

When materials are specified by a trade or brand name, it is not the intention of the Owner to discriminate against an equal product of another manufacturer, but to set a definite standard of quality or performance and to establish an equal basis for the evaluation of bids.

12. REPAIR TO ROADS

The Contractor shall be responsible for repairing any damage to City or County Roads and road owned by the Owner which are used by the Contractor in connection with operations under this Contract. Said repair work shall be at the Contractor's expense. Any debris, mud and related sources caused by contractor will need to be hauled off and cleaned.

13. PUBLIC UTILITIES

A. All poles, wires, cables, conduits, pipelines, or other structures within the work area, belonging to municipalities or public utility corporations, shall be protected by the Contractor.
B. The Contractor will conduct the work along any section of this project which is crossed by, or adjacent to, a public utility such as high lines, sewer lines, etc., in a manner so that no damages result to these utilities. The Contractor will be held solely responsible for damages to such utilities as a result of careless or negligent operations.

14. PRE-CONSTRUCTION CONFERENCE

Upon award of a Contract to the successful bidder, the Contractor shall meet with the Engineer at

a designated location and at a time set by the Engineer. A schedule of procedure for a sequence of construction shall be agreed upon at this conference.

15. LINES AND GRADES

Special attention is directed to Part 2, Paragraph 2.6, Page GC-5, of the General Conditions of Agreement. Special care should be taken by the Contractor to avoid disturbance of Engineer's horizontal and vertical control points. The protection of construction stakes (horizontal and vertical control points), is the Contractor's responsibility and re-staking or re-establishment of these points or stakes will be done by the Engineer at the Contractor's expense. Survey Party time for re-staking will be charged at hourly rates in accordance with the Engineer's schedule of hourly rates which is in effect at the time of the re-staking. (Refer to SG5 Notification)

16. STAKING FOR CONSTRUCTION General

The staking services that the Engineer will furnish and the responsibility of the Contractor respecting the uses of and maintenance of all stakes is outlined under this section. (Refer to Notification section on this document)

No stakes will be furnished until the right-of-way or easements are acceptable condition other than clearing stakes.

Notification

The Contractor shall notify the Engineer, in writing, at least three (3) full working days in advance of the date when specific staking services are desired, giving the specific location and/or limiting stations. The Contractor shall notify the Engineer five (5) days prior to start-up so as to allow the Engineer to set his control. The Engineer shall be notified of any change of sequence which is established at pre-construction conferences. Construction stakeout is the Contractor's responsibility. (non-pay item).

Control Stakes

Stakes which constitute reference points for all construction work will be conspicuously marked with flagging tape in accordance with the code in these Specifications. It will be the responsibility of the Contractor to inform his employees and his subcontractors of their importance, and the necessity for their preservation. The cost of replacing such controls, should it become necessary for any reason whatsoever, shall be at the Contractor's expense. If the removal of a control stake is required by the construction operations of the Contractor or his subcontractors, advance notice in writing, of at least three (3) full working days shall be given to the Engineer, who will reference and remove said stake or stakes at no cost to the Contractor.

The Contractor shall employ competent grade setters to control the grading operations from the

information provided on the reference stakes.

No additional stakes will be furnished, except as requested in writing by the Contractor and paid for by him. This applies to all re-staking for whatever reason, as well as for additional staking which the Contractor may request. Charges for the additional staking will be deducted from next progress payment that is issued to the Owner by the Engineer.

17. INSURANCE REQUIREMENTS

The Contractor, at his expense, shall take out and keep in force throughout the term of this Contract, the following insurance coverage in the amounts specified below to cover all of his operations in connection with the work to be performed under the Technical Specifications. The insurance certificates shall be submitted to the Owner for acceptance prior to move-in and beginning work

MINIMUM INSURANCE REQUIRMENTS

INSURANCE TYPE
Workman's Compensation General Liability
Comprehensive Form
Premises-Operations Products/Completed Operations Hazard Contractual Insurance Independent Contractors Personal Injury

Automobile Liability Comprehensive Owned
Hired
Non-owned

Excess Liability
Umbrella Form

LIMITS OF LIABILITY

As provided by Texas Workman's Compensation Act.

Bodily Injury
$300,000/Person
$500,000/Occurance Property Damage
$100,000/Occurance

$300,00/Aggregate Personal Injury
$500,000

Bodily Injury
$300,000/Person
$500,000/Occurance Property Damage
$300,000/Occurance

$100,000

The remaining term of all policies shall extend at least to the least to the completion date of this Contract; if the expiration date shall occur prior to final completion of all operations hereunder, Contractor shall, not less than fifteen (15) days prior to expiration date, furnish evidence of renewal of or extension of such insurance. All such evidence of insurance shall provide for ten (10) days prior notice to be given to Owner in the event of cancellations.

The Contractor agrees to indemnify and to hold the Owner and the Engineer harmless from and against any and all damages, claims, demands, suits, judgments and costs including attorney's fees and expenses for or on account of damage to property of any person, firm corporation, or Government agency, or death of or injury to any person or persons (including property and employees of the Owner, the Contractor, and employees of the Contractor) directly or indirectly arising out of, or caused by or in connection with the performance of or failure to perform any work provided for hereunder by the Contractor, his subcontractors, or their or the Contractor's agents, servants, or employees.
The Contractor will be held accountable for all insurance coverage's including those of sub-contractors, and provide that all the above mentioned policies will be with insurance carriers.

18. UNBALINCING OF BIDS AND USAGE OF SPECIAL ITEMS

The Contractor's attention is directed to the fact that unbalancing of unit bid prices for any reason shall be considered justification for rejection of the bid. The Contractor may not decrease these bid prices, however, he may increase the bid prices as he may see fit. In instances where subsurface seepage of water above trench bottom requires the drying up of trench bottom, the use of washed gravelor shell in trench bottom will be permitted.

19. ARBITRATION

Arbitration under this agreement shall be subject to the provisions of the Texas General Arbitration Act, Articles 224 to 238-6, V.A.C.S. To any extend that the provisions of Section 16 of the General Conditions are in conflict with or inconsistent with any provision of such Act, the provisions of such Act shall control. Both the Owner and Contractor shall concur on Arbitration as a method of settling any particular dispute.

20. PARTIAL PAYMENTS

Article 14.2 APPLICATION FOR PROGRESS PAYMENT (Standard General Conditions of the Construction Contract) is hereby supplemented with the following:
On or before the last Monday of each month, the CONTRACTOR shall prepare and submit to the Engineer for approval or modification a statement showing as completely as practicable the

total value of the work done by the Contractor up to and including the last day of the preceding month; said statement shall also include the value of all sound materials delivered on the site of the work that are to be fabricated into the work.
The OWNER shall then pay the CONTRACTOR on or before the 2nd Monday of the following month the total amount of the approved statement, less 10 percent of the amount thereof, which 10 percent shall be retained until final payment, and further less all previous payments and all further sums that may be retained by the OWNER under the terms of this Agreement. It is understood, however, that in case the whole work be near the completion and some unexpected and unusual delay occurs due to not fault or neglect on the part of the CONTRACTOR, the OWNER may-upon written recommendation of the ENGINEER- pay a reasonable and equitable portion of the retained percentage to the CONTRACTOR, or the CONTRACTOR at the OWNER'S option, may be relieved of the obligation to fully complete the work and, thereupon, the CONTRACTOR shall receive payment of the balance due him under the contract subject only to the conditions stated under "Final Payment".

ACORD®

CERTIFICATE OF LIABILITY INSURANCE

DATE (MM/DD/YYYY) 07/09/2026

THIS CERTIFICATE IS ISSUED AS A MATTER OF INFORMATION ONLY AND CONFERS NO RIGHTS UPON THE CERTIFICATE HOLDER. THIS CERTIFICATE DOES NOT AFFIRMATIVELY OR NEGATIVELY AMEND, EXTEND OR ALTER THE COVERAGE AFFORDED BY THE POLICIES BELOW. THIS CERTIFICATE OF INSURANCE DOES NOT CONSTITUTE A CONTRACT BETWEEN THE ISSUING INSURER(S), AUTHORIZED REPRESENTATIVE OR PRODUCER, AND THE CERTIFICATE HOLDER.

IMPORTANT: If the certificate holder is an ADDITIONAL INSURED, the policy(ies) must have ADDITIONAL INSURED provisions or be endorsed. If SUBROGATION IS WAIVED, subject to the terms and conditions of the policy, certain policies may require an endorsement. A statement on this certificate does not confer rights to the certificate holder in lieu of such endorsement(s).

PRODUCER Hughston Insurance Agency, Inc. PO Box 8550 Brownsville TX 78526	CONTACT NAME: Camille Atkinson PHONE (A/C, No, Ext): (956) 542-4387 FAX (A/C, No): (956) 542-8335 E-MAIL ADDRESS: camille@hiains.net
INSURED Ziwa Corporation 1952 S. Price Road Brownsville TX 78521 (956) 542-8167	INSURER(S) AFFORDING COVERAGE — NAIC # INSURER A: National Union Fire Ins. Compa — 19445 INSURER B: Travelers Property Casualty In — 36161 INSURER C: United Fire Lloyds — 43559 INSURER D: Underwriters at Lloyd, London INSURER E: INSURER F:

COVERAGES ME **CERTIFICATE NUMBER:** Cert ID 5069 (26) **REVISION NUMBER:**

THIS IS TO CERTIFY THAT THE POLICIES OF INSURANCE LISTED BELOW HAVE BEEN ISSUED TO THE INSURED NAMED ABOVE FOR THE POLICY PERIOD INDICATED. NOTWITHSTANDING ANY REQUIREMENT, TERM OR CONDITION OF ANY CONTRACT OR OTHER DOCUMENT WITH RESPECT TO WHICH THIS CERTIFICATE MAY BE ISSUED OR MAY PERTAIN, THE INSURANCE AFFORDED BY THE POLICIES DESCRIBED HEREIN IS SUBJECT TO ALL THE TERMS, EXCLUSIONS AND CONDITIONS OF SUCH POLICIES. LIMITS SHOWN MAY HAVE BEEN REDUCED BY PAID CLAIMS.

INSR LTR	TYPE OF INSURANCE	ADDL INSD	SUBR WVD	POLICY NUMBER	POLICY EFF (MM/DD/YYYY)	POLICY EXP (MM/DD/YYYY)	LIMITS	
A	X COMMERCIAL GENERAL LIABILITY CLAIMS-MADE X OCCUR GEN'L AGGREGATE LIMIT APPLIES PER: POLICY X PRO-JECT LOC OTHER:			4673961	09/01/2025	09/01/2026	EACH OCCURRENCE DAMAGE TO RENTED PREMISES (Ea occurrence) MED EXP (Any one person) PERSONAL & ADV INJURY GENERAL AGGREGATE PRODUCTS - COMP/OP AGG	$ 2,000,000 $ 300,000 $ 10,000 $ 2,000,000 $ 4,000,000 $ 4,000,000
A	AUTOMOBILE LIABILITY X ANY AUTO OWNED AUTOS ONLY HIRED AUTOS ONLY SCHEDULED AUTOS NON-OWNED AUTOS ONLY			3326255	09/01/2025	09/01/2026	COMBINED SINGLE LIMIT (Ea accident) BODILY INJURY (Per person) BODILY INJURY (Per accident) PROPERTY DAMAGE (Per accident)	$ 2,000,000 $ $ $
B	UMBRELLA LIAB X OCCUR X EXCESS LIAB CLAIMS-MADE DED X RETENTION $ 10,000			CUP-9R81942A-25-NF	09/01/2025	09/01/2026	EACH OCCURRENCE AGGREGATE Products-Comple	$ 5,000,000 $ 5,000,000 $ 5,000,000
A	WORKERS COMPENSATION AND EMPLOYERS' LIABILITY ANYPROPRIETOR/PARTNER/EXECUTIVE OFFICER/MEMBER EXCLUDED? (Mandatory in NH) Y/N: N — N/A If yes, describe under DESCRIPTION OF OPERATIONS below			WC 48407462	09/01/2025	09/01/2026	X PER STATUTE OTH-ER E.L. EACH ACCIDENT E.L. DISEASE - EA EMPLOYEE E.L. DISEASE - POLICY LIMIT	$ 1,000,000 $ 1,000,000 $ 1,000,000
D	Professional Liability			ANE4269704.25	09/13/2025	09/13/2026	Limit Each Claim/Aggregate	$ 1,000,000 $

DESCRIPTION OF OPERATIONS / LOCATIONS / VEHICLES (ACORD 101, Additional Remarks Schedule, may be attached if more space is required)
Project #: 196-26-ISD-RFP

CERTIFICATE HOLDER

City of Brownsville

1001 E. Elizabeth St.
P.O. Box 911
Brownsville TX 78520

CANCELLATION

SHOULD ANY OF THE ABOVE DESCRIBED POLICIES BE CANCELLED BEFORE THE EXPIRATION DATE THEREOF, NOTICE WILL BE DELIVERED IN ACCORDANCE WITH THE POLICY PROVISIONS.

AUTHORIZED REPRESENTATIVE

© 1988-2015 ACORD CORPORATION. All rights reserved.

Form 2 - Statement Of Conflicts Of Interest (If Any)

Conflict of Interest Disclosure Instructions

The Respondent vendor must describe any conflicts of interest related to the goods and/or services associated with this solicitation.

The Respondent shall complete and submit **Form CIQ (Form 2)** indicating any conflicts of interest for the service provider or key employees. If no conflicts exist, the Respondent must indicate "N/A" on the form and submit it as part of their response.

A conflict of interest statement is required if any conflicts exist, along with a detailed plan for mitigating the conflict(s).

The Entity reserves the sole discretion to determine whether a conflict disqualifies a firm and/or whether a conflict mitigation plan is acceptable.

Respondent Acknowledgment

By signing below, the Respondent certifies and acknowledges the following:

1. The Respondent has reviewed the requirements of Chapter 176, Texas Local Government Code, regarding conflict of interest disclosures.
2. The Respondent understands that a completed Texas Ethics Commission Form CIQ must be filed with the City Secretary's Office of the City of Brownsville, Texas, within seven (7) business days after the Respondent becomes aware of a conflict.
3. The Respondent acknowledges that the completed Form CIQ is a public record and will be made available by the City Secretary in accordance with state law.
4. The Respondent understands that failure to file a required Form CIQ is a violation of state law and may result in penalties under Texas Local Government Code §176.006 and possible disqualification from consideration for award.
5. The Respondent shall submit this acknowledgment form as part of its solicitation response and attach a copy of the completed TEC Form CIQ, if applicable.

City Secretary Contact Information

City of Brownsville – Office of the City Secretary
1001 East Elizabeth Street, Brownsville, Texas 78520
Email: citysecretary@brownsvilletx.gov
Phone: (956) 548-6000

Certification

By signing below, the undersigned Respondent certifies that they have read and understood the requirements of Chapter 176, Texas Local Government Code, and that the appropriate Conflict of Interest Questionnaire (Form CIQ) has been filed or will be filed as required.

Signature: _____

Printed Name: Jorge De La Garza

Title: President

Date: 04/30/2026

Company Name: Ziwa Corporation

Phone: 956-542-8167

Email: jdlg@ziwacorp.com

CONFLICT OF INTEREST QUESTIONNAIRE

FORM CIQ

For vendor doing business with local governmental entity

This questionnaire reflects changes made to the law by H.B. 23, 84th Leg., Regular Session.

This questionnaire is being filed in accordance with Chapter 176, Local Government Code, by a vendor who has a business relationship as defined by Section 176.001(1-a) with a local governmental entity and the vendor meets requirements under Section 176.006(a).

By law this questionnaire must be filed with the records administrator of the local governmental entity not later than the 7th business day after the date the vendor becomes aware of facts that require the statement to be filed. *See* Section 176.006(a-1), Local Government Code.

A vendor commits an offense if the vendor knowingly violates Section 176.006, Local Government Code. An offense under this section is a misdemeanor.

OFFICE USE ONLY

Date Received

1 **Name of vendor who has a business relationship with local governmental entity.**

Ziwa Corporation

2 ☐ **Check this box if you are filing an update to a previously filed questionnaire.** (The law requires that you file an updated completed questionnaire with the appropriate filing authority not later than the 7th business day after the date on which you became aware that the originally filed questionnaire was incomplete or inaccurate.)

3 **Name of local government officer about whom the information is being disclosed.**

_____

Name of Officer

4 **Describe each employment or other business relationship with the local government officer, or a family member of the officer, as described by Section 176.003(a)(2)(A). Also describe any family relationship with the local government officer. Complete subparts A and B for each employment or business relationship described. Attach additional pages to this Form CIQ as necessary.**

N/A

A. Is the local government officer or a family member of the officer receiving or likely to receive taxable income, other than investment income, from the vendor?

☐ Yes ☐ No

B. Is the vendor receiving or likely to receive taxable income, other than investment income, from or at the direction of the local government officer or a family member of the officer AND the taxable income is not received from the local governmental entity?

☐ Yes ☐ No

5 **Describe each employment or business relationship that the vendor named in Section 1 maintains with a corporation or other business entity with respect to which the local government officer serves as an officer or director, or holds an ownership interest of one percent or more.**

N/A

6 ☐ Check this box if the vendor has given the local government officer or a family member of the officer one or more gifts as described in Section 176.003(a)(2)(B), excluding gifts described in Section 176.003(a-1).

7 Ziwa Corporation

_____

Signature of vendor doing business with the governmental entity

April 30, 2026

Date

Form provided by Texas Ethics Commission www.ethics.state.tx.us Revised 1/1/2021

CONFLICT OF INTEREST QUESTIONNAIRE
For vendor doing business with local governmental entity

A complete copy of Chapter 176 of the Local Government Code may be found at http://www.statutes.legis.state.tx.us/Docs/LG/htm/LG.176.htm. For easy reference, below are some of the sections cited on this form.

Local Government Code § 176.001(1-a): "Business relationship" means a connection between two or more parties based on commercial activity of one of the parties. The term does not include a connection based on:

(A) a transaction that is subject to rate or fee regulation by a federal, state, or local governmental entity or an agency of a federal, state, or local governmental entity;

(B) a transaction conducted at a price and subject to terms available to the public; or

(C) a purchase or lease of goods or services from a person that is chartered by a state or federal agency and that is subject to regular examination by, and reporting to, that agency.

Local Government Code § 176.003(a)(2)(A) and (B):

(a) A local government officer shall file a conflicts disclosure statement with respect to a vendor if:

***

(2) the vendor:

(A) has an employment or other business relationship with the local government officer or a family member of the officer that results in the officer or family member receiving taxable income, other than investment income, that exceeds $2,500 during the 12-month period preceding the date that the officer becomes aware that

(i) a contract between the local governmental entity and vendor has been executed; or

(ii) the local governmental entity is considering entering into a contract with the vendor;

(B) has given to the local government officer or a family member of the officer one or more gifts that have an aggregate value of more than $100 in the 12-month period preceding the date the officer becomes aware that:

(i) a contract between the local governmental entity and vendor has been executed; or

(ii) the local governmental entity is considering entering into a contract with the vendor.

Local Government Code § 176.006(a) and (a-1)

(a) A vendor shall file a completed conflict of interest questionnaire if the vendor has a business relationship with a local governmental entity and:

(1) has an employment or other business relationship with a local government officer of that local governmental entity, or a family member of the officer, described by Section 176.003(a)(2)(A);

(2) has given a local government officer of that local governmental entity, or a family member of the officer, one or more gifts with the aggregate value specified by Section 176.003(a)(2)(B), excluding any gift described by Section 176.003(a-1); or

(3) has a family relationship with a local government officer of that local governmental entity.

(a-1) The completed conflict of interest questionnaire must be filed with the appropriate records administrator not later than the seventh business day after the later of:

(1) the date that the vendor:

(A) begins discussions or negotiations to enter into a contract with the local governmental entity; or

(B) submits to the local governmental entity an application, response to a request for proposals or bids, correspondence, or another writing related to a potential contract with the local governmental entity; or

(2) the date the vendor becomes aware:

(A) of an employment or other business relationship with a local government officer, or a family member of the officer, described by Subsection (a);

(B) that the vendor has given one or more gifts described by Subsection (a); or

(C) of a family relationship with a local government officer.

CERTIFICATE OF INTERESTED PARTIES

FORM 1295

Complete Nos. 1 - 4 and 6 if there are interested parties.
Complete Nos. 1, 2, 3, 5, and 6 if there are no interested parties.

OFFICE USE ONLY
CERTIFICATION OF FILING

Certificate Number:
2026-1455343

Date Filed:
04/30/2026

Date Acknowledged:
07/07/2026

1 Name of business entity filing form, and the city, state and country of the business entity's place of business.

Ziwa Corporation
Brownsville, TX United States

2 Name of governmental entity or state agency that is a party to the contract for which the form is being filed.

City of Brownsville

3 Provide the identification number used by the governmental entity or state agency to track or identify the contract, and provide a description of the services, goods, or other property to be provided under the contract.

196-26-ISD-RFP
Construction Services

4 Name of Interested Party	City, State, Country (place of business)	Nature of interest (check applicable)	
		Controlling	Intermediary
City of Brownsville	Brownsville, TX United States	X	

5 Check only if there is NO Interested Party. ☐

6 UNSWORN DECLARATION

My name is _____, and my date of birth is _____.

My address is _____, _____, _____, _____, _____.
(city) (state) (zip code) (country)

I declare under penalty of perjury that the foregoing is true and correct.

Executed in _____ County, State of _____, on the _____ day of _____, 20_____.
(month) (year)

_____
Signature of authorized agent of contracting business entity
(Declarant)

PROCUREMENT ANALYSIS

Date: Tuesday, July 7, 2026
To: Mr. John Cowen Jr., City Mayor
From: Mr. Alan Guard, Interim City Manager
CC: Mr. Damian Espinoza, Procurement Director
Mr. Juan P. Villarreal, Internal Services Director

Agenda Title:
Agenda Item for the City Commission meeting of Tuesday, July 21, 2026.
"Consideration and Action to Authorize a Contract with Ziwa Corporation in the amount of $3,909,970.00 for Contract No.196-26-ISD-RFP, for a term of 268 working days. (Internal Services Department)

Executive Summary:

- Department: Internal Services Department
- Procurement Method: RFCSP
- Submittals Received: 3
- Contract Number: 196-26-ISD-RFP
- Vendor: Ziwa Corporation.
- Contract Amount: $3,909,970.00
- Term: 268 working days

Background: The Internal Services Department initiated a request to solicit sealed competitive proposals for HVAC upgrades at the Brownsville Animal Regulation and Care Center. The objective of this project is to modernize the facility's HVAC infrastructure, improve reliability, meet ventilation and air quality requirements, enhance animal welfare conditions, and provide a long-term, energy- efficient mechanical system.

Procurement Process:
The Procurement Department issued a Request for Competitive Sealed Proposals (RFCSP) for the HVAC upgrades in accordance with Texas Government Code Chapter 2269, Subchapter D. The solicitation was advertised in the local newspaper and posted on the City's electronic bidding platform. Three proposals were received by the established deadline. The original analysis already documents the advertisement, electronic posting, number of proposals received, and applicable procurement method.

Under the competitive sealed proposal method, proposals are evaluated and ranked according to the selection criteria and corresponding weights published in the solicitation. Selection is based on the proposal determined to provide the best value to the City, considering price together with the other published evaluation factors. After the proposals are evaluated and ranked, the City first attempts to negotiate a satisfactory contract with the highest-ranked proposer.

Following completion of the evaluation process, Ziwa Corporation was identified as the highest-ranked proposer. The City then entered into negotiations with Ziwa Corporation regarding the proposed contract amount and project requirements. Ziwa Corporation's original pricing for the base bid and Alternate No. 1 totaled **$4,003,971**. Through negotiations, the City obtained a final contract price of **$3,909,970**, representing a reduction of **$94,001**, or approximately **2.35%**, from the original combined pricing.

This procurement is governed by:

- **Competitive Sealed Proposal (Construction): Texas Local Government Code Chapter 2269, Subchapter D.**

Results:
The evaluation committee reviewed and scored each proposal in accordance with the evaluation criteria and weights published in the solicitation. Ziwa Corporation ranked first overall with **81.73 points**, followed by SKO Elite, LLC with **81.20 points**, and SpawGlass Contractors, Inc. with **77.47 points**. These rankings are consistent with the results stated in the existing procurement analysis.

Based on the committee's evaluation and ranking, Ziwa Corporation was selected as the highest-ranked proposer for negotiations. Negotiations were successfully completed at a final contract amount of **$3,909,970**. The detailed evaluation and scoring results are included as **Exhibit A**.

Vendor Information:
Vendor Name: Ziwa Corporation
Address: 1952 S. Price Road Brownsville, TX 78521
Point of Contact: Jorge De La Garza – President
Phone/Email: (956) 542-8167 / jdlg@ziwacorp.com

Exhibits & Supporting Documents:

- Exhibit A – Evaluation Results (committee scoring).
- Exhibit B- Texas Ethics Commission Certificate of Interested Parties (Form 1295)

Recommendation:
The Procurement Department recommends that the City Commission authorize a contract with Ziwa Corporation under Request for Competitive Sealed Proposals (RFCSP) , in a total amount not to exceed $3,909,970.00 for a base term of 268 working days.

Approval of this agenda item will authorize the full contract value, including the renewal option. The City Manager will be authorized to execute renewal(s) if exercised.

196-26-ISD-RFP - HVAC Upgrades at the Brownsville Animal Regulation and Care Facility

Scoring Summary

Active Submissions

	A-1 - Forms are signed	A-2 - Financial Capability	B-1 - Technical Approach and Methodology	B-2 - Experience and Qualifications	B-3 - Safety, Compliance & Team Capabilities	B-4 - Cost & Overall Best Value	B-5 - Project Management and Team Capability	Total
Supplier	Pass/Fail	Pass/Fail	/ 10 pts	/ 25 pts	/ 5 pts	/ 40 pts	/ 20 pts	/ 100 pts
ZIWA CORPORATION	Pass	Pass	8.6	19.2	4.8	30.93	18.2	81.73
SKO Elite, LLC.	Pass	Pass	7.4	18	3.2	40	12.6	81.2
SpawGlass Contractors, Inc.	Pass	Pass	7.8	20.2	3.8	27.87	17.8	77.47

CERTIFICATE OF INTERESTED PARTIES

FORM 1295

Complete Nos. 1 - 4 and 6 if there are interested parties.
Complete Nos. 1, 2, 3, 5, and 6 if there are no interested parties.

OFFICE USE ONLY
CERTIFICATION OF FILING

Certificate Number:
2026-1455343

Date Filed:
04/30/2026

Date Acknowledged:
07/07/2026

1 Name of business entity filing form, and the city, state and country of the business entity's place of business.

Ziwa Corporation
Brownsville, TX United States

2 Name of governmental entity or state agency that is a party to the contract for which the form is being filed.

City of Brownsville

3 Provide the identification number used by the governmental entity or state agency to track or identify the contract, and provide a description of the services, goods, or other property to be provided under the contract.

196-26-ISD-RFP
Construction Services

4 Name of Interested Party	City, State, Country (place of business)	Nature of interest (check applicable)	
		Controlling	Intermediary
City of Brownsville	Brownsville, TX United States	X	

5 Check only if there is NO Interested Party. ☐

6 UNSWORN DECLARATION

My name is _____, and my date of birth is _____.

My address is _____, _____, _____, _____, _____.
(city) (state) (zip code) (country)

I declare under penalty of perjury that the foregoing is true and correct.

Executed in _____County, State of _____, on the _____day of _____, 20_____.
(month) (year)

_____
Signature of authorized agent of contracting business entity
(Declarant)

To:	Mayor and City Commission
Through:	Alan Guard, Interim City Manager
From:	Sean De Palma, Parks and Recreation Director
Date:	Tuesday, July 21, 2026
Agenda #:	Consideration and **ACTION** to approve **Resolution Number 2026-073** authorizing the Local Park Grant Program Resolution Authorizing an Application through the signature of a local government official for Texas Parks & Wildlife Grant use for La Posada Park and accepting the terms and conditions of said grant for the City of Brownsville (Parks and Recreation Department).

Summary:
This resolution pertains to the approval of the match grant application between Parks and Recreation Department and theTexas Parks and Wildlife for La Posada Park.

Project Scope and Analysis:
La Posada Park in the City of Brownsville for use as a park site and is hereby dedicated (or will be dedicated upon completion of the proposed acquisition) for public park and recreation purposes in perpetuity (or for the lease term, if legal control is through a lease). Projects with federal monies may have differing requirements.

Funding:

Source:
Amount:
Local Contribution if Applicable:

Recommendation:
The Parks and Recreation Department recommends immediate approval and submission of the Local Park Grant Program application to TPWD. Timely submission will position the City of Brownsville competitively for grant funding and allow for expedited project development, enabling the community to benefit from La Posada Park improvements promptly.

Commission Pillar:
Quality of Life & Vibrancy

Attachments:
1. TPWD Local Parks Grant - La Posada Park (2)

TEXAS PARKS & WILDLIFE

Local Park Grant Program
Resolution Authorizing Application

A resolution of the City of Brownsville as hereinafter referred to as "Applicant," designating certain officials as being responsible for, acting for, and on behalf of the Applicant in dealing with the Texas Parks & Wildlife Department, hereinafter referred to as "Department," for the purpose of participating in the Local Park Grant Program, hereinafter referred to as the "Program"; certifying that the Applicant is eligible to receive program assistance; certifying that the Applicant matching share is readily available; and dedicating the proposed site for permanent (or for the term of the lease for leased property) public park and recreational uses.

WHEREAS, the Applicant is fully eligible to receive assistance under the Program; and

WHEREAS, the Applicant is desirous of authorizing an official to represent and act for the Applicant in dealing with the Department concerning the Program;

BE IT RESOLVED BY THE APPLICANT:

SECTION 1: That the Applicant hereby certifies that they are eligible to receive assistance under the Program, and that notice of the application has been posted according to local public hearing requirements.

SECTION 2: That the Applicant hereby certifies that the matching share for this application is readily available at this time.

SECTION 3: That the Applicant hereby authorizes and directs the City of Brownsville's Parks and Recreation Department's Director to act for the Applicant in dealing with the Department for the purposes of the Program, and that Mr. Sean De Palma is hereby officially designated as the representative in this regard.

SECTION 4: The Applicant hereby specifically authorizes the official to make application to the Department concerning the site to be known as La Posada Park in the City of Brownsville for use as a park site and is hereby dedicated (or will be dedicated upon completion of the proposed acquisition) for public park and recreation purposes in perpetuity (or for the lease term, if legal control is through a lease). Projects with federal monies may have differing requirements.

Introduced, read and passed by an affirmative vote of the "Applicant" on this 21st day of July, 2026.

_____
Signature of Local Government Official

_____
Typed Name and Title

ATTEST:

_____
Signature

_____
Typed Name and Title

PWD 1069B – P4000 (01/2014)

To:	Mayor and City Commission
Through:	Alan Guard, Interim City Manager
From:	
Date:	Tuesday, July 21, 2026
Agenda #:	Consideration and **ACTION** to approve **Resolution Number 2026-110** creating the Brownsville Sports Commission to evaluate the current use, future programming opportunities, and long-term sustainability of professional and amateur sports programs within the City, and to provide recommendations to the City Commission; Adopting the Bylaws for said Commission; and authorizing City staff to take all necessary administrative actions related thereto. (City Manager's Office)

Summary:

Project Scope and Analysis:

Funding:

Source:

Amount:

Local Contribution if Applicable:

Recommendation:

Commission Pillar:

Attachments:

None

To:	Mayor and City Commission
Through:	Alan Guard, Interim City Manager
From:	Will Trevino, City Attorney, Alan Guard, Interim City Manager
Date:	Tuesday, July 21, 2026
Agenda #:	Consideration and **APPROVAL** on **SECOND** and **FINAL READING** on **Ordinance Number 2026-1808** amending Chapter 102 of the City of Brownsville Code of Ordinance to adjust the Resaca Fee. (Brownsville Public Utilities Board)

Summary:
From a letter addressed to Mr. Alan Guard dated July 1, 2026 from Mrs. Marilyn Gilbert:

The Home-Rule Charter of the City of Brownsville, Texas, provides that if any adjustments to the rates, fees and charges for utility services are recommended by the Brownsville Public Utilities Board (sometimes "BPUB" or "Board"), the Board must submit to the City Commission a report of its review and the basis upon which the proposed adjustment is predicated, along with a request for approval and adoption of the rates, fees and charges so recommended. As the BPUB's General Manager and CEO, I am pleased to forward the Board's revised request to the City Commission for consideration, public hearing, and possible action.

On May 11, 2026, the Board approved Resolution No. 2026-004, recommending an amendment to Section 102-81 (Resaca Fee) of the Code of Ordinances to reduce the Resaca Fee. In adopting this Resolution, the Board had considered the options of elimination or reduction of the fee based upon recent developments, and the materials considered at the Board meeting, including drafts of resolutions and ordinances implementing either option was included with materials forwarded to the City Commission.

On June 16, 2026, after considering BPUB's presentation of its recommendation, the City Commission approved Ordinance 2026-1808 on Public Hearing and First Reading to eliminate the Resaca Fee. The attached draft ordinance, which is consistent with this Commission decision, was provided previously, but has been modified slightly. For example, to allow Board staff sufficient time to effectively implement the elimination of the Resaca Fee, a new Section 3 is added to specify that the removal of the fee will be reflected in the first bill received after the first day of the month in which the rate change is effective under Section 5. In addition, on July 13, 2026, the Board is considering approval of a resolution recommending the elimination of the Resaca Fee. If adopted by the Board, the resolution will be forwarded to the City Commission in

advance of the July 21 meeting. This reference is included in the draft ordinance. Other non-substantive changes were made for review by the City Attorney.

...

Project Scope and Analysis:

Funding:

Source:
Amount:
Local Contribution if Applicable:

Recommendation:
Staff recommends reviewing and considering the BPUB Board's recommendations.

Commission Pillar:
Economic Development, Planning & Zoning, Infrastructure, Public Safety, Quality of Life & Vibrancy, Governance

Attachments:
1. 260701 DRAFT COB Ordinance-Eliminate Resaca Fee_
2. 260701 Ltr for Placement of Agenda Item - Resaca Fee Elimination
3. BPUB Resolution 2026-004-Resaca Fee-Request for CCMTG June 16 2026

ORDINANCE NUMBER 2026-1608
(As amended and Restated)

AN ORDINANCE OF THE CITY OF BROWNSVILLE, TEXAS, AMENDING CHAPTER 102 "UTILITIES," ARTICLE III "RATES AND CHARGES," OF THE CODE OF ORDINANCES; REPEALING SECTION 102-81 "RESACA FEE" TO ELIMINATE THE RESACA FEE; PROVIDING FOR SEVERABILITY; AND PROVIDING FOR AN EFFECTIVE DATE

WHEREAS, Article VI, Section 1 of the Home Rule Charter of the City of Brownsville, Texas, ("Charter") establishes the Public Utilities Board of the City of Brownsville, Texas ("Board" or "BPUB") as a separate and distinct agency of the City having absolute and complete authority and power with reference to the control, management and operation of the City's power and light, water and wastewater systems (the "System") and with reference to the expenditure and application of the revenues of the System, subject to the provisions of the article; and

WHEREAS, as part of the water and wastewater utility systems, BPUB maintains reservoirs and portions of the resaca systems in and around the City in order to, among other reasons, maintain raw water storage for the System; and

WHEREAS, Article VI, Section 4(b) of the Charter requires BPUB to periodically "review the rates, fees and charges for services rendered by the utilities system, ... and in the event such review reflects a necessity for the adjustment ... of such rates, fees and charges, then [BPUB] shall submit to the City Commission a report of the review, and the basis upon which the proposed adjustment is predicated, accompanied by a written request for approval and adoption of the rates, fees, and charges recommended by the Board"; and

WHEREAS, Article VI, Sec. 4(b) of the Charter further provides that the City Commission shall pass an ordinance placing in effect the rates, fees, and charges recommended by BPUB only if the City Commission approves the adjustment(s) thus recommended; and

WHEREAS, on April 3, 2026, the U.S. Army Corps of Engineers (USACE) informed the City of the termination of the "Resacas In The Vicinity of The City of Brownsville, Texas, Ecosystem Restoration Project," a project for which the City was local sponsor and for which BPUB was to collect the anticipated local share through Resaca Fee revenue to finance the City's share of project expenses; and

WHEREAS, by Resolution No. 2026-____, adopted on July 13, 2026, the Board determined that remaining funds collected through the Resaca Fee can and should be expended on the maintenance of and improvement to reservoirs and those portions of resacas most directly used for raw water storage that are used and useful in directly supporting the System until such funds are depleted, and that BPUB staff will incorporate the reasonable and necessary dredging costs into a future cost-of-service study and intends to recover such costs through water rates in the future as part of raw water operations; and

WHEREAS, the Board also finds that the remaining funds collected through the Resaca Fee will be used for other eligible purposes, including matching or supplementing of those grants awarded through the Bureau of Reclamation and other funding programs, together with any other authorized uses consistent with applicable law and the requirements governing the expenditure of such funds; and

WHEREAS, the Board bases its recommendation and request upon a sound evaluation consistent with applicable ratemaking standards, and upon recommendations of BPUB staff and consultants, which have been provide with the Board's recommendations; and

WHEREAS, the City Commission hereby finds that the recommendation of the Board is reasonable and necessary to ensure the efficient operation of the utility systems, keep such systems in operation, and render adequate service to the City and its inhabitants and as such should be approved and adopted in order to provide for the continued preservation of the public health, safety, and welfare of the people;

NOW, THEREFORE, BE IT ORDAINED BY THE CITY COMMISSION OF THE CITY OF BROWNSVILLE, TEXAS:

Section 1. *Amendment to Chapter 102, Utilities; Article III, Rates and Charges*; Section 102-81, Resaca Fee, is hereby repealed and eliminated.

Section 2. *Public Hearing*. A hearing for public input as to the elimination of the Resaca Fee set forth in Section 1 of this Ordinance will be held at 5:00 p.m., on June 16, 2026, in the City Commission Chambers at City Hall.

Section 3. *Billing Implementation*. The elimination of the resaca fee provided for in this Ordinance shall apply to all water service accounts to which the Resaca Fee was previously assessed for the billing month immediately following the month in which such elimination becomes effective as set forth herein, so that the removal of the resaca fee shall be reflected in the first bill received after the first day of the month in which the elimination is effective.

Section 4. *Severability*. If any section, sentence, phrase, or clause of this Ordinance is declared by a Court of competent jurisdiction to be unconstitutional, invalid, or unenforceable, such declaration shall not be deemed to affect the remaining sections, sentences, phrases, or clauses of this Ordinance.

Section 5. *Effective Date*. This Ordinance shall become effective at 12:01 a.m. on the date of final approval upon second reading, as provided by the Charter of the City of Brownsville and the laws of the State of Texas.

PASSED and APPROVED following a Public Hearing on FIRST READING on the 16th day of June, 2026.

PASSED and APPROVED on SECOND AND FINAL READING on the _____ day of _____, 2026.

_____
John Cowen, Jr.
Mayor

ATTEST:

_____
Mayra Rios
City Secretary

BROWNSVILLE
PUBLIC UTILITIES BOARD

July 1, 2026

Alan Guard
City Manager
City of Brownsville
P.O. Box 911
Brownsville, Texas 78520

RE: Request for Agenda Item Placement on City Commission Meeting Agenda for July 21, 2026 (Second Reading of Ordinance No. 2026-1808, as amended and restated)

Dear Mr. Guard:

The Home-Rule Charter of the City of Brownsville, Texas, provides that if any adjustments to the rates, fees and charges for utility services are recommended by the Brownsville Public Utilities Board (sometimes "BPUB" or "Board"), the Board must submit to the City Commission a report of its review and the basis upon which the proposed adjustment is predicated, along with a request for approval and adoption of the rates, fees and charges so recommended. As the BPUB's General Manager and CEO, I am pleased to forward the Board's revised request to the City Commission for consideration, public hearing, and possible action.

On May 11, 2026, the Board approved Resolution No. 2026-004, recommending an amendment to Section 102-81 (Resaca Fee) of the Code of Ordinances to reduce the Resaca Fee. In adopting this Resolution, the Board had considered the options of elimination or reduction of the fee based upon recent developments, and the materials considered at the Board meeting, including drafts of resolutions and ordinances implementing either option was included with materials forwarded to the City Commission.

On June 16, 2026, after considering BPUB's presentation of its recommendation, the City Commission approved Ordinance 2026-1808 on Public Hearing and First Reading to eliminate the Resaca Fee. The attached draft ordinance, which is consistent with this Commission decision, was provided previously, but has been modified slightly. For example, to allow Board staff sufficient time to effectively implement the elimination of the Resaca Fee, a new Section 3 is added to specify that the removal of the fee will be reflected in the first bill received after the first day of the month in which the rate change is effective under Section 5. In addition, on July 13, 2026, the Board is considering approval of a resolution recommending the elimination of the Resaca Fee. If adopted

Brownsville Public Utilities Board
1425 Robinhood Drive
P.O. Box 3270
Brownsville, TX 78521

www.brownsville-pub.com
(956) 983-6100
Fax: (956) 983-6289

by the Board, the resolution will be forwarded to the City Commission in advance of the July 21 meeting. This reference is included in the draft ordinance. Other non-substantive changes were made for review by the City Attorney.

BPUB staff is available to address any questions or comments that may be raised through the City Commission's process of consideration. Please contact my office should you have questions.

Respectfully,

Marilyn D. Gilbert

Marilyn D. Gilbert
General Manager & Chief Executive Office

Attachment (as stated)

c: Will Trevino, City Attorney
Constanza Miner, Chief Administrative Office
Paul Gonzalez, General Counsel & Chief Legal Office
File

Brownsville Public Utilities Board
1425 Robinhood Drive
P.O. Box 3270
Brownsville, TX 78521

www.brownsville-pub.com
(956) 983-6100
Fax: (956) 983-6289

BROWNSVILLE
PUBLIC UTILITIES BOARD

June 5, 2026

Alan Guard
Interim City Manager
City of Brownsville
P.O. Box 911
Brownsville, TX, 78520

Re: **Request for Agenda Item Placement — City Commission Meeting on June 16, 2026**

Dear Mr. Guard:

Under the Charter of the City of Brownsville, if any adjustments to the rates, fees and charges for utility services are recommended by the Brownsville Public Utilities Board ("BPUB" or "Board"), the Board must submit to the City Commission a report of its review and the basis upon which the proposed adjustment is predicated, requesting approval and adoption of the rates, fees and charges recommended by the Board. As BPUB's General Manager and CEO, I am pleased to forward the Board's request and report to the City Commission for consideration, public hearing, and possible action.

On May 11, 2026, the Board approved Resolution No. 2026-004 accepting the recommended amendment to Section 102-81, Resaca Fee, of the Code of Ordinances and determined that the recommendation is in the best interest of the Board's utility customers. Consistent with the discussion held during the Board meeting, the Board is providing both the reduction and elimination versions of the Resolution and the corresponding draft ordinances that were included as packet materials along with the Board's formal recommendation being the reduction of the Resaca Fee to $2.00.

Accordingly, the General Manager and Chief Executive Officer, or her designee, hereby submits the Board's recommendation to amend Section 102-81, Resaca Fee, of the Code of Ordinances for consideration by the City Commission of the City of Brownsville, Texas, to reduce the Resaca Fee to $2.00. Enclosed are copies the Resolution and draft ordinance.

We respectfully request notification of the Commission's decision and the effective date so that billing can be adjusted accordingly.

BPUB staff is available to address any questions or comments raised through the City Commission's consideration process. Please contact my office if you need any additional information.

Thank you for your prompt attention to this matter.

Sincerely,

Marilyn D. Gilbert by AHH

Marilyn D. Gilbert
General Manager & Chief Executive Officer

CC: Will Trevino, City Attorney
Constanza Miner, Chief Administrative Officer
Paul Gonzalez, General Counsel & Chief Legal Officer

RESOLUTION NO. 2026-004

A RESOLUTION OF THE BROWNSVILLE PUBLIC UTILITIES BOARD RECOMMENDING THE REDUCTION OF THE RESACA FEE AND REQUESTING THE CITY COMMISSION TO AMEND CHAPTER 102 OF THE CODE OF ORDINANCES ENTITLED "UTILITIES" TO REFLECT THE RECOMMENDED REDUCTION OF THE RESACA FEE

WHEREAS, Article VI, Section 1 of the Home Rule Charter of the City of Brownsville, Texas, ("Charter") establishes the Public Utilities Board of the City of Brownsville, Texas ("Board" or "BPUB") as a separate and distinct agency of the City of Brownsville ("City"), having absolute and complete authority and power with reference to the control, management and operation of the City's power and light, water and wastewater systems (the "System") and with reference to the expenditure and application of the revenues of the System, subject to the provisions of the article; and

WHEREAS, Article VI, Section 4(b) of the Charter requires BPUB to periodically "review the rates, fees and charges for services rendered by the utilities system, ... and in the event such review reflects a necessity for the adjustment ... of such rates, fees and charges, then [BPUB] shall submit to the City Commission a report of the review, and the basis upon which the proposed adjustment is predicated, accompanied by a written request for approval and adoption of the rates, fees, and charges recommended by the Board"; and

WHEREAS, as part of the water and wastewater utility systems, BPUB maintains reservoirs and portions of the resaca systems in and around the City in order to, among other reasons, maintain raw water storage for the System; and

WHEREAS, in connection with said maintenance and improvement of resacas, City, as local sponsor, and BPUB collaborated with the U.S. Army Corps of Engineers ("USACE") to receive federal funding for the "Resacas In The Vicinity of The City of Brownsville, Texas, Ecosystem Restoration Project" (the "USACE Project"): and

WHEREAS, BPUB has also collaborated with the City to receive federal resaca maintenance and improvement funding through the U.S. Bureau of Reclamation ("BOR") under the Resources and Ecosystems Sustainability, Tourist Opportunities, and Revived Economies of the Gulf Coast States Act (the "RESTORE Act Project"): and

WHEREAS, in 2020 BPUB engaged an independent consulting and engineering firm, Willdan Group, Inc., to complete a study of the adequacy of water and wastewater rates, fees and charges (the "Rate Study") in light of customer growth, increased operating costs, the USACE Project and RESTORE Act Project and projected capital improvements required over the next decade, inclusive of potential options for recovery of existing and planned resaca-related costs, consistent with the Charter, City bond ordinances, and applicable law and ratemaking principles; and, which, upon completion, recommended adoption of a Resaca Fee to recover costs related to resaca maintenance and improvement programs, including options for phasing in these rates, fees, and charges; and

WHEREAS, BPUB staff reviewed the Rate Study and, based on thereon, recommended that the Board adopt a Resaca Fee to fund resaca maintenance programs, including dredging operations and non-federally funded portions of the USACE Project and the RESTORE Act Project: and

WHEREAS, pursuant to Resolution No. 2022-03 I 4-(IC6), approved March 14, 2022, the Board found that adoption of a Resaca Fee and certain specified annual increases over a five-year period thereto was reasonable and necessary to effectuate the public purposes of recovering costs related to the maintenance and improvement of City resacas used and useful in supporting the water and wastewater utility systems under BPUB 's management and control: and

WHEREAS, BPUB submitted the Rate Study and BPUB Resolution No. 2022-0314-(IC6) to the City Commission, thereby providing a written request for approval and adoption of the rates, fees and charges therein recommended by the Board: and

WHEREAS, pursuant to Ordinance No. 2022-1701, approved May 3, 2022, the City Commission found that said recommendation was reasonable and necessary for the public purpose of operating the City's water and wastewater systems and should be adopted in order to provide for the continued preservation of the public health, safety, and welfare of the people and added Section 102-81 to the City's Code of Ordinances, adopting a Resaca Fee of $4.50, effective June 1, 2022; of $6.25, effective January 1, 2023; a Resaca Fee of $10.00, effective January I, 2024; and a Resaca Fee of $12.00, effective January 1, 2026; and

WHEREAS, after reviewing concerns raised by the City Commission in April 2023 regarding the Resaca Fee, and in light of delays in implementation of the USACE Project, BPUB determined that the existing fee of $6.25 was adequate to support ongoing resaca restoration activities and, at its September 11, 2023 meeting, the Board recommended that the Resaca Fee not be increased on January 1, 2024, and January 1, 2026, as contemplated by Ordinance No. 2022-1701, and, pursuant to City Ordinance No. 2023-1701-A, approved November 13, 2023, the City Commission amended Section 102-81 to Chapter 102, preserving the Resaca Fee at $6.25; and

WHEREAS, BPUB applied for and was awarded a $3.000,000 grant on September 12, 2025, from the BOR's WaterSMART program for a $4,554,700 ecosystem restoration on a portion of Resaca de la Guerra, expected to be completed in 2027; and

WHEREAS, the USACE informed the City on April 3, 2026, of termination of the USACE Project after encountering significant administrative and operational challenges, including the City's unwillingness to acquire required real estate interests, which has prevented the City and USACE from executing a Project Partnership Agreement, thereby jeopardizing the project's viability, timely delivery, and ability to meet its intended objectives; and

WHEREAS, the Rate Study included the funding of the City's local share of the USACE Project as a component of anticipated costs, however, the Board has continued to perform dredging operations, completing all projects associated with the RESTORE Act, and is currently conducting a restoration project partially funded by the BOR's WaterSMART program, and, as of March 31, 2026, the Board has a balance of $9.086.616.66 in funds collected from the Resaca Fee for continued and ongoing operations; and

WHEREAS, the staff of BPUB has informed the Board that remaining funds collected through the Resaca Fee can and should be expended on the maintenance of and improvement to reservoirs and those portions of resacas most directly used for raw water storage that are used and useful in directly supporting the System and that the Resaca Fee can be reduced to $2.00 per water account to accomplish the public purposes of the program, and

WHEREAS, the Board has reviewed the recommended changes to Section 102-81 of the Code of Ordinances and determined that the recommendations are in the public interest of the Board's utility customers;

NOW, THEREFORE, BE IT RESOLVED BY THE PUBLIC UTILITIES BOARD OF THE CITY OF BROWNSVILLE, TEXAS:

1. The foregoing recitals contained in this Resolution are incorporated herein by reference and adopted in their entirety as findings of fact and determinations of the Public Utilities Board of the City of Brownsville, and the Board relies upon such recitals in approving and authorizing the actions contemplated hereby.

2. The Board finds that the reduction of the Resaca Fee to $2.00 is reasonable and necessary to effectuate the public purposes of recovering costs related to the maintenance and improvement reservoirs and those portions of the resacas used and useful in supporting the water and wastewater utility systems and in completing the RESTORE Act Program;

3. The General Manager & Chief Executive Officer, or her delegee, submit immediately the Board's recommendation to amend Section 102-81 of the Code of Ordinances to the City Commission of the City of Brownsville, Texas, to reduce the Resaca Fee to $2.00, together with a copy of this Resolution and a draft ordinance to reflect the requested amendment to Section 102-81 of the Code of Ordinances.

4. That the Board, by this Resolution, requests in writing that the City Commission approve and adopt the reduction of the Resaca Fee to $2.00, recommended by passing an appropriate ordinance placing such rates, fees, and charges, and modifications in effect.

Passed and approved this 11th day of May 2026.

Gerardo Martinez, Chair

ATTEST:

Daisy Zamora, PhD, Secretary/Treasurer

ORDINANCE NUMBER _____

AN ORDINANCE OF THE CITY OF BROWNSVILLE, TEXAS, AMENDING CHAPTER 102 "UTILITIES," ARTICLE III "RATES AND CHARGES," DIVISION 1. "GENERALLY," OF THE CODE OF ORDINANCES; AMENDING SECTION 102-81, "RESACA FEE," TO REDUCE THE RESACA FEE; PROVIDING FOR SEVERABILITY; AND PROVIDING FOR AN EFFECTIVE DATE.

WHEREAS, Article VI, Section 1 of the Home Rule Charter of the City of Brownsville, Texas, ("Charter") establishes the Public Utilities Board of the City of Brownsville, Texas ("Board" or "BPUB") as a separate and distinct agency of the City of Brownsville ("City") having absolute and complete authority and power with reference to the control, management and operation of the City's power and light, water and wastewater systems (the "System") and with reference to the expenditure and application of the revenues of the System, subject to the provisions of the article; and

WHEREAS, as part of the water and wastewater utility systems, BPUB maintains reservoirs and portions of the resaca systems in and around the City in order to, among other reasons, maintain raw water storage for the System; and

WHEREAS, Article VI, Section 4(b) of the Charter requires BPUB to periodically "review the rates, fees and charges for services rendered by the utilities system, ... and in the event such review reflects a necessity for the adjustment ... of such rates, fees and charges, then [BPUB] shall submit to the City Commission a report of the review, and the basis upon which the proposed adjustment is predicated, accompanied by a written request for approval and adoption of the rates, fees, and charges recommended by the Board"; and

WHEREAS, Article VI, Sec. 4(b) of the Charter further provides that the City Commission shall pass an ordinance placing in effect the rates, fees, and charges recommended by BPUB only if the City Commission approves the adjustment(s) thus recommended; and

WHEREAS, pursuant to Resolution No. 2022-03 l 4-(IC6), approved March 14, 2022, the Board found that adoption of a Resaca Fee and certain specified annual increases over a five-year period thereto was reasonable and necessary to effectuate the public purposes of recovering costs related to the maintenance and improvement of City resacas used and useful in supporting the water and wastewater utility systems under BPUB 's management and control; and

WHEREAS, pursuant to Ordinance No. 2022-1701, approved May 3, 2022, the City Commission found that said recommendation was reasonable and necessary for the public purpose of operating the City's water and wastewater systems and should be adopted in order to provide for the continued preservation of the public health, safety, and welfare of the people and added Section 102-81 to the City's Code of Ordinances, adopting a Resaca Fee of $4.50, effective June 1, 2022; of $6.25, effective January 1, 2023; a Resaca Fee of $10.00, effective January I, 2024; and a Resaca Fee of $12.00, effective January 1, 2026; and

WHEREAS, the USACE informed the City on April 3, 2026, of termination of the USACE Project after encountering significant administrative and operational challenges, including the City's unwillingness to acquire required real estate interests, which has prevented the City and USACE from executing a Project Partnership Agreement, thereby jeopardizing the project's viability, timely delivery, and ability to meet its intended objectives; and

WHEREAS, by Resolution No. 2026-004, adopted on May 11, 2026, the Board determined that funds collected through the Resaca Fee should continue to be expended on the maintenance of and improvement to reservoirs and those portions of resacas most directly used for raw water storage that are used and useful in directly supporting the System, and that, as a result of the termination of the USACE Project and other recent developments, the Board recommends that the Resaca Fee should be reduced to $2.00 per water account; and

WHEREAS, the City Commission hereby finds that the recommendations of the Board are reasonable and necessary to ensure the efficient operation of the utility systems, keep such systems in operation, and render adequate service to the City and its inhabitants and, therefore, should be approved and adopted in order to provide for the continued preservation of the public health, safety, and welfare;

NOW, THEREFORE, BE IT ORDAINED BY THE CITY COMMISSION OF THE CITY OF BROWNSVILLE, TEXAS:

Section 1. *Amendment to Chapter 102, Utilities, art. III, Rates and Charges.* Section 102-81, Resaca Fee, chapter 102 of the Code of Ordinances of the City of Brownsville, Texas is hereby amended to implement a fixed resaca fee of $2.00 and provide as follows:

> Sec. 102-81. Resaca Fee.
> A monthly resaca fee of $2.00 is applicable to a retail water customer.

Section 2. *Public Hearing*. A hearing for public input as to the fee adjustments set forth in Section 1 of this Ordinance will be held at 5:00 p.m., on _____, _____, 2026, in City Commission Chambers at City Hall.

Section 3. *Severability*. If any section, sentence, phrase, or clause of this Ordinance is declared by a Court of competent jurisdiction to be unconstitutional, invalid, or unenforceable, such declaration shall not be deemed to affect the remaining sections, sentences, phrases, or clauses of this Ordinance.

Section 4. *Effective Date*. This Ordinance shall become effective at 12:01 a.m., on the date of final approval upon second reading, as provided by the Charter of the City of Brownsville and the laws of the State of Texas.

PASSED and APPROVED following a Public Hearing on FIRST READING on the _____ day of _____, 2026.

PASSED and APPROVED on SECOND AND FINAL READING on the _____ day of _____, 2026.

_____
John Cowen, Jr.
Mayor

ATTEST:

_____
Mayra Rios
City Secretary

BROWNSVILLE
PUBLIC UTILITIES BOARD

Meeting Date
May 11, 2026

Posting Language
G.4 - Consideration and Possible Action on a Resolution Approving to Reduce or Eliminate the Resaca Fee

Open/Closed Session
Items for Individual Consideration

Action
Resolution
Approval

Executive Sponsor
Lead Department: 4105-Operations Office

Assigned Staff (Presenter): Mark Dombroski

Summary
At its regular meeting on July 7, 2025, the Board of Directors directed the General Manager and CEO to organize a Resaca workshop for all Board members. The Chairperson subsequently issued the workshop agenda on August 1, 2025, and the workshop was conducted in conjunction with the October 12, 2025, Board meeting. During that session, staff presented governance options and recommended a BPUB-led strategy focused on eliminating the current Resaca Fee, enhancing operational practices to improve raw water storage for the Water Utility, and preserving community benefits at Town Resaca, Resaca del Rancho Viejo, and Resaca de la Guerra. The strategy also contemplated completing key restoration efforts, including the RESTORE Act project at Town Resaca and the Bureau of Reclamation WaterSMART project at Resaca de la Guerra, while reserving funding for Contract 1 of the U.S. Army Corps of Engineers (USACE) project, contingent upon the City of Brownsville's participation.

A related item was presented for individual consideration at the October 13, 2025, Board meeting to allow the Board to make a formal recommendation to the Brownsville City Commission regarding potential changes to the Resaca Fee and associated operations. However, no action was taken at that time.

On April 3, 2026, the USACE notified the City of Brownsville that it was terminating the ecosystem restoration project due to significant administrative and operational challenges, including the City's unwillingness to acquire the necessary real estate interests. As a result, the

USACE was unable to execute a Project Partnership Agreement, effectively halting the project and jeopardizing its intended outcomes.

In response, the Board requested that the General Manager and CEO return to the May 11, 2026, Board meeting with options for recommending to the City Commission the reduction or elimination of the Resaca Fee.

BPUB staff have prepared the necessary resolutions and ordinances for Board consideration and potential action.

Strategic Initiatives

Referring Committee

Name of Committees _____

Date of Meeting _____

Recommendation(s) _____

Vote(s) _____

Fiscal Impact

Budgeted	Bid Award	Reallocation	No Fiscal Impact	X

Amount Requested: _____

Source of Funding: _____

Recommended Motion

The Board of Directors shall determine its action.

Option A

RESOLUTION No. 2026-XXX

A RESOLUTION APPROVING THE REDUCTION OF THE RESACA FEE AND REQUESTING THE CITY COMMISSION TO AMEND CHAPTER 102 OF THE CODE OF ORDINANCES ENTITLED "UTILITIES" TO APPROVE THE REDUCTION OF THE RESACA FEE

WHEREAS, Article VI, Section 1 of the Home Rule Charter of the City of Brownsville, Texas, ("Charter") establishes the Public Utilities Board of the City of Brownsville, Texas ("Board" or "BPUB") as a separate and distinct agency of the City having absolute and complete authority and power with reference to the control, management and operation of the City's power and light, water and wastewater systems (the "System") and with reference to the expenditure and application of the revenues of the System, subject to the provisions of the article; and

WHEREAS, Article VI, Section 4(b) of the Charter requires BPUB to periodically "review the rates, fees and charges for services rendered by the utilities system, ... and in the event such review reflects a necessity for the adjustment ... of such rates, fees and charges, then [BPUB] shall submit to the City Commission a report of the review, and the basis upon which the proposed adjustment is predicated, accompanied by a written request for approval and adoption of the rates, fees, and charges recommended by the Board"; and

WHEREAS, as part of the water and wastewater utility systems, BPUB maintains reservoirs and portions of the resaca systems in and around the City in order to, among other reasons, maintain raw water storage for the System; and

WHEREAS, in connection with said maintenance and improvement of resacas, City, as local sponsor, and BPUB collaborated with the U.S. Army Corps of Engineers ("USACE") to receive federal funding for the "Resacas In The Vicinity of The City of Brownsville, Texas, Ecosystem Restoration Project" (the "USACE Project"); and

WHEREAS, BPUB has also collaborated with the City to receive federal resaca maintenance and improvement funding through the U.S. Bureau of Reclamation ("BOR") under the Resources and Ecosystems Sustainability, Tourist Opportunities, and Revived Economies of the Gulf Coast States Act (the "RESTORE Act Project"); and

WHEREAS, in 2020 BPUB engaged an independent consulting and engineering firm, Willdan Group, Inc., to complete a study of the adequacy of water and wastewater rates, fees and charges (the "Rate Study") in light of customer growth, increased operating costs, the USACE Project and RESTORE Act Project and projected capital improvements required over the next decade, inclusive of potential options for recovery of existing and planned resaca-related costs, consistent with the Charter, City bond ordinances, and applicable law and ratemaking principles; and, which, upon completion, recommended adoption of a Resaca Fee to recover costs related to resaca maintenance and improvement programs, including options for phasing in these rates, fees, and charges; and

WHEREAS, BPUB staff reviewed the Rate Study and, based on thereon, recommended that the Board adopt a Resaca Fee to fund resaca maintenance programs, including dredging operations and non-federally funded portions of the USACE Project and the RESTORE Act Project; and

WHEREAS, pursuant to Resolution No. 2022-03 l 4-(IC6), approved March 14, 2022, the Board found that adoption of a Resaca Fee and certain specified annual increases over a five-year period thereto was reasonable and necessary to effectuate the public purposes of recovering costs related to the maintenance and improvement of City resacas used and useful in supporting the water and wastewater utility systems under BPUB 's management and control; and

WHEREAS, BPUB submitted the Rate Study and BPUB Resolution No. 2022-0314-(IC6) to the City Commission, thereby providing a written request for approval and adoption of the rates, fees and charges therein recommended by the Board; and

WHEREAS, pursuant to Ordinance No. 2022-1701, approved May 3, 2022, the City Commission found that said recommendation was reasonable and necessary for the public purpose of operating the City's water and wastewater systems and should be adopted in order to provide for the continued preservation of the public health, safety, and welfare of the people and added Section 102-81 to the City's Code of Ordinances, adopting a Resaca Fee of $4.50, effective June 1, 2022; of $6.25, effective January 1, 2023; a Resaca Fee of $10.00, effective January I, 2024; and a Resaca Fee of $12.00, effective January 1, 2026; and

WHEREAS, after reviewing concerns raised by the City Commission in April 2023 regarding the Resaca Fee, and in light of delays in implementation of the USACE Project, BPUB determined that the existing fee of $6.25 was adequate to support ongoing resaca restoration activities and, at its September 11, 2023 meeting, the Board recommended that the Resaca Fee not be increased on January 1, 2024, and January 1, 2026, as contemplated by Ordinance No. 2022-1701, and, pursuant to City Ordinance No. 2023-1701-A, approved November 13, 2023, the City Commission amended Section 102-81 to Chapter 102, preserving the Resaca Fee at $6.25; and

WHEREAS, BPUB applied for and was awarded a $3,000,000 grant on September 12, 2025, from the BOR's WaterSMART program for a $4,554,700 ecosystem restoration on a portion of Resaca de la Guerra, expected to be completed in 2027; and

WHEREAS, the USACE informed the City on April 3, 2026, of termination of the USACE Project after encountering significant administrative and operational challenges, including the City's unwillingness to acquire required real estate interests, which has prevented the City and USACE from executing a Project Partnership Agreement, thereby jeopardizing the project's viability, timely delivery, and ability to meet its intended objectives; and

WHEREAS, the Rate Study included the funding of the City's local share of the USACE Project as a component of anticipated costs, however, the Board has continued to perform dredging operations, completing all projects associated with the RESTORE Act, and is currently conducting a restoration project partially funded by the BOR's WaterSMART program, and, as of March 31, 2026, the Board has a balance of $9,086,616.66 in funds collected from the Resaca Fee for continued and ongoing operations; and

WHEREAS, the staff of BPUB has informed the Board that remaining funds collected through the Resaca Fee can and should be expended on the maintenance of and improvement to reservoirs and those portions of resacas most directly used for raw water storage that are used and useful in directly supporting the System and that the Resaca Fee can be reduced to $2.33 per water account to accomplish the public purposes of the program, and

WHEREAS, the Board has reviewed the recommended changes to Section 102-81 of the Code of Ordinances and determined that the recommendations are based upon a sound evaluation consistent with applicable ratemaking standards and are in the public interest of the Board's utility customers;

NOW, THEREFORE, BE IT RESOLVED BY THE PUBLIC UTILITIES BOARD OF THE CITY OF BROWNSVILLE, TEXAS:

1. The foregoing recitals contained in this Resolution are incorporated herein by reference and adopted in their entirety as findings of fact and determinations of the Public Utilities Board of the City of Brownsville, and the Board relies upon such recitals in approving and authorizing the actions contemplated hereby.

2. The Board finds that the reduction of the Resaca Fee to $2.33 is reasonable and necessary to effectuate the public purposes of recovering costs related to the maintenance and improvement reservoirs and those portions of the resacas used and useful in supporting the water and wastewater utility systems and in completing the RESTORE Act Program;

3. The General Manager & Chief Executive Officer, or her delegee, submit immediately the Board's recommendation to amend Section 102-81 of the Code of Ordinances to the City Commission of the City of Brownsville, Texas, to reduce the Resaca Fee to $2.33, together with a copy of this Resolution and a draft ordinance to reflect the requested amendment to Section 102-81 of the Code of Ordinances.

4. That the Board, by this Resolution, requests in writing that the City Commission approve and adopt the reduction of the Resaca Fee to $2.33 recommended by passing an appropriate ordinance placing such rates, fees, and charges, and modifications in effect.

Passed and approved this ___ day of _____ 2026.

_____
Gerardo Martinez, Chair

ATTEST:

_____
Daisy Zamora, PhD, Secretary/Treasurer

ORDINANCE NUMBER _____

AN ORDINANCE OF THE CITY OF BROWNSVILLE, TEXAS, AMENDING CHAPTER 102 "UTILITIES," ARTICLE III "RATES AND CHARGES," DIVISION 1. "GENERALLY," OF THE CODE OF ORDINANCES; AMENDING SECTION 102-81 "RESACA FEE" TO REDUCE THE RESACA FEE; PROVIDING FOR SEVERABILITY; AND PROVIDING FOR AN EFFECTIVE DATE.

WHEREAS, Article VI, Section 1 of the Home Rule Charter of the City of Brownsville, Texas, ("Charter") establishes the Public Utilities Board of the City of Brownsville, Texas ("Board" or "BPUB") as a separate and distinct agency of the City having absolute and complete authority and power with reference to the control, management and operation of the City's power and light, water and wastewater systems (the "System") and with reference to the expenditure and application of the revenues of the System, subject to the provisions of the article; and

WHEREAS, as part of the water and wastewater utility systems, BPUB maintains reservoirs and portions of the resaca systems in and around the City in order to, among other reasons, maintain raw water storage for the System; and

WHEREAS, Article VI, Section 4(b) of the Charter requires BPUB to periodically "review the rates, fees and charges for services rendered by the utilities system, ... and in the event such review reflects a necessity for the adjustment ... of such rates, fees and charges, then [BPUB] shall submit to the City Commission a report of the review, and the basis upon which the proposed adjustment is predicated, accompanied by a written request for approval and adoption of the rates, fees, and charges recommended by the Board"; and

WHEREAS, Article VI, Sec. 4(b) of the Charter further provides that the City Commission shall pass an ordinance placing in effect the rates, fees, and charges recommended by BPUB only if the City Commission approves the adjustment(s) thus recommended; and

WHEREAS, pursuant to Resolution No. 2022-03 l 4-(IC6), approved March 14, 2022, the Board found that adoption of a Resaca Fee and certain specified annual increases over a five-year period thereto was reasonable and necessary to effectuate the public purposes of recovering costs related to the maintenance and improvement of City resacas used and useful in supporting the water and wastewater utility systems under BPUB 's management and control; and

WHEREAS, pursuant to Ordinance No. 2022-1701, approved May 3, 2022, the City Commission found that said recommendation was reasonable and necessary for the public purpose of operating the City's water and wastewater systems and should be adopted in order to provide for the continued preservation of the public health, safety, and welfare of the people and added Section 102-81 to the City's Code of Ordinances, adopting a Resaca Fee of $4.50, effective June 1, 2022; of $6.25, effective January 1, 2023; a Resaca Fee of $10.00, effective January I, 2024; and a Resaca Fee of $12.00, effective January 1, 2026; and

WHEREAS, the USACE informed the City on April 3, 2026, of termination of the USACE Project after encountering significant administrative and operational challenges, including the City's unwillingness to acquire required real estate interests, which has prevented the City and USACE from executing a Project Partnership Agreement, thereby jeopardizing the project's viability, timely delivery, and ability to meet its intended objectives; and

WHEREAS, by Resolution No. _____, adopted on May 11, 2026, the Board determined that funds collected through the Resaca Fee should continue to be expended on the maintenance of and improvement to reservoirs and those portions of resacas most directly used for raw water storage that are used and useful in directly supporting the System, and that, as a result of the termination of the USACE Project and other recent developments, the Board recommends that the Resaca Fee should be reduced to $2.33 per water account; and

WHEREAS, the Board bases its request upon a sound evaluation consistent with applicable ratemaking standards, and upon recommendations of BPUB staff and consultants, which have been provided with the Board's recommendations; and

WHEREAS, the City Commission hereby finds that the recommendations of the Board are reasonable and necessary to ensure the efficient operation of the utility systems, keep such systems in operation, and render adequate service to the City and its inhabitants and, therefore, should be approved and adopted in order to provide for the continued preservation of the public health, safety, and welfare of the people;

NOW, THEREFORE, BE IT ORDAINED BY THE CITY COMMISSION OF THE CITY OF BROWNSVILLE, TEXAS:

Section 1. *Amendment to Chapter 102, Utilities, art. III, Rates and Charges.* Section 102-81, Resaca Fee, chapter 102 of the Code of Ordinances of the City of Brownsville, Texas is hereby amended to implement a fixed resaca fee of $2.33 and provide as follows:

> Sec. 102-81. Resaca Fee.
> A monthly resaca fee of $2.33 is applicable to a retail water customer.

Section 2. *Public Hearing*. A hearing for public input as to the fee adjustments set forth in Section 1 of this Ordinance will be held at 5:00 p.m., on _____, _____, 2026, in City Commission Chambers at City Hall.

Section 3. *Severability*. If any section, sentence, phrase, or clause of this Ordinance is declared by a Court of competent jurisdiction to be unconstitutional, invalid, or unenforceable, such declaration shall not be deemed to affect the remaining sections, sentences, phrases, or clauses of this Ordinance.

Section 4. *Effective Date*. This Ordinance shall become effective at 12:01 a.m., on the date of final approval upon second reading, as provided by the Charter of the City of Brownsville and the laws of the State of Texas.

PASSED and APPROVED following a Public Hearing on FIRST READING on the _____ day of _____, 2026.

PASSED and APPROVED on SECOND AND FINAL READING on the _____ day of _____, 2026.

_____
John Cowen, Jr.
Mayor

ATTEST:

_____
Mayra Rios
City Secretary

RESOLUTION No. 2026-XXX

A RESOLUTION APPROVING THE ELIMINATION OF THE RESACA FEE AND REQUESTING THE CITY COMMISSION TO AMEND CHAPTER 102 OF THE CODE OF ORDINANCES ENTITLED "UTILITIES" TO APPROVE THE ELIMINATION OF THE RESACA FEE

WHEREAS, Article VI, Section 1 of the Home Rule Charter of the City of Brownsville, Texas, ("Charter") establishes the Public Utilities Board of the City of Brownsville, Texas ("Board" or "BPUB") as a separate and distinct agency of the City having absolute and complete authority and power with reference to the control, management and operation of the City's power and light, water and wastewater systems (the "System") and with reference to the expenditure and application of the revenues of the System, subject to the provisions of the article; and

WHEREAS, Article VI, Section 4(b) of the Charter requires BPUB to periodically "review the rates, fees and charges for services rendered by the utilities system, ... and in the event such review reflects a necessity for the adjustment ... of such rates, fees and charges, then [BPUB] shall submit to the City Commission a report of the review, and the basis upon which the proposed adjustment is predicated, accompanied by a written request for approval and adoption of the rates, fees, and charges recommended by the Board"; and

WHEREAS, as part of the water and wastewater utility systems, BPUB maintains reservoirs and portions of the resaca systems in and around the City in order to, among other reasons, maintain raw water storage for the System; and

WHEREAS, in connection with said maintenance and improvement of resacas, City, as local sponsor, and BPUB collaborated with the U.S. Army Corps of Engineers ("USACE") to receive federal funding for the "Resacas In The Vicinity of The City of Brownsville, Texas, Ecosystem Restoration Project" (the "USACE Project"); and

WHEREAS, BPUB has also collaborated with the City to receive federal resaca maintenance and improvement funding through the U.S. Bureau of Reclamation ("BOR") under the Resources and Ecosystems Sustainability, Tourist Opportunities, and Revived Economies of the Gulf Coast States Act (the "RESTORE Act Project"); and

WHEREAS, in 2020 BPUB engaged an independent consulting and engineering firm, Willdan Group, Inc., to complete a study of the adequacy of water and wastewater rates, fees and charges (the "Rate Study") in light of customer growth, increased operating costs, the USACE Project and RESTORE Act Project and projected capital improvements required over the next decade, inclusive of potential options for recovery of existing and planned resaca-related costs, consistent with the Charter, City bond ordinances, and applicable law and ratemaking principles; and, which, upon completion, recommended adoption of a Resaca Fee to recover costs related to resaca maintenance and improvement programs, including options for phasing in these rates, fees, and charges; and

WHEREAS, BPUB staff reviewed the Rate Study and, based on thereon, recommended that the Board adopt a Resaca Fee to fund resaca maintenance programs, including dredging operations and non-federally funded portions of the USACE Project and the RESTORE Act Project; and

WHEREAS, pursuant to Resolution No. 2022-03 l 4-(IC6), approved March 14, 2022, the Board found that adoption of a Resaca Fee and certain specified annual increases over a five-year period thereto was reasonable and necessary to effectuate the public purposes of recovering costs related to the maintenance and improvement of City resacas used and useful in supporting the water and wastewater utility systems under BPUB 's management and control; and

WHEREAS, BPUB submitted the Rate Study and BPUB Resolution No. 2022-0314-(IC6) to the City Commission, thereby providing a written request for approval and adoption of the rates, fees and charges therein recommended by the Board; and

WHEREAS, pursuant to Ordinance No. 2022-1701, approved May 3, 2022, the City Commission found that said recommendation was reasonable and necessary for the public purpose of operating the City's water and wastewater systems and should be adopted in order to provide for the continued preservation of the public health, safety, and welfare of the people and added Section 102-81 to the City's Code of Ordinances, adopting a Resaca Fee of $4.50, effective June 1, 2022; of $6.25, effective January 1, 2023; a Resaca Fee of $10.00, effective January I, 2024; and a Resaca Fee of $12.00, effective January 1, 2026; and

WHEREAS, after reviewing concerns raised by the City Commission in April 2023 regarding the Resaca Fee, and in light of delays in implementation of the USACE Project, BPUB determined that the existing fee of $6.25 was adequate to support ongoing resaca restoration activities and, at its September 11, 2023 meeting, the Board recommended that the Resaca Fee not be increased on January 1, 2024, and January 1, 2026, as contemplated by Ordinance No. 2022-1701, and, pursuant to City Ordinance No. 2023-1701-A, approved November 13, 2023, the City Commission amended Section 102-81 of the Code of Ordinances, preserving the Resaca Fee at $6.25; and

WHEREAS, BPUB applied for and was awarded a $3,000,000 grant on September 12, 2025, from the BOR's WaterSMART program for a $4,554,700 ecosystem restoration on a portion of Resaca de la Guerra, expected to be completed in 2027; and

WHEREAS, the USACE informed the City on April 3, 2026, of termination of the USACE Project after encountering significant administrative and operational challenges, including the City's unwillingness to acquire required real estate interests, which has prevented the City and USACE from executing a Project Partnership Agreement, thereby jeopardizing the project's viability, timely delivery, and ability to meet its intended objectives; and

WHEREAS, the Rate Study included the funding of the City's local share of the USACE Project as a component of anticipated costs, however, the Board has continued to perform dredging operations, completing all projects associated with the RESTORE Act, and is currently conducting a restoration project partially funded by the BOR's WaterSMART program, and, as of March 31, 2026, the Board has a balance of $9,086,616.66 in funds collected from the Resaca Fee for continued and ongoing operations; and

WHEREAS, the staff of BPUB has informed the Board that remaining funds collected through the Resaca Fee can and should be expended on the maintenance of and improvement to reservoirs and those portions of resacas most directly used for raw water storage that are used and useful in directly supporting the System until such funds are depleted, and that BPUB staff will incorporate the reasonable and necessary dredging costs into a future cost-of-service study and intends to recover such costs through water rates in the future as part of raw water supply operations; and

WHEREAS, the Board has reviewed the recommended changes to eliminate the Resaca Fee and has determined that the recommendations are based upon a sound evaluation consistent with applicable ratemaking standards and are in the public interest of the Board's utility customers;

NOW, THEREFORE, BE IT RESOLVED BY THE PUBLIC UTILITIES BOARD OF THE CITY OF BROWNSVILLE, TEXAS:

1. The foregoing recitals contained in this Resolution are incorporated herein by reference and adopted in their entirety as findings of fact and determinations of the Public Utilities Board of the City of Brownsville, and the Board relies upon such recitals in approving and authorizing the actions contemplated hereby.

2. The Board finds that the elimination of the Resaca Fee is reasonable and necessary for the public purpose of operating the water and wastewater systems, to wit:

A. That the General Manager & Chief Executive Officer, or her delegee, submit immediately the Board's recommendation to amend Section 102-81 of the Code of Ordinances to the City Commission of the City of Brownsville, Texas, to eliminate the Resaca Fee, together with a copy of this Resolution and a draft ordinance to reflect the requested amendments to Section 102-81 of the Code of Ordinances.

B. That BPUB continue to expend funds under the Resaca Fee to-date continue to support dredging, the RESTORE Act Program, and other programs related to the maintenance and improvement of BPUB's reservoirs and those portions of the resaca system most useful to the System's raw water storage and related uses.

C. That BPUB staff engage appropriate consultants to review water and wastewater rates, fees and charges.

3. By this Resolution the Board requests in writing that the City Commission approve and adopt the elimination of the Resaca Fee recommended by passing an appropriate ordinance placing such modification in effect.

Passed and approved this ___ day of _____ 2026.

_____
Gerardo Martinez, Chair

ATTEST:

_____
Daisy Zamora, PhD, Secretary/Treasurer

ORDINANCE NUMBER _____

AN ORDINANCE OF THE CITY OF BROWNSVILLE, TEXAS, AMENDING CHAPTER 102 "UTILITIES," ARTICLE III "RATES AND CHARGES," OF THE CODE OF ORDINANCES; REPEALING SECTION 102-81 "RESACA FEE" TO ELIMINATE THE RESACA FEE; PROVIDING FOR SEVERABILITY; AND PROVIDING FOR AN EFFECTIVE DATE.

WHEREAS, Article VI, Section 1 of the Home Rule Charter of the City of Brownsville, Texas, ("Charter") establishes the Public Utilities Board of the City of Brownsville, Texas ("Board" or "BPUB") as a separate and distinct agency of the City having absolute and complete authority and power with reference to the control, management and operation of the City's power and light, water and wastewater systems (the "System") and with reference to the expenditure and application of the revenues of the System, subject to the provisions of the article; and

WHEREAS, as part of the water and wastewater utility systems, BPUB maintains reservoirs and portions of the resaca systems in and around the City in order to, among other reasons, maintain raw water storage for the System; and

WHEREAS, Article VI, Section 4(b) of the Charter requires BPUB to periodically "review the rates, fees and charges for services rendered by the utilities system, ... and in the event such review
reflects a necessity for the adjustment ... of such rates, fees and charges, then [BPUB] shall submit to the City Commission a report of the review, and the basis upon which the proposed adjustment is predicated, accompanied by a written request for approval and adoption of the rates, fees, and charges recommended by the Board"; and

WHEREAS, Article VI, Sec. 4(b) of the Charter further provides that the City Commission shall pass an ordinance placing in effect the rates, fees, and charges recommended by BPUB only if the City Commission approves the adjustment(s) thus recommended; and

WHEREAS, on April 3, 2026, the U.S. Army Corps of Engineers (USACE) informed the City of the termination of the "Resacas In The Vicinity of The City of Brownsville, Texas, Ecosystem Restoration Project," a project for which the City was local sponsor and for which BPUB was to collect the anticipated local share through Resaca Fee revenue to finance the City's share of project expenses; and

WHEREAS, by Resolution No. _____, adopted on May 11, 2026, the Board determined that funds collected to-date through the Resaca Fee will continue to be expended on the maintenance of and improvement to reservoirs and those portions of resacas most directly used for raw water storage that are used and useful in directly supporting the System, and that the Board recommends that the Resaca Fee should be eliminated until such funds are diminished and another water rates study performed; and

WHEREAS, the Board bases its request upon a sound evaluation consistent with applicable ratemaking standards, and upon recommendations of BPUB staff and consultants, which have been provide with the Board's recommendations; and

WHEREAS, the City Commission hereby finds that the recommendation of the Board is reasonable and necessary to ensure the efficient operation of the utility systems, keep such systems in operation, and render adequate service to the City and its inhabitants and, therefore, should be approved and adopted in order to provide for the continued preservation of the public health, safety, and welfare of the people;

NOW, THEREFORE, BE IT ORDAINED BY THE CITY COMNISSION OF THE CITY OF BROWNSVILLE, TEXAS:

Section 1. *Amendment to Chapter 102, Utilities; Article III, Rates and Charges*; Section 102-81, Resaca Fee, is hereby repealed and eliminated.

Section 2. *Public Hearing*. A hearing for public input as to the elimination of the Resaca Fee set forth in Section 1 of this Ordinance will be held at 5:00 p.m., on _____, _____, 2026, in City Commission Chambers at City Hall.

Section 3. *Severability*. If any section, sentence, phrase, or clause of this Ordinance is declared by a Court of competent jurisdiction to be unconstitutional, invalid, or unenforceable, such declaration shall not be deemed to affect the remaining sections, sentences, phrases, or clauses of this Ordinance.

Section 4. *Effective Date*. This Ordinance shall become effective at 12:01 a.m. on the date of final approval upon second reading, as provided by the charter of the City of Brownsville and the laws of the State of Texas.

PASSED and APPROVED following a Public Hearing on FIRST READING on the _____ day of _____, 2026.

PASSED and APPROVED on SECOND AND FINAL READING on the _____ day of _____, 2026.

_____
John Cowen, Jr.
Mayor

ATTEST:

_____
Mayra Rios
City Secretary

BROWNSVILLE
PUBLIC UTILITIES BOARD

Resaca Fee and Operations

POLICY DISCUSSIONS

BOARD OF DIRECTORS MEETING | December 8, 2025

Mark Dombroski

Assistant General Manager and Chief Operating Officer

Operations

BPUB Board of Directors Workshop, December 8, 2025:

At the July 7, 2025, Board of Directors meeting, the Board requested a Resaca Workshop before the full Board.

- Summary of Prior Meetings
- Current Fee Usage
  - Summarize how Resaca fees are being used and the impact of current operations.
- Future Governance Options
  - BPUB continues Resaca Operations.
  - City assumes Resaca Operations.
  - District or authority created for Resaca Operations.
- BPUB-Led Strategy
  - Outline a high-level plan for BPUB's future Resaca Operations.
- Board Discussions on Resaca Fee and Operations

Timeline of Resaca Operations

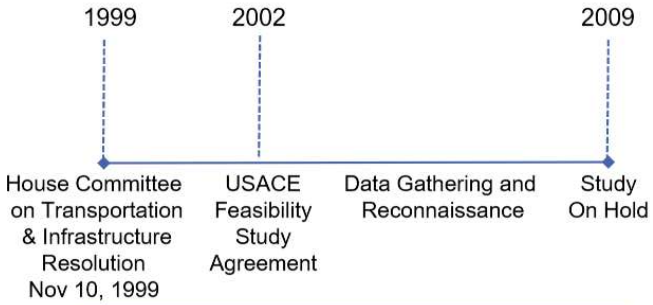

In the late 1990s, BPUB identified dredging of the Resacas as essential to increasing raw-water storage. BPUB approached the USACE, which regulates dredging in navigable waters. Although USACE lacked a dedicated dredging grant program, it had ecosystem restoration authorities with available funding. This alignment provided the connection between BPUB's raw-water storage needs and the broader Resaca ecosystem restoration initiative.

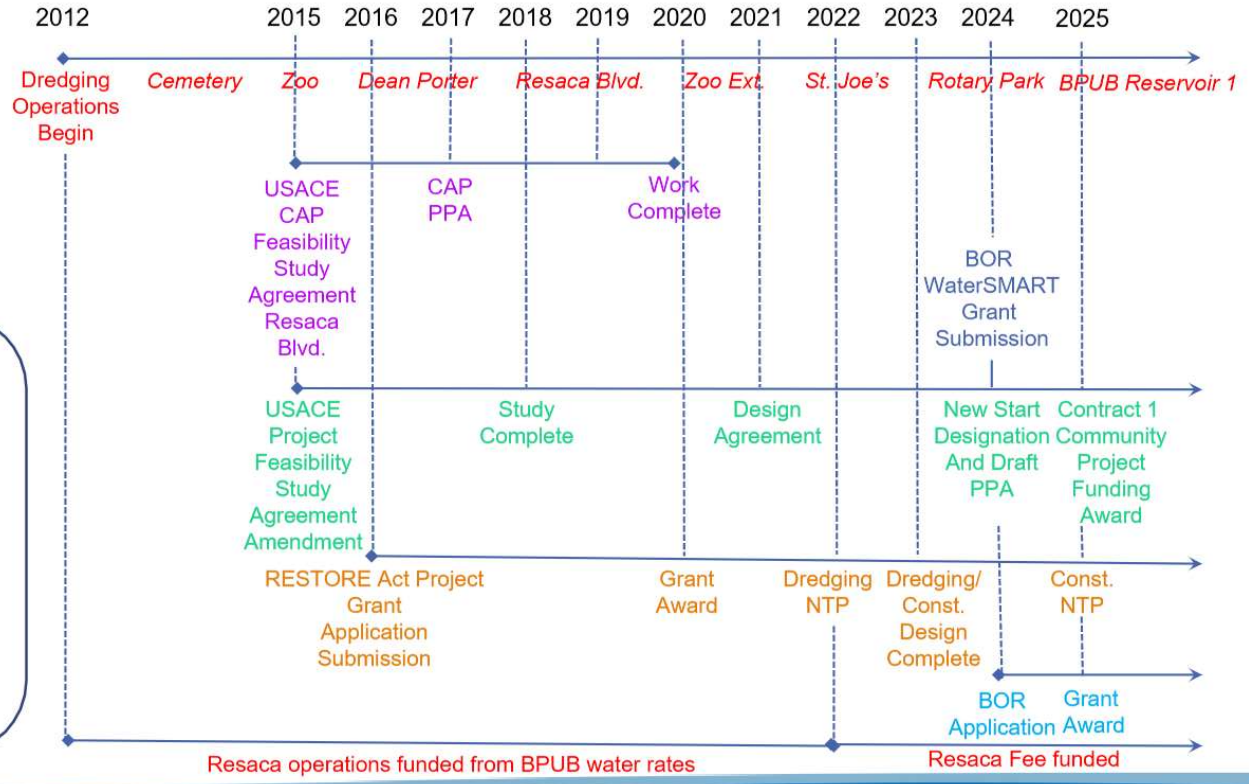

Summary of Prior Meetings

BROWNSVILLE
PUBLIC UTILITIES BOARD

RESACA OPERATIONS: POLICY DISCUSSIONS

Joint Brownsville City Staff / BPUB Staff meeting on November 15, 2024:

At the September 9, 2024, Board of Directors meeting, the General Manager and CEO was directed to have:

"*BPUB staff to discuss and work with the City on a plan of action regarding the future of Resaca operations and the Resaca Fee and to report back to the Board.*"

- Does the City and BPUB want to reduce or eliminate the Resaca Fee?
  - City staff were evaluating the development of a drainage utility and planning a cost-of-service study. City staff considered the completion of that work and a decision by the City Commission on it as a prerequisite to discussions on the Resaca Fees.
- What BPUB operations should be eliminated if funding is reduced?
  - No agreement was reached on discontinuing any BPUB operations related to the Resacas.
- What Resaca operations does the City want to accept, if any?
  - The City did not agree to accept any Resaca operations.
- What additional information does the City need from BPUB?
  - The City did not request any additional information.
- What is our timeline for decisions and actions?
  - The City anticipated completing the cost of service study and adopting a Drainage Utility ordinance by October 2025, with possible Drainage Fees implemented in January 2026.

Joint Brownsville City Commission / BPUB Board of Directors meeting on December 10, 2024:

These Resaca policy considerations were discussed during the Joint meeting. The consensus was to maintain current Resaca responsibilities, with the City taking the lead on USACE contract discussions. The Resaca Fee would remain at its current level at least until the City completes the proposed drainage utility cost of service study, expected in October 2025.

Policy Considerations Presented:

- BPUB will continue dredging portions of the Resaca De La Guerra and its reservoirs necessary for raw water storage capacity.
- Which agency, if any, will be tasked with the following Resaca Operations:
  - Dredging of Town Resaca, downstream portions of Resaca De La Guerra, and Resaca del Rancho Viejo.
  - Pumping water from the Rio Grande into Town Resaca and its adjacent bancos and maintaining water levels.
  - Purchasing raw water from irrigation districts to provide water to Resaca Del Rancho Viejo and its adjacent bancos and maintaining water levels.
  - Coordination on flood control operations with other agencies for non-COB Resacas.
  - Pursuing and managing grants to restore Resacas and the flood control aspects of Resacas.
- Will COB pursue the USACE Project Contract 1 and future contracts?
- Should the Resaca Fee be reduced or eliminated?

BPUB Board of Directors meeting on April 14, 2025:

Following discussions with the City about its ongoing sponsorship of the USACE project and the potential adoption of a drainage improvement and flood control program, which includes a new City drainage fee, BPUB presented the Board of Directors with five options to consider. No action was taken at the meeting.

Comparison Matrix of Dredging and Project Funding Options

Feature	Option A	Option B	Option C	Option D	Option E
Continue ongoing dredging	✓	✓	✓	✓	✗
Complete RESTORE Phase 1	✓	✓	✓	✓	✗
Apply for RESTORE Phases 2–4	✗	✓	✓	✓	✗
Complete USACE Project 1	✓	✓	✓	✓	✗
Apply for USACE Projects 2–16	✗	✗	✓	✓	✗
Fund BOR matching requirements	✓	✓	35% Match ✓	10% Match ✓	✗
Eliminate Resaca fee	✗	✗	✗	✗	✓
Incorporate in-house dredging into water rates	✗	✗	✗	✗	✓
Projected Resaca Fee	**$1.67**	**$2.77**	**$14.86**	**$6.22**	**$0.00**

BROWNSVILLE
PUBLIC UTILITIES BOARD

Current Fee Usage

BROWNSVILLE
PUBLIC UTILITIES BOARD

RESACA OPERATIONS: POLICY DISCUSSIONS

Overview of Organizations: Raw Water Supply Function and Responsibilities

BPUB is responsible for approximately 39.5% of the Resacas in Brownsville.

Enlarged handouts of maps will be provided during the Workshop.

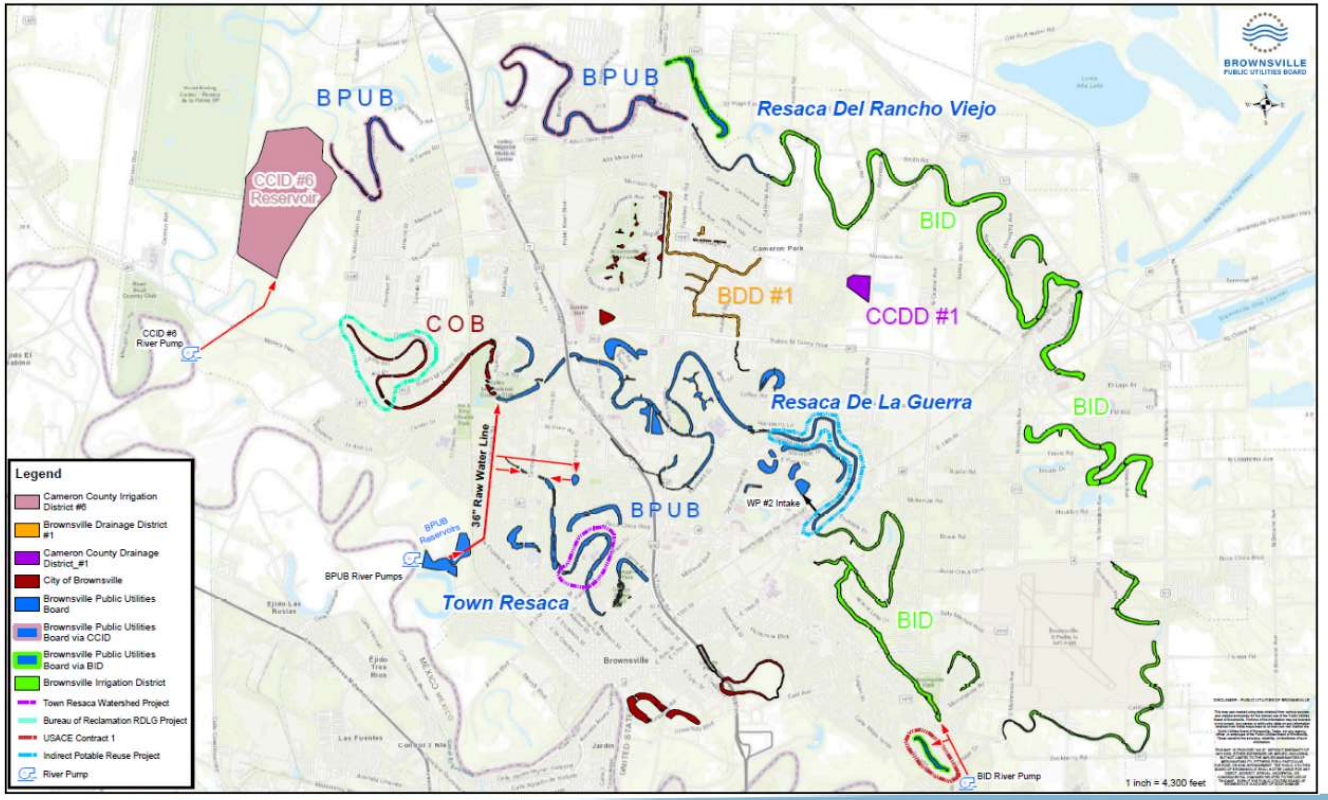

Overview of BPUB Resaca Functions

1. Divert and store raw water from the Rio Grande through Resaca de la Guerra and into Water Treatment Plant 2 using weirs and pumps.
2. Conduct dredging operations in portions of Resaca de la Guerra and reservoirs to increase raw water storage capacity.
3. Conduct dredging operations in Resaca de la Guerra, Town Resaca, and Resaca Del Rancho Viejo to improve water circulation, control flood conditions, enhance water quality, and support ecological improvements.
4. Pump water from the Rio Grande into Town Resaca and its adjacent bancos and maintain water levels for ecological and community benefit.
5. Purchasing raw water from irrigation districts to provide water to Resaca Del Rancho Viejo and its adjacent bancos, and maintaining water levels for ecological and community benefit.
6. Coordination on flood control operations with other agencies.
7. Manage grant opportunities from State and Federal sources to support the Resaca Restoration Program.

Overview of BPUB Resaca Functions

- RESTORE Act Project[1]
  - Primary purpose is to mitigate flooding in the Town Resaca system.
  - Reimbursement from the Department of Treasury through the TCEQ.
  - Construction underway, expected completion by early 2026.

Elimination Option will then embed any remaining expenses into water rates

- U.S. Army Corps of Engineers (USACE) Contract 1
  - Primary purpose is for ecosystem restoration.
  - Congressional appropriation was awarded for Contract 1 (Pending Financial Assistance Agreement execution).
  - Constraints on fee simple and the 35% funding requirement are likely to be relaxed.
- Bureau of Reclamation WaterSMART
  - Primary purpose is for ecosystem restoration on Resaca de la Guerra.
  - Grant awarded September 12, 2025.
  - Halff and Associates is finalizing the 100% design, expected completion by Spring 2027.

Elimination Option will embed costs into water rates

[1]Resources and Ecosystems Sustainability, Tourist Opportunities, and Revived Economies of the Gulf Coast States Act of 2012

Services Not Provided by BPUB Resaca Operations

1. Removing trash and debris from Resaca's beyond the dredging operations.
2. Cutting or removal of vegetation on or in Resaca's beyond grant-funded restoration projects.
3. Adding water to Resacas (beyond those already identified).
4. Draining of Resacas for flood control.
5. Installing and maintaining drainage infrastructure improvements beyond grant-funded restoration projects (infrastructure is transferred to the City at completion of project).
6. Installing, owning, and maintaining surface aerators in Resacas.

Overview of Organizations: Resaca Maintenance

Elimination Option will be embed salaries of the staff in the blue boxes in water rates at a later date.

Senior Management Funded by W/WW rates.

3135-Resaca Maintenance Funded by Resaca Fee.

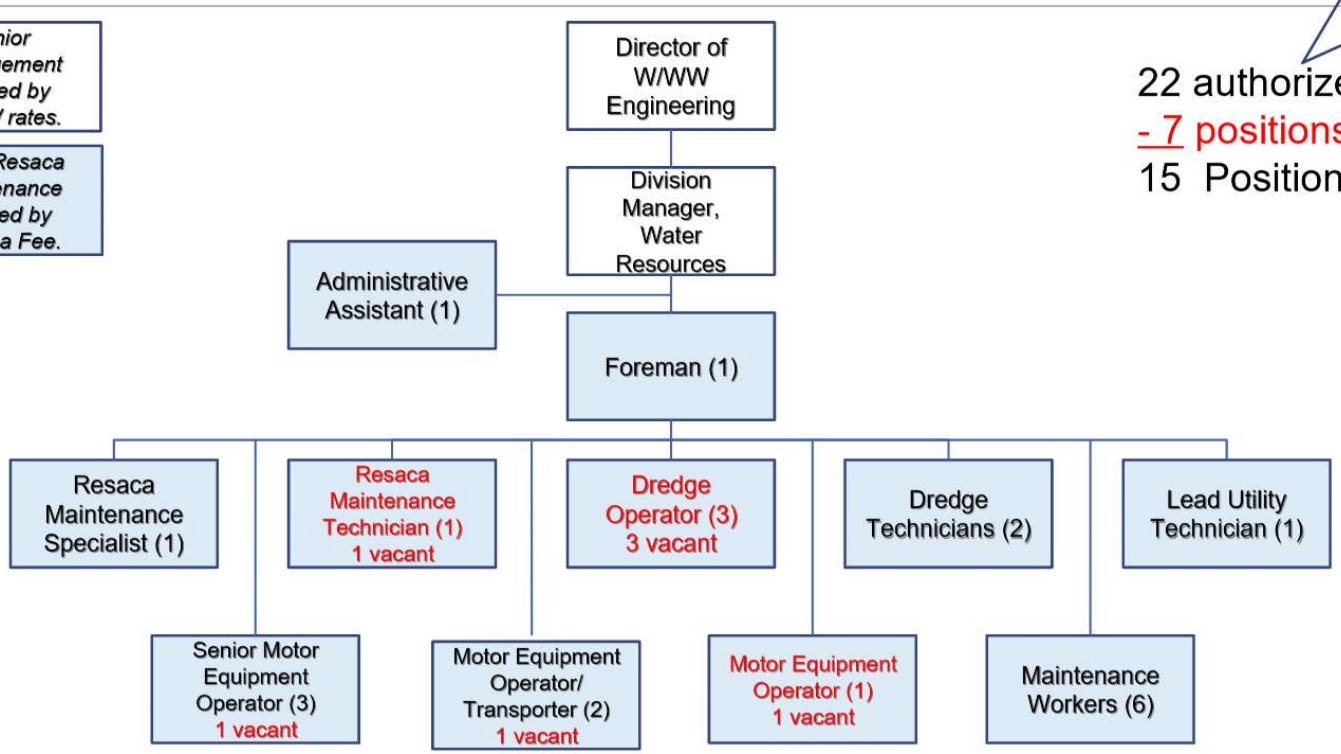

22 authorized full-time positions
- 7 positions held vacant
15 Positions filled

Previous Dewatering System: Capital Intensive

Current Dewatering System: O&M Intensive

Current Dredging Site:

Beginning in December 2024, BPUB piloted a project at the Water Plant No. 1 reservoir site to test the use of synthetic engineered dewatering bags to trap solids while filtering water to control sediment pollution effectively. The pilot was successful, and BPUB has adopted the new dewatering approach to Resaca dredging operations. BPUB is in the process of developing a fully operational site to complete the dredging at the Water Plant No. 1 reservoirs, followed by the Cromack resaca segments to improve raw water storage capability.

BROWNSVILLE PUBLIC UTILITIES BOARD

Resaca Workplan Progress

Location	Dredging	No. of Crews	Restoration	Comments
Cemetery	Completed 2013	1	Yes	Dredging, bank and infrastructure improvements
Dean Porter	Completed 2015	1	No	Dredging
Zoo	Completed 2016, 2019*	1	No	Dredging
Resaca Blvd.	Completed 2016	1	Yes	Dredging, USACE funded bank improvements
Parkland	Completed 2018	1	No	Dredging
Zoo Extension	Completed 2018, 2025*	2	No	Dredging
St. Joseph's	Completed 2023	2	Underway	Dredging, RESTORE Act Project funded restoration
Rotary Park	Completed 2024	2	Yes	Dredging, RESTORE Act Project funded restoration
BPUB Reservoir 1	Underway	1	No	Dredging
Cromack (RDLG)	*Planned 2027*	*1*	*No*	*Dredging*
Resaca de la Guerra	*Planned 2028*	*0*	*Yes*	*BOR Project funded restoration*
Resaca del Rancho Viejo	*Pending*	*TBD*	*Yes*	*Pending USACE Restoration project funding*

** Re-dredged segment as a final touch-up*

Funding for Resaca Operations: Resaca Maintenance Historical Spending

RESACA RESTORATION PROJECT - HISTORICAL SPENDING

	FY 2012	FY 2013	FY 2014	FY 2015	FY 2016	FY 2017	FY 2018	FY 2019	FY 2020	FY 2021	FY 2022	FY 2023	FY 2024	FY 2025 YTD JULY	GRAND TOTAL
O&M Personnel	83,684	613,262	846,766	946,093	775,703	468,672	549,608	552,042	537,842	574,848	402,636	260,784	922,803	838,130	8,372,872.78
O&M Non-Personnel	458,079	1,092,646	1,141,850	1,048,197	493,365	118,832	339,403	325,283	399,277	229,039	147,246	265,547	358,643	287,014	6,704,422
Capital Expenditures	3,201,959	3,390,692	38,876	37,554	141,509	113,873	37,847	33,625	198,653	-	137,216	270,904	154,251	287,000	8,043,960
Total O&M and Capital	**$ 3,743,722**	**$ 5,096,601**	**$ 2,027,493**	**$ 2,031,843**	**$ 1,410,577**	**$ 701,377**	**$ 926,858**	**$ 910,950**	**$ 1,135,773**	**$ 803,887**	**$ 687,098**	**$ 797,234**	**$ 1,435,697**	**$ 1,412,144**	**$ 23,121,254**
RESTORE Personnel	-	-	-	-	-	-	-	-	-	-	329,706	776,779	175,040	13,522	1,295,046
RESTORE Non-Personnel	-	-	-	-	-	-	-	-	-	36,390	159,711	640,909	95,403	718,751	1,651,164
RESTORE Capital Expenditures	-	-	-	-	-	-	-	-	-	-	6,679	-	-	-	6,679
RESTORE Reimbursement Total	**$ -**	**$ -**	**$ -**	**$ -**	**$ -**	**$ -**	**$ -**	**$ -**	**$ -**	**$ 36,390**	**$ 496,096**	**$ 1,417,688**	**$ 270,442**	**$ 732,273**	**$ 2,952,889**
Grand Total Resaca Expenses	**$ 3,743,722**	**$ 5,096,601**	**$ 2,027,493**	**$ 2,031,843**	**$ 1,410,577**	**$ 701,377**	**$ 926,858**	**$ 910,950**	**$ 1,135,773**	**$ 840,277**	**$ 1,183,194**	**$ 2,214,922**	**$ 1,706,139**	**$ 2,144,417**	**$ 26,074,143**

RESACA RESTORATION PROJECT - FEE REVENUE

	FY 2012	FY 2013	FY 2014	FY 2015	FY 2016	FY 2017	FY 2018	FY 2019	FY 2020	FY 2021	FY 2022	FY 2023	FY 2024	FY 2025 YTD JULY	GRAND TOTAL
Resaca Fees Collected	-	-	-	-	-	-	-	-	-	-	1,138,129	3,861,268	4,142,785	3,489,941	12,632,123
10% Transfer to City of Brownsville	-	-	-	-	-	-	-	-	-	-	113,813	386,127	414,279	348,994	1,263,212
Net Revenue Available to BPUB	**$ -**	**$ -**	**$ -**	**$ -**	**$ -**	**$ -**	**$ -**	**$ -**	**$ -**	**$ -**	**$ 1,024,316**	**$ 3,475,141**	**$ 3,728,507**	**$ 3,140,947**	**$ 11,368,911**
Expenses Covered by Resaca Fee	-	-	-	-	-	-	-	-	-	-	-	(450,320)	(1,260,607)	(1,117,135)	(2,828,062)
Net Resaca Fees Available	**$ -**	**$ -**	**$ -**	**$ -**	**$ -**	**$ -**	**$ -**	**$ -**	**$ -**	**$ -**	**$ 1,024,316**	**$ 3,024,821**	**$ 2,467,900**	**$ 2,023,812**	**$ 8,540,849**

Funding for Resaca Operations: Resaca Maintenance Historical Spending

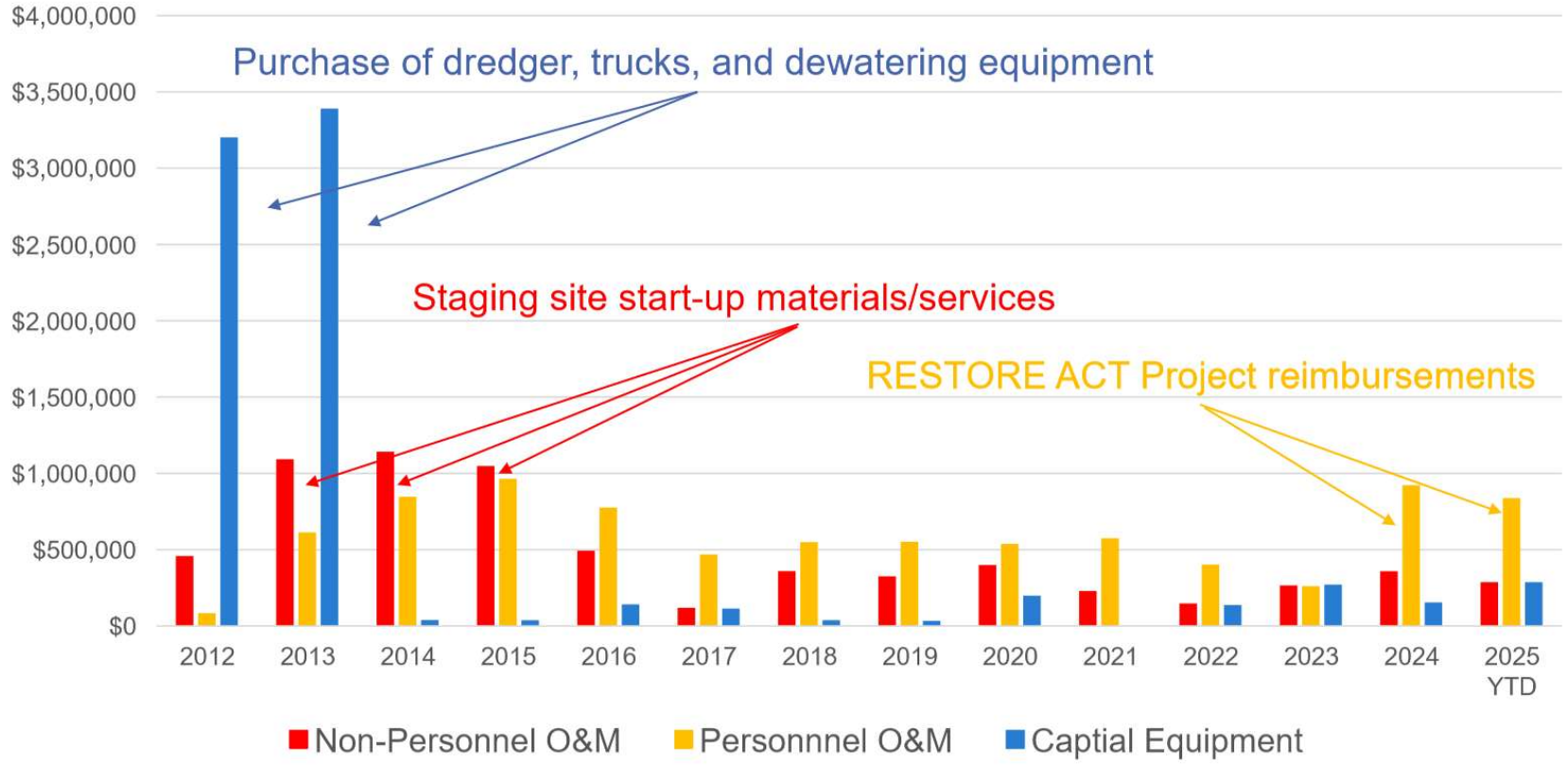

Funding for Resaca Operations: 2022 Cost of Service Study

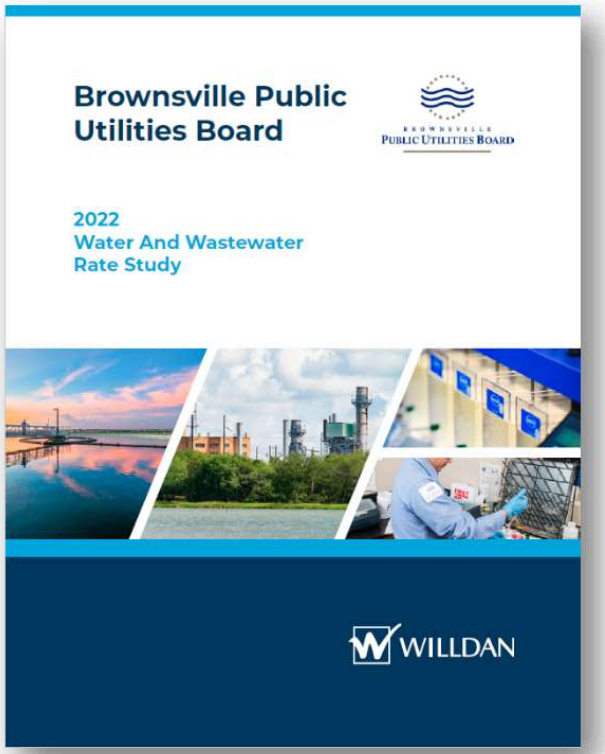

- 2022 Cost of Service Study proposed rates for 5 years, 2023-2027.
- Adopted on May 3, 2022, and became effective June 1, 2022.
- Created a separate Resaca Fee using water accounts as the billing determinant.
- Recovered in the fee include Resaca maintenance, Capital Outlays, RESTORE Act project, and USACE Project costs.

Funding for Resaca Operations: 2022 Cost of Service Study

2022 Water and Wastewater Rate Study included the recovery of four distinct items within the Resaca Cost of Service:

1. Resaca O&M expenses
2. Resaca Capital Outlays
3. RESTORE Contribution
4. USACE Contribution

Expenditures of funds collected under the Resaca Fee are limited to these purposes.

Table IV-2

BROWNSVILLE PUBLIC UTILITIES BOARD
FORECAST RESACA COST OF SERVICE
SCENARIO IIA, IIB

	2023	2024	2025	2026	2027
Resaca O&M Expense					
3135 Resaca Maintenance	$ 1,914,691	$ 2,015,890	$ 2,123,292	$ 2,237,313	$ 2,358,399
3145/3225 Allocated Expenses	(1,665,191)	(1,757,201)	(1,855,031)	(1,959,078)	(2,069,708)
Total O&M Expenses	249,500	258,689	268,261	278,234	288,691
Capital Outlays	830,000	830,000	830,000	830,000	830,000
Debt Service	-	-	-	-	-
Sub-Total	1,079,500	1,088,689	1,098,261	1,108,234	1,118,691
RESTORE Contribution by PUB	-	534,502	534,502	875,000	875,000
USACE Contribution by PUB	2,640,400	4,847,850	154,350	6,483,400	6,154,400
Total Cost of Service	3,719,900	6,471,041	1,787,113	8,466,634	8,148,091
Less RESTORE Grant	-	-	-	-	-
Net Funded by Resaca Fee	**$ 3,719,900**	**$ 6,471,041**	**$ 1,787,113**	**$ 8,466,634**	**$ 8,148,091**

2022 Water and Wastewater Rate Study – Final, Willdan, page 55.

Funding for Resaca Operations: Adoption of the Resaca Fee

WHEREAS, the Public Utilities Board initially presented attachments to a draft ordinance, Ordinance No. 2022-1701, that provided acceptable options for implementing the rate plans for water and wastewater rates and for setting the amount of resaca fee, and, upon conclusion of the Public Hearing, on April 19, 2022, the City Commission, by unanimous vote, approved the nonlevelized rate plan and the resaca fee that fully leverages grants available under the RESTORE Act and ongoing resaca programs involving the United States Army Corps of Engineers.

City of Brownsville, Ordinance 2022-1701

2. That, upon review, the Board finds that creation of a resaca charge is reasonable and necessary to effectuate the public purpose of recovering costs related to the maintenance of and improvement to resacas used and useful in directly supporting the systems under the Board's management and control, without expressing a preference as to whether the monthly amount of the resaca charge collected address only the maintenance and improvement costs that support the RESTORE Project ($2.50/monthly per water customer), or whether the resaca charge also include costs associated with the USACE Program that vary based upon progress and participation levels in the USACE Program, such options depicted as follows:

Resaca Charge
(Monthly charge to Water Customers)

Resaca Charge includes	Effective upon Adoption	Effective Jan. 2023	Effective Jan. 2024	Effective Jan. 2025	Effective Jan. 2026
RESTORE	$2.50	(no change)	(no change)	(no change)	(no change)
RESTORE and USACE	$4.50	$6.25	$10.00	$10.00	$12.50

Resaca Fee funds must be expended on BPUB systems.

Brownsville Public Utilities Board, Resolution 2022-0314-(IC6)

Funding for Resaca Operations: Resaca Fee History

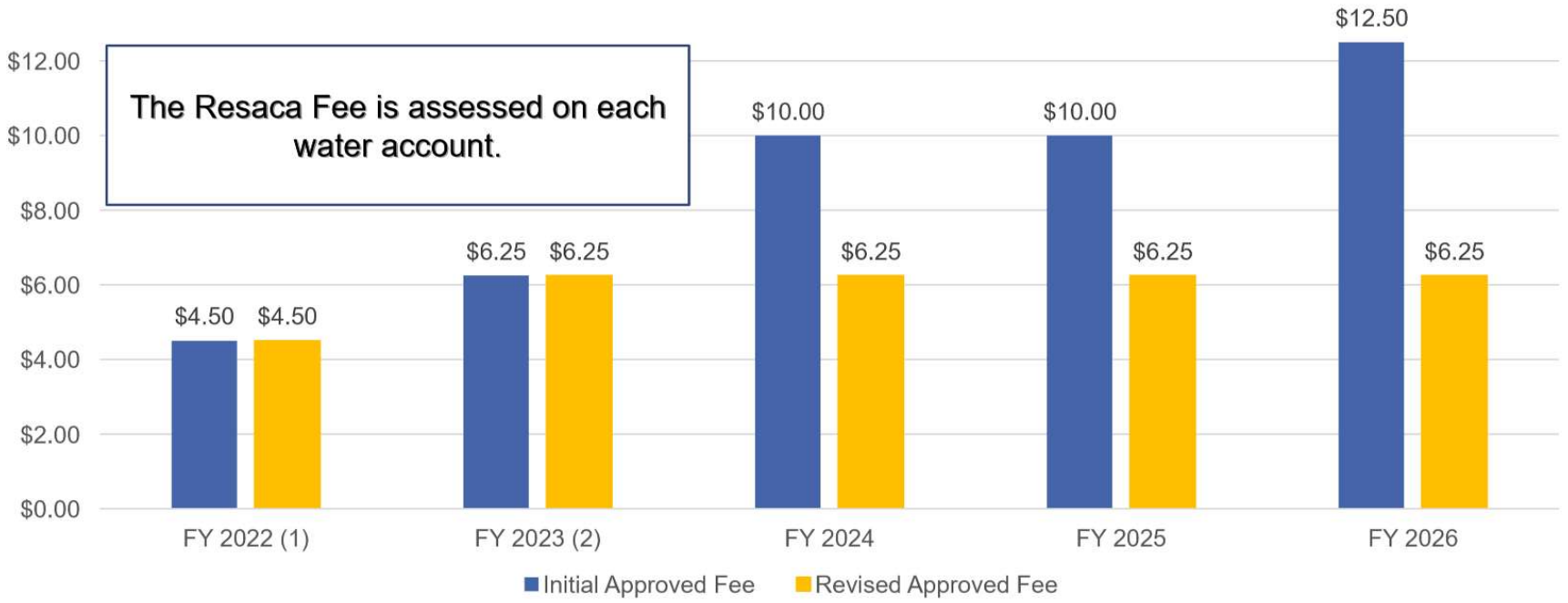

(1) BPUB began assessing the Resaca Fee in June 2022
(2) BPUB recommended, and City Commission approved, holding the Resaca Fee at $6.25 until an updated cost of service study is completed.

Resaca Fee Options: Updated from April 2025 Presentation

Options	BPUB Dredging Operations	RESTORE			US Army of Corps Engineers				BOR $3M Grant	Annual Costs w/USACE proj 1 and BOR pd with existing funds	Projected Resaca Fee
	Including Reuse	Current Appropriation	Future Appropriation	Match %	Project 1	Project 2 - 16	Match %	Real Estate	Local Share		
A	Yes	Yes	No	0%	Yes	No	35%	Fee Simple	Yes		
	$ 1,400,000	$ -	$ -		$1,085,864				$ 1,654,700	$ 1,400,000	$ 2.33
B	Yes	Yes	Yes	12.5%	Yes	No	35%	Fee Simple	Yes		
	$ 1,400,000	$ -	$ 660,714		$1,085,864				$ 1,654,700	$ 2,060,714	$ 3.43
C	Yes	Yes	Yes	12.5%	Yes	Yes	35%	Fee Simple	Yes		
	$ 1,400,000	$ -	$ 660,714		$1,085,864	$ 7,256,667			$ 1,654,700	$ 9,317,381	$ 15.53
D	Yes	Yes	Yes	12.5%	Yes	Yes	10%	No Fee Simple	Yes		
	$ 1,400,000	$ -	$ 660,714		$1,085,864	$ 2,073,333		(note 1)	$ 1,654,700	$ 4,134,048	$ 6.89
E	Yes	No	No	NA	No	No	NA	NA	No		
	$ 1,400,000	$ -	$ -		$ -	$ -			$ -	$ 1,400,000	$ -

Option A Reduction to New Rate of $2.33

Assumptions:

RESTORE Phase 1 final contract for bank improvements is fully covered by the grant
RESTORE Phases 2 - 4 at $37M over 7 years with 12.5% local match
USACE remaining projects 2 to 16 estimated at local match on $311M overall project and averaged over 15 years
Option E would be to eliminate the Resaca fee and incorporate in-house dredging in water base rates

Note 1 USACE is developing a Non-Standard Estate for potential use with ecological restoration projects, expected to be published in February 2026; any reduction in the local sponsor match requires congressional action

Future Governance Options

BROWNSVILLE
PUBLIC UTILITIES BOARD

RESACA OPERATIONS: POLICY DISCUSSIONS

Continued BPUB Resaca Operations

Pros:

- **Operational Experience**: BPUB has been performing dredging since 2012, giving it a stronger technical foundation to oversee dredging projects. There is some overlap in the BPUB requirement for raw water storage.
- **Grant Management Track Record**: BPUB already manages state/federal grants (TWDB, BOR, WaterSMART), giving it institutional credibility for securing and administering funding.
- **Financial Basis**: Resaca Fee established to fund operations.
- **Financial Controls**: Enterprise accounting for cost recovery may ensure better fiscal oversight than a general fund approach.

Cons:

- **Mission Creep**: Resaca Operations is not a function of BPUB per the Code of Ordinances. Resaca restoration could be viewed as peripheral and strain organizational focus.
- **Public Perception**: Customers may question why BPUB is funding non-core activities, even if supported by grants. Lack of a nexus between Resaca Fees on water customers and operations on Resacas not used from raw water storage.
- **Staff Resource Constraints**: Specialized environmental restoration may stretch BPUB's internal staff capacity compared to the City's parks or environmental departments.
- **Accountability Ambiguity**: Residents may expect broader city leadership on ecological/park assets rather than a utility authority.

City Performs Resaca Operations

Pros:

- **Mission Alignment**: Resaca Operations have a close alignment with City roles in stormwater and environmental management, parks and recreation, and the City's broad police powers to regulate public health, safety, and welfare.
- **Public Transparency**: City governance may provide more direct public engagement and accountability through elected officials.
- **Community Integration**: Restoration projects can be integrated into broader city goals like tourism, downtown revitalization, flood mitigation, and sustainability plans.
- **Grant Eligibility**: Certain environmental and parks grants may favor municipalities over utilities, potentially broadening funding access.
- **Building Experience**: The City is currently dredging the Los Tomates section of the Town Resaca for stormwater management.

Cons:

- **Separation from Existing Funding**: Current $8.4M Resaca Fee Fund balance can't be transferred outside BPUB.
- **Reduced Technical Depth**: The City may lack the same engineering, hydrology, and water infrastructure expertise as BPUB, requiring consultant support and new staff hires.
- **Funding Pressure**: Dredging and restoration costs could compete with other city priorities (public safety, streets, housing), risking underfunding.

Summary of Rights and Responsibilities for Resacas

Stakeholder	Governance	Ownership Rights	Responsibilities
Private Landowner	Texas property law	Owns land beneath Resaca; may use it consistently with the law.	Maintain property (erosion, litter, vegetation) unless assumed by easement/contract.
City of Brownsville	Texas Local Government Code and City Charter	Police power; drainage; parks authority.	Flood control, drainage, public health and safety, and parkland maintenance.
BPUB	City Charter	Operational and control authority over water/wastewater/electric utilities.	Maintain systems for water supply and wastewater functions.
State of Texas	Texas Water Code	Owns surface water; allocates use rights.	Regulate water rights and enforce water quality standards.
Federal Government	Clean Water Act and the Rivers and Harbors Act	Navigation and commerce regulation.	Oversight of dredging, filling, and discharge activities.

Alternatives for Governance

Feature	Drainage District	Water Control & Improvement District (WCID)	Special-Law "Resaca Authority"
Legal Basis	Texas Water Code Ch. 56; Tex. Const. Art. XVI §59	Texas Water Code Ch. 51 & Ch. 49; Tex. Const. Art. III §52 & Art. XVI §59	Special Act of Texas Legislature; Tex. Const. Art. XVI §59
Primary Purpose	Drainage, flood control, overflow prevention, maintenance of canals/ditches	Broad powers: water supply, drainage, flood control, wastewater, limited recreation	Tailored to local needs: flood/drainage + water quality + recreation/parks + beautification
Governance	Board elected locally; under TCEQ/Commissioners Court oversight	Elected Board; TCEQ oversight; coordination with City if inside limits	Legislature defines structure; can create board with appointed & elected seats
Funding Tools	Ad valorem tax (voter approved); bonds; assessments	Ad valorem tax (voter approved); bonds; fees; service charges	Whatever Legislature authorizes: taxes, assessments, fees, grants, partnerships
Geographic Scope	Can be county-wide or smaller; flexible boundary definition	Boundaries defined at creation; can cross city limits with consent	Defined by statute (e.g., City of Brownsville & Resaca system footprint)
Advantages	**Lowest-barrier option if the focus is flood control and basic maintenance**	**Best if Brownsville wants a utility-like entity with taxing authority and integration into water/drainage systems**	**Best if the vision includes flood control plus recreation, water quality, and tourism, but requires state legislation**

BPUB-Led Strategy

BROWNSVILLE
PUBLIC UTILITIES BOARD

RESACA OPERATIONS: POLICY DISCUSSIONS

BPUB Authority and Power

A BPUB-led strategy for future Resaca Operations is based on BPUB's stated authority and power, as outlined in the City Charter. The approach focuses on the operations of the water system.

Brownsville City Charter

Article VI. – Utilities Board

Section 1. – Management

(a) There is hereby created and established as a separate and distinct agency of the City of Brownsville, Texas, a Board to be known as the "Public Utilities Board of the City of Brownsville, Texas." Said Board is hereinafter referred to as the "Utilities Board," or, more simply, the "Board." Except as otherwise provided in this article, the Utilities Board shall have absolute and compete authority and power with reference to the control, management and operation of the power and light, water and sewage systems owned by the City of Brownsville, Texas, and the expenditure and application of the revenues of the systems, subject to the provisions contained herein, all of which shall be binding upon and shall govern the Utilities Board.

Proposed Position Statement

The BPUB Board of Directors is committed to the efficient, environmentally responsible, affordable, and transparent operation of Brownsville's electric, water, and wastewater systems for the benefit of our community. We support a collaborative, community-wide initiative to restore and preserve the unique Resaca system of the Rio Grande Valley. In partnership with the federal agencies, State of Texas, Cameron County, City of Brownsville, neighboring cities, local districts, and nonprofit organizations, we are dedicated to exploring and supporting the establishment of a dedicated entity—equipped with the authority and resources—to lead the long-term restoration and stewardship of this vital natural resource, in alignment with the values and priorities of our community.

Key Provisions for a BPUB-Led Strategy

A BPUB-led strategy for future Resaca operations would complete all grant-funded restoration projects, continue delivering water to the Resacas, support water-level management during storm events, and enhance BPUB's raw-water storage capabilities.

- Eliminate the Resaca Fee.
- Complete the RESTORE Act and WaterSMART projects.
- Reserve the funding for USACE Contract 1 project.
- Limit dredging operations to areas used for raw water storage.
- Continue all other Resaca related functions.
- Utilize existing Resaca Fee balance for BPUB dredging operations until funds are exhausted.
- Adjust water rates in a future cost of service study to recover the costs of dredging operations, once the Resaca Fee balance is exhausted.
- Provide subject matter expertise and, data, and assist in the development of a dedicated entity to lead the long-term restoration and stewardship of the Resaca system.

Resaca Fee Projection for a BPUB-Led Strategy

		Amount	Balance
Actual Resaca Fund balance for July 31, 2025			$8,540,849
Projected net Resaca Fees and expenses for August through March 2026		$1,638,625	
Projected Resaca Fund balance for December 31, 2025			$10,179,474
Reserved for BOR WaterSmart Grant matching share		($1,654,700)	
Reserved for USACE Contract 1 matching share		($1,085,864)	
	Adjusted Balance		$7,438,910
Capital equipment for FY 2025-2026		($1,695,121)	
	Adjusted Balance		$5,743,789
Estimated annual O&M for Resaca Operations		($1,360,381)	
Number of years funding available for Resaca Operations		(4.2)	
Projected Resaca Fund balance for May 20, 2030			$0

Board Discussions on Resaca Fee and Operations

BROWNSVILLE
PUBLIC UTILITIES BOARD

RESACA OPERATIONS: POLICY DISCUSSIONS

Board Decision Diagram

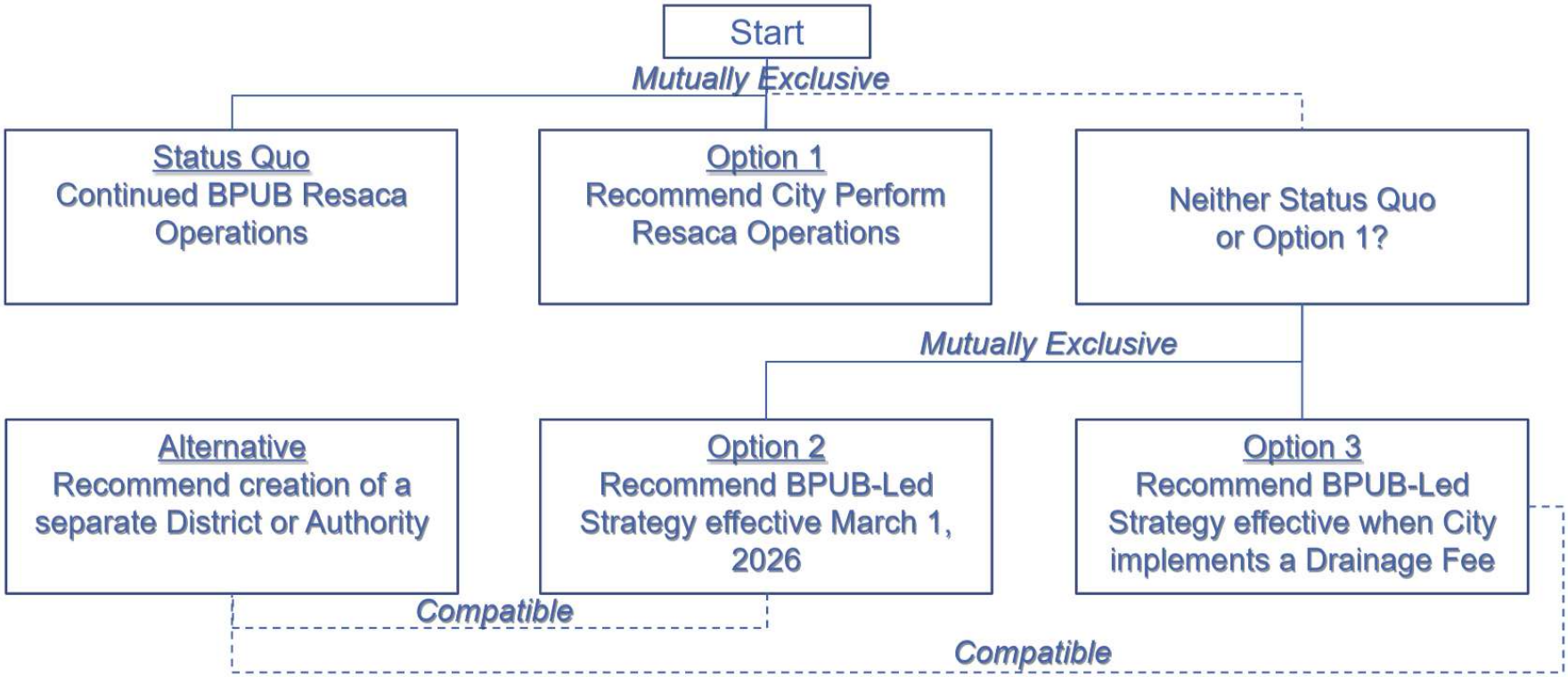

Resaca Fee and Operations

BROWNSVILLE
PUBLIC UTILITIES BOARD

POLICY DISCUSSIONS

To:	Mayor and City Commission
Through:	Alan Guard, Interim City Manager
From:	Mayra Rios, City Secretary
Date:	Tuesday, July 21, 2026
Agenda #:	Consideration and **ACTION** on **Resolution Number 2026-083C** to appoint or reappoint members to the Paseo De La Resaca Lighting and Landscaping Maintenance District Service Plan Board (PASEO). (Office of the City Secretary)

Summary:
This item requests City Commission consideration and action to reappoint the District 3 representative to the Paseo De La Resaca Lighting and Landscaping Maintenance District Service Plan Board (PASEO). The PASEO Board oversees maintenance, landscaping, lighting, and long-term service planning for the district, ensuring residents receive consistent, high-quality upkeep of common areas.
Composition: (7) members, which shall be appointed by the City Commission, with each City Commission member responsible for nominating a member to the Board position corresponding to their place, with at least three (3) members owning commercial or residential property within the district being appointed by the Mayor, At-Large A, and At-Large B.

Project Scope and Analysis:

Funding:

Source:
Amount:
Local Contribution if Applicable:

Recommendation:
Board and commission appointments are solely at City Commission's discretion.

Commission Pillar:
Governance

Attachments:

1. 07.21.2026_PASEO Board Template
2. PASEO RESOLUTION NUMBER 2026.083C_
3. PASEO Attendance_07.21.2026

Resolution Number: 2026-083C Borad Liaison:	Name of the Board or Commission: Paseo De La Resaca Lighting and Landscaping Maintenance District	City Commission Meeting Date: 07/21/2026
Composition: 7	Special Requirements:	
Highlighted in Yellow: Are interested in seeking reappointment	Vacancies: 1	

Members	Residing District	Term	Appointed on	Expires	Eligible for Re-Appt (Y/N)	Appointed by	Serving on Other City Boards
Oscar Lozano			4/1/2025	6/30/2027		Mayor	
Nancy Dimas			4/18/2025	6/30/2027		At-Large "A"	
Alberto Robledo			06/02/2026	6/30/2028		At-Large "B"	
Favio Balladares			5/6/2025	6/30/2027		District 1	
Commissioner Linda C. Macias			3/18/2025	6/30/2027		District 2	
VACANCY				6/30/2028		District 3	
Dino Chavez			06/16/2026	6/30/2028		District 4	

APPLICATIONS ON FILE - PROSPECTIVE BOARD MEMBERS

Applicants Name	Residing District	Application Received Date	Serving on Other City Boards	Areas of Interest
Marissa G. Fuentes	1	12.22.2025		
Yadira Zapata	1	01.14.2026		
Austin Boggess	2	06.22.2026		
Eloy Olvera	2	01.16.2026		
David De La Garza	3	12.24.2025		
Diana K. Medina	3	11.27.2025		
Jesus Gracia	3	11.22.2025		
Maria E. Ramirez Soto	3	12.22.2025		
Ruby Vasquez	4	03.10.2026		

RESOLUTION NUMBER 2026–083C

A RESOLUTION OF THE CITY OF BROWNSVILLE APPOINTING MEMBERS TO THE BROWNSVILLE PASEO DE LA RESACA LANDSCAPING AND LIGHTING MAINTENANCE DISTRICT BOARD.

WHEREAS, the Paseo De La Resaca Landscaping and Lighting Maintenance District was created in conformance with Chapter 372 of the Texas Local Government Code, and was adopted by Resolution on September 24, 1996, as amended by Resolution on November 17, 1998, Resolution Number 2001-087 on December 11, 2001, and amended again by Resolution Number 2025–035 on March 18, 2025; and

WHEREAS, the Paseo De La Resaca Landscaping and Lighting Maintenance District Board shall be to improve landscaping, lighting, and establish or improve parks and/or park life facilities; and

WHEREAS, the Paseo De La Resaca Landscaping and Lightning Maintenance District Board are composed of seven (7) members which shall be appointed by the City Commission, with each City Commission member responsible for nominating a member to the Board position corresponding to their place, with at least three (3) members owning commercial or residential property within the district being appointed by the Mayor, At-Large A, and At-Large B. Each Board member shall serve without compensation.

NOW, THEREFORE, BE IT RESOLVED BY THE CITY COMMISSION OF THE CITY OF BROWNSVILLE, TEXAS, that the following individual(s) are appointed to serve on the Paseo De La Resaca Landscaping and Lighting Maintenance District Board and shall serve without compensation.

NAME	APPOINTED BY	TERM ENDING
	District 3	06/30/2028

PASSED and **APPROVED** on this 21st day of July 2026.

City of Brownsville

_____

John Cowen, Jr.
Mayor

ATTEST:

_____

Mayra Rios
City Secretary

Paseo De La Resaca Lightning and Landscaping Maintenance District Service Plan Board (PASEO)

PRESENT MEMBERS	TERM:	APPOINTED DATE:	SWORN IN DATE	TERM EXPIRES:	APPOINTED BY:
Oscar Lozano	1	4/1/2025	4/3/2025	6/30/2027	Mayor
Nancy Dimas	1	4/18/2025	4/23/2025	6/30/2027	At Large "A"
Alberto Robledo	1	6/2/2026	8/1/2025	6/30/2028	At Large "B"
Favio Balladares	1	5/6/2025	6/4/2025	6/30/2027	District 1
Commissioner Linda C. Macias	1	3/18/2025	4/23/2025	6/30/2027	District 2
VACANCY	1			6/30/2028	District 3
Dino Chavez	1	6/16/2026	3/27/2025	6/30/2028	District 4

Board Liaison:
Blanca Gonzalez

Attendance Record for 12 Month Period

Member Name	Jun-26	Member Name	Jul-26	Aug-26	Sep-26	Oct-26	Nov-26	Dec-26	Jan-27	Feb-27	Mar-27	Apr-27	May-27	Jun-27
Oscar Lozano	Absent	Oscar Lozano												
Nancy Dimas	Absent	Nancy Dimas												
Stephanie Tovar	PRESENT	Alberto Robledo												
Favio Balladares	Absent	Favio Balladares												
Commissioner Linda C. Macias	PRESENT	Commissioner Linda C. Macias												
Alberto Robledo	PRESENT													
Dino Chavez	PRESENT	Dino Chavez												

To:	Mayor and City Commission
Through:	Alan Guard, Interim City Manager
From:	Bernize Escobedo, Administrative Assistant
Date:	Tuesday, July 21, 2026
Agenda #:	Consideration and **ACTION** on **Resolution Number 2026-100** to appoint or reappoint members to the Transit Advisory Committee (TAC). (Brownsville Metro Department)

Summary:
This item seeks City Commission consideration and action to fill membership seats on the Transit Advisory Committee (TAC), including addressing a current vacancy in District 2 resulting from a recently submitted resignation. The TAC provides guidance to Brownsville Metro on transit operations, planning, public engagement, and policy recommendations.

Project Scope and Analysis:

Funding:

Source:
Amount:
Local Contribution if Applicable:

Recommendation:
Board and commission appointments are solely at City Commission's discretion.

Commission Pillar:
Governance

Attachments:
1. TAC Resolution 2026-100_
2. TAC BOARD ATTENDANCE JULY 21 2026
3. TAC Board Template_07.21.2026

RESOLUTION NUMBER 2026-100

A RESOLUTION OF THE CITY OF BROWNSVILLE APPOINTING MEMBERS TO THE TRANSIT ADVISORY COMMITTEE.

WHEREAS, The Transit Advisory Committee was created in 1991 and amended by the By Laws accepted January 10, 2003, and further amended by Resolution Number 2006-039 on June 06, 2006; and

WHEREAS, the Transit Advisory Committee shall monitor the performance of Brownsville Metro quality statistical reports, reviews requested and proposed service, policy and procedure changes to assure that user and institutional needs have been addressed;

To provide advice and guidance to the Brownsville City Commission through staff on the development, implementation and operation of the Paratransit and Fixed Route Services consistent with all State and Federal Rules and Regulations, and to further:

1. Monitor the performance of Brownsville Metro quality statistical reports.
2. Monitor users through a statistical report of service productions for Paratransit and Fixed Route operations in order to determine deterioration due to use or abuse.
3. Review requested and proposed service, policy and procedure changes to assure that user and institutional needs have been addressed.
4. Review individual complaints, incidents and/or suggestions as needed to determine applicability to policies and procedures.
5. Provide support to staff on enforcing policies, procedures and practices; and

WHEREAS, the Transit Advisory Committee is composed of seven (7) members.

WHEREAS, the Transit Advisory Committee has (7) members that need to be appointed or reappointed.

NOW, THEREFORE, BE IT RESOLVED BY THE CITY COMMISSION OF THE CITY OF BROWNSVILLE, TEXAS, THAT THE FOLLOWING INDIVIDUALS ARE APPOINTED OR RE-APPOINTED TO SERVE AN EXPIRED OR UN-EXPIRED TERM ON THE TRANSIT ADVISORY COMMITTEE.

NAME	APPOINTTED BY	TERM ENDING
	District 2	12/31/2027

PASSED and **APPROVED** on this 21st day of July 2026.

City of Brownsville

_____

John Cowen, Jr.
Mayor

ATTEST:

_____

Mayra A. Rios
City Secretary

TRANSIT ADVISORY COMMITTEE (TAC)

Member Name	Term	Appointed date:	Term expires:	Appointed by:
Cecilia A Gomez	1st	11/4/2025	12/31/2027	Mayor
Graham Sevier	2nd	11/4/2025	12/31/2027	At Large "A"
Christina Villarreal	2nd	11/18/2025	12/31/2026	At Large "B"
Sandra G Mitchell	1st	11/18/2025	12/31/2027	District 1
VACANCY	1st		12/31/2027	District 2
Sergio Zarate	1st	11/4/2025	12/31/2026	District 3
Gilbert Rodriguez	1st	11/18/2025	12/31/2026	District 4

Board Liaison:
Bernize Escobedo

Attendance Record for 12 Month Period - 2026 - 2027

Member Name	6/17/2026	7/15/2026	8/19/2026	9/16/2026	10/14/2026	######	12/16/2026	1/20/2027	2/17/2027	3/17/2027	4/21/2027	5/19/2027	6/16/2027
Cecilia Gomez	ABSENT												
Graham Sevier	ABSENT												
Christina Villarreal	PRESENT												
Sandra Gomez Mitchell	ABSENT												
Eric Kennedy	ABSENT												
Sergio Zarate	PRESENT												
Gilberto Rodriguez	PRESENT												

Resolution Number: 2026-100	Name of the Board or Commission: TRANSIT ADVISORY COMMITTEE (TAC)	City Commission Meeting Date: July 21, 2026
Composition: 7 members	Special Requirements:	
Highlighted in Yellow: Are interested in seeking reappointment	Vacancies: 1	

Members	Residing District	Term	Appointed on	Expires	Appointed by	Serving on Other City Boards
Cecilia A Gomez	**3**	1st	11/4/2025	12/31/2027	Mayor	
Graham Sevier	**3**	2nd	11/4/2025	12/31/2027	At-Large "A"	
Christina Villarreal	**1**	2nd	11/18/2025	12/31/2026	At-Large "B"	
Sandra G Mitchell		1st	11/18/2025	12/31/2027	District 1	
VACANCY		1st		12/31/2027	District 2	
Sergio Zarate	**2**	1st	11/4/2025	12/31/2026	District 3	
Gilbert Rodriguez	**4**	1st	11/18/2025	12/31/2026	District 4	

APPLICATIONS ON FILE - PROSPECTIVE BOARD MEMBERS

Applicants Name	Residing District	Application Received Date	Serving on Other City Boards	Areas of Interest
Oscar Olvera	1	12.28.2025	N/A	
Giovanni Hernandez	2	03.25.2026	N/A	
Juliana Diaz	2	11.10.2025	N/A	
Karla Cantu	2	09.24.2025	N/A	
Analize M. Velazquez	3	11.10.2025	N/A	
Elizabeth Dierlam	4	07.07.2026	N/A	
Jordan C. Tarango	4	12.09.2025	N/A	
Maryela A. Gomez	4	07.17.2026	N/A	
Juan Moya	Outside City Limits	09.30.2025	N/A	
Melissa Marcelloni	Outside City Limits	09.25.2025	N/A	

To:	Mayor and City Commission
Through:	Alan Guard, Interim City Manager
From:	Will Trevino, City Attorney
Date:	Tuesday, July 21, 2026
Agenda #:	Public Hearing and **ACTION**, if any, on **FIRST READING** on **Ordinance Number 2026-1814,** amending Chapter 2, Administration, Article II, City Commission, Section 2-26, Meetings and agendas, in order to adopt rules and procedures for executive session, including preserving confidentiality of topics discussed in executive session. (Office of the City Attorney/ City Manager's Office)

Summary:

Project Scope and Analysis:

Funding:

Source: Not Applicable

Amount:

Local Contribution if Applicable:

Recommendation:
Staff recommends adoption.

Commission Pillar:
Governance

Attachments:
1. Ordinance re Executive Session v1

CITY OF BROWNSVILLE
ORDINANCE NO. 2026-1814

AN ORDINANCE OF THE CITY COMMISSION OF THE CITY OF BROWNSVILLE, TEXAS, AMENDING CHAPTER 2, "ADMINISTRATION", ARTICLE II, "CITY COMMISSION", SECTION 2-26, "MEETINGS AND AGENDAS", TO ADOPT RULES AND PROCEDURES FOR EXECUTIVE SESSION, INCLUDING PRESERVING CONFIDENTIALITY OF TOPICS DISCUSSED IN EXECUTIVE SESSION; PROVIDING SAVINGS, REPEALING, AND SEVERABILITY CLAUSES; AND PROVIDING AN EFFECTIVE DATE.

WHEREAS, the City of Brownsville, Texas (the "City") is a Home Rule Municipality acting under its Charter adopted by the electorate pursuant to Article XI, Section 5 of the Texas Constitution and Chapter 9 of the Texas Local Government Code; and

WHEREAS, the City is authorized by Texas Local Government Code §51.001 to adopt or amend any ordinance that is for the good government, peace, or order of the municipality or for the trade and commerce of the municipality; and

WHEREAS, the City Commission of the City of Brownsville, Texas (the "City Commission") adopted Chapter 2, "Administration", Article II, "City Commission", Section 2-26, "Meetings and Agendas", of the City Code of Ordinances for the public welfare and input of the citizens of the City for its proper governance, and in support thereof, the orderly and proper conduct of City Commission meetings; and

WHEREAS, the public expects the highest standards of professional conduct from Commission Members elected to the City Commission; and

WHEREAS, the Mayor and Commission Members ("Commission Members") represent the City and are entrusted with upholding local, state, and federal laws and must observe a high standard of professional conduct in the course of their official duties and faithfully fulfill the responsibilities of their offices, regardless of their personal interests; and

WHEREAS, Commission Members shall respect the decision-making process and the decisions of the City Commission, even if they disagree with such decisions, such that respect for the decision-making processes of the City Commission is fostered; and

WHEREAS, City Ordinances include certain provisions related to the procedures and conduct of business by boards, committees, and commissions; and

WHEREAS, the City Commission has reviewed the existing provisions and has determined that it is in the best interest of the citizens of Brownsville for there to be a broader range of specificity in the manner by which the City Commission conducts itself and its business; and

WHEREAS, state law allows for the City Commission to adopt rules that govern how it conducts business; and

WHEREAS, the City Commission finds that the amendments herein are an appropriate exercise of the City's authority as a home rule municipality under Texas law, and that the benefits of this ordinance will enhance public engagement and decorum to ensure fairness, respect, and compliance with the Texas Open Meetings Act; and

WHEREAS, the City Commission finds, determines, and declares that the meeting at which this Ordinance is adopted was open to the public and public notice of the time, place, and subject matter of the public business to be considered at such meeting, including this Ordinance, was given as required by Chapter 551 of the Texas Government Code; and

WHEREAS, a public hearing was held at the July 21, 2026 City Commission meeting, where the public was given an opportunity to speak on these regulations; and

WHEREAS, this ordinance is a narrowly tailored remedy to address the compelling government interests of protecting the public health and safety, and for the good governance of the City; and

WHEREAS, the City Commission now deems it necessary, expedient, and in the best interest of the City, and to promote good governance, to adopt the below revisions and further finds that the following are reasonable time, place, and manner regulations.

NOW, THEREFORE, BE IT ORDAINED BY THE CITY COMMISSION OF THE CITY OF BROWNSVILLE, TEXAS:

Section 1. Incorporation of Premises. The above and foregoing premises are true and correct and are incorporated herein and made a part hereof for all purposes as the legislative findings of the City Commission.

Section 2. Amendments. Chapter 2, "Administration," Article II, "City Commission", Section 2-26, "Meetings and agendas" of the Code of Ordinances, is hereby amended to read as follows (with deleted language shown with ~~strikethrough~~ and the added language as underlined):

PART II - CODE OF ORDINANCES
Chapter 2 - ADMINISTRATION
ARTICLE II. CITY COMMISSION

Sec. 2-26. Meetings and agendas.

(a) Definitions.

Agenda packets means supporting information for agenda items.

Closed or executive session means a meeting to which the public does not have access. These sessions are only permitted for the purpose of discussing matters enumerated in Chapter 551, Open Meetings Act of the Texas Government Code.

Regular sessions means business meetings held on the first and third Tuesday of each month.

Routine business means items of normal city business, including: canvassing an election, authorizing a contract, zoning which has previously been discussed at a public hearing, approval of minutes, deeds, easements, final reading and adoption of ordinances, auditor's reports as to cash count,

standard subdivision agreements, calls for bids, reports of administrative actions and proposals, leases, and agreements previously approved in principle.

Special sessions means business meetings, which are not regular sessions.

Work sessions means meetings called for the exchange of information only.

…

(g) *Use of cameras and recorders*. Cameras, including television and motion picture cameras, electronic sound recording devices, and any other mechanical, electrical, or electronic recording devices, may be used in a reasonable manner in the public section of the commission chamber.

(e) Executive Session.

(1) The City Commission may convene into an executive session as stated on a posted agenda during a regular or special meeting. However, before said session begins, the city secretary shall announce that the executive session is commencing and identify the section or sections of the Open Meetings Act under which the closed meeting is held. The order in which an executive session may appear on the agenda is subject to the discretion of the City Commission.

(2) A certified agenda of the meeting will be created by the presiding officer or his or her designee, sealed and permanently kept in accordance with state law, subject to opening by court order. The certified agenda must include (1) a statement of the subject matter of each deliberation, (2) a record of any further action taken, and (3) an announcement by the presiding officer at the beginning and the end of the closed session indicating the time and date. The presiding officer will certify all certified agendas in accordance with state law.

(3) Commission Members may not use or possess personal computing devices, mobile devices, e-messaging, or social media in a closed Executive Session.

(4) No voting or action shall be taken by the City Commission during an executive session. Action on executive session items must be taken during the public/open session of the Commission. Action may include the taking of no action at all.

(5) Appropriate city staff are permitted in executive sessions as appropriate for the items to be discussed.

(6) No other subject other than that posted on the agenda is to be considered. Adjournment of the executive session and any vote needed shall be made during the open public meeting.

(7) For executive sessions or closed meetings, Commission Members participating remotely must take appropriate measures to ensure that audio and video communications are inaccessible to unauthorized persons to preserve confidentiality and attorney-client privilege.

(8) Disclosure of topics to be discussed shall be made to the public in accordance with the requirements of the Open Meetings Act or Public Information Act.

(9) Legal advice discussed in executive session shall remain confidential unless the City Commission votes to waive the attorney-client privilege. Except for action taken in open session, no Commission Member, staff member, or legal counsel may disclose the deliberations in executive session on matters discussed under other lawful exceptions under the Open Meetings Act.

(10) Commission Members, staff members, or legal counsel shall respect the confidentiality of information concerning City property, personnel, or proceedings of the City. They shall neither disclose confidential information without proper legal authorization nor use such information to

advance their personal interests. City officials shall keep all matters discussed in executive session confidential. Any City official who shares any part or portion of the discussions, discourse, presentations, or information heard or presented during an executive session shall be deemed to have violated Chapter 38, Ethics Code.

Secs. 2-27—2-55. Reserved.

Section 3. City Code of Ordinance Revisions. The publisher of the City's Code of Ordinances is hereby authorized to revise the Code of Ordinances to reflect changes provided for in this Ordinance; to correct typographical errors where necessary; and to format and number paragraphs to conform to the existing City's Code of Ordinances.

Section 4. Repealing Clause. All provisions of any ordinance in conflict with this Ordinance are hereby repealed to the extent they are in conflict; but such repeal shall not abate any pending prosecution for violation of the repealed ordinance, nor shall the repeal prevent a prosecution from being commenced for any violation if occurring prior to the repeal of the ordinance. Any remaining portions of said ordinances shall remain in full force and effect.

Section 5. Severability. Should any section, subsection, sentence, clause, phrase of this Ordinance be declared unconstitutional or invalid by a court of competent jurisdiction, it is expressly provided that any and all remaining portions of this Ordinance shall remain in full force and effect. Brownsville hereby declares that it would have passed this Ordinance, and each section, subsection, sentence, clause or phrase thereof irrespective of the fact that any one or more sections, subsections, sentences, clauses and phrases be declared unconstitutional or invalid.

Section 6. Effective Date. Pursuant to the City Charter, this Ordinance shall become effective upon its second and final reading and passage, and after publication of the caption and penalty clause of this ordinance.

Section 7. Open Meetings. That it is hereby found, determined, and declared as a matter of legislative finding, that the meeting at which this Ordinance was passed was open to the public as required by law, and that public notice of the time, place and purpose of said meeting was given, all as required by Article 551.041, Texas Government Code.

INTRODUCED and PASSED at a PUBLIC HEARING and FIRST READING on the 21st day of July, 2026.

APPROVED AND PASSED at a PUBLIC HEARING and on the SECOND and FINAL READING on this the 4th day of August, 2026.

_____

John Cowen, Jr.
Mayor

ATTEST:

_____
Mayra A. Rios, TRMC
City Secretary

APPROVED AS TO FORM
AND LEGALITY:

_____
Guillermo (Will) S. Trevino
City Attorney